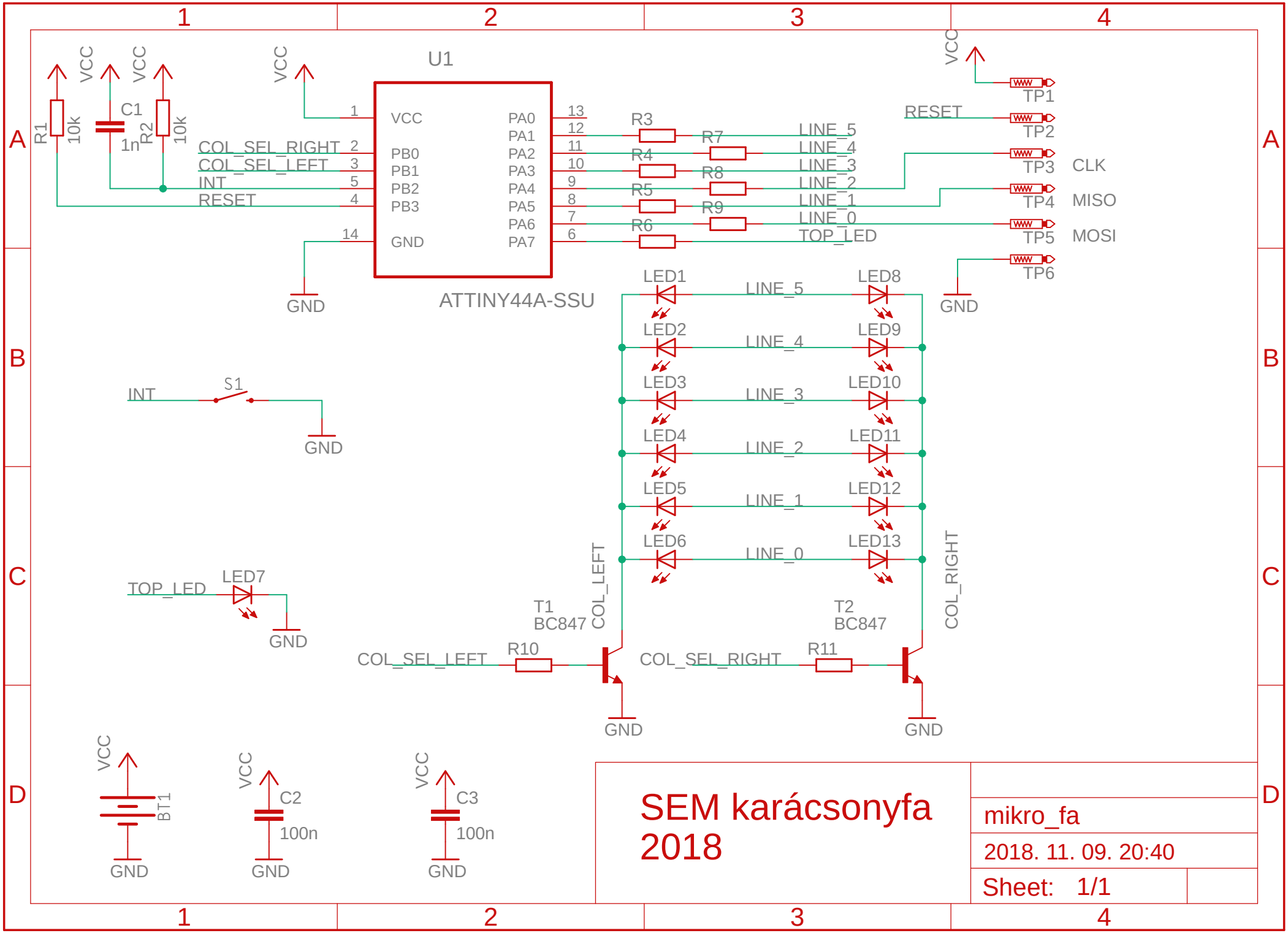
U1
ATTINY44A-SSU
VCC
PB0
PB1
PB2
PB3
GND
PA0
PA1
PA2
PA3
PA4
PA5
PA6
PA7
COL_SEL_RIGHT
COL_SEL_LEFT
INT
RESET
R1 10k
C1 1n
R2 10k
R3
R4
R5
R6
R7
R8
R9
LINE_5
LINE_4
LINE_3
LINE_2
LINE_1
LINE_0
TOP_LED
TP1
TP2
TP3
TP4
TP5
TP6
CLK
MISO
MOSI
LED1
LED2
LED3
LED4
LED5
LED6
LED7
LED8
LED9
LED10
LED11
LED12
LED13
S1
T1 BC847
T2 BC847
R10
R11
COL_LEFT
COL_RIGHT
BT1
C2 100n
C3 100n
SEM karácsonyfa 2018
mikro_fa
2018. 11. 09. 20:40
Sheet: 1/1