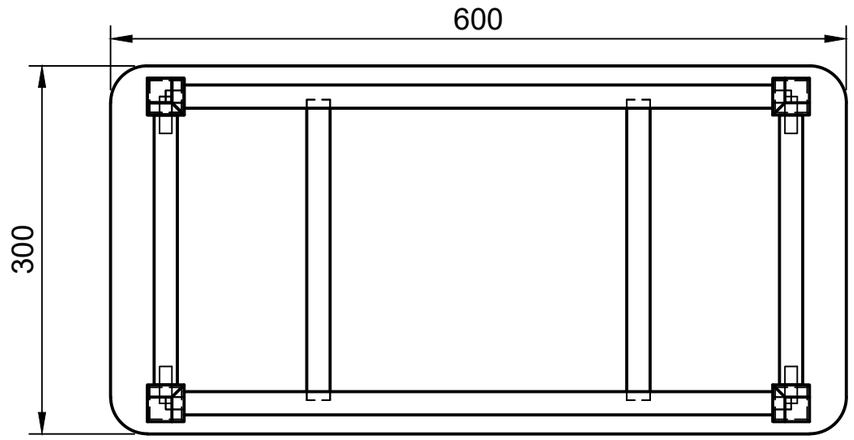

Top

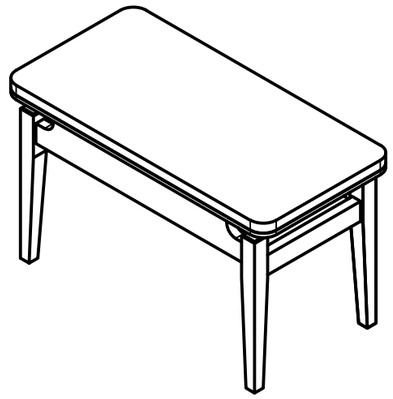

Isometric (Not to Scale)

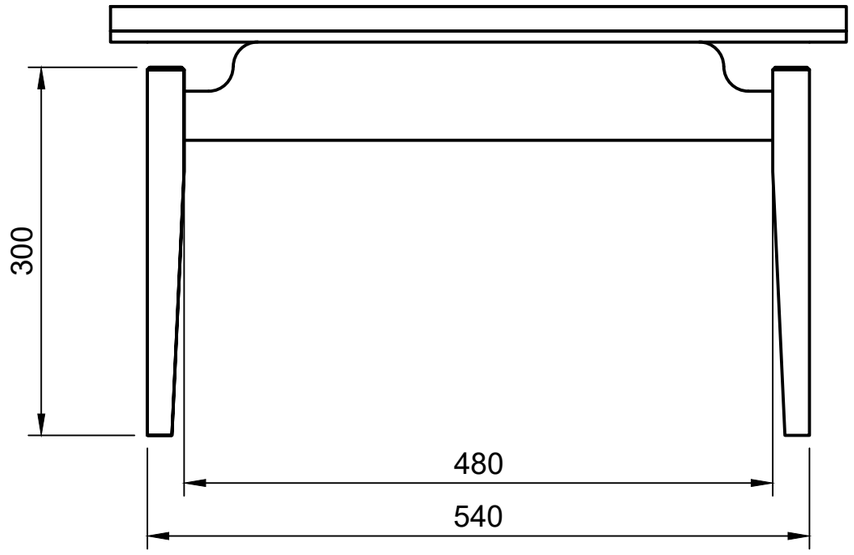

Front

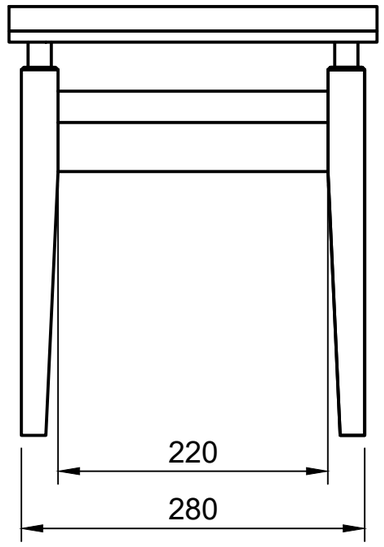

Side

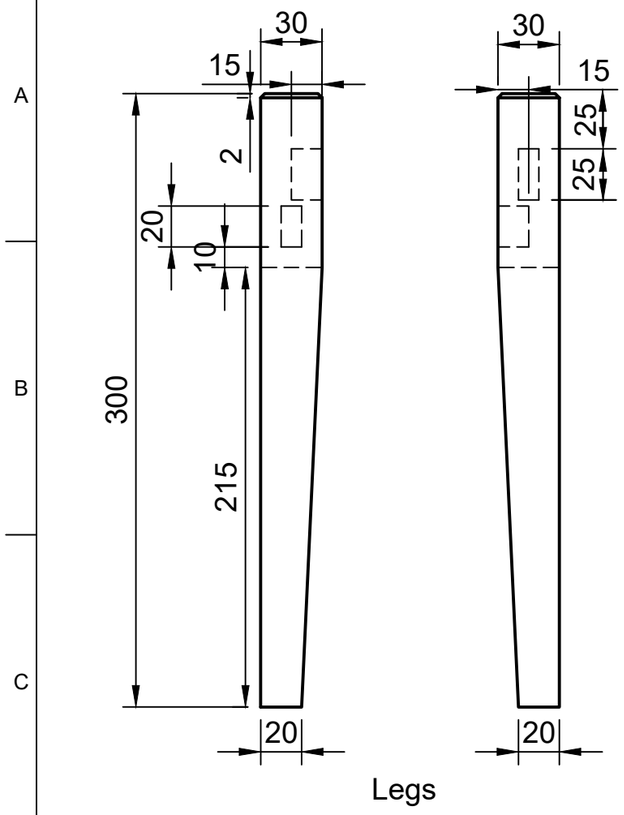

Legs

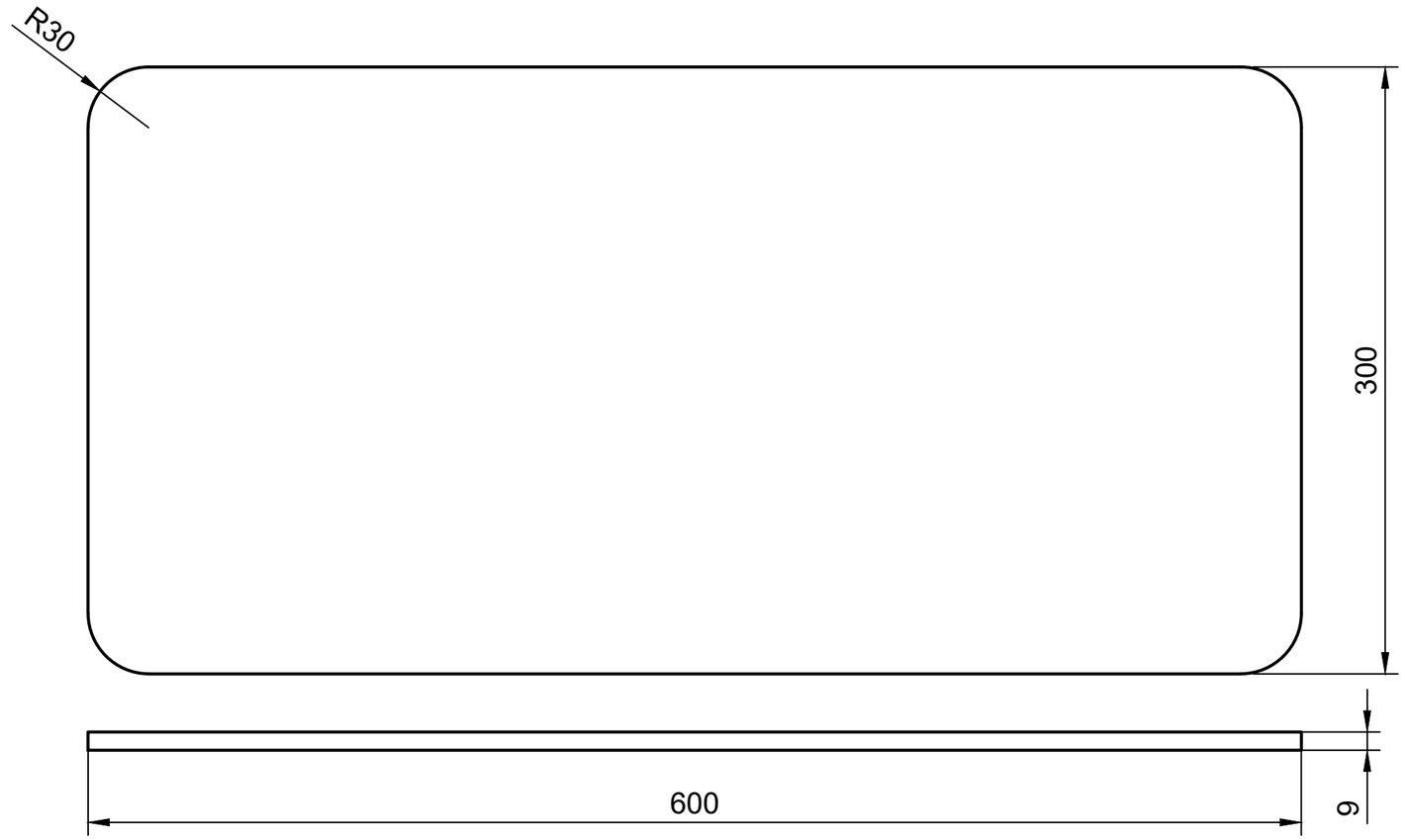

Top

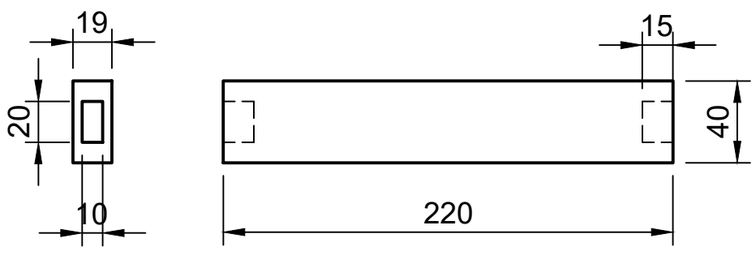

Short Rail

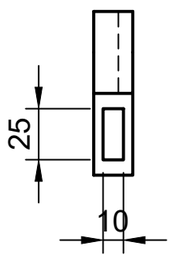

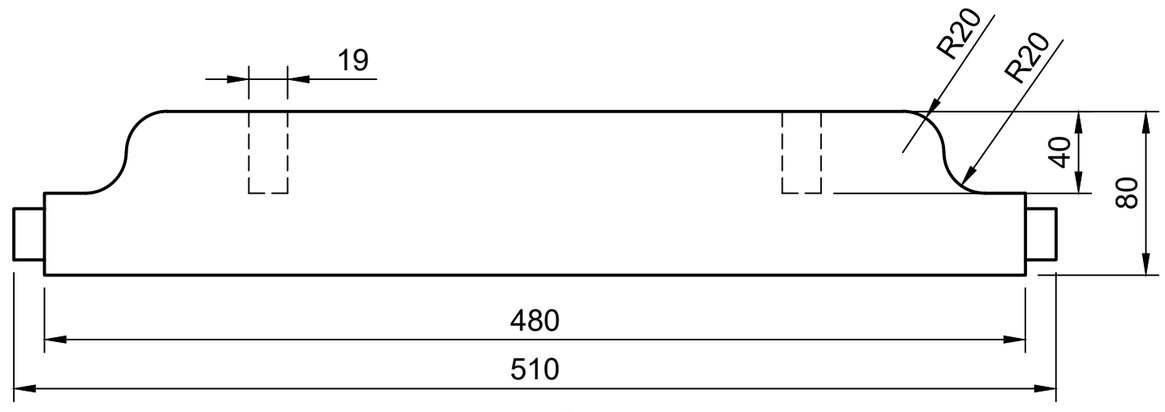

Long Rail

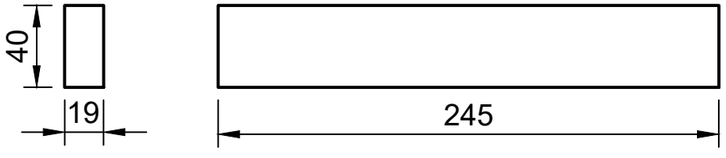

Cross Rail