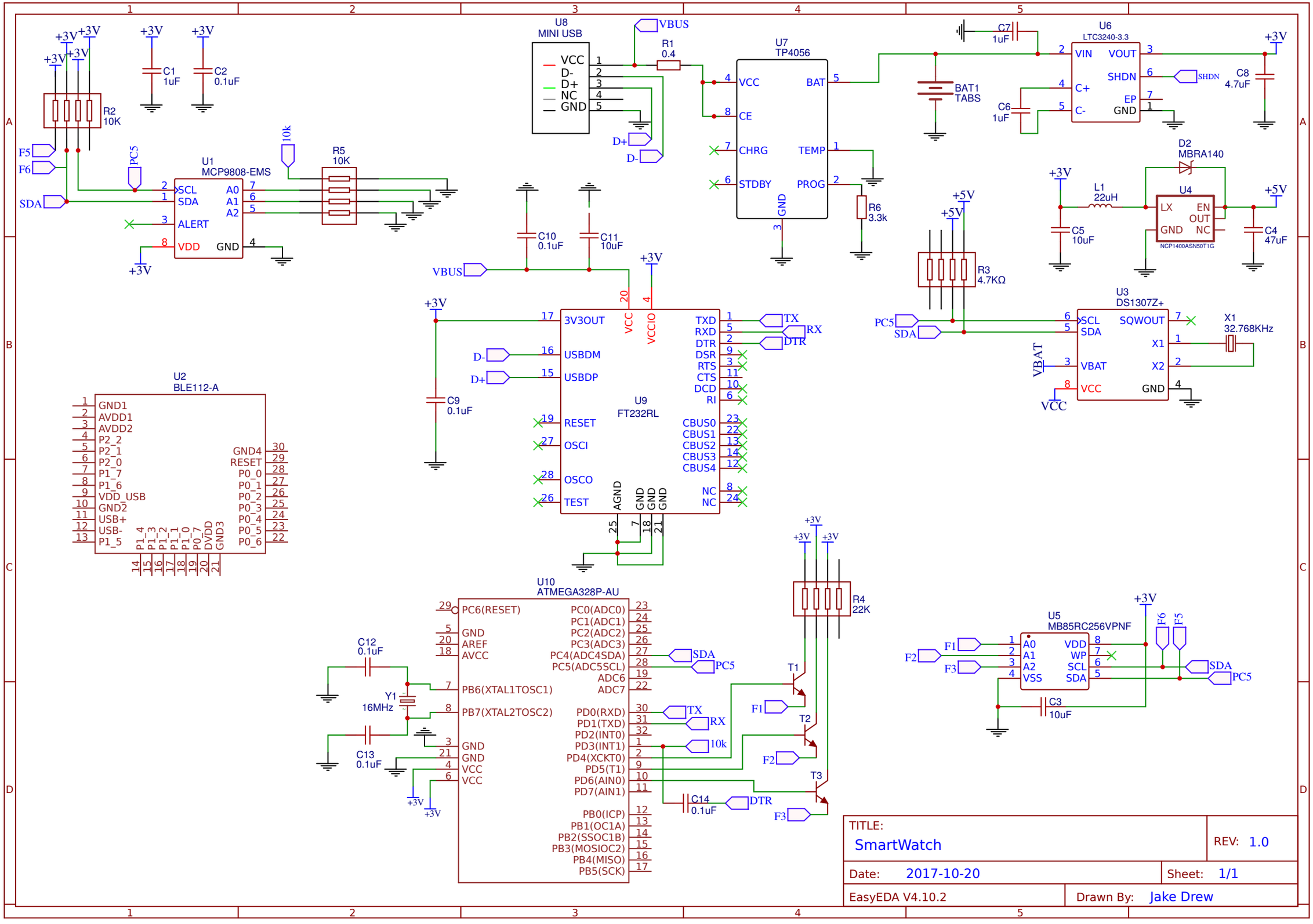
U8
MINI USB
VCC
D-
D+
NC
GND
VBUS
R1
0.4
U7
TP4056
VCC
CE
CHRG
STDBY
BAT
TEMP
PROG
GND
R6
3.3k
BAT1
TABS
C7
1uF
U6
LTC3240-3.3
VIN
VOUT
SHDN
C+
C-
EP
GND
C6
1uF
C8
4.7uF
+3V
R2
10K
C1
1uF
C2
0.1uF
F5
F6
SDA
PC5
U1
MCP9808-EMS
SCL
SDA
ALERT
VDD
GND
A0
A1
A2
10k
R5
10K
C10
0.1uF
C11
10uF
VBUS
+3V
D2
MBRA140
L1
22uH
U4
LX
EN
OUT
GND
NC
NCP1400ASN50T1G
C5
10uF
C4
47uF
+5V
R3
4.7KΩ
U3
DS1307Z+
SCL
SDA
VBAT
VCC
SQWOUT
X1
X2
GND
X1
32.768KHz
VBAT
VCC
U2
BLE112-A
GND1
AVDD1
AVDD2
P2_2
P2_1
P2_0
P1_7
P1_6
VDD_USB
GND2
USB+
USB-
P1_5
GND4
RESET
P0_0
P0_1
P0_2
P0_3
P0_4
P0_5
P0_6
P1_4
P1_3
P1_2
P1_1
P1_0
P0_7
DVDD
GND3
U9
FT232RL
3V3OUT
USBDM
USBDP
RESET
OSCI
OSCO
TEST
VCC
VCCIO
AGND
GND
TXD
RXD
DTR
DSR
RTS
CTS
DCD
RI
CBUS0
CBUS1
CBUS2
CBUS3
CBUS4
NC
TX
RX
DTR
D-
D+
C9
0.1uF
U10
ATMEGA328P-AU
PC6(RESET)
GND
AREF
AVCC
PB6(XTAL1TOSC1)
PB7(XTAL2TOSC2)
PC0(ADC0)
PC1(ADC1)
PC2(ADC2)
PC3(ADC3)
PC4(ADC4SDA)
PC5(ADC5SCL)
ADC6
ADC7
PD0(RXD)
PD1(TXD)
PD2(INT0)
PD3(INT1)
PD4(XCKT0)
PD5(T1)
PD6(AIN0)
PD7(AIN1)
PB0(ICP)
PB1(OC1A)
PB2(SSOC1B)
PB3(MOSIOC2)
PB4(MISO)
PB5(SCK)
VCC
SDA
PC5
TX
RX
10k
DTR
C12
0.1uF
Y1
16MHz
C13
0.1uF
C14
0.1uF
R4
22K
T1
T2
T3
F1
F2
F3
U5
MB85RC256VPNF
A0
A1
A2
VSS
VDD
WP
SCL
SDA
C3
10uF
TITLE:
SmartWatch
REV: 1.0
Date: 2017-10-20
Sheet: 1/1
EasyEDA V4.10.2
Drawn By: Jake Drew