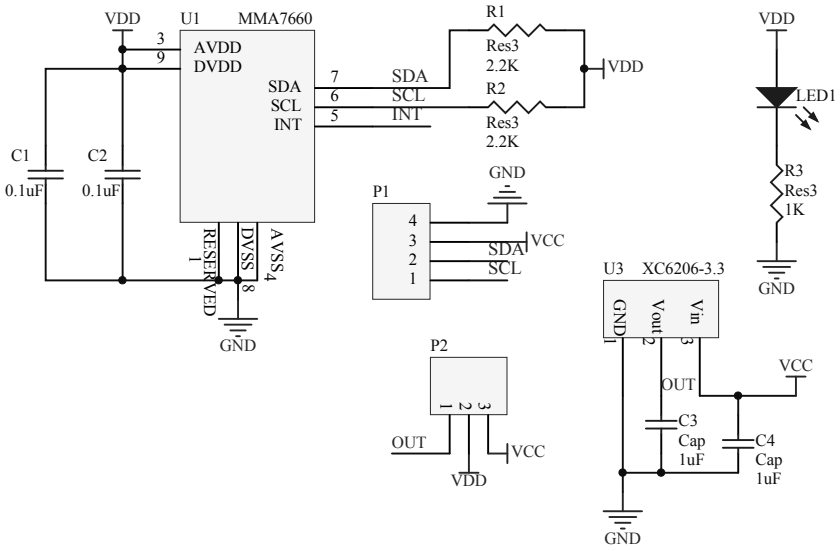
VDD
U1
MMA7660
AVDD
DVDD
SDA
SCL
INT
RESERVED
DVSS
AVSS
C1
0.1uF
C2
0.1uF
GND
R1
Res3
2.2K
R2
Res3
2.2K
VDD
P1
VCC
P2
OUT
VCC
VDD
LED1
R3
Res3
1K
U3
XC6206-3.3
GND
Vout
Vin
C3
Cap
1uF
C4
Cap
1uF

33.53185 (mm)
28.956 (mm)
21.844 (mm)
26.416 (mm)
MMA7660_module
X
Y
Z
GND
VCC
SDA
SCL
5V
3V3
NetP5
NetP3
NetP4
NetP6