Members Logo:

Members:
Fernando Azuaje
Tanav Gosala
Cameron Jones
Sasvath Raajkumar

Phase 1

Phase 1:

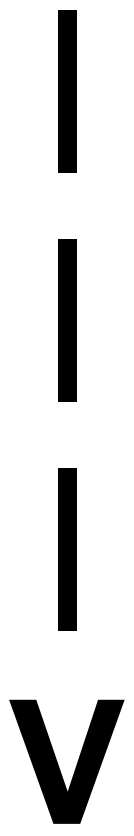

Folder

Folder:

Unit 4 Project

Prob. Statement

Problem Statement:

Water bottles made of plastic are one of the main ways people hydrate themselves, even though they cause pollution, which is a serious environmental risk. Greenpeace, a trusted organization that researches environmental damage and provides global solutions, states that more than 1 million plastic water bottles are bought every single minute around the world. Additionally, since many people drink several of these a day, this leads to long-term environmental damage. Not to mention that about 70% of them end up in landfills or in the ocean. FTCS's goal is to make an environmentally friendly water bottle that can be reused several times and also meets our strict criteria. Our criteria consist of being durable, lightweight, and insulated. Unlike other reusable bottles on the market, our product will be made from recyclable or biodegradable materials while still maintaining strong insulation and long-term durability. It will give customers the convenience they expect from plastic bottles but without the long-term environmental harm, making it a practical and sustainable option. Our team's solution aims to solve this problem while reducing plastic waste, lowering carbon emissions, and ensuring customer satisfaction.

Comp. Analysis

Competitor Analysis

- Competitor Analysis: Teams search for existing Competitor Products to identify strengths and weaknesses of the current solutions that may exist on the market.

Competitor Analysis: Eco-friendly water bottle companies show clear strengths by using durable and stainless steel, recycled materials, and promoting long-term reuse to reduce one-use plastic waste. Some brands, like Ocean Bottle, also support ocean plastic collection efforts. However, their weaknesses are carbon emissions from production and shipping, a higher price point that limits access, and limited recycling systems for certain components. While these companies improve sustainability compared to disposable bottles, greater transparency and affordability would strengthen current solutions.

Group Contract

Group Contract

(FTCS) Group Contract

This contract intends to hold group members accountable for conduct and responsibilities that the group feels are important to a healthy working relationship. It is important to realize that bringing the "unstated" rules of conduct and communication to the surface will help groups function more positively. This contract will be in effect throughout this class, and all group members will be responsible for maintaining compliance with this contract.

Ground Rules

1. Every team member is to treat each other with mutual respect as each member has a distinctive voice that will be respected by their group mates.
2. Any conflict within the group members should be resolved using the Conflict Resolution guidelines that will detail more about how conflicts should be resolved, and the consequences if issues persist.
3. Procrastination or avoiding work until the last minute will result in consequences listed further into the contract. Finish work as soon as possible and to the best of the members abilities.
4. Group meetings or group discussions are to be held via online or in person to take care of common issues that persist within the group or with any assignments/tasks assigned.

Expectations

1. When assigned, all work must be completed as early as possible to allow for other group members to review the work before it is submitted. Additionally, if there are any errors, the member who completed the work will need to go back and revise.
2. Any team member who is missing on a group meeting should let the team know and complete their missing work regardless. If they are missing because of an unexpected circumstance, they will be excused from their work, and somebody will pick it up for them.
3. Any team member who is struggling with their work should ask for assistance instead of avoiding or procrastinating the work to ensure that the work is completed by the deadline.
4. Every team member is to commit to the work they were assigned, and if there are any objections, they are to immediately say it and not wait to avoid any conflicts with other members and conflicts in completing the work on time.

5. Teachers will be consulted in case a team member is missing meetings on purpose, procrastinating on work, or avoiding doing the tasks they were assigned.
6. Every team member is to do the work they are assigned with high standards in mind. The work should be done to the best of their ability, both in terms of knowledge and creativity wise to submit quality work.

(examples: attendance, communication, work ethic, etc.)

Participation:

1. Every team member must participate in communication, especially in group discussions involving Zoom. No team member should miss a group meeting unless it has been discussed ahead of time.
2. Every student must come to group meetings prepared, whether it's having done readings, pulling information/quotes from the text, or anything needed to succeed.
3. There should be no personal conversations that deter the team from completing the task at hand. Additionally, all students should remain focused and use the time given to finish any work assigned.

(examples: make every team meeting, remove distractions during team meetings, come prepared, etc.)

Communication:

1. Team members should communicate to each other through the use of social media apps, such as discord, or through text messages when members are outside of school hours.
2. Team members will need to communicate with one another often and failure to do so will lead to warnings or consequences. Anything that team members should communicate should be communicated via discord or text messages as soon as possible.
3. Team members are to communicate with the group in case of an emergency or unexpected event occurs for the team to have enough time to adjust to the situation.
4. Team members are to communicate if they are unable to complete assignments or unable to attend group meetings. Failure in complying with these regulations will lead to consequences listed below.

(examples: text in advance if we will not complete an assignment on time, give advance notice if missing class, etc.)

Meetings:

1. During meetings, focus on the task at hand and do not get sidetracked/distracted.
2. Start and end the meetings on time.
3. Use at least 60 minutes of each meeting on our project

(examples: start on time and end on time, focus only on project tasks, commit to 75 minutes of project time each meeting, etc.)

Conduct:

1. Actively listen to each other when sharing.
2. Give a real, authentic effort when approaching the group time and work [Capturing Kids Hearts]
3. No 'Put-Downs' or sarcasm
4. During group meetings in school hours, everyone is to stay on task at all times.

5. Common conflicts are to be resolved through group meetings, or by giving ideas on how to fix the issue.
6. Any major decision made during the project is with everyone's vote. Nobody is allowed to make a decision alone.

(examples: stay focused, avoid distractions, come prepared, etc.)

Deadlines:

1. Complete all assignments when given as early and as best as possible.
2. Review every single assignment before submission to ensure the quality is up to standards.
3. Avoid procrastination on these assignments to ensure the best quality of work is submitted and receive approval from each team member to submit the assignment once it's been reviewed.
4. Submit all assignments before the deadline. If by any means this is not done, consequences will vary from having a group meeting, to talking to Ms. Cureton or Mr. King, to getting kicked out of the group.

(examples: finish assignments in time for group review before submitting, avoid procrastinating, etc.)

Conflict Resolution

1. Any arising issues between members of the group are to arrive at a clear solution/consensus and failure to do so will result in a vote between all members to decide what to do based on the subject matter.
2. If necessary, outside parties will be contacted if the common issues persist.
3. If everything else fails to resolve the conflict, then Mr. King or Ms. Cureton will be asked to decide what to do. They will be consulted on the subject matter and decide what to do with the group.
4. If none of these resolutions are successful in any way, then the group will be disbanded by Mr. King or Ms. Cureton and there will be a discussion on what to do with the group members.

(examples: warning, teacher involvement, team vote, holding each other accountable, giving a warning on first offenses, being diplomatic, etc.)

Semester 1 goals

1. We will get an A or higher on each assignment

(examples: get a 'B' or higher on each assignment, set the standard for the class, etc.)

Member Roles

TEAM CAPTAIN	Tanav Gosala
NOTE TAKER	Sasvath Raajkumar
SCHEDULER	Cameron Jones
PORTFOLIO LEAD	Tanav Gosala
PRESENTATION	Fernando Azuaje

Team Member Digital Signatures

Tanav Gosala:	Tanav Gosala
Cameron Jones:	Cameron Jones
Fernando Azuaje:	Fernando Azuaje
Sasvath Raajkumar:	Sasvath Raajkumar

Presentation Link: Canva

Gantt Chart

Gantt Chart

Phase 2

Phase 2:

|

|

|

V

Polling

https://docs.google.com/forms/d/1y14uuYiFXUQzybv4F9QKsTtZRuz1jEDEYrc3_Xr1fJE/edit

Competitor Products

Top plastic water bottle companies include major reusable brands like Nalgene, Contigo, CamelBak, Owala, and CamelBak, often using durable, BPA-free plastic. For disposable PET bottled water, industry leaders are Aquafina, Smartwater, VitaminWater, and Dasani. Manufacturers like Amcor and Berry Global specialize in producing plastic bottles for beverages

penta
FIJI
VOSS

Sketches

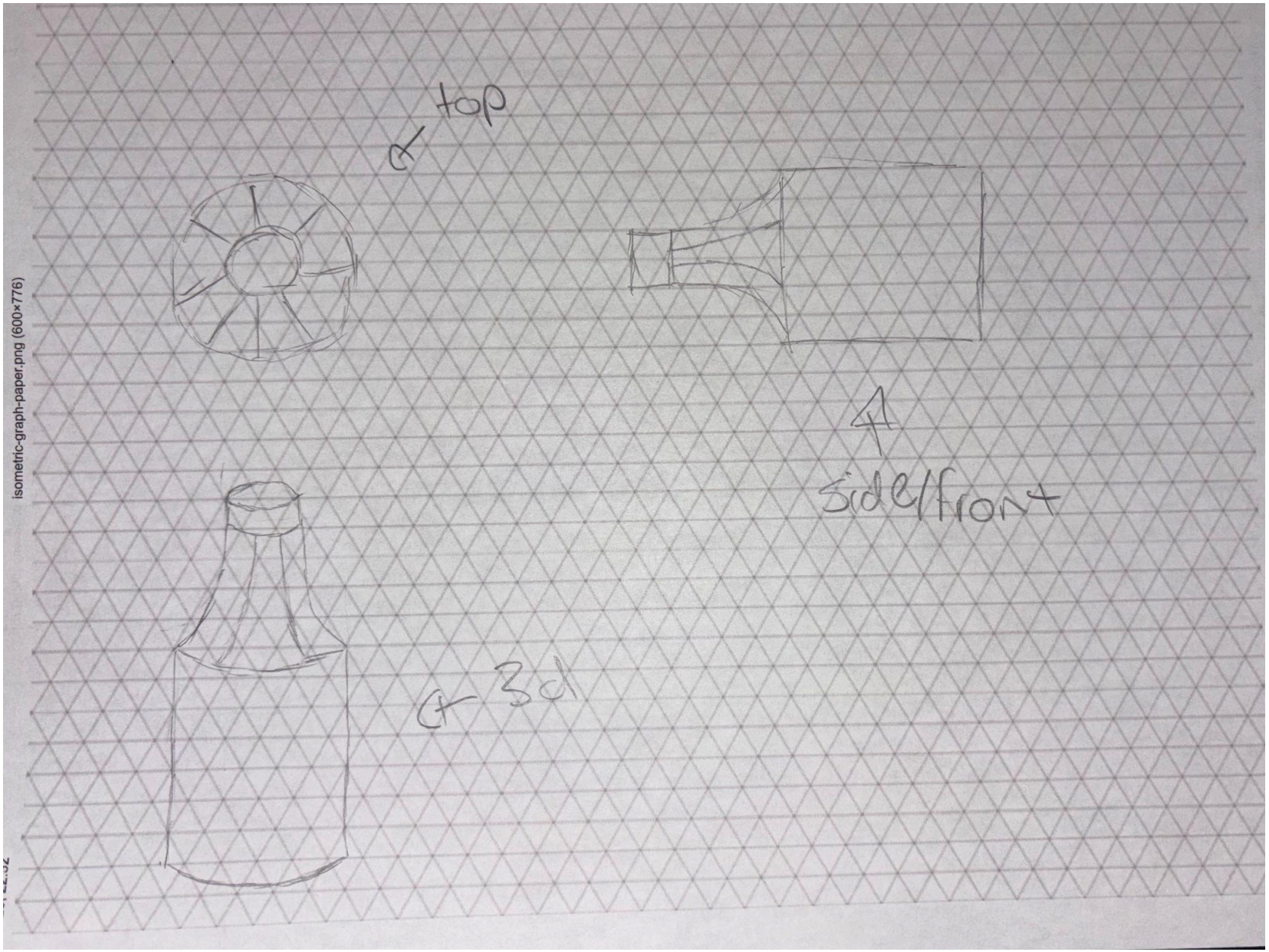

isometric-graph-paper.png (600×776)

Phase 3

Phase 3:

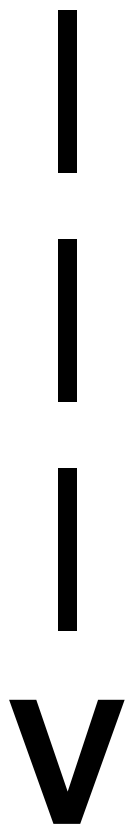

Decision Matrix

	Environmental Impact	Durability	Ease of Access	Lightweight Design	End-of-Life Disposal
Standard Stainless Steel Bottle 14	3	5	2	2	2
Recycled Plastic Reusable Bottle 17	4	2	5	4	2
FTCS Bottle 24	5	4	5	5	5

Design Matrix

Technical Sketches

Technical Sketches

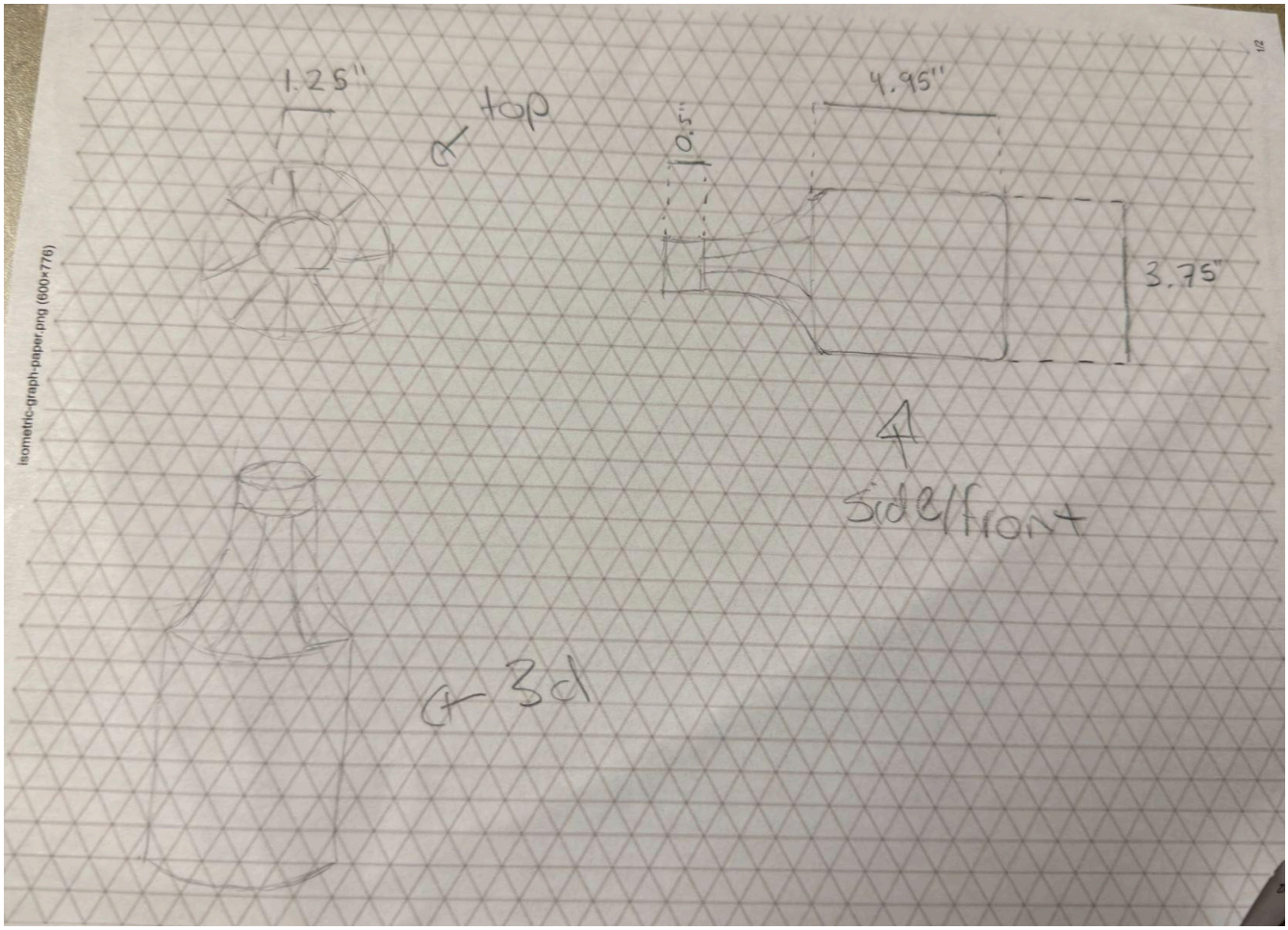

FTCS Presentation

2_FTCS.MOV

Solid presentation, given solid advice on product competitiveness and understanding our design overall.

Grade: 92%

Teacher Feedback:

- “Presentation could be put together better and we could be prepared more for it. The biggest concern is understanding why a company would adopt this product, so more clarity on that would be great.”
- “I don't love note cards. They make you look unprepared. Good job getting to the Problem Statement early and still showing all the phases. Find a better way to show your polling data visually (make it match your presentation). Show actual images of

your competitors so that we (the audience) understand the problem. The sketches and research that went along with it helped tell the story.”

Design Specifications

Design Specifications

Design Specifications

Material: The water bottle must be designed with recyclable or biodegradable materials

The water bottle material should not contain any toxic elements and must be environmentally friendly.

The water bottle must follow the industry standard for biodegradability.

Durability: The water bottle must withstand regular use without causing damage like wear.

> The water bottle's structural integrity should remain the same after 500 uses of emptying and reusing.
> The water bottle should not leak or crack during regular usage.

Weight: Our water bottle should maintain the same weight as a normal water bottle to mimic the ease of use people get from water bottles

> The weight of a single water bottle should not go over 350 grams for a 1 liter water bottle.

Size and Shape: The water bottle must universally fit in a cup holder and be designed to feel and carry comfortably.

> The water bottle's height should be around 9-10 inches to mimic the typical water bottle.
> The diameter of the water bottle should be around 3 inches to universally fit in most cup holder

Environmental impact: The water bottle must be designed to have a minimal impact on the environment.

> When producing our water bottles, the carbon footprint should be less than 0.5kg of co2 per water bottle.

After the water bottle is done with its usage, it must be 100% recyclable when throwing it away.

Leak proof: The water bottle is designed to prevent leakage during normal usage.

We will run a test on the water bottle, where it must pass the water tightness test at many different angles for 24 hours
We will also run many durability tests, like dropping and throwing, to prevent accidental leaks.

Customer convenience: Our water bottle must retain the feeling that a plastic water bottle gives to customers, the ease of access. It should also be easy to clean and fill up with water.

It must be able to go through a dishwasher
The water bottle should have a modified opening that makes it easy to fill and clean the water bottle.

Safety: The water bottle must meet all the relevant safety requirements for consumer products.

The water bottle must be BPA-free and must comply with the FDA standards for food-grade materials.

Cost: Our redesigned water bottle should be around or under the cost of normal plastic bottles at stores

The production cost must not be too expensive for customers to purchase; it should be around the ballpark or even under the prices of normal plastic water bottles.

Product Lifecycle: The water bottle should have a long life

The water bottles should be designed to last 60 days with normal daily use.

Phase 4

Phase 4:

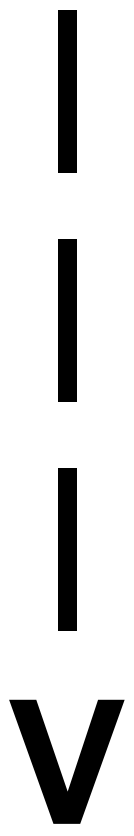

AutoCAD Water bottle

Autocad drawings
(Scale for 1st drawing is different)

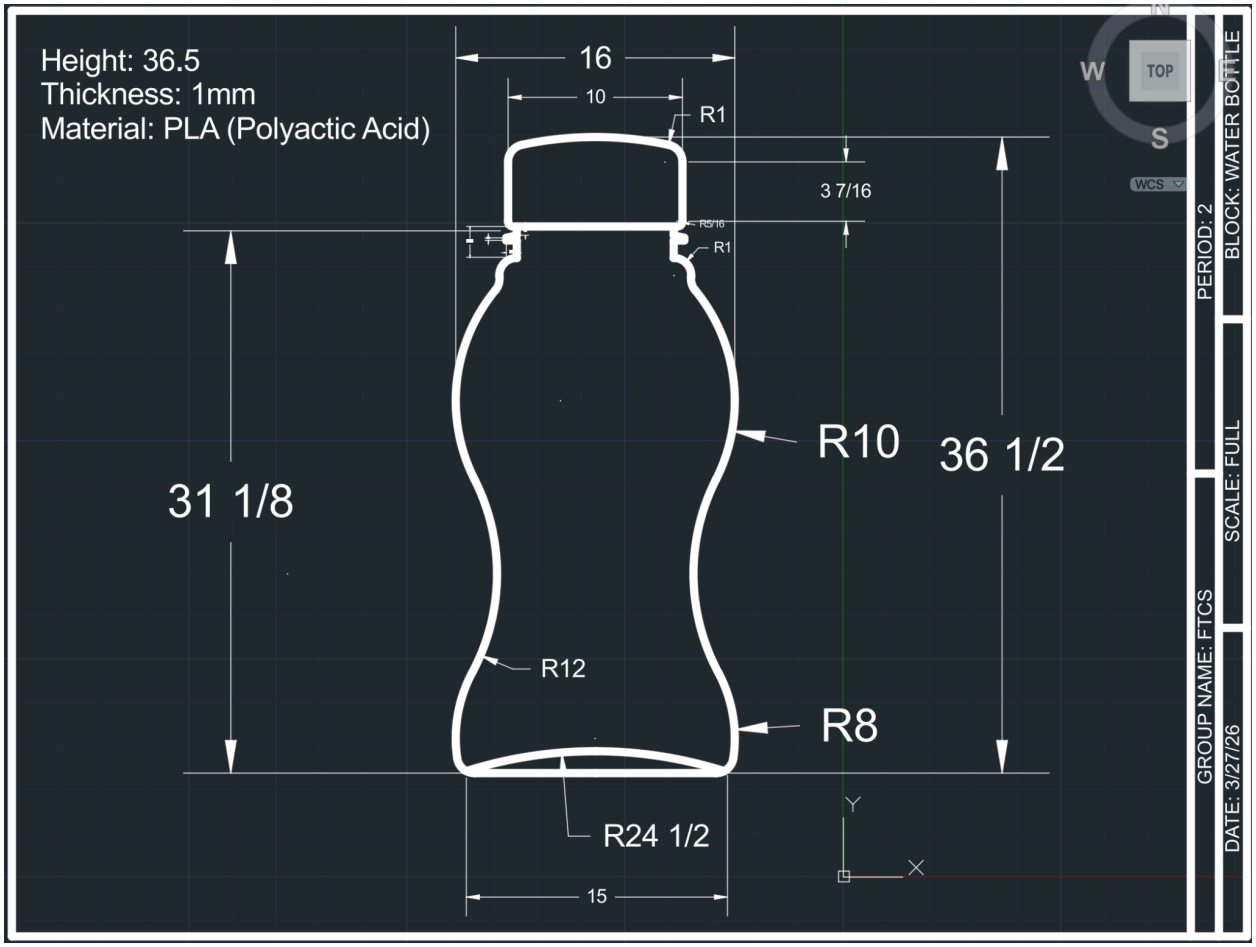

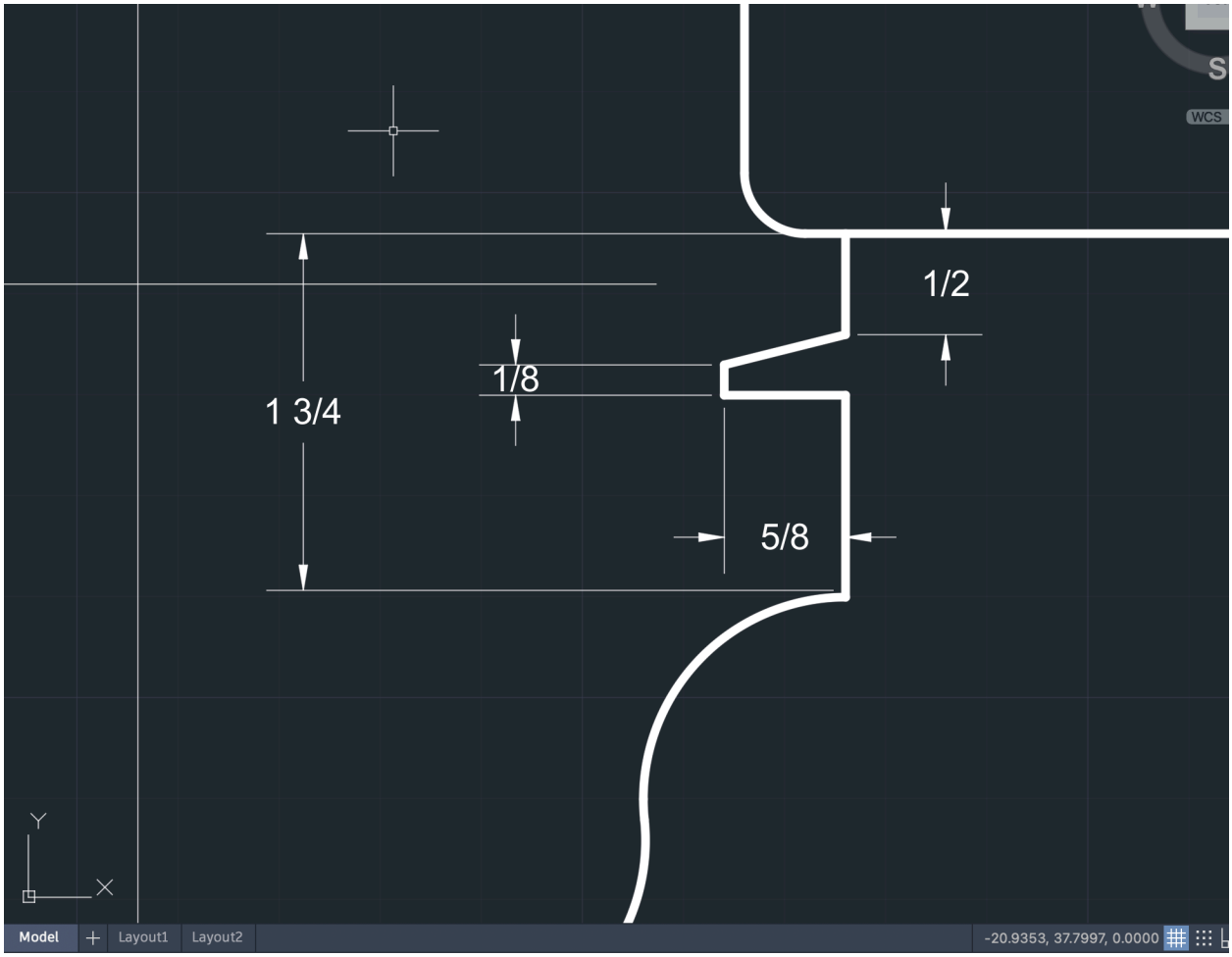
1/2
1/8
1 3/4
5/8
Y
X
Model
Layout1
Layout2
-20.9353, 37.7997, 0.0000
WCS

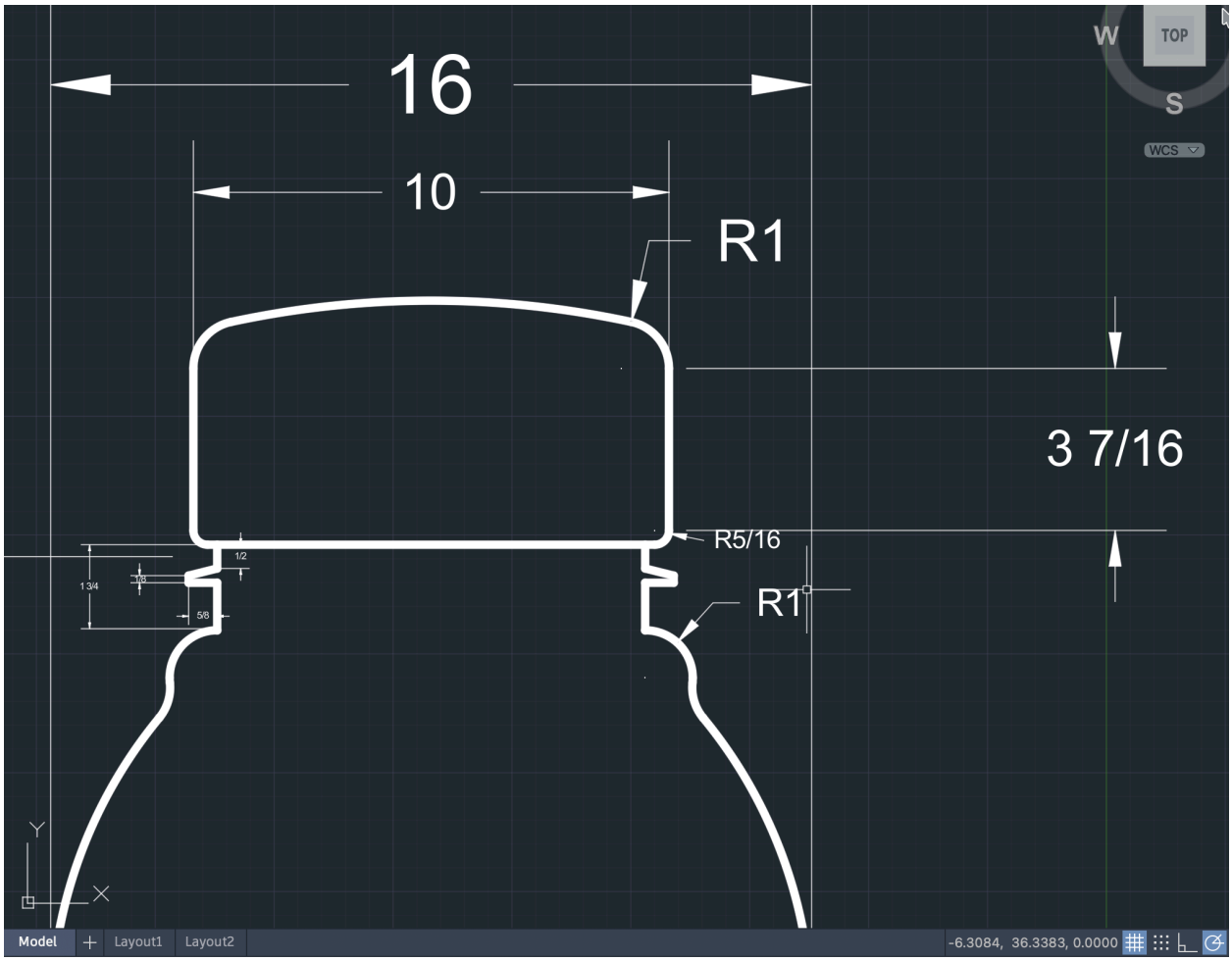
16
10
R1
3 7/16
R5/16
R1
1/2
1 3/4
1/8
5/8
W
TOP
S
WCS
Y
X
Model
Layout1
Layout2
-6.3084, 36.3383, 0.0000

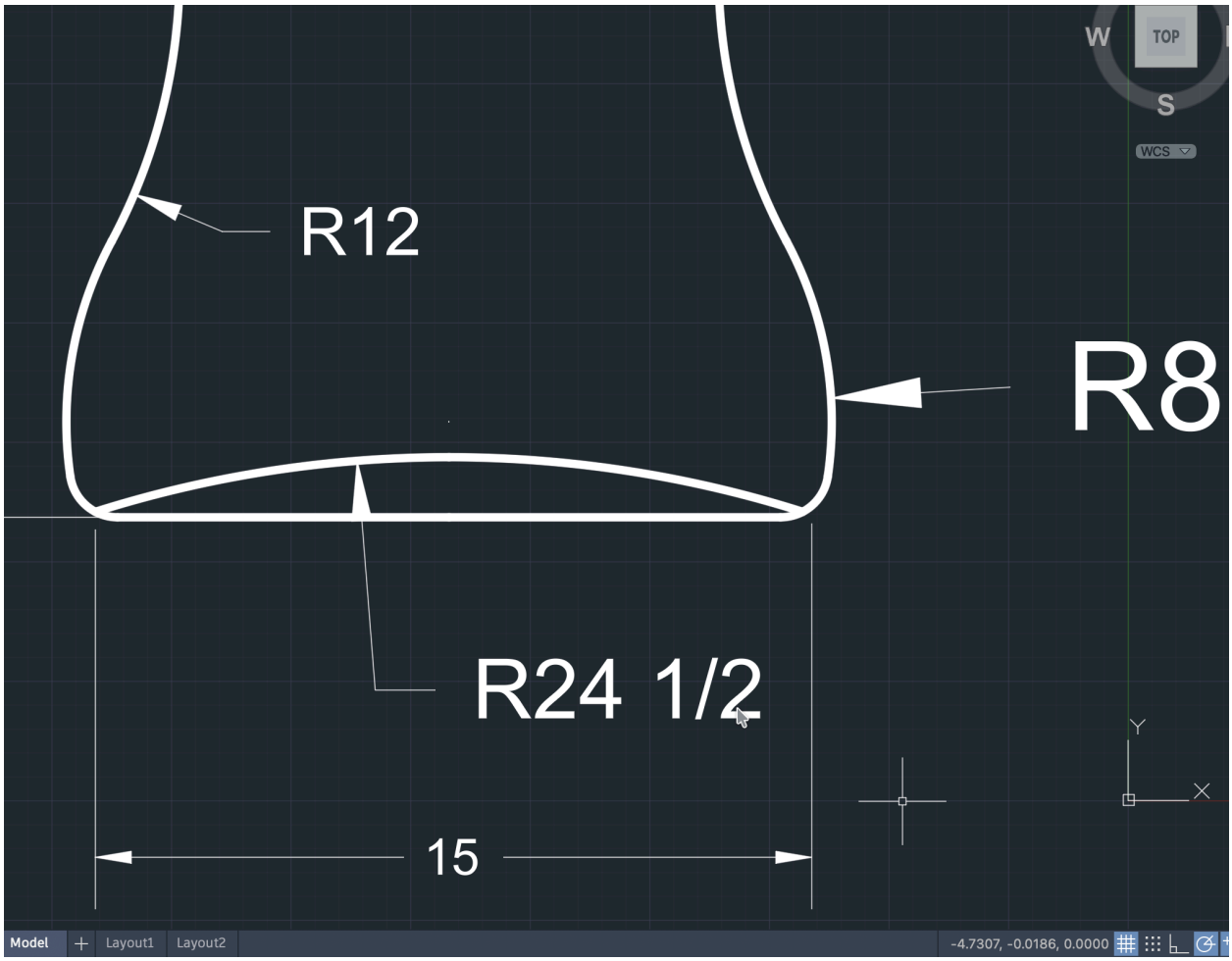
R12
R8
R24 1/2
15
W
TOP
S
WCS
Y
X
Model
Layout1
Layout2
-4.7307, -0.0186, 0.0000

Water Bottle (No Cap)

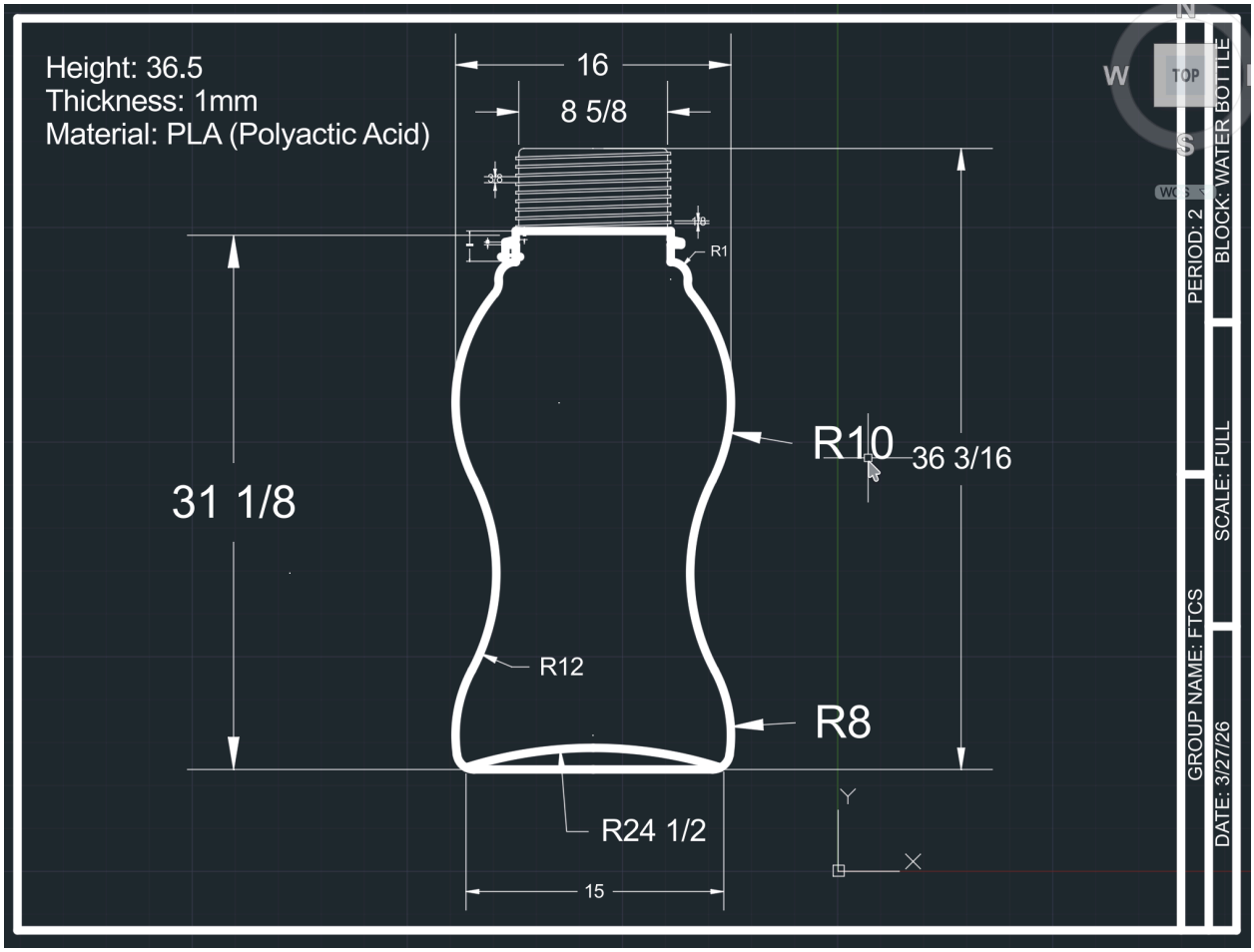
Height: 36.5
Thickness: 1mm
Material: PLA (Polyactic Acid)
16
8 5/8
3/8
1/16
R1
R10
36 3/16
31 1/8
R12
R8
R24 1/2
15
Y
X
N
W
TOP
S
WCS
PERIOD: 2
BLOCK: WATER BOTTLE
GROUP NAME: FTCS
SCALE: FULL
DATE: 3/27/26

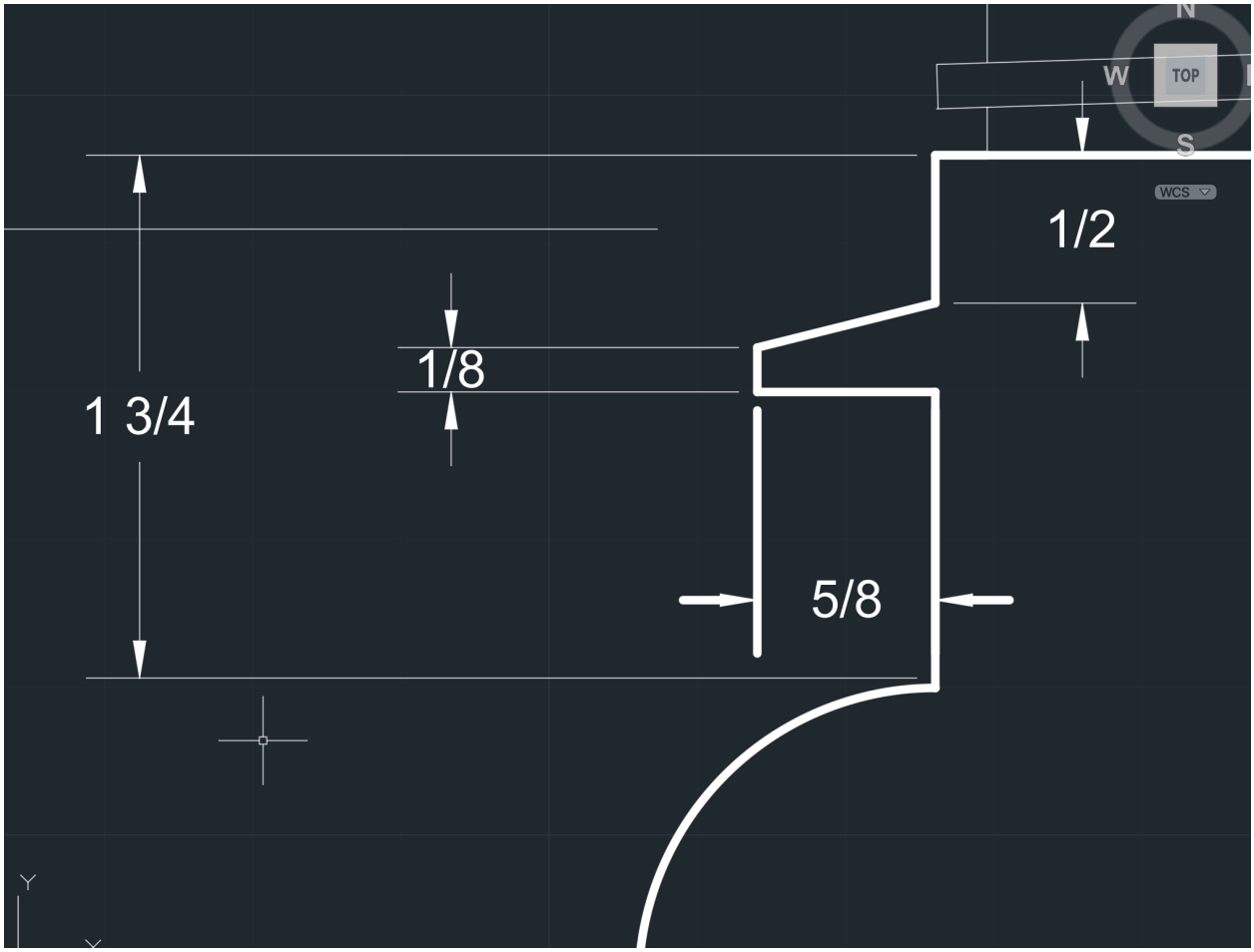
1/2
1/8
1 3/4
5/8
TOP
N
W
S
WCS
Y

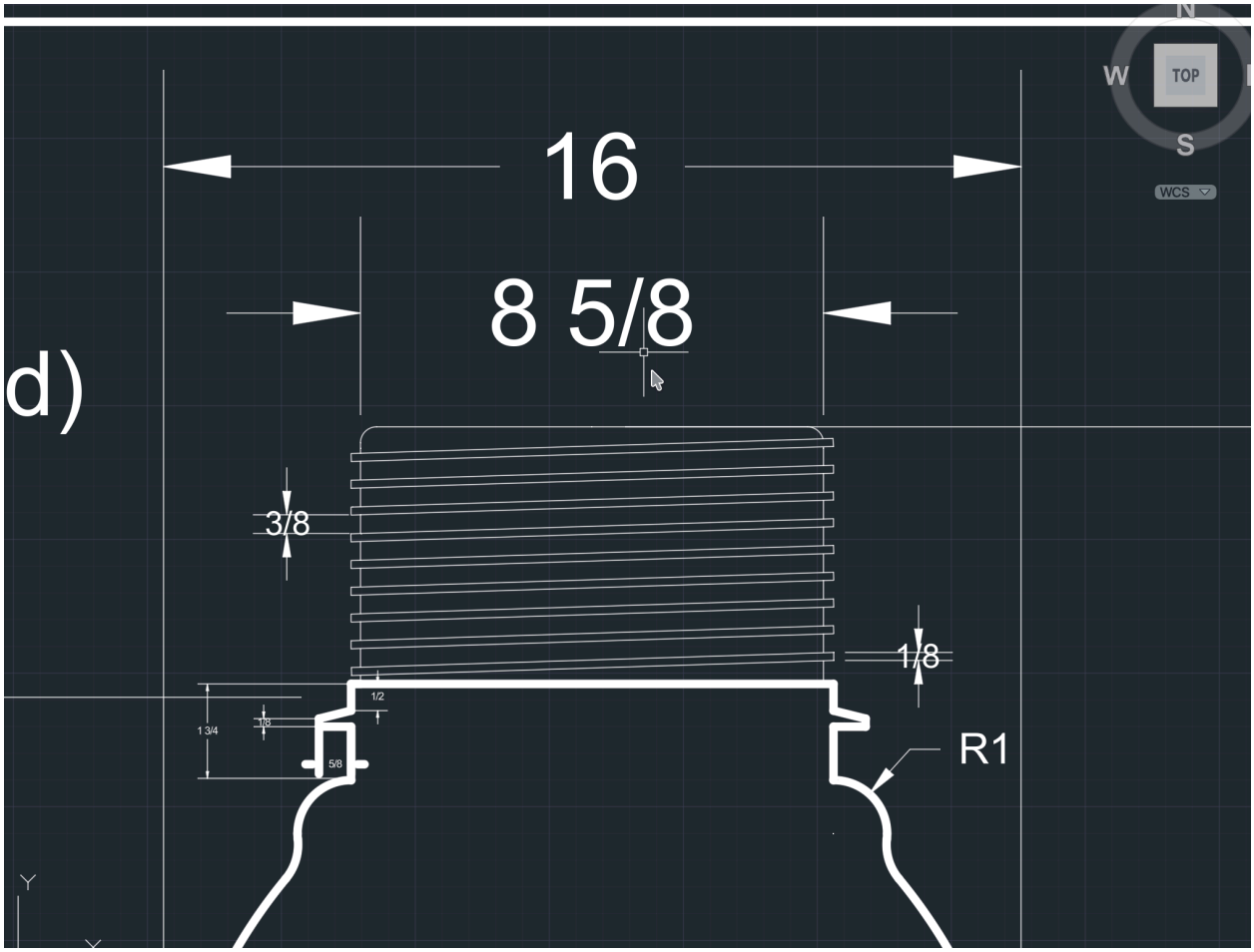
d)
16
8 5/8
3/8
1/8
1/2
1 3/4
1/8
5/8
R1
N
W
TOP
S
WCS
Y

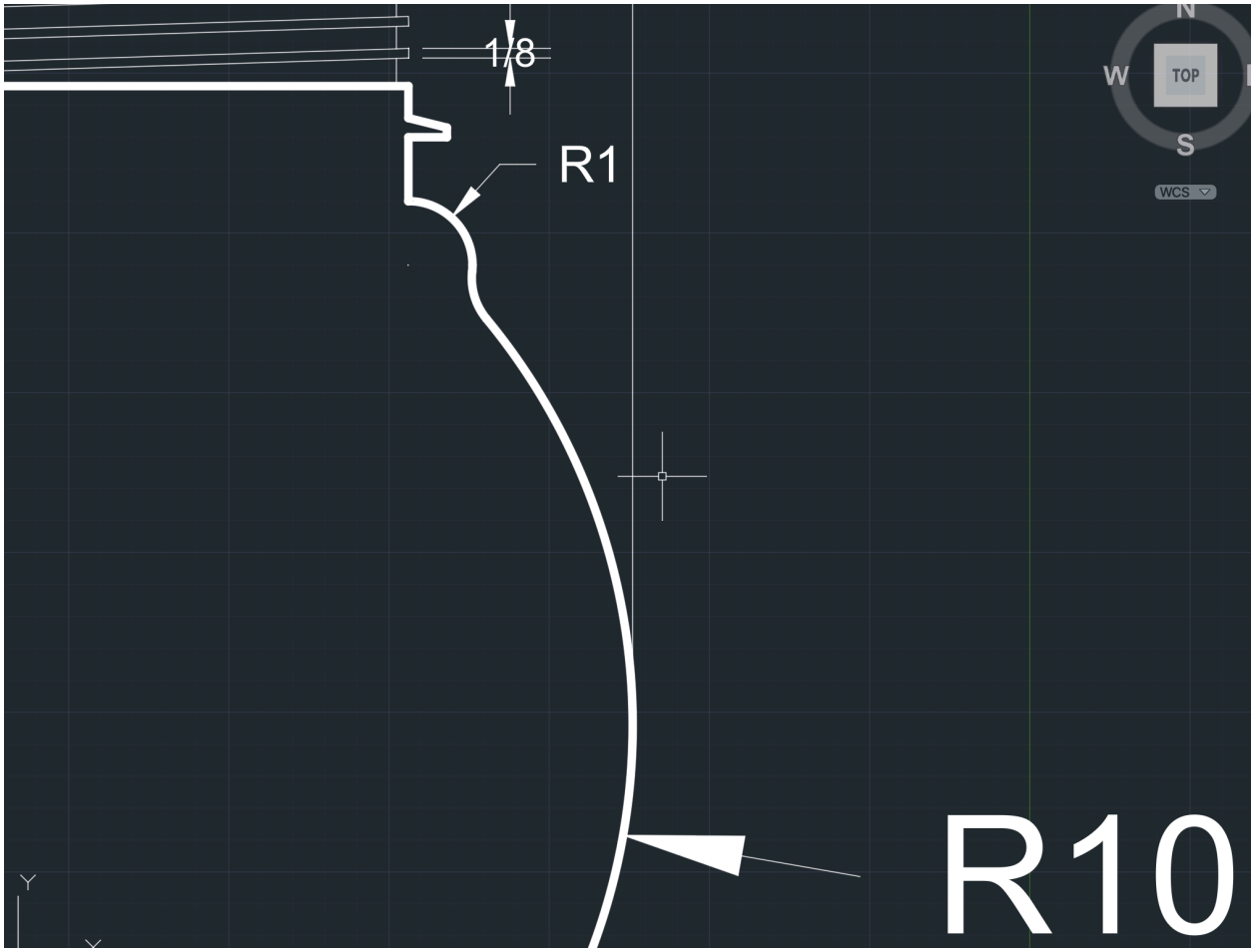
1/8
R1
R10
N
W
TOP
S
WCS
Y

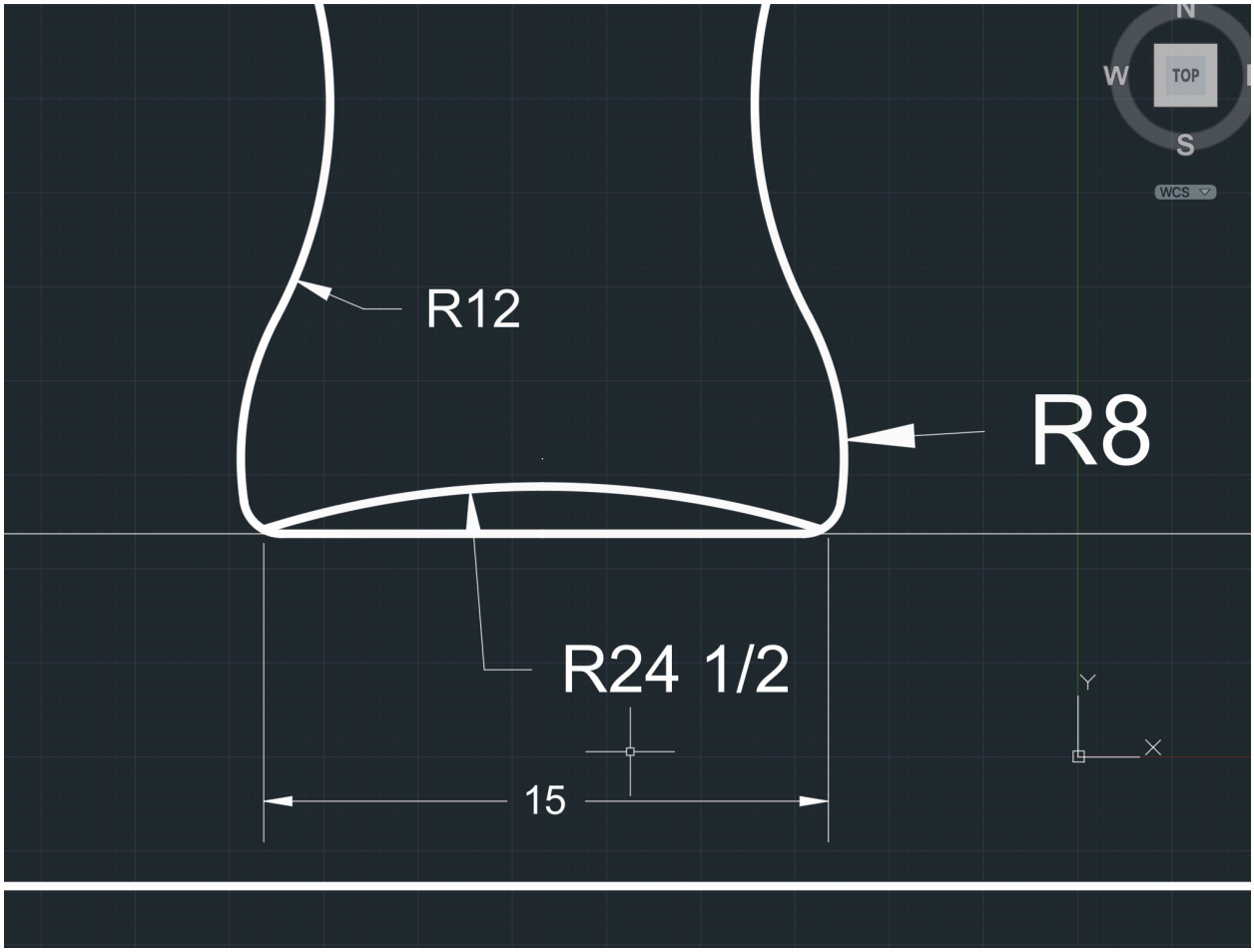
R12
R8
R24 1/2
15
N
W
TOP
S
WCS
Y
X

AutoCAD Cap

Looking to replace the original bottle cap with this one

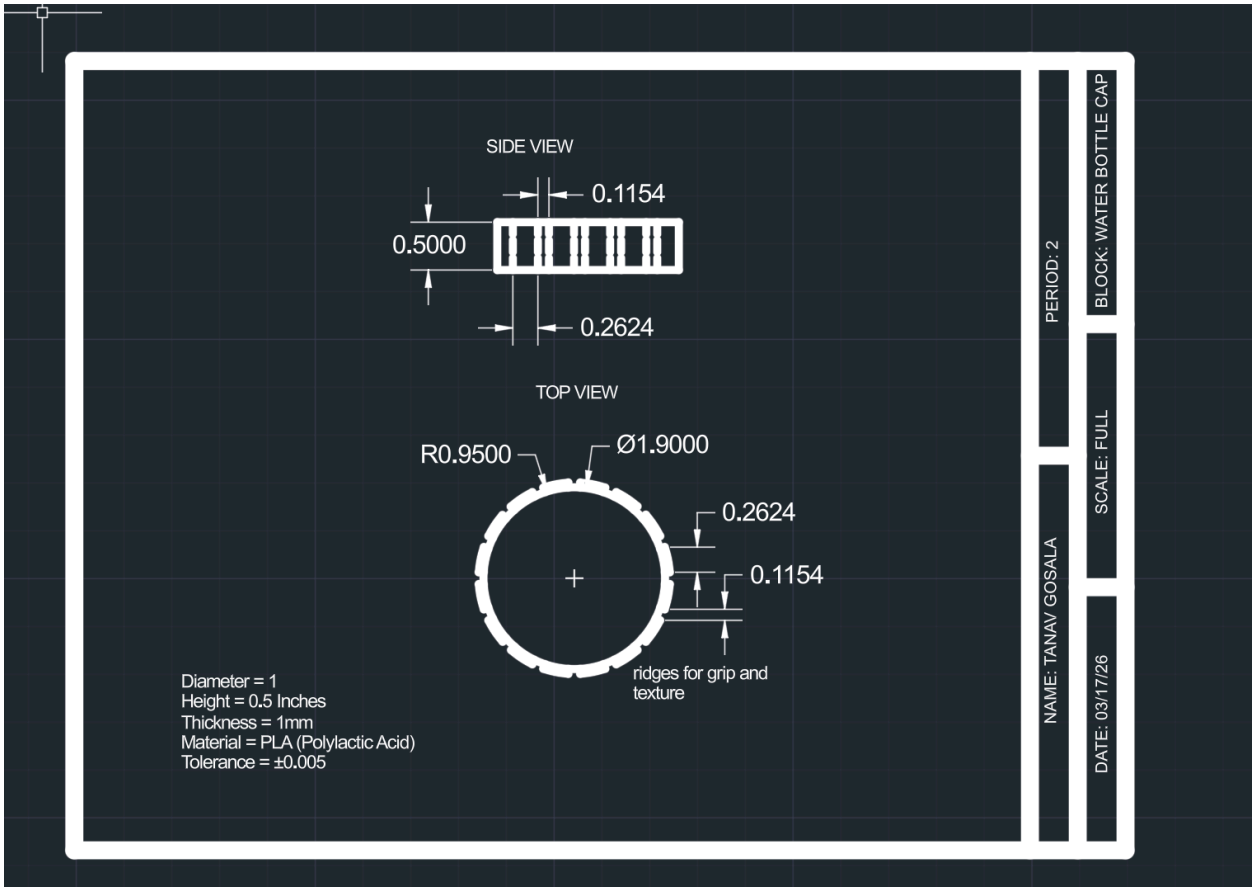

Phase 5

Phase 5:

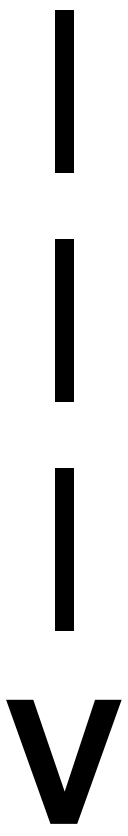

Our Peer Review

FTCS Peer Review Form

Date Provided 04/07/26

Feedback Provided by: Mya, Huma, Kate, Gianna (BloomBrush)

This water bottle we are creating isn't a product we're selling to companies; this is a patent to replace the normal water bottle.

Specific Item #01: Does our water bottle look and feel different from bottles that already exist? Are there any features that seem too similar to something already out there that could hurt our patent?

The bottle feels reminiscent of a gatorade bottle with the curved top with a flap circular bottom. It's different from other reusable bottles however because it looks like a regular water bottle.

Specific Item #02: When you read how we describe our water bottle, can you clearly tell what makes it unique? Is there anything that's confusing or that we need to explain better?

The description of the water bottle somewhat highlights its unique selling proposition (USP), however, it sounds like a lot of other reusable water bottles—saying "reusable", "ecofriendly", etc sounds like many others on the market.

Specific Item #03: Do you think our design is realistic? Could this bottle actually be made and used in real life, or are there parts that seem like they wouldn't work?

This design is realistic—it's hard to go wrong with a waterbottle—but it's essentially a sturdy water bottle but with materials that don;t harm the environment.

Specific Item #04: If a company received our patent, do you think they'd be interested in it? What parts of our design seem most useful or most likely to turn them off?

The most useful part to get companies to invest would be the ecofriendly nature of the product. The similarities to bottles like gatorade/powerade along with the increased manufacturing price because of the biodegradable materials are factors that would turn them off as their main mission is to make profit and they wouldn't want to risk trouble with big companies.

Specific Item #05: Are our sketches or diagrams clear and detailed enough to show what our bottle actually looks like? Can you tell what makes it different just by looking at the drawings?

The sketches are all very clear and readable; the visuals the sketches provided was how we gave our previous feedback on the appearance of the bottle, etc.

Strengths

- Good organization and teamwork—there's little evidence that there was any conflict during this process and the product turned out great.

Areas of Growth

- Maybe do more in depth research when looking at competitors and materials for your product.

Other General Notes / Feedback

- Synthesize data - we're looking at raw data, giving statistics on what they mean.
- Add photos of competitor products and why your product is better.
- Annotate the technical sketches so manufacturers/people can understand what they're looking at.
- The several different views of the bottle with the cap on/off and of the cap itself are really good; maybe add multiviews of the bottle and bottle cap.

Their Peer Review

BloomBrush Peer Review Form

Date Provided: 4/08/26

Feedback Provided by: FTCS

Our product is a brush that holds liquid products to be distributed evenly when styling and washing that has detachable heads for different hair types.

Does our product look unique? If not, can you give suggestions on how to improve our design?

Yes, the combination of detachable heads and built-in liquid distribution makes it stand out from single-function competitors.

Are our sketches clear and understandable?

Yes, the sketches are understandable, but could help if you made the text a little easier to read since the camera didn't pick up on all the writing, like the pencil. But overall, yes, the sketches were good and understandable.

How well do you think our product would sell on the market? Do you think we could beat competition?

It has good potential since it's priced at $12, way cheaper than competitors, and their survey showed that most people struggle with hair care routines.

Are we inclusive enough? Do we have brush heads that accommodate most hair types?

Yes, the detachable heads cover most hair types, including curly, coiled, and thick hair, which were the most common in their survey.

How do you think we worked as a group?

The Gantt chart looks good, and everyone completed their part, and the portfolio looks organized overall. We asked questions individually to the group, and they all answered the questions really well, in depth, and expanded more on our own questions, making us believe that they all worked together as a group well and understood their product.

Strengths

- The survey data backing up the product need and the affordable $12 price point are both really strong.
- AutoCAD drawings are really good, and the annotations in the AutoCAD help me understand everything really well.

Areas of Growth

- I think you should talk more about the USP and explain specifically what makes it better

than the competitors you researched.

- Expand more on how your product can sell for 12$ as your idea, design, and tech doesn't seem to indicate it can sell for 12$ and make a profit.
- The polling data collected was never fully analyzed, you showed the charts but never explained what the numbers actually mean for your product or target audience.

Other General Notes / Feedback

-

Final Reflections

Project's Strengths & Weaknesses:

One of our biggest strengths as a group was how well we worked together once we got into the flow of the project. Everyone pulled their own weight and helped each other, so no one had to do all the work, nor failed to finish the work before the due date. We also communicated really well, since we were close friends, it was really easy to talk about the project and what needed to be done. We split up all the tasks fairly and made sure to keep up with the Gantt Chart due dates. Finishing our AutoCAD assignments early was another strength of our group, about 4 weeks ahead, as it gave us extra time and leeway to finish project assignments and talk about the next steps while getting feedback from Mr.King occasionally. This let us refine our work instead of rushing it before the due date, and let us practice our presentation and refine it so we sounded confident and professional when we pitched our idea.

Our main weakness was Phase 1. We had all just switched from Python and lost our skills in engineering. Things like brainstorming, design process, communication, teamwork, and leadership, we are weak in all of them. Since we were all best friends, it increased the likelihood of us being distracted or pushing off assignments till the last minute. We also had a hard time defining and pitching our idea to our peers since our idea was a combination of ideas that weren't really refined into one specific thing. All of these things slowed us down early on and made the start of our Project really hard.

Going forward from this experience, the biggest takeaway from this project is to start locked in and to combine our ideas into one refined idea that is sold and bulletproof. We also learned that an effective method is to do group meetings at the beginning of each project, so everyone is on the same page before we get deeper into the project, where we cannot return. We are really happy with how the project turned out and how we recovered from Phase 1. This project is a learning experience that we should all carry into the next project we do.

Gantt Chart:

Gantt Chart Template

Tanav:

At the beginning of the project, Phase 1 was really rough for me. We had just switched from Python, and all of us had forgotten everything about engineering, including the process behind it, the mindset, and the teamwork and leadership required. Since we were all friends, it was easy to get off track, such as playing games and watching YouTube, as we had a lot of free time that we took for granted. Communication was also bad during that time, as if we set a due date for an assignment and put it in the Gantt chart, we would all wait until the last minute to do it. We also had a hard time defining what our idea was to each other and our peers, and time sometimes made me question what exactly we are trying to do. This made me feel behind and like we would never get back on track, which was honestly frustrating.

The AutoCAD assignments were probably the easiest part of the project and also one of the moments I felt best about. They helped me grow my AutoCAD skills while also being manageable enough that we could finish them early. Even though they were simple compared to the rest of the project, completing them ahead of time gave us more room to focus on the bigger stuff, which made a real difference later on.

Once Phase 2 rolled around, the first thing we did was have a group meeting to talk about Phase 1 and how rough it was. We talked about the flaws we had and how to fix them going forward. That meeting helped all of us, especially me, to start keeping up with work and staying focused. I also got better at speaking up when something felt off instead of just letting it slide, which was something I struggled with before, since we were all friends. We started finishing assignments early, which felt really good since we had more time to work on the project instead of playing games. After Phase 2, this continued. We finished work early and kept refining our AutoCAD drawings, updating the Gantt chart, and fixing our presentation.

Looking back, this project had its rough moments, especially in Phase 1, but I think we learned from our mistakes and ended up in a really solid place. Going from where we started to where we finished shows a lot of growth, not just in the team but for me personally. It helped me relearn how to lock in, do assignments properly and on time, and actually work as a group without getting off task. My goal going forward is to bring that locked-in mindset from day one instead of letting things fall apart and fixing it mid-project.

Fernando:

Although taking this class was something completely unexpected for not just me, but all of us, this drafting project gave me a ton of experience as part of this water bottle student project, especially collaborating with Tanav on the design and drafting process. My involvement was primarily focused on producing drafts, assisting in the design process, and choosing materials, which gave me a very good opportunity to integrate what I somewhat learned in class into something more realistic and practical to fit this project.

When we began the design process for our water bottle, it was still at a very preliminary stage and not completely defined, but through continued collaboration with one another, we created a finished product that was well-defined and used to meet our expectations. One of the most exciting things about our group was how much more efficient we became as we progressed through the course. Once we got organized properly and started finishing our assignments on time, we quickly caught up to where we needed to be (approximately 4 weeks ahead of the other students in our class). This put us at a significant advantage over the rest of the class; therefore, instead of rushing to meet our due dates (like many other teams), we had additional time to refine the quality of our drafts by improving them, fixing any errors made, and ensuring that all final products were accurate.

All of this contributed heavily to the overall quality of our final product and helped complete this project as a whole. Because we have been working closely together on creating and designing the main components of the project, it helped keep all of the pieces flowing together, and our deliverables were in sync with our responsibilities as well. We continued forward with the technical finish of the project.

Additionally, there were very few issues and/or delays, and as a result, the group was able to continue working without stopping or having to backtrack that much, as my group and I have had to do in previous cases in the past. Overall, everything was organized and consistently ran smoothly, making the project feel less stressful than previous projects and making it feel extremely feasible.

Cameron:

Our water bottle project worked really well as a group effort, with everyone contributing and staying engaged throughout the process. From the beginning, there was a strong sense of collaboration, and tasks were shared fairly so that no one person carried the workload. Because everyone chipped in, the project felt organized and consistent, and we were able to keep up steady progress from start to finish.

The hardest part of the project was definitely defining what the water bottle is. It took time for the group to agree on a clear direction, and we had to go through different suggestions before settling on the best approach. While this slowed us down at the start, it actually helped us think more critically and choose a stronger final concept.

The easiest part was scheduling and organizing when things needed to get done. Everyone was flexible and willing to plan around each other, which made it simple to assign deadlines and stay on track. Once we set a structure, it was easy to follow and helped avoid confusion or last-minute stress.

Overall, our group presented very well and showed strong awareness of timing and responsibilities. We knew when to focus, when to divide tasks, and when to bring everything together for presentation. That coordination made the final result feel polished and professional, and it showed how effective we were as a team. I can use these soft skills that we've developed during this project in the future by incorporating my established soft skills like communication, turning things in on time, and determination.

Sasvath:

This project was a really valuable experience for me, both in terms of what I learned about the design process and how I grew as a teammate. Going into it, I knew we were designing an eco-friendly water bottle, but I did not fully realize how many decisions go into something that sounds simple on the surface. We had to think about materials, cost, who our target audience was, and what would actually make our product stand out from what is already out there. Working through all of that step by step pushed me to think more carefully and not just go with the first idea that came to mind. I feel like I came out of this with a much better understanding of how real product development actually works.

The hardest part for me personally was the research and analysis phase. I wanted us to have a strong, specific angle on what made our bottle different, and figuring out how to clearly communicate that was tougher than I expected. We had solid data from our surveys, but turning that into a clear, unique selling point took a lot of back and forth. There were moments when I was not sure we had landed in the right direction yet. But pushing through that uncertainty and eventually getting to a

concept I was actually proud of made the final result feel much more meaningful. The AutoCAD work was also a challenge since I had to be precise and patient in a way that does not always come naturally to me, but I think the drawings we produced came out really well.

Looking back at the whole project, what stands out most is how well we worked together as a group. Everyone took their responsibilities seriously, and we were all willing to pick up the slack when something needed extra attention. I think the Gantt chart really helped us stay organized and made sure no one was scrambling at the last minute. Presenting at the end felt good because I actually knew the material well and felt confident explaining our decisions. If I could change anything, I would push us to dig even deeper into the competitor research earlier on so we had more time to refine our messaging. Overall, though, I think this was one of the most complete and rewarding projects I have worked on in this class, and I am proud of what we put together as a team.

Phase 6

Phase 6:

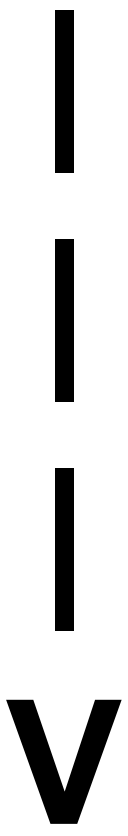

Pre-presentation checklist

FTCS — Final Presentation Day Checklist

Visuals & Displays

- [ ] Poster is ready
- [ ] Digital portfolio open and ready on a laptop or tablet
- [ ] QR code / bit.ly link on the poster is working and has been tested

---

Physical Items

- [x] ~~Laptop or tablet fully charged~~
- [x] ~~Charger brought just in case~~

Poster Sections — all 10 confirmed complete

- [ ] Team logo
- [ ] Problem statement
- [ ] Infographic
- [ ] Polling data
- [ ] Photos
- [ ] Visual timeline
- [ ] Ask Us About
- [ ] Future Goals
- [ ] Thanks section
- [ ] Website / QR code

Team Preparation

- [ ] Practiced a full 5-minute run-through
- [ ] No note cards — everyone knows their part
- [ ] Poster checked for grammar and spelling errors