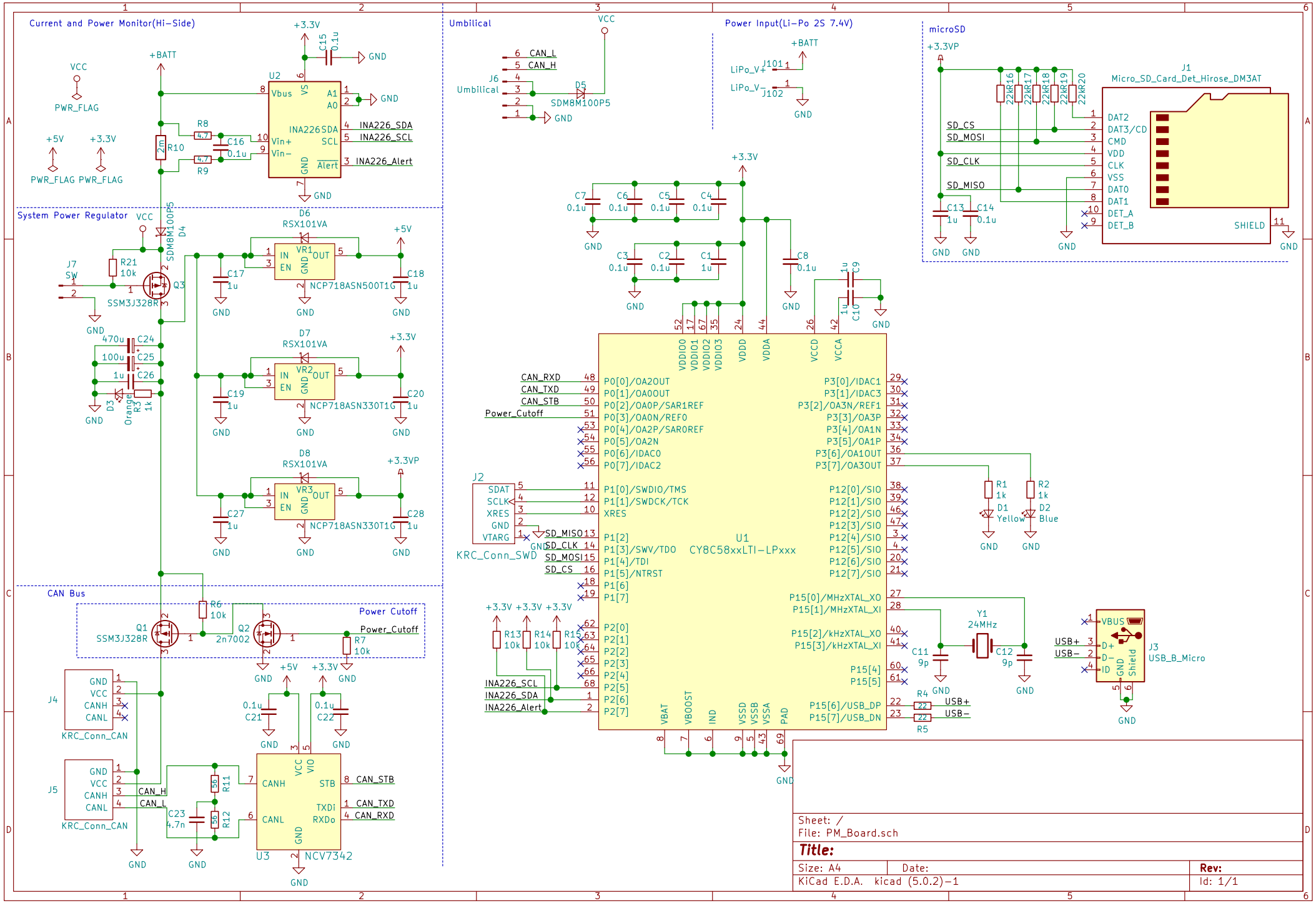
Current and Power Monitor(Hi-Side)
System Power Regulator
CAN Bus
Power Cutoff
Umbilical
Power Input(Li-Po 2S 7.4V)
microSD
U1
CY8C58xxLTI-LPxxx
U2
INA226
U3
NCV7342
J1
Micro_SD_Card_Det_Hirose_DM3AT
J2
KRC_Conn_SWD
J3
USB_B_Micro
J4
KRC_Conn_CAN
J5
KRC_Conn_CAN
J6
Umbilical
J7
SW
Q1
SSM3J328R
Q2
2n7002
Q3
SSM3J328R
D1
Yellow
D2
Blue
D3
Orange
D4
SDM8M100P5
D5
SDM8M100P5
D6
RSX101VA
D7
RSX101VA
D8
RSX101VA
VR1
NCP718ASN500T1G
VR2
NCP718ASN330T1G
VR3
NCP718ASN330T1G
Y1
24MHz
LiPo_V+
LiPo_V-
J101
J102
+BATT
+3.3V
+3.3VP
+5V
VCC
GND
PWR_FLAG
CAN_L
CAN_H
CAN_STB
CAN_TXD
CAN_RXD
Power_Cutoff
INA226_SDA
INA226_SCL
INA226_Alert
SD_CS
SD_MOSI
SD_CLK
SD_MISO
USB+
USB-
Sheet: /
File: PM_Board.sch
Title:
Size: A4
Date:
Rev:
KiCad E.D.A. kicad (5.0.2)-1
Id: 1/1