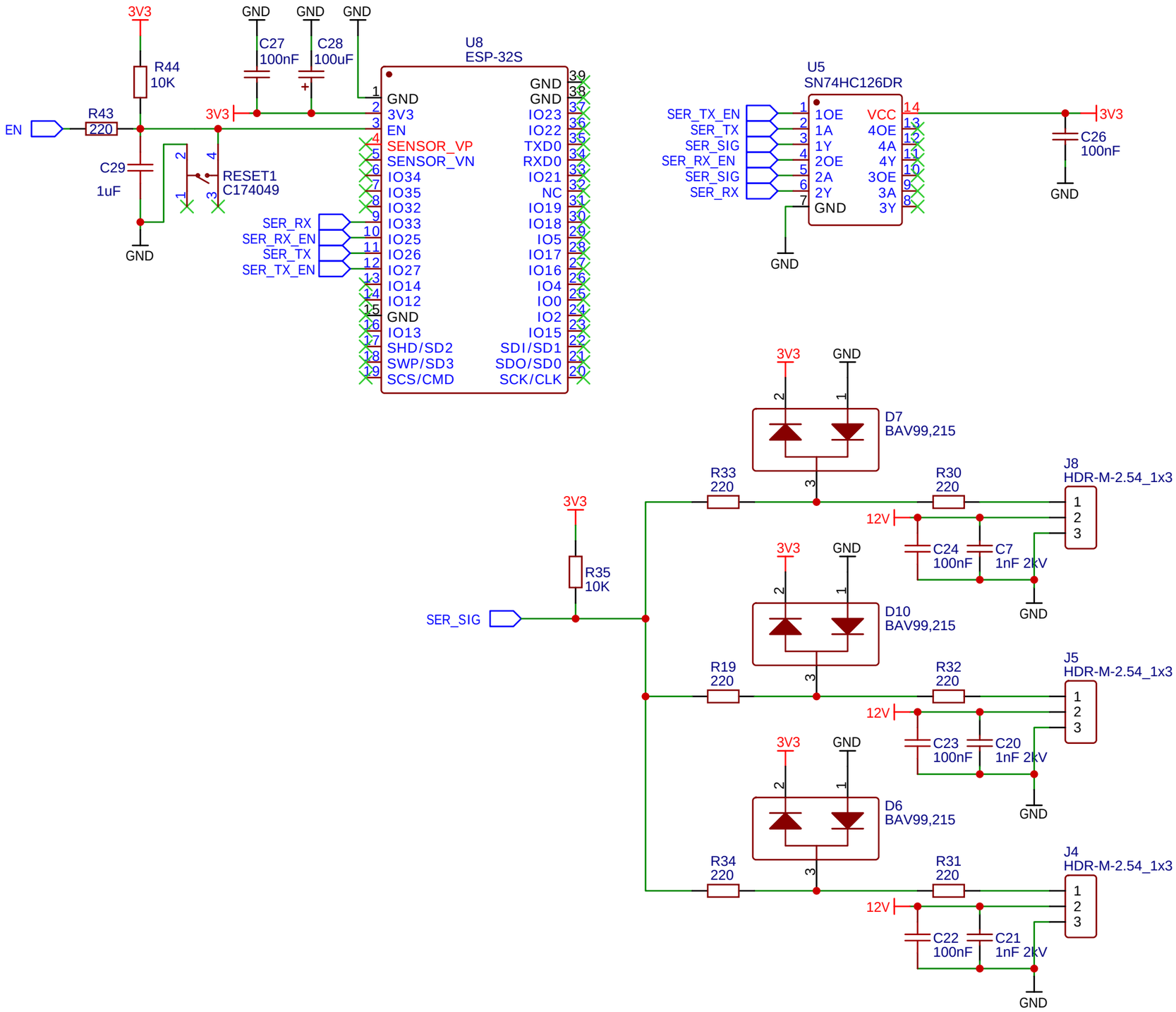

TITLE: Example wiring for bus servo controller

REV: 1.0

Company: Spectoda

Sheet: 1/1

Date: 2022-05-11

Drawn By: Matej Suchanek