Format Rev: B
EN 793331

NOTES:
1. MATERIAL: SEE COMPONENT DRAWINGS FOR INDIVIDUAL MATERIAL SPECIFICATIONS.

2. THREE SAMPLES OF EACH ASSEMBLY, NEW OR REVISED, TO BE SUBMITTED TO WHIRLPOOL ENGINEERING FOR TESTING AND APPROVAL.

3. ALL VISIBLE COMPONENTS MUST MEET WHIRLPOOL SPEC F025 GRADE 1.

4. COMPONENT(S) REFERENCED HEREIN SHALL COMPLY WITH WHIRLPOOL'S CURRENT SPECIFICATIONS, INCLUDING ITS MATERIALS COMPLIANCE SPECIFICATION GES0084 - GLOBAL COLUMN.

5. MARK SHIPPING AND STORAGE CONTAINERS PER WHIRLPOOL SPECIFICATION C136 UL RAW MATERIAL TRACEABILITY.

6. ALL PARTS TO BE PROTECTED FROM DIRT AND OTHER CONTAMINATION PRIOR TO AND DURING ASSEMBLY.

7. ADHESIVE RELEASE LINER MUST NOT TEAR DURING THE PROCESS OF REMOVING THE LINER WHILE PULLING ON PULL TAB.

8. ADHESIVE POCKET PANEL MUST NOT BE PEELED AWAY FROM THE SUBSTARTE POCKET PANEL MATERIAL UPON REMOVAL OF THE ADHESIVE RELEASE LINER.

9. MAINTAIN A 0.25 ±0.25 GAP BETWEEN PROSTAR POCKET PANEL AND POCKET HANDLE.

10. SCREW TORQUE:0.6 ±0.2 N-m (5.3 ±1.5 lbf-in).

11. FOAM-VENT, POCKET-PANEL TO BE COMPRESSED UNDER TWO VENT RIBS SHOWN AND SECURELY HELD IN PLACE.

12. SURFACES INDICATED ON THE ASSEMBLY BY CLASS A, B AND C SHALL CONFORM TO WHIRLPOOL QUALITY STANDARD FN-QA-STD-01.

13. ADHESIVE TO MEET SPECIFICATION M004 GRADE 2, EXCEPT ADHESION TO BE A MINIMUM OF 0.53 N-m (4.7 lbf-in). TESTING TO BE DONE PER T120 EXCEPT PARAGRAPH 4.1 (TEST PANEL TO BE SECTIONS OF ACTUAL PRODUCTION CONSOLE / POCKET MATERIAL) AND PARAGRAPH 4.5 (PRE-BEND AND PEEL TEST SPECIMEN AT 90 INSTED OF 180). TESTS TO BE CONDUCTED ON PRODUCTION PARTS USING A MINIMUM INSERTS WIDTH OF 12.7 mm.

REV	DESCRIPTION OF CHANGE	LOC	BY	C.N.	DATE
A	PRELIMINARY RELEASE	---	BEHERR2	---	19-SEP-2025

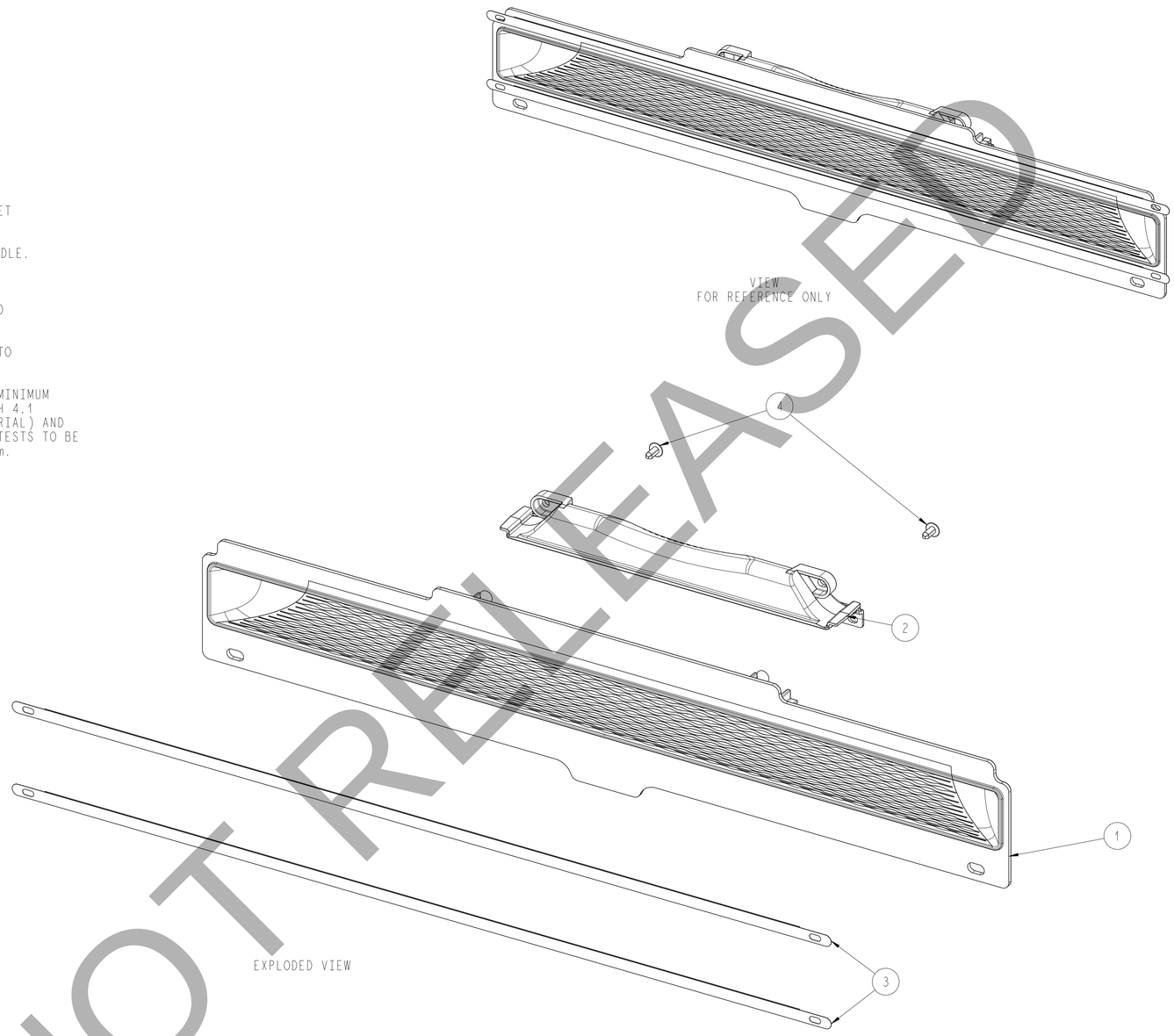

EXPLODED VIEW

NOT RELEASED

PART NO.	REV	DESCRIPTION	NEUTRAL PART NO (ENGINEERING NO)	PROSTAR POCKET PANEL	QTY	POCKET HANDLE	QTY	ADHESIVE POCKET PANEL	QTY	8-16 X .438 TR 6L TLR SG SS	QTY
W11796809	A	POCKET ADHESIVE HANDLE ASSY,BIS	W11791015	W11796806	1	W11242125	1	W11480174	2	W10189731	2
W11796808	A	POCKET ADHESIVE HANDLE ASSY,UNI SILVER		W11796805		W11242124					
W11791018	A	POCKET ADHESIVE HANDLE ASSY,WHT		W11791014		W11242123					
W11791017	A	POCKET ADHESIVE HANDLE ASSY,BLK		W11791013		W11242122					
				1		2		3		4	

INDEX

ADVANCE PRINT
CONFIDENTIAL
28-OCT-2025

PRELIMINARY

DO NOT USE FOR PRODUCTION - DO NOT USE FOR TOOLING

➡ FOR QUOTATION ONLY ⬅
LIST REQUESTED DEVIATIONS FROM DRAWING DIMENSIONS, TOLERANCES OR SPECIFICATIONS IN THE "COMMENTS" PORTION OF THE REQUEST FOR QUOTE

THIS DRAWING IS THE PROPERTY OF WHIRLPOOL CORP. IT CONTAINS CONFIDENTIAL INFORMATION BELONGING TO AND/OR ENTRUSTED TO WHIRLPOOL. IT IS DISCLOSED IN CONFIDENCE AND SHALL NOT BE HELD, REPRODUCED, DISCLOSED OR USED EXCEPT IN A MANNER AND FOR A PURPOSE EXPRESSLY PERMITTED BY WHIRLPOOL IN WRITING.

VENDORS SHALL NOT REVISE ANY PHYSICAL, DIMENSIONAL, OR PERFORMANCE CHARACTERISTICS UNLESS AUTHORIZED IN WRITING BY WHIRLPOOL ENGINEERING GROUP.

WHIRLPOOL TEST SPECIFICATIONS, IF ANY, ARE NOT INTENDED TO ASSUME ANY RESPONSIBILITY FOR SUBSEQUENT PROBLEMS WITH OR CAUSED BY THE PART, COMPONENT, OR ASSEMBLY PROVIDED BY THE SUPPLIER, AND DO NOT RELIEVE THE SUPPLIER OF ITS OBLIGATIONS INCLUDING, BUT NOT LIMITED TO, THE NEED TO PERFORM ITS OWN TESTING, INSPECTION AND ONGOING QUALITY CONTROL, AND ASSURING FITNESS FOR USE. ANY WHIRLPOOL RECOMMENDED TEST AND ITS OUTCOME DO NOT IN ANYWAY LIMIT OR CHANGE THE WARRANTY CONTAINED IN WHIRLPOOL'S PURCHASE ORDER OR SUPPLY AGREEMENT.

METRIC DIMENSIONS IN mm
DEFAULT SCALE 1:1
DO NOT SCALE PRINT
THIRD ANGLE PROJECTION
INTERPRETATION PER ASME Y14.5-2009
CREATION DATE 19-SEP-2025
DRAWN BY BEHERR2

Whirlpool CORPORATION
Whirlpool Corporation
Benton Harbor, MI USA

DESCRIPTION (ENGLISH): POCKET ASM, WP - EBL
DESCRIPTION (LOCAL): ---

DRAWING SIZE	SHEET	DRAWING NUMBER	DRAWING REV
A1	1 OF 2	W11791015	A

In some European factories the letter "W" of the part code mentioned herein will be automatically replaced by the number "4000" (e.g. "W12345678" becomes "40001234567 8").

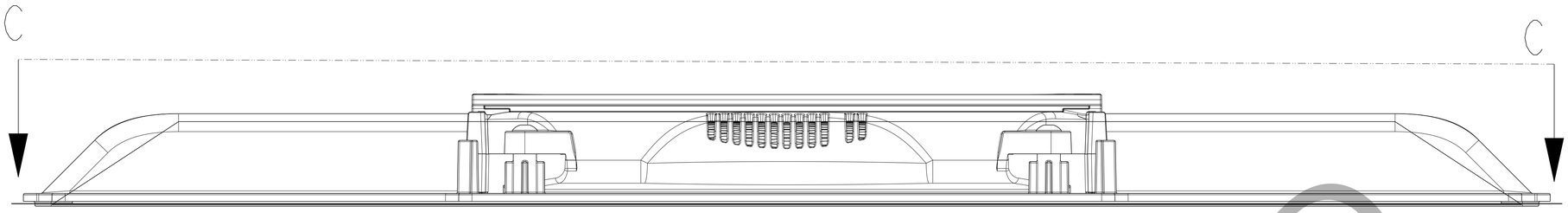

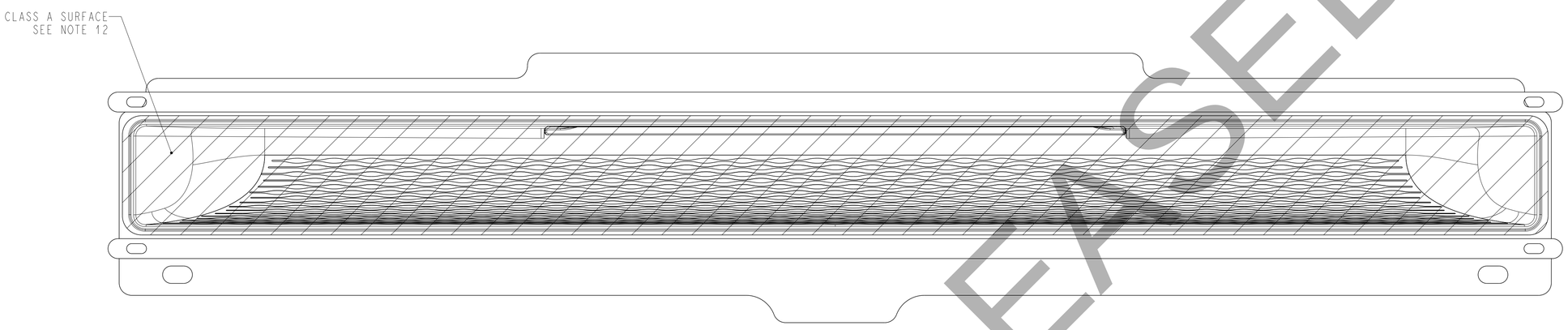

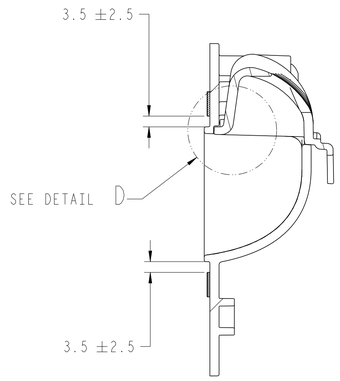

SECTION A-A

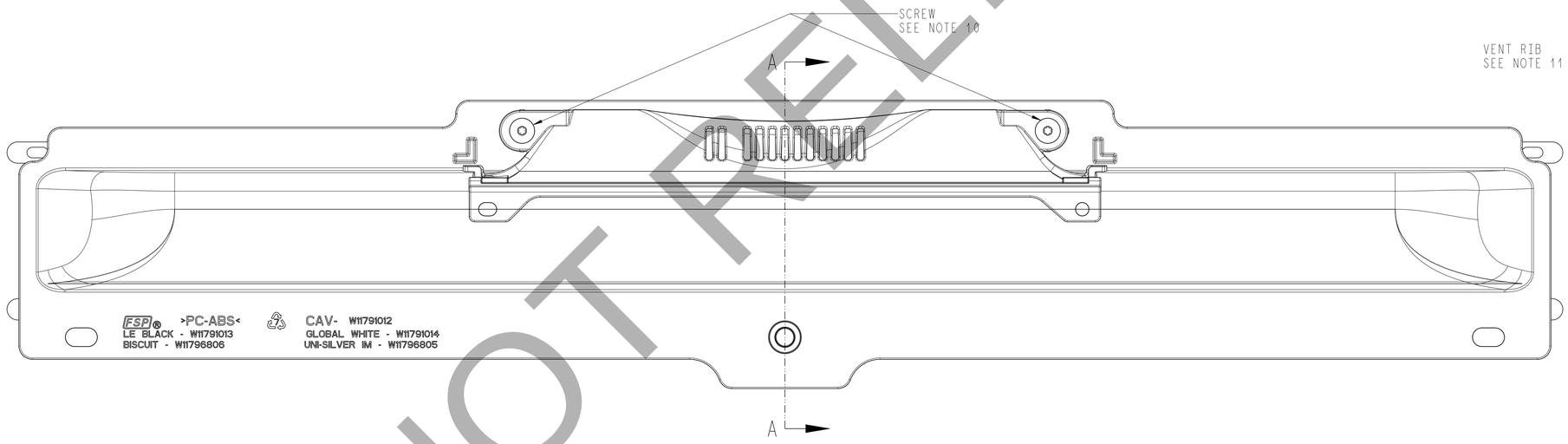

VIEW C-C

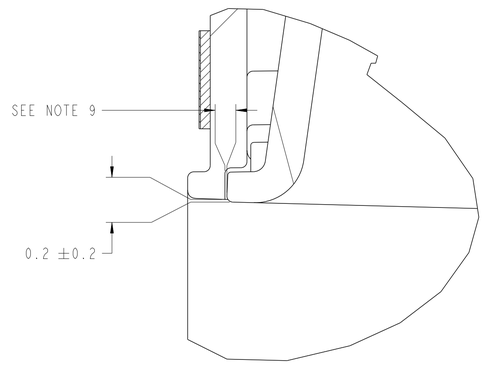

DETAIL D
SCALE 4:1

NOT RELEASED

Whirlpool Corporation
Benton Harbor, MI USA

DESCRIPTION (ENGLISH)	POCKET ASM, WP - EBL
DESCRIPTION (LOCAL)	- - -
DRAWING SIZE	A1
SHEET	2 OF 2
DRAWING NUMBER	W11791015
DRAWING REV	A

In some European factories the letter "W" of the part code mentioned herein will be automatically replaced by the number "4000" (e.g. "W12345678" becomes "400012345678")