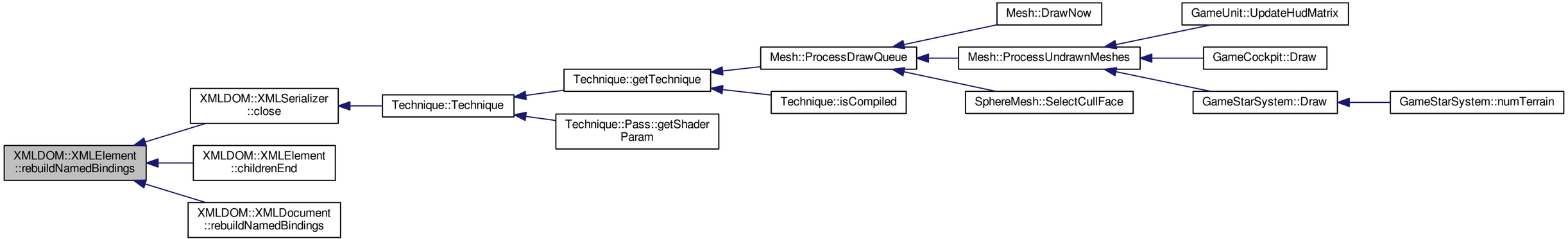
XMLDOM::XMLElement ::rebuildNamedBindings
XMLDOM::XMLSerializer ::close
XMLDOM::XMLElement ::childrenEnd
XMLDOM::XMLDocument ::rebuildNamedBindings
Technique::Technique
Technique::getTechnique
Technique::Pass::getShader Param
Mesh::ProcessDrawQueue
Technique::isCompiled
Mesh::DrawNow
Mesh::ProcessUndrawnMeshes
SphereMesh::SelectCullFace
GameUnit::UpdateHudMatrix
GameCockpit::Draw
GameStarSystem::Draw
GameStarSystem::numTerrain