Transient Analysis of an RC Circuit

Problem 1.1.16 — EC 2007

EE25BTECH11016- CH. Taraka Abhinav

Problem 1.1.16 – EC 2007

In the circuit shown, $V_C = 0$ V at $t = 0$ sec. For $t > 0$, the capacitor current $i_c(t)$ (t in seconds) is:

Options:

a. $0.50\, e^{-25t}$ mA

b. $0.25\, e^{-25t}$ mA

c. $0.50\, e^{-12.5t}$ mA

d. $0.25\, e^{-6.25t}$ mA

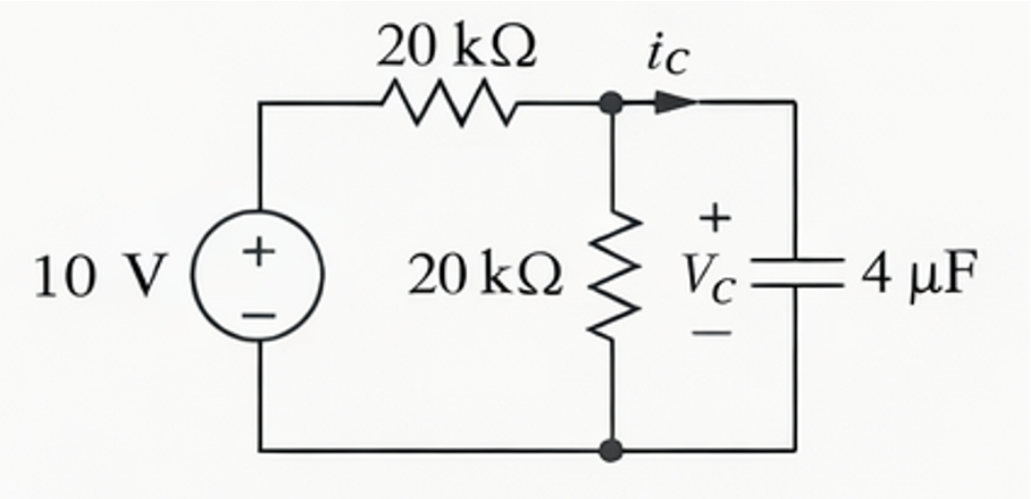

Initial Condition

Given: $V_C(t = 0^-) = 0\,\mathrm{V}$

A capacitor **cannot change its voltage instantaneously** because an instantaneous change requires **infinite current**, which is physically impossible.

Therefore:

$$V_C(t = 0^+) \;=\; V_C(t = 0^-) \;=\; \mathbf{0\,V}$$

At $t = 0^+$, since $V_C = 0$, the capacitor behaves as a **short circuit**.

Steady-State Voltage V_∞

As $t \to \infty$, the capacitor is **fully charged**

$\Rightarrow$ no current flows into it $\Rightarrow$ capacitor is an **open circuit**

The two resistors then form a simple **Voltage Divider**:

$$V_\infty = V_s \times \frac{R_2}{R_1 + R_2} = 10 \times \frac{20\,\mathrm{k}}{20\,\mathrm{k} + 20\,\mathrm{k}} = 10 \times \frac{1}{2}$$

$$V_\infty = 5\,\mathrm{V}$$

Thévenin Resistance R_{th}

Deactivate the independent voltage source
(replace with a **short circuit**)

Looking from the capacitor terminals, both $20\,\mathrm{k}\Omega$ resistors are now connected **in parallel**:

$$R_{th} = 20\,\mathrm{k} \parallel 20\,\mathrm{k} = \frac{20 \times 20}{20 + 20}\,\mathrm{k} = \frac{400}{40}\,\mathrm{k}$$

$$R_{th} = 10\,\mathrm{k}\Omega$$

Time Constant τ

The time constant for an RC circuit is:

$$\tau = R_{th} \cdot C$$

Substituting $R_{th} = 10\,\mathrm{k}\Omega$ and $C = 4\,\mu\mathrm{F}$:

$$\tau = 10 \times 10^3 \times 4 \times 10^{-6} = 40 \times 10^{-3}\,\mathrm{s}$$

$$\tau = 40\,\mathrm{ms}$$

Therefore the decay exponent:

$$\frac{1}{\tau} = \frac{1}{0.04} = \mathbf{25\,s^{-1}}$$

Capacitor Voltage $V_C(t)$

The standard RC complete response formula:

$$V_C(t) \;=\; V_\infty \;+\; \left[V_C(t=0^+) - V_\infty\right] e^{-t/\tau}$$

Substituting $V_\infty = 5\,\mathrm{V}$, $\quad V_C(t=0^+) = 0\,\mathrm{V}$, $\quad 1/\tau = 25$:

$$V_C(t) \;=\; 5 \;+\; [0-5]\, e^{-25t}$$

$$V_C(t) \;=\; 5\left(1 - e^{-25t}\right)\mathrm{V}$$

Check: At $t = 0$: $V_C = 5(1-1) = 0\,\mathrm{V}$ ✓ As $t \to \infty$: $V_C \to 5\,\mathrm{V}$ ✓

Capacitor Current $i_c(t)$

Using the fundamental capacitor relation:

$$i_c(t) \;=\; C\,\frac{dV_C}{dt}$$

Differentiating $V_C(t) = 5(1 - e^{-25t})$:

$$\frac{dV_C}{dt} \;=\; 5 \times 25\,e^{-25t} \;=\; 125\,e^{-25t}\,\mathrm{V/s}$$

Multiplying by $C = 4 \times 10^{-6}\,\mathrm{F}$:

$$i_c(t) \;=\; 4 \times 10^{-6} \;\times\; 125\,e^{-25t} \;=\; 500 \times 10^{-6}\,e^{-25t}\,\mathrm{A}$$

$$i_c(t) \;=\; 0.50\,e^{-25t}\,\mathrm{mA}$$

Verification via KCL

At the junction node, applying KCL:

$$i_c = \underbrace{\frac{10 - V_C}{20\,\mathrm{k}}}_{i_1 \text{ (series R)}} - \underbrace{\frac{V_C}{20\,\mathrm{k}}}_{i_2 \text{ (shunt R)}} = \frac{10 - 2V_C}{20\,\mathrm{k}}$$

Substituting $V_C = 5(1 - e^{-25t})$, so $2V_C = 10(1 - e^{-25t})$:

$$i_c(t) = \frac{10 - 10(1 - e^{-25t})}{20\,\mathrm{k}} = \frac{10\,e^{-25t}}{20\,\mathrm{k}}$$

$$i_c(t) = 0.50\,e^{-25t}\,\mathrm{mA}$$

Capacitor Voltage – Python I

```
import numpy as np
import matplotlib.pyplot as plt

t = np.linspace(0, 0.2, 1000)
V = 5
tau = 0.04

Vc = V*(1 - np.exp(-t/tau))

plt.plot(t*1000, Vc)
plt.axhline(5, linestyle='--')
plt.show()
```

Capacitor Voltage – C Code I

```
#include <stdio.h>
#include <math.h>

int main(){
   double t, V=5, tau=0.04;

   for(int i=0;i<=200;i++){
      t = i/1000.0;
      double Vc = V*(1-exp(-t/tau));

      printf("%lf %lf\n", t*1000, Vc);
   }
   return 0;
}
```

Capacitor Voltage Plot

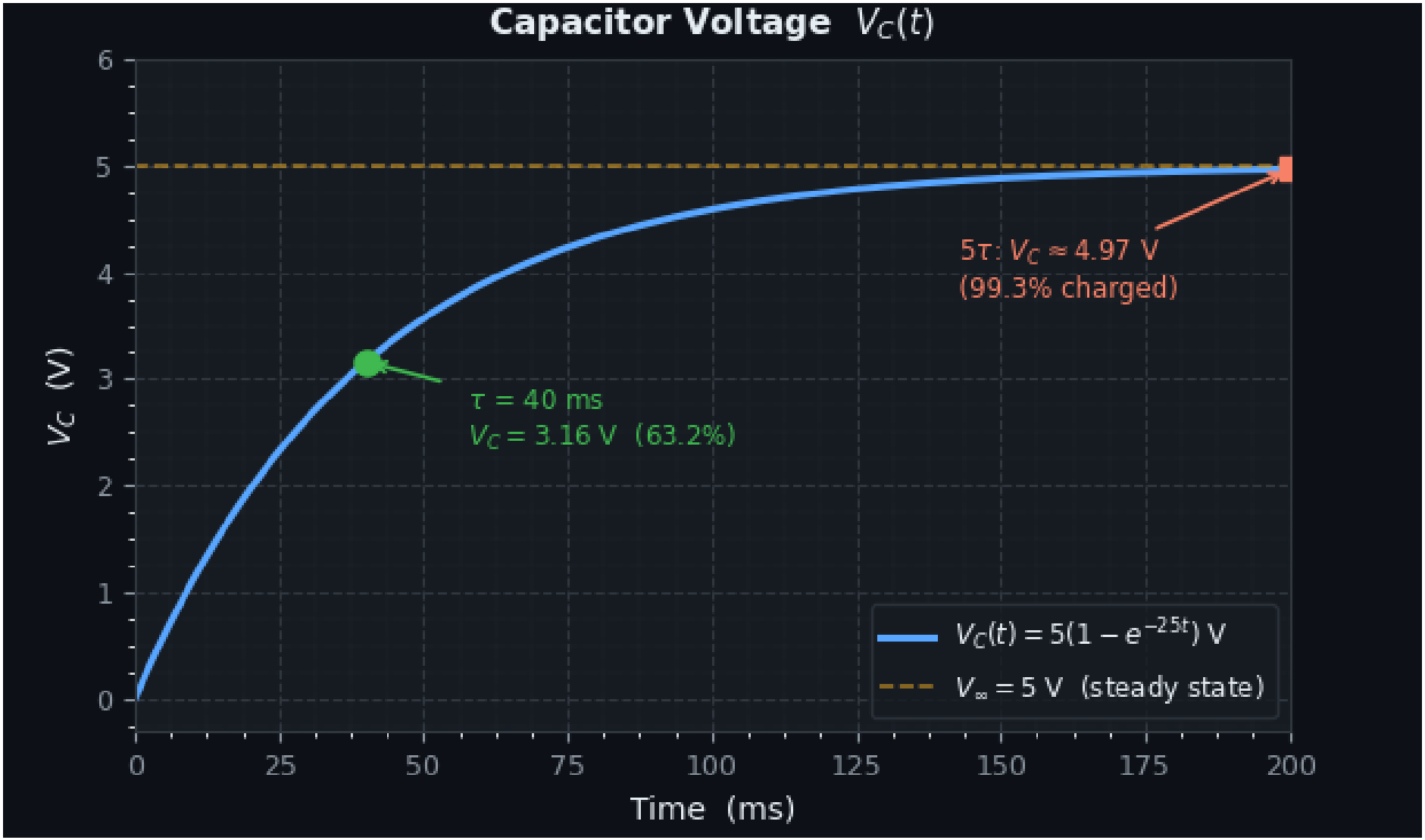

Capacitor Current – Python I

```
import numpy as np
import matplotlib.pyplot as plt

t = np.linspace(0, 0.2, 1000)
V = 5
R = 10000
tau = 0.04

ic = (V/R)*np.exp(-t/tau)*1000

plt.plot(t*1000, ic)
plt.axhline(0, linestyle='--')
plt.show()
```

Capacitor Current – C Code I

```
#include <stdio.h>
#include <math.h>

int main(){
   double t, V=5, R=10000, tau=0.04;

   for(int i=0;i<=200;i++){
      t = i/1000.0;
      double ic = (V/R)*exp(-t/tau)*1000;

      printf("%lf %lf\n", t*1000, ic);
   }
   return 0;
}
```

Capacitor Current Plot

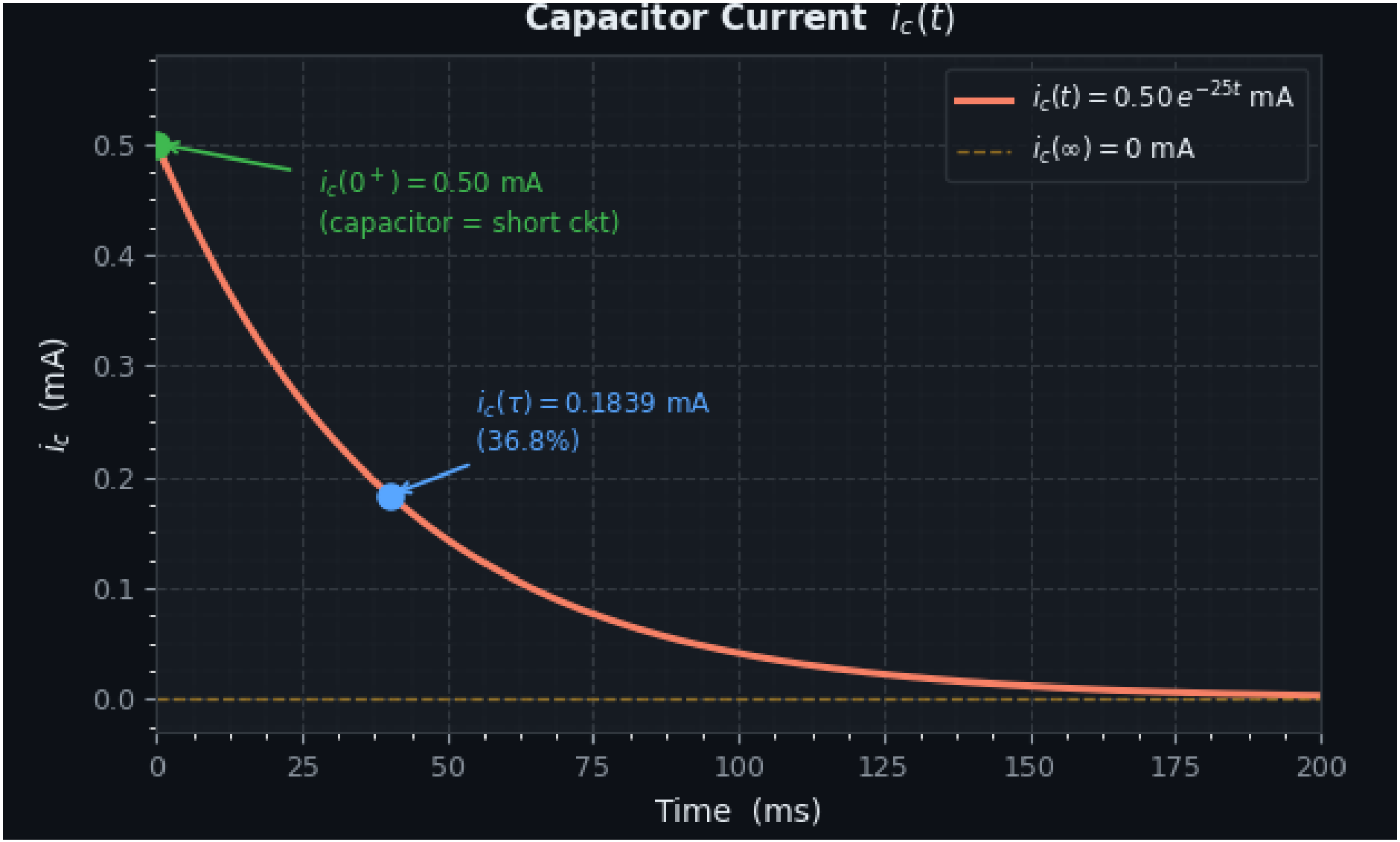

Overlay Plot – Python Code I

```
import numpy as np
import matplotlib.pyplot as plt

t = np.linspace(0, 0.2, 1000)
V = 5
tau = 0.04

Vc = V * (1 - np.exp(-t/tau))
ic = (V/10000) * np.exp(-t/tau) * 1000

fig, ax1 = plt.subplots()

ax1.plot(t*1000, Vc)
ax1.set_xlabel("Time (ms)")
ax1.set_ylabel("Vc (V)")

ax2 = ax1.twinx()
ax2.plot(t*1000, ic, linestyle='--')
ax2.set_ylabel("ic (mA)")

plt.show()
```

Overlay Plot – C Code I

```
#include <stdio.h>
#include <math.h>

int main() {
   double t, V=5, tau=0.04;

   for(int i=0;i<=200;i++){
      t = i/1000.0;
      double Vc = V*(1-exp(-t/tau));
      double ic = (V/10000.0)*exp(-t/tau)*1000;

      printf("%lf %lf %lf\n", t*1000, Vc, ic);
   }
   return 0;
}
```
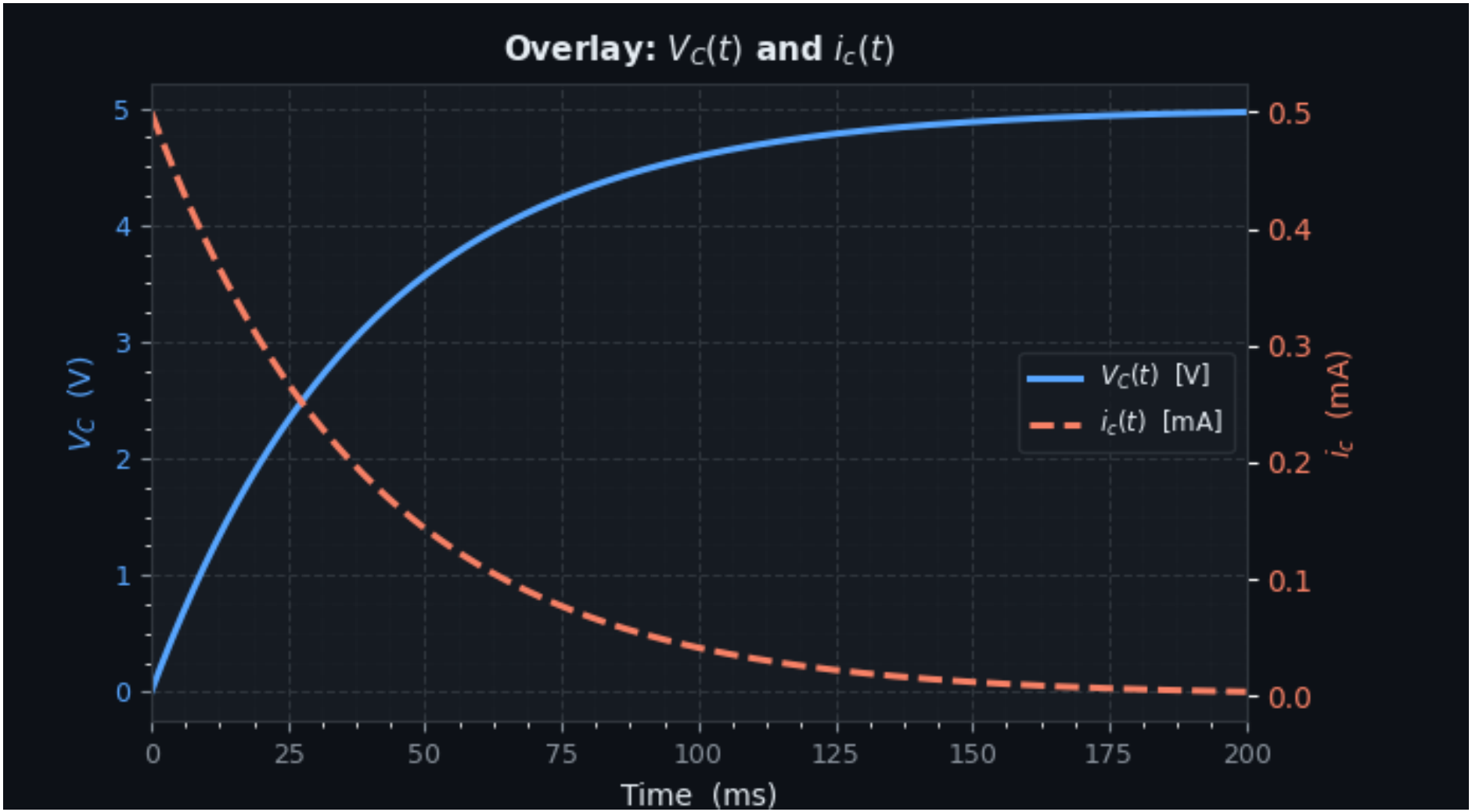
Overlay Plot