Transient Analysis of an RC Circuit

Problem 1.1.16 — EC 2007

EE25BTECH11016- CH. Taraka Abhinav

Problem 1.1.16 – EC 2007

In the circuit shown, $V_C = 0$ V at $t = 0$ sec. For $t > 0$, the capacitor current $i_c(t)$ (t in seconds) is:

Options:

a. $0.50\, e^{-25t}$ mA

b. $0.25\, e^{-25t}$ mA

c. $0.50\, e^{-12.5t}$ mA

d. $0.25\, e^{-6.25t}$ mA

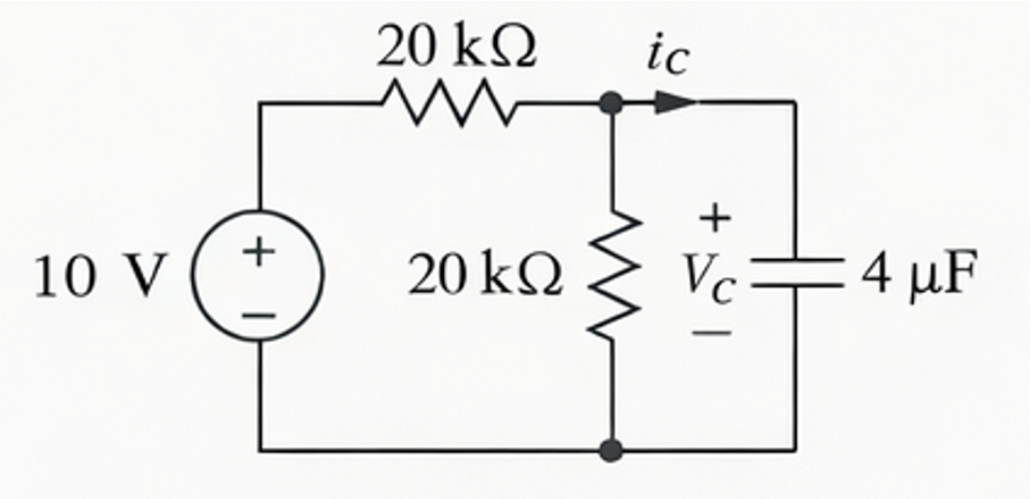

Initial Condition

Given: $V_C(t = 0^-) = 0\,\mathrm{V}$

A capacitor **cannot change its voltage instantaneously** because an instantaneous change requires **infinite current**, which is physically impossible.

Therefore:

$$V_C(t = 0^+) \;=\; V_C(t = 0^-) \;=\; \mathbf{0\,V}$$

At $t = 0^+$, since $V_C = 0$, the capacitor behaves as a **short circuit**.

Steady-State Voltage V_∞

As $t \to \infty$, the capacitor is **fully charged**

$\Rightarrow$ no current flows into it $\Rightarrow$ capacitor is an **open circuit**

The two resistors then form a simple **Voltage Divider**:

$$V_\infty = V_s \times \frac{R_2}{R_1 + R_2} = 10 \times \frac{20\,\mathrm{k}}{20\,\mathrm{k} + 20\,\mathrm{k}} = 10 \times \frac{1}{2}$$

$$V_\infty = 5\,\mathrm{V}$$

Thévenin Resistance R_{th}

Deactivate the independent voltage source
(replace with a **short circuit**)

Looking from the capacitor terminals, both $20\,\mathrm{k}\Omega$ resistors are now connected **in parallel**:

$$R_{th} = 20\,\mathrm{k} \parallel 20\,\mathrm{k} = \frac{20 \times 20}{20 + 20}\,\mathrm{k} = \frac{400}{40}\,\mathrm{k}$$

$$R_{th} = 10\,\mathrm{k}\Omega$$

Time Constant τ

The time constant for an RC circuit is:

$$\tau = R_{th} \cdot C$$

Substituting $R_{th} = 10\,\mathrm{k}\Omega$ and $C = 4\,\mu\mathrm{F}$:

$$\tau = 10 \times 10^3 \times 4 \times 10^{-6} = 40 \times 10^{-3}\,\mathrm{s}$$

$$\tau = 40\,\mathrm{ms}$$

Therefore the decay exponent:

$$\frac{1}{\tau} = \frac{1}{0.04} = \mathbf{25\,s^{-1}}$$

Capacitor Voltage $V_C(t)$

The standard RC complete response formula:

$$V_C(t) \;=\; V_\infty \;+\; \left[V_C(t=0^+) - V_\infty\right] e^{-t/\tau}$$

Substituting $V_\infty = 5\,\mathrm{V}$, $\quad V_C(t=0^+) = 0\,\mathrm{V}$, $\quad 1/\tau = 25$:

$$V_C(t) \;=\; 5 \;+\; [0-5]\, e^{-25t}$$

$$V_C(t) \;=\; 5\left(1 - e^{-25t}\right)\mathrm{V}$$

Check: At $t = 0$: $V_C = 5(1-1) = 0\,\mathrm{V}$ ✓ As $t \to \infty$: $V_C \to 5\,\mathrm{V}$ ✓

Capacitor Current $i_c(t)$

Using the fundamental capacitor relation:

$$i_c(t) \;=\; C\,\frac{dV_C}{dt}$$

Differentiating $V_C(t) = 5(1 - e^{-25t})$:

$$\frac{dV_C}{dt} \;=\; 5 \times 25\,e^{-25t} \;=\; 125\,e^{-25t}\,\mathrm{V/s}$$

Multiplying by $C = 4 \times 10^{-6}\,\mathrm{F}$:

$$i_c(t) \;=\; 4 \times 10^{-6} \;\times\; 125\,e^{-25t} \;=\; 500 \times 10^{-6}\,e^{-25t}\,\mathrm{A}$$

$$i_c(t) \;=\; 0.50\,e^{-25t}\,\mathrm{mA}$$

Verification via KCL

At the junction node, applying KCL:

$$i_c = \underbrace{\frac{10 - V_C}{20\,\mathrm{k}}}_{i_1 \text{ (series R)}} - \underbrace{\frac{V_C}{20\,\mathrm{k}}}_{i_2 \text{ (shunt R)}} = \frac{10 - 2V_C}{20\,\mathrm{k}}$$

Substituting $V_C = 5(1 - e^{-25t})$, so $2V_C = 10(1 - e^{-25t})$:

$$i_c(t) = \frac{10 - 10(1 - e^{-25t})}{20\,\mathrm{k}} = \frac{10\,e^{-25t}}{20\,\mathrm{k}}$$

$$i_c(t) = 0.50\,e^{-25t}\,\mathrm{mA}$$

Advanced: ODE Formulation

Applying **KCL** at the capacitor node for $t > 0$:

$$C\frac{dV_C(t)}{dt} + \frac{V_C(t)}{R_2} = \frac{V_s - V_C(t)}{R_1}$$

Rearranging into the standard first-order linear ODE form:

$$\frac{dV_C(t)}{dt} + \left(\frac{R_1 + R_2}{R_1 R_2 C}\right) V_C(t) = \frac{V_s}{R_1 C}$$

Substituting circuit values:

$$\frac{dV_C(t)}{dt} + \mathbf{25\,V_C(t)} = \mathbf{125}$$

Advanced: ODE Solution

From the derived ODE:

$$\frac{dV_C(t)}{dt} + 25\,V_C(t) = 125$$

The complete response is the sum of **natural** and **forced** responses:

$$V_C(t) = Ke^{-25t} + 5$$

Applying the initial condition $V_C(0^+) = 0$, we find $K = -5$.

$$V_C(t) = 5\left(1 - e^{-25t}\right)\,\mathrm{V}$$

Advanced: Transfer Function $H(s)$

Analyzing the circuit as a system mapping $V_s(t) \to V_C(t)$ in the s-**domain**.

The Transfer Function is found via **voltage division** with impedances:

$$H(s) = \frac{V_C(s)}{V_s(s)} = \frac{R_2 \parallel \frac{1}{sC}}{R_1 + \left(R_2 \parallel \frac{1}{sC}\right)}$$

Simplifying and substituting values yields:

$$H(s) = \frac{12.5}{s + \mathbf{25}}$$

The pole is located at $s = -25\,\mathrm{rad/s}$, *which defines the system's cutoff frequency.*

Advanced: Laplace Transform

In the s-**domain**, the input is a step: $V_s(s) = \frac{10}{s}$.

Using Nodal Analysis and solving for $V_C(s)$:

$$V_C(s) = \frac{125}{s(s+25)}$$

Applying **Partial Fraction Expansion**:

$$V_C(s) = \frac{5}{s} - \frac{5}{s+25}$$

$$V_C(t) = 5\left(1 - e^{-25t}\right) u(t) \text{ V}$$

Advanced: State-Space Formulation

For modern control theory, we express the circuit as:

$$\dot{\mathbf{x}}(\mathbf{t}) \;=\; \mathbf{A}\mathbf{x}(\mathbf{t}) + \mathbf{B}\mathbf{u}(\mathbf{t})$$

Let the state variable be $x(t) = V_C(t)$ and the input $u(t) = V_s(t)$.

From the earlier ODE, we directly extract the matrices:

$$\dot{\mathbf{x}}(\mathbf{t}) \;=\; \underbrace{-25}_{\mathbf{A}}\,\mathbf{x}(\mathbf{t}) \;+\; \underbrace{12.5}_{\mathbf{B}}\,\mathbf{u}(\mathbf{t})$$

The eigenvalue of $\mathbf{A}$ *is* $\lambda = -25$.
Since $\lambda < 0$, *the system is strictly stable.*

Advanced: Energy Dynamics

Steady-State Energy Stored ($t \to \infty$):

$$E_C = \frac{1}{2}CV_\infty^2 = \frac{1}{2}(4\,\mu\mathrm{F})(5\,\mathrm{V})^2 = \mathbf{50}\,\mu\mathrm{J}$$

Instantaneous Power Delivered:

$$p_C(t) = V_C(t) \cdot i_C(t)$$

$$p_C(t) = 2.5\left(e^{-25t} - e^{-50t}\right)\,\mathrm{mW}$$

Maximum power transfer occurs at $t = \frac{\ln(2)}{25} \approx \mathbf{27.7}\,\mathrm{ms}$.

Capacitor Voltage – Python I

```
import numpy as np
import matplotlib.pyplot as plt

t = np.linspace(0, 0.2, 1000)
V = 5
tau = 0.04

Vc = V*(1 - np.exp(-t/tau))

plt.plot(t*1000, Vc)
plt.axhline(5, linestyle='--')
plt.show()
```

Capacitor Voltage – C Code I

```
#include <stdio.h>
#include <math.h>

int main(){
   double t, V=5, tau=0.04;

   for(int i=0;i<=200;i++){
      t = i/1000.0;
      double Vc = V*(1-exp(-t/tau));

      printf("%lf %lf\n", t*1000, Vc);
   }
   return 0;
}
```

Capacitor Voltage Plot

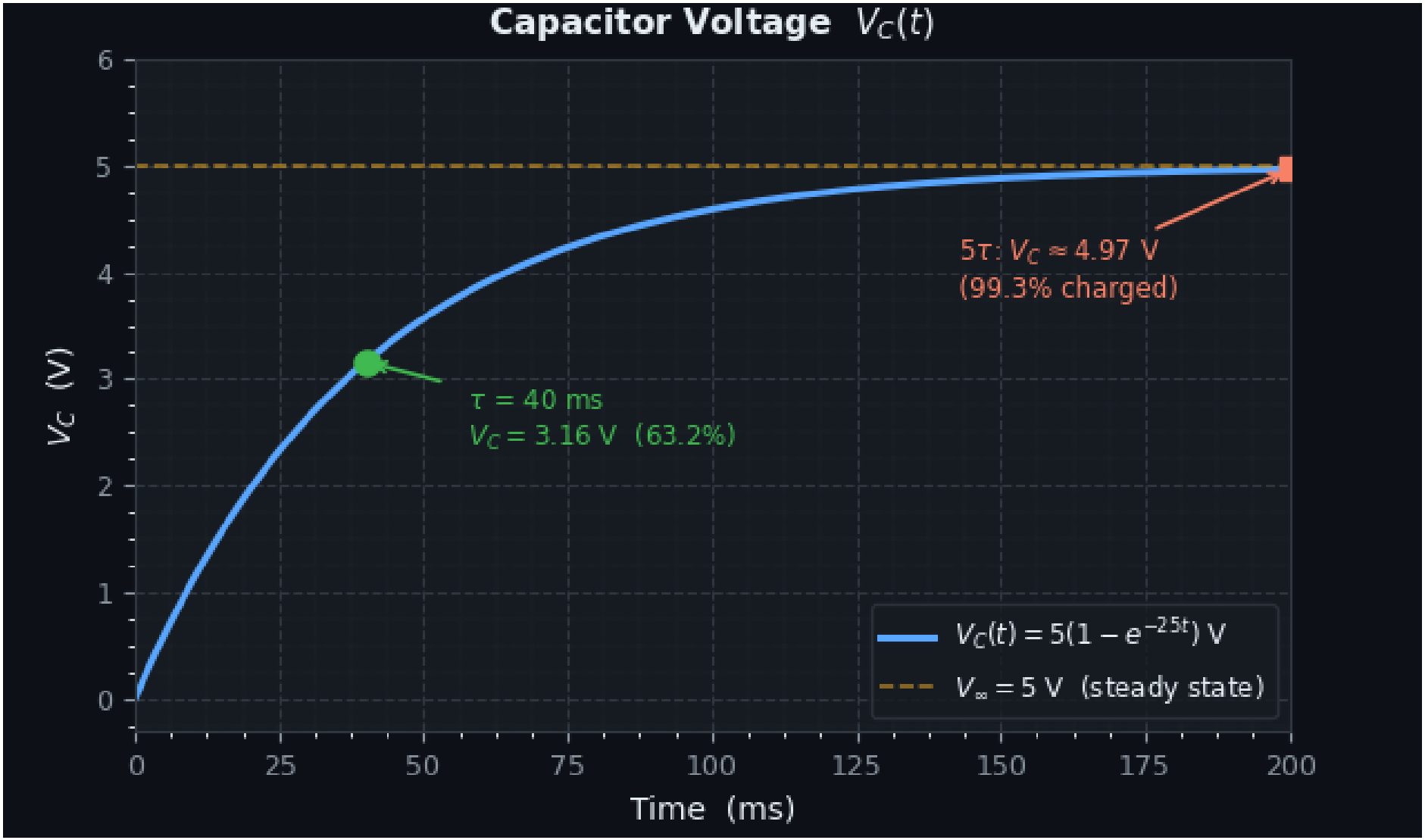

Capacitor Current – Python I

```
import numpy as np
import matplotlib.pyplot as plt

t = np.linspace(0, 0.2, 1000)
V = 5
R = 10000
tau = 0.04

ic = (V/R)*np.exp(-t/tau)*1000

plt.plot(t*1000, ic)
plt.axhline(0, linestyle='--')
plt.show()
```

Capacitor Current – C Code I

```
#include <stdio.h>
#include <math.h>

int main(){
   double t, V=5, R=10000, tau=0.04;

   for(int i=0;i<=200;i++){
      t = i/1000.0;
      double ic = (V/R)*exp(-t/tau)*1000;

      printf("%lf %lf\n", t*1000, ic);
   }
   return 0;
}
```

Capacitor Voltage Plot

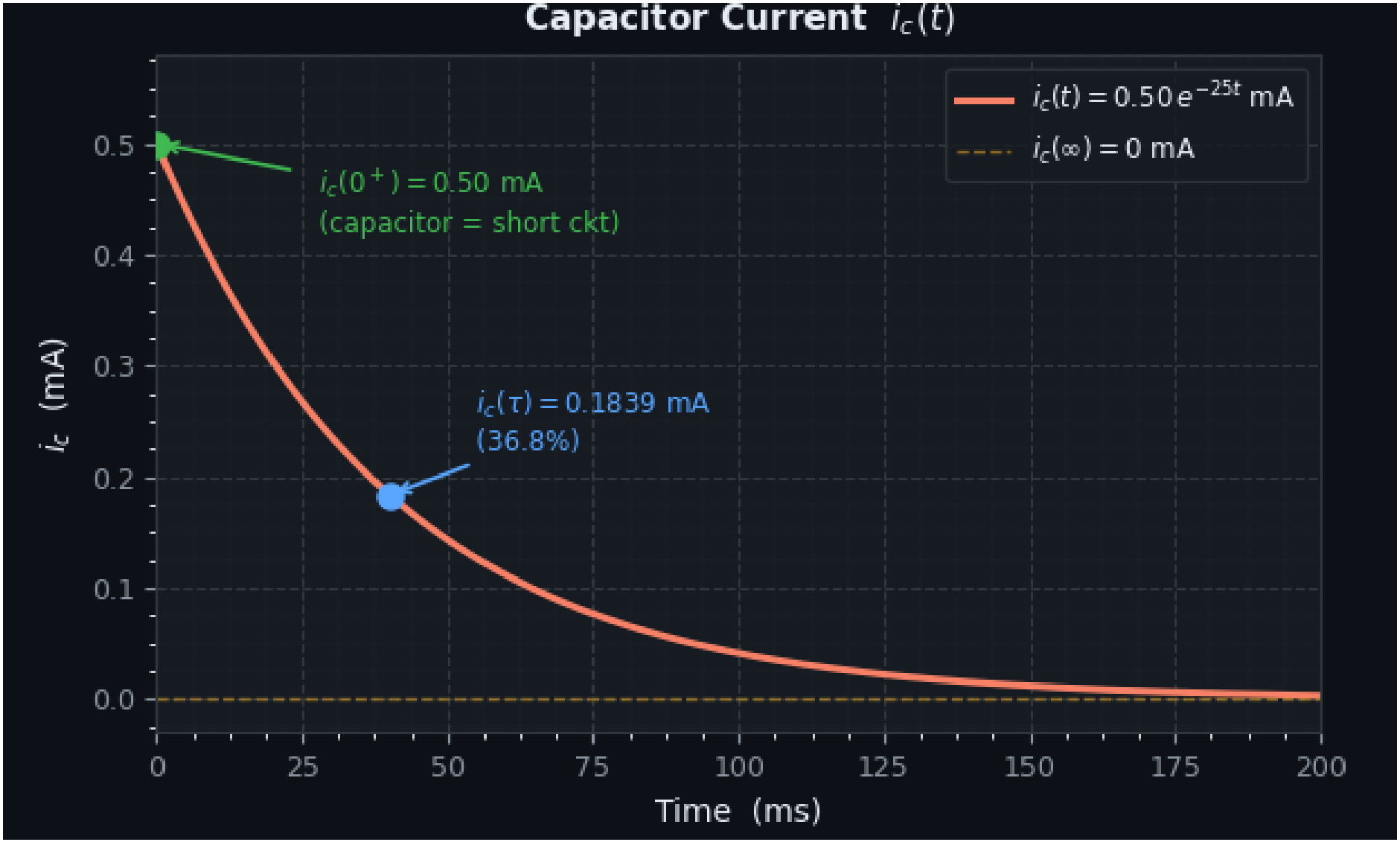

Overlay Plot – Python Code I

```
import numpy as np
import matplotlib.pyplot as plt

t = np.linspace(0, 0.2, 1000)
V = 5
tau = 0.04

Vc = V * (1 - np.exp(-t/tau))
ic = (V/10000) * np.exp(-t/tau) * 1000

fig, ax1 = plt.subplots()

ax1.plot(t*1000, Vc)
ax1.set_xlabel("Time (ms)")
ax1.set_ylabel("Vc (V)")

ax2 = ax1.twinx()
ax2.plot(t*1000, ic, linestyle='--')
ax2.set_ylabel("ic (mA)")

plt.show()
```

Overlay Plot – C Code I

```
#include <stdio.h>
#include <math.h>

int main() {
   double t, V=5, tau=0.04;

   for(int i=0;i<=200;i++){
      t = i/1000.0;
      double Vc = V*(1-exp(-t/tau));
      double ic = (V/10000.0)*exp(-t/tau)*1000;

      printf("%lf %lf %lf\n", t*1000, Vc, ic);
   }
   return 0;
}
```

Capacitor Voltage Plot

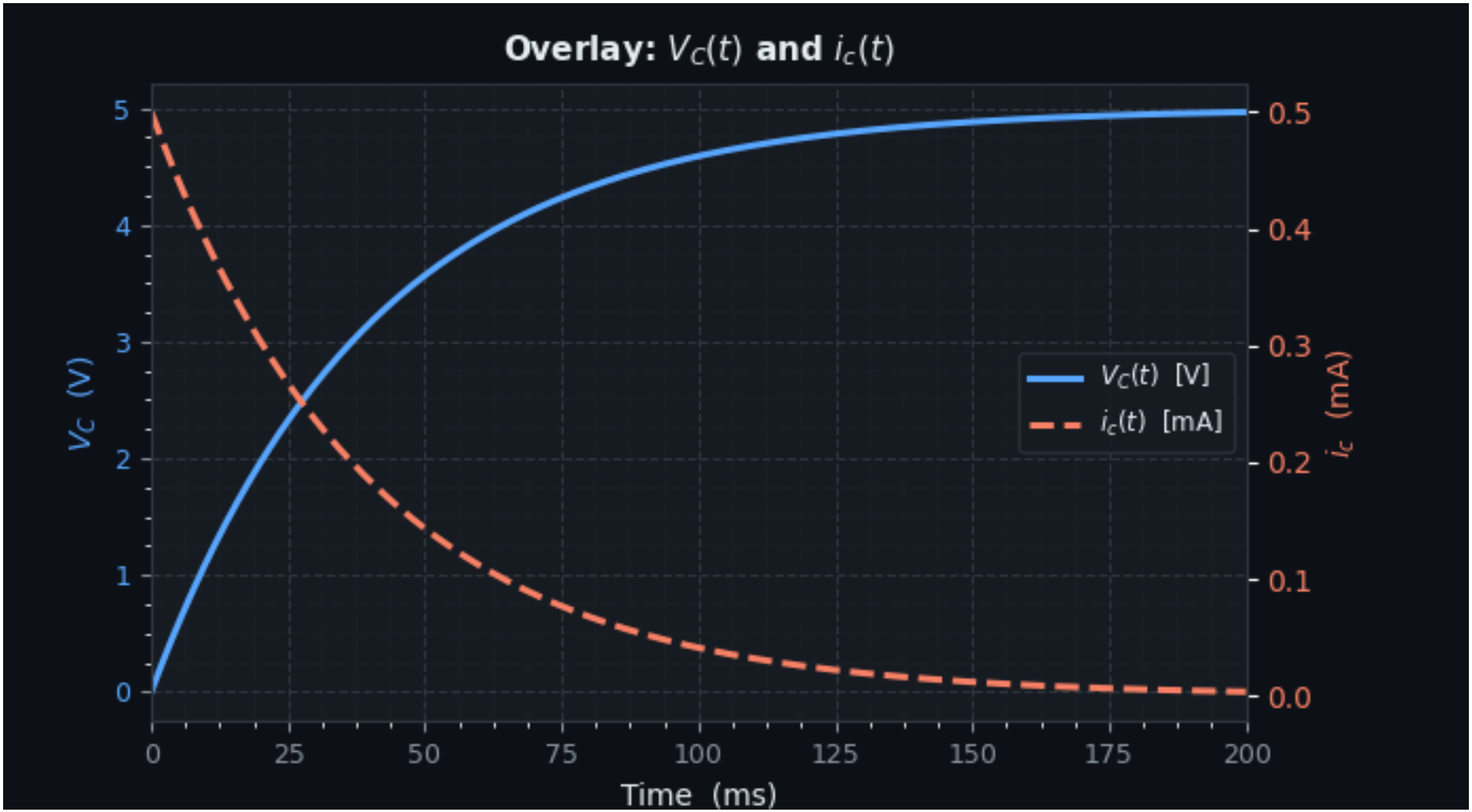

Python Code: Power & Energy (Themed)

```
import numpy as np
import matplotlib.pyplot as plt

t = np.linspace(0, 0.2, 1000)
V = 5
tau = 0.04
C = 4e-6

Vc = V * (1 - np.exp(-t/tau))
ic = (V / 10000) * np.exp(-t/tau)

power_mW = (Vc * ic) * 1000
energy_uJ = (0.5 * C * Vc**2) * 1e6

bg = '#0b1220'
power_color = '#8fd3d1'
energy_color = '#f5e6a8'
```

Python Code: Power & Energy (Themed)

```
fig, ax1 = plt.subplots()
fig.patch.set_facecolor(bg)
ax1.set_facecolor(bg)

ax1.plot(t*1000, power_mW, color=power_color)
ax2 = ax1.twinx()
ax2.plot(t*1000, energy_uJ, color=energy_color)

plt.show()
```

Plot - Power & Energy

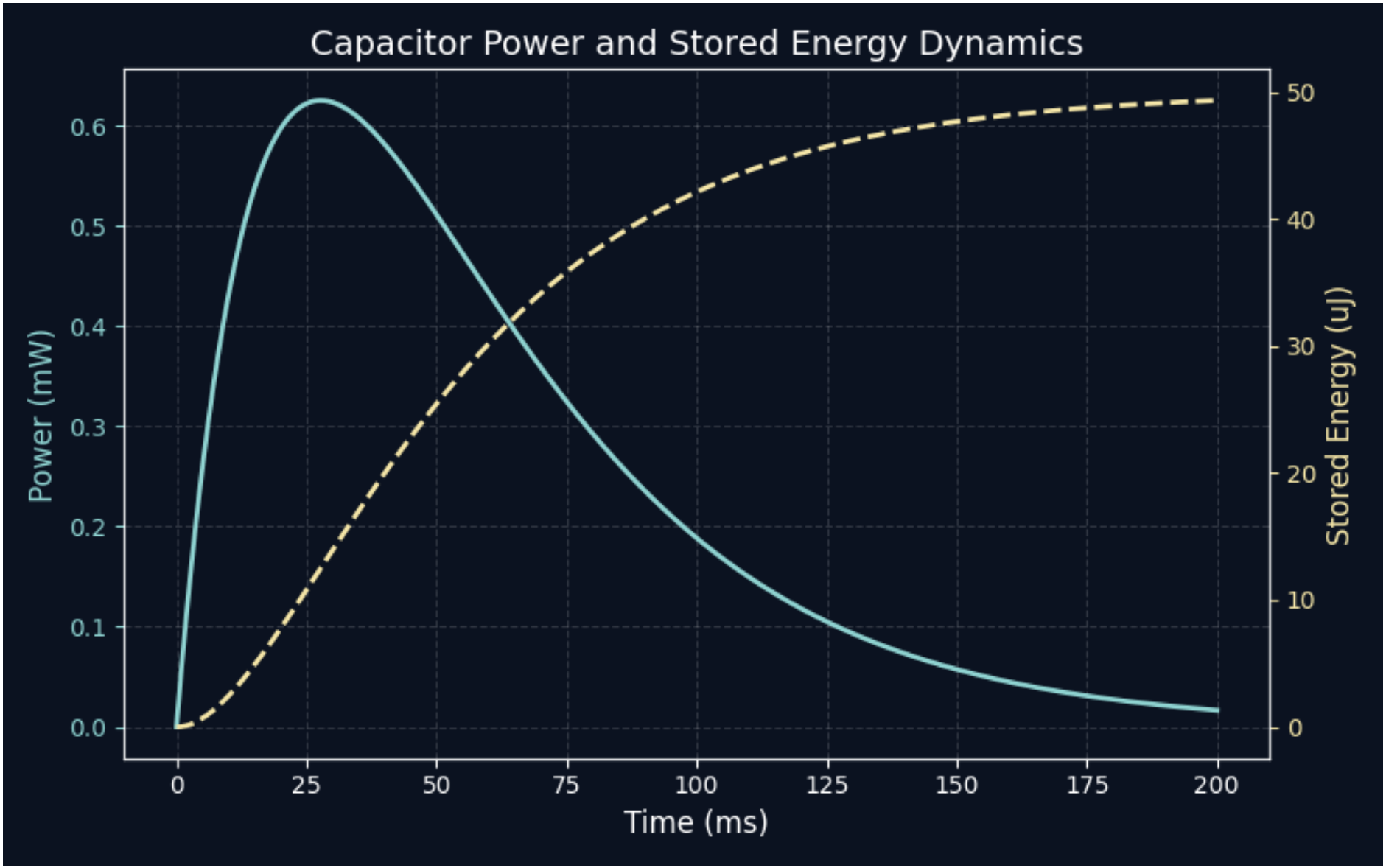

Python Code: Phase Portrait (Themed)

```
import numpy as np
import matplotlib.pyplot as plt

t = np.linspace(0, 0.2, 1000)
V = 5
tau = 0.04

Vc = V * (1 - np.exp(-t/tau))
dVc_dt = (V / tau) * np.exp(-t/tau)

bg = '#0b1220'
curve = '#8fd3d1'
accent = '#f5e6a8'
fig, ax = plt.subplots()
fig.patch.set_facecolor(bg)
ax.set_facecolor(bg)

ax.plot(Vc, dVc_dt, color=curve)
ax.fill_between(Vc, dVc_dt, alpha=0.12)
ax.scatter([0], [125], color=accent)
ax.scatter([5], [0], color=accent)

plt.show()
```

Frame Title

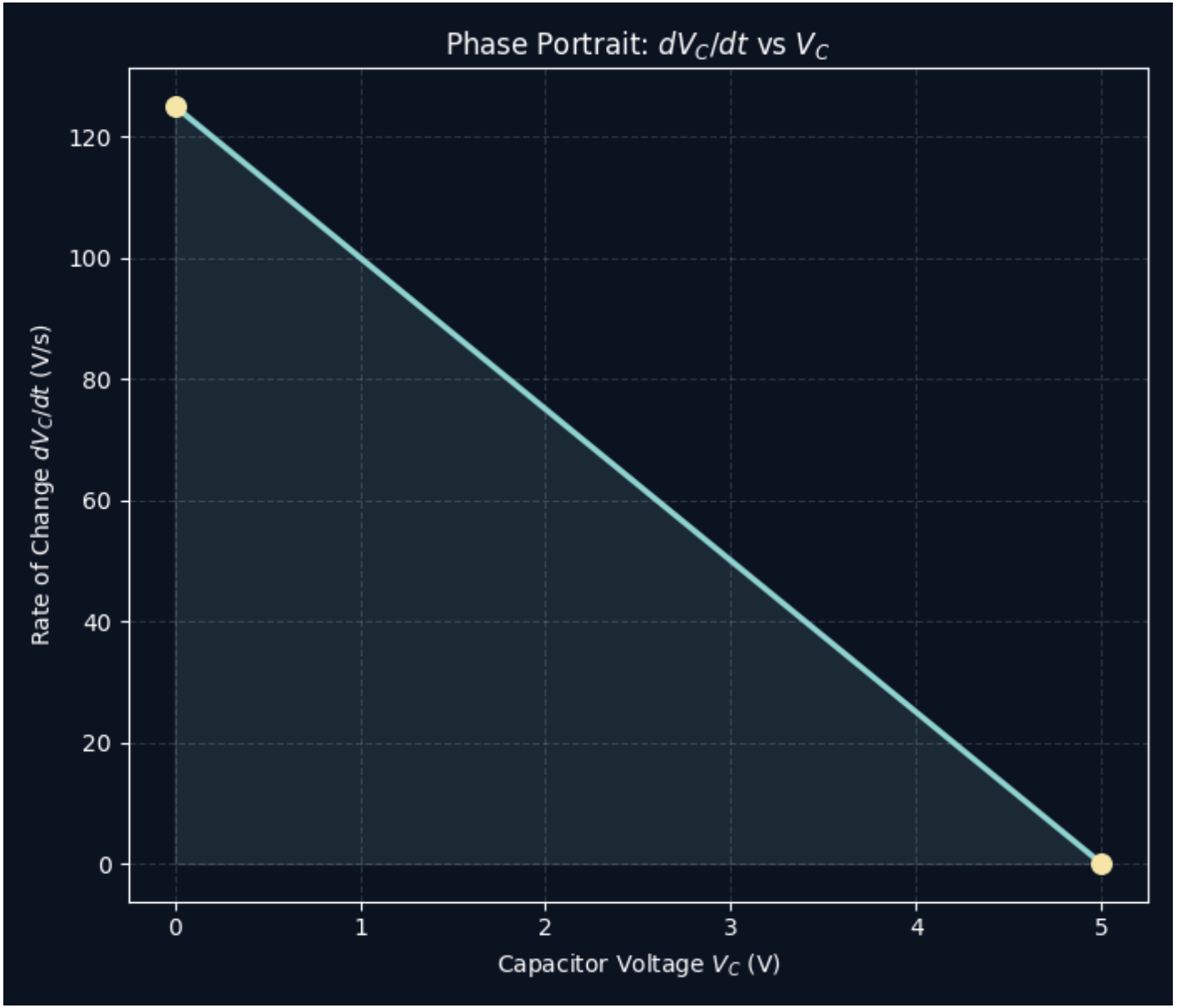
Phase Portrait: dV_C/dt vs V_C
Rate of Change dV_C/dt (V/s)
120
100
80
60
40
20
0
0
1
2
3
4
5
Capacitor Voltage V_C (V)