ISOLATED ±12V AND +5V SUPPLY

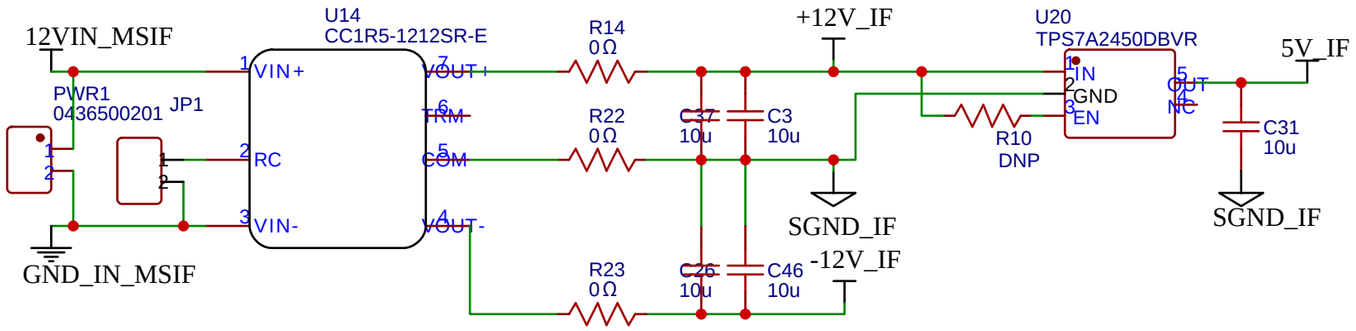

MSIF ANALOG IN // MS ANALOG OUT

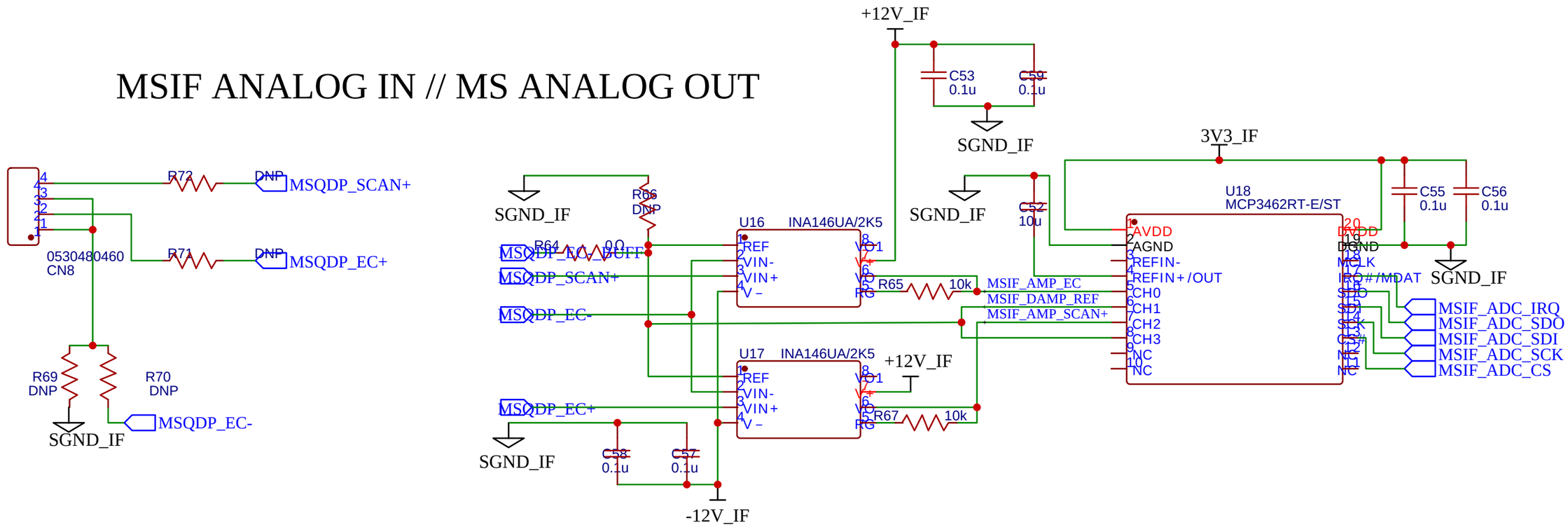

MSIF ISOLATED UART TO MASTER

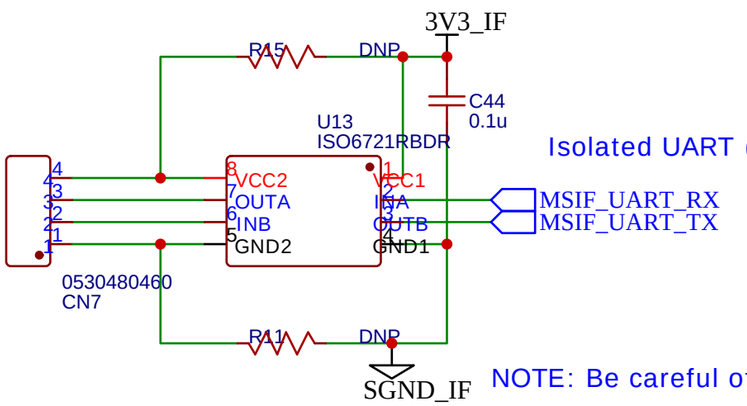

Isolated UART (flipped from ADPC board)

Note: it is not necessary to interface two ISO6721 chips; only one is needed for isolation. However, the supply rails of the opposite transceiver must be available.

NOTE: Be careful of RX/TX when designing other device!

TITLE: Sheet_1	REV: 1.0
EasyEDA Company: Your Company	Sheet: 1/2
Date: 2026-01-20 Drawn By: maxim.laplante	

MSIF DIGITAL OUT // MS DIGITAL IN

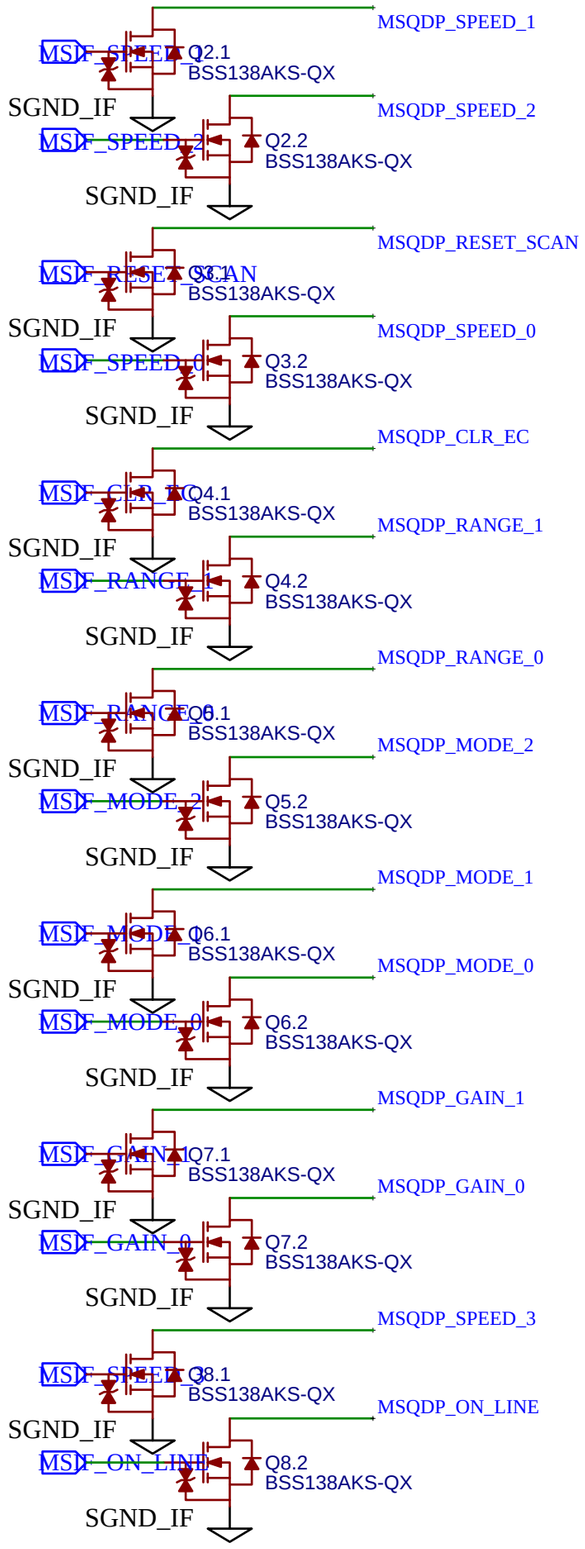

MS QDP CONNECTOR

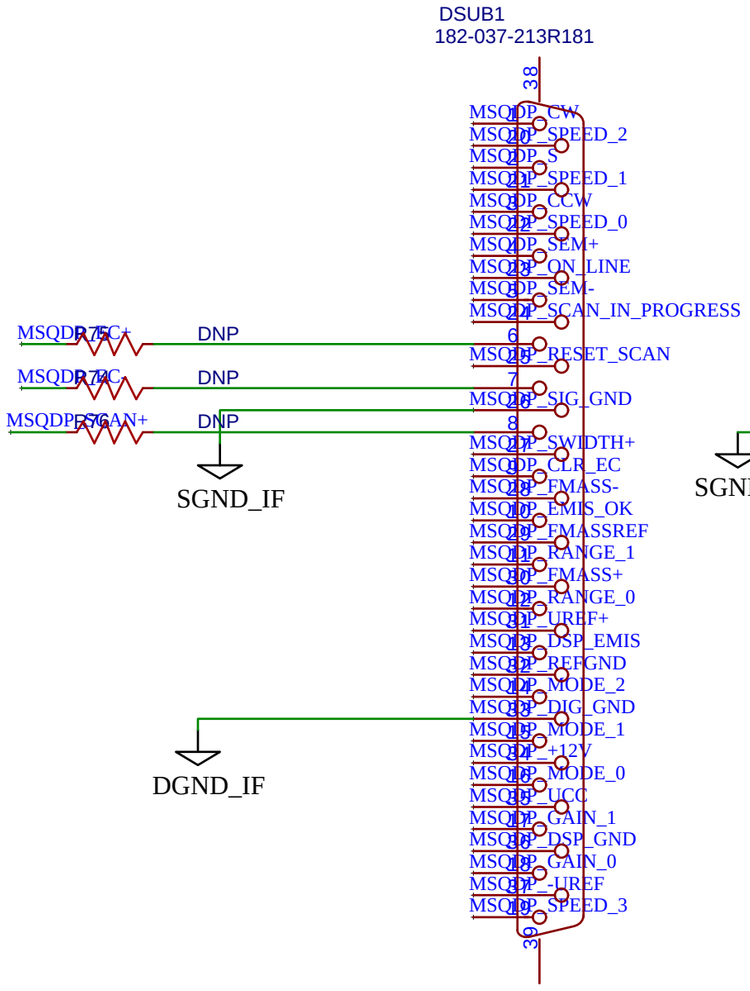

MSIF DIGITAL IN // MS DIGITAL OUT

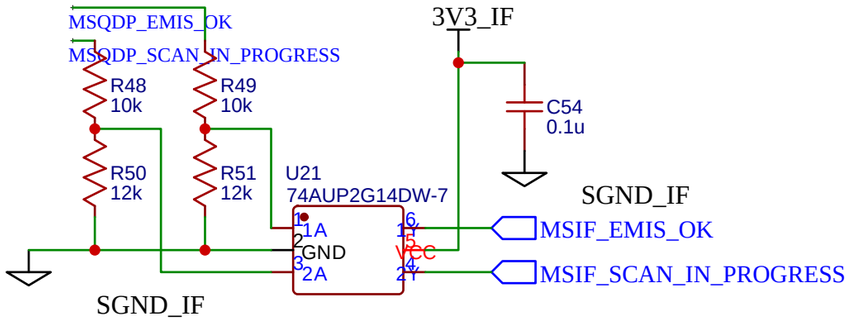

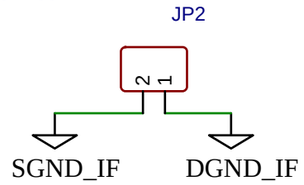

TITLE: MSIF QDP & Digital IO	REV: 1.0
Company: Your Company	Sheet: 2/2
Date: 2026-01-25 Drawn By: maxim.laplante	

MSIF ANALOG OUT // MS ANALOG IN

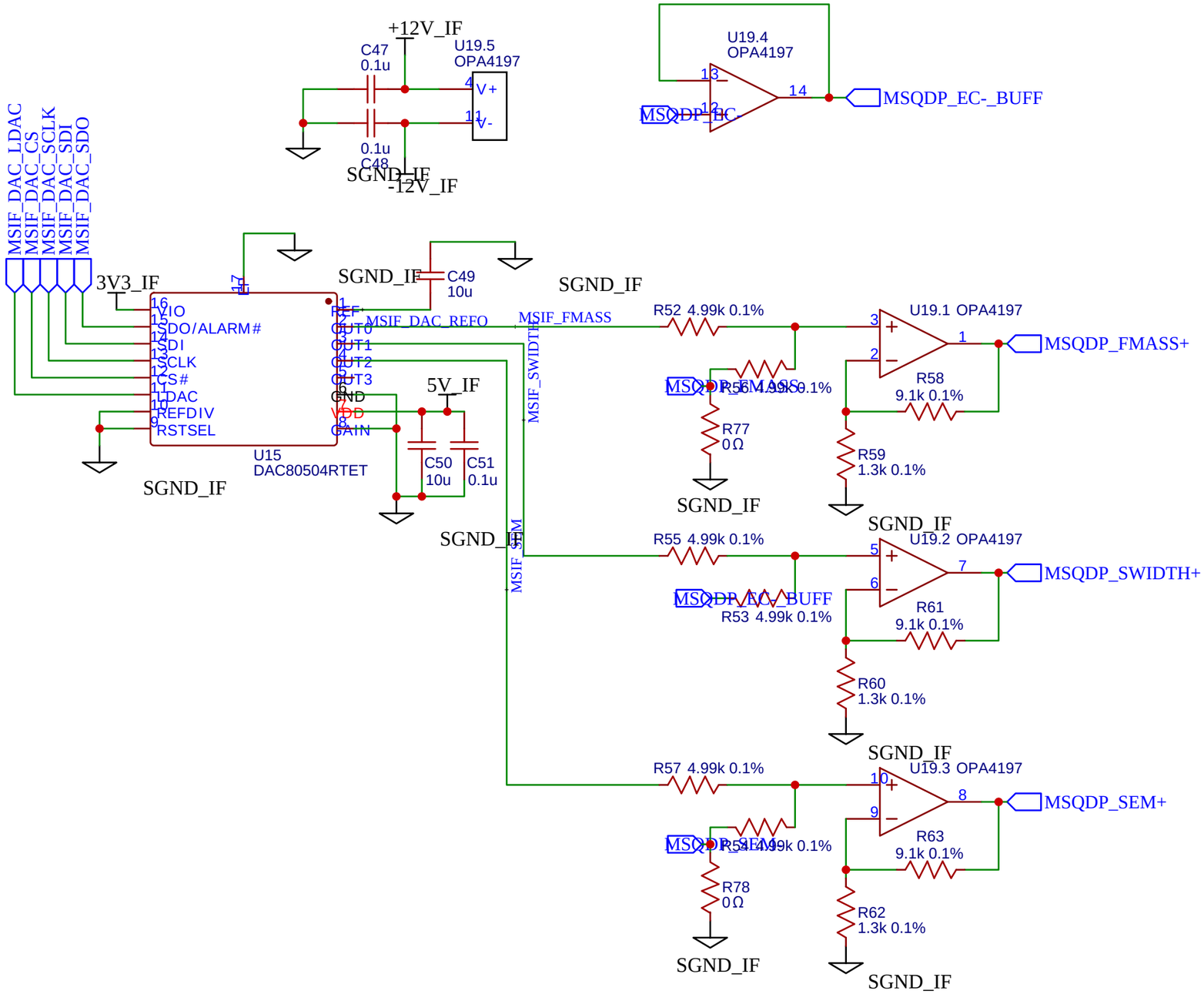

TITLE: Sheet_1	REV: 1.0
Company: Your Company	Sheet: 1/1
Date: 2026-01-25 Drawn By: maxim.laplante	

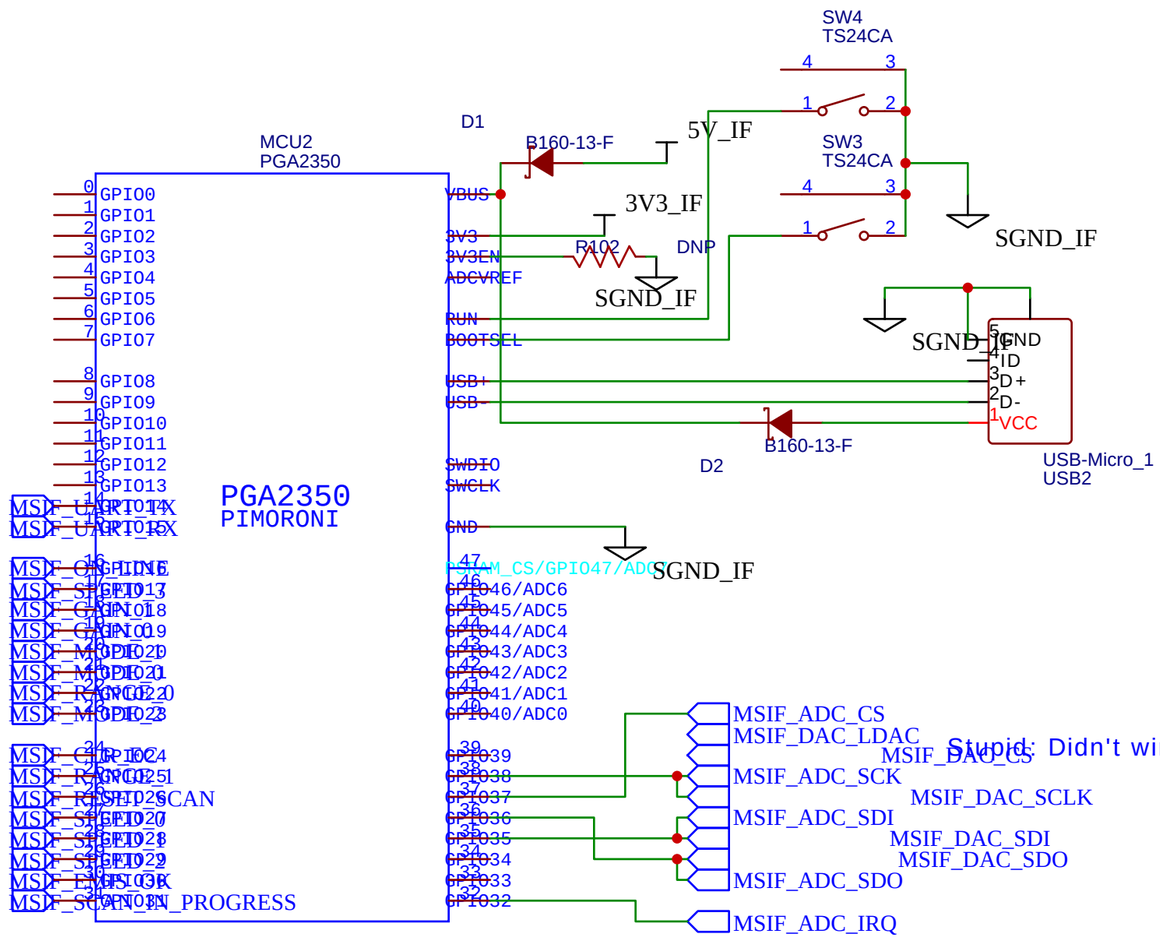

MSIF DIGITAL OUTPUTS

MS

TITLE: Sheet_1		REV: 1.0
EasyEDA	Company: Your Company	Sheet: 1/1
	Date: 2026-01-25 Drawn By: maxim.laplante	