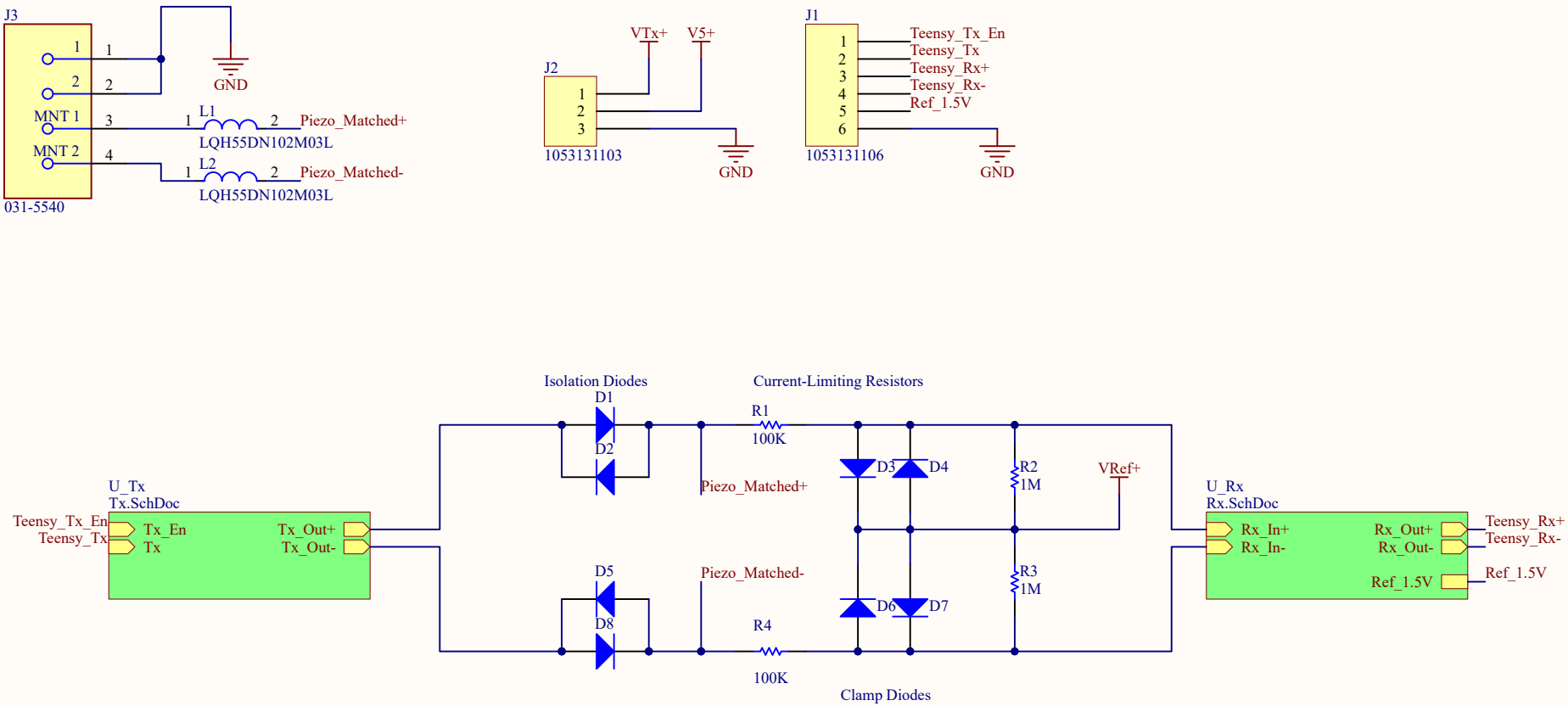

Title TAUV-Modem: Main		
Size A	Number 1	Revision A
Date: 4/10/2023		Sheet of
File: C:\Development\..\Main.SchDoc		Drawn By: Theo Chemel

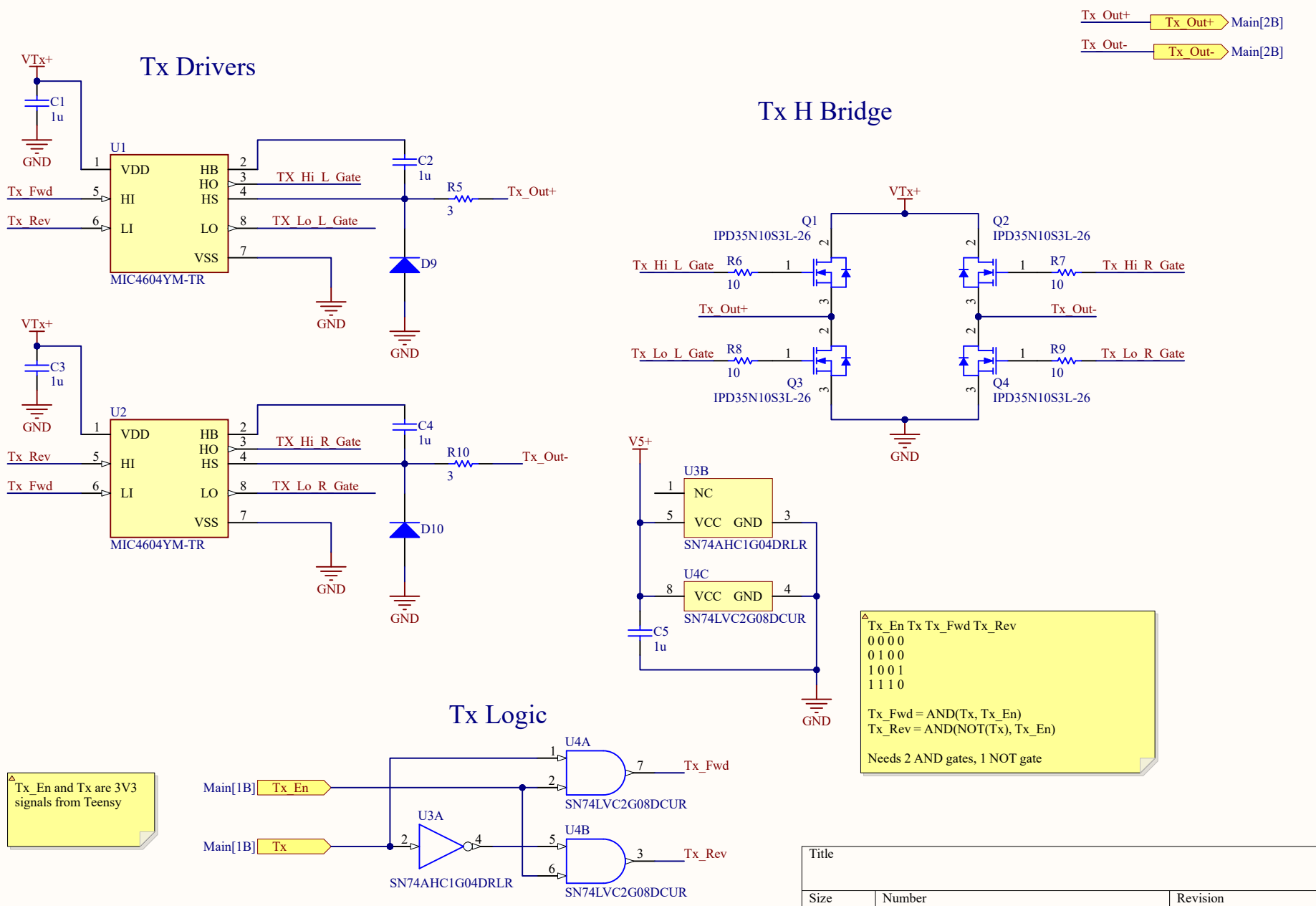
Tx Drivers
VTx+
C1
1u
GND
U1
VDD
HB
HO
HI
HS
LI
LO
VSS
MIC4604YM-TR
Tx_Fwd
Tx_Rev
TX_Hi_L_Gate
TX_Lo_L_Gate
C2
1u
R5
3
Tx_Out+
D9
VTx+
C3
1u
U2
VDD
HB
HO
HI
HS
LI
LO
VSS
MIC4604YM-TR
Tx_Rev
Tx_Fwd
TX_Hi_R_Gate
TX_Lo_R_Gate
C4
1u
R10
3
Tx_Out-
D10
Tx_Out+
Main[2B]
Tx_Out-
Main[2B]
Tx H Bridge
VTx+
Q1
IPD35N10S3L-26
Q2
IPD35N10S3L-26
Tx_Hi_L_Gate
R6
10
R7
10
Tx_Hi_R_Gate
Tx_Out+
Tx_Out-
Tx_Lo_L_Gate
R8
10
R9
10
Tx_Lo_R_Gate
Q3
IPD35N10S3L-26
Q4
IPD35N10S3L-26
V5+
U3B
NC
VCC
GND
SN74AHC1G04DRLR
U4C
VCC
GND
SN74LVC2G08DCUR
C5
1u
Tx_En Tx Tx_Fwd Tx_Rev
0 0 0 0
0 1 0 0
1 0 0 1
1 1 1 0
Tx_Fwd = AND(Tx, Tx_En)
Tx_Rev = AND(NOT(Tx), Tx_En)
Needs 2 AND gates, 1 NOT gate
Tx Logic
Tx_En and Tx are 3V3 signals from Teensy
Main[1B]
Tx_En
Main[1B]
Tx
U4A
Tx_Fwd
SN74LVC2G08DCUR
U3A
SN74AHC1G04DRLR
U4B
Tx_Rev
SN74LVC2G08DCUR
Title
Size
A
Number
Revision
Date: 4/10/2023
Sheet of
File: C:\Development\..\Tx.SchDoc
Drawn By:

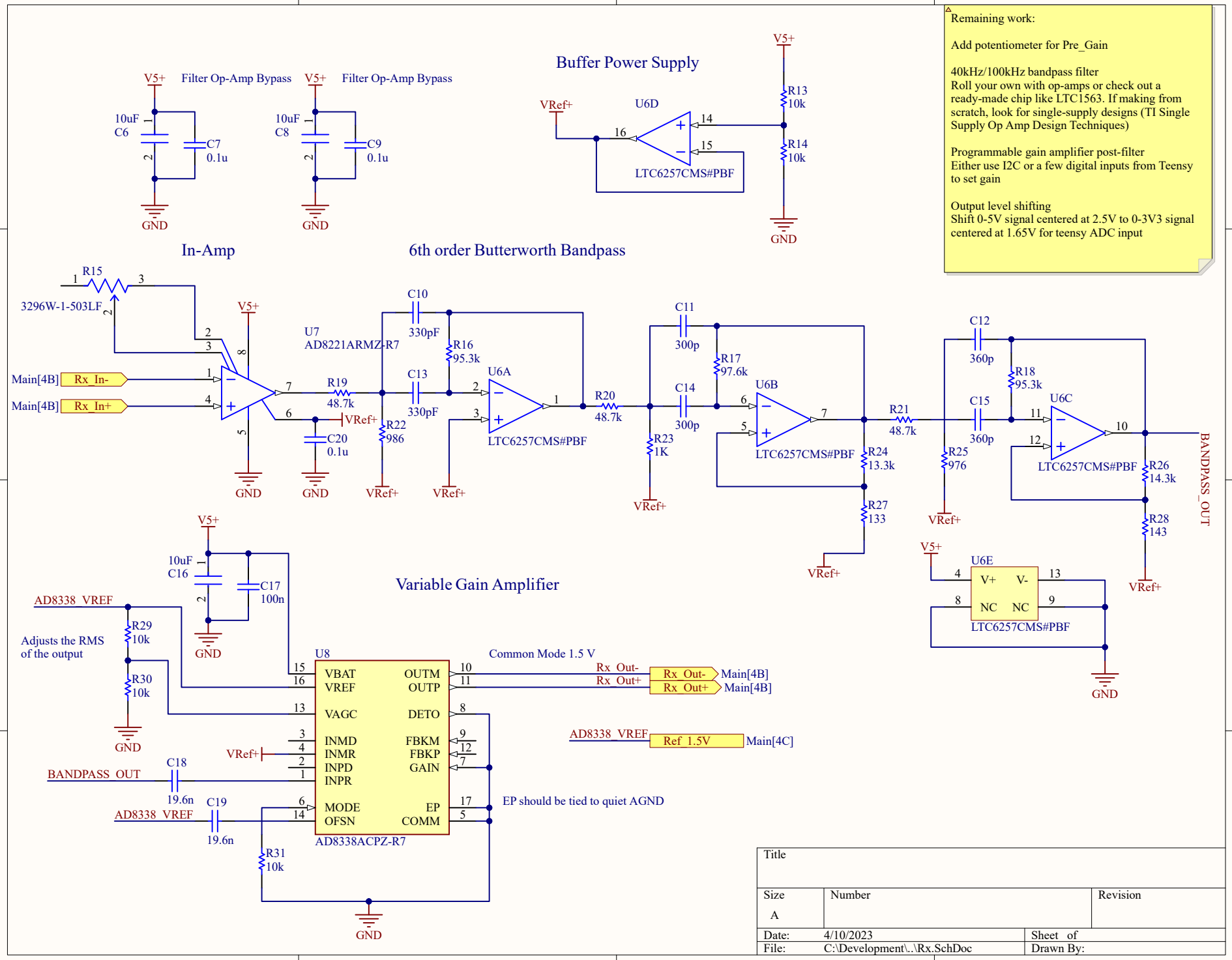
Remaining work:
Add potentiometer for Pre_Gain
40kHz/100kHz bandpass filter
Roll your own with op-amps or check out a ready-made chip like LTC1563. If making from scratch, look for single-supply designs (TI Single Supply Op Amp Design Techniques)
Programmable gain amplifier post-filter
Either use I2C or a few digital inputs from Teensy to set gain
Output level shifting
Shift 0-5V signal centered at 2.5V to 0-3V3 signal centered at 1.65V for teensy ADC input
Filter Op-Amp Bypass
V5+
10uF C6
C7 0.1u
10uF C8
C9 0.1u
GND
Buffer Power Supply
VRef+
U6D
LTC6257CMS#PBF
R13 10k
R14 10k
In-Amp
R15 3296W-1-503LF
U7 AD8221ARMZ-R7
Main[4B] Rx_In-
Main[4B] Rx_In+
R19 48.7k
C20 0.1u
R22 986
6th order Butterworth Bandpass
C10 330pF
R16 95.3k
C13 330pF
U6A
R20 48.7k
C11 300p
C14 300p
R17 97.6k
R23 1K
U6B
R24 13.3k
R27 133
R21 48.7k
C12 360p
C15 360p
R18 95.3k
R25 976
U6C
R26 14.3k
R28 143
BANDPASS_OUT
U6E
NC
Variable Gain Amplifier
AD8338_VREF
R29 10k
R30 10k
Adjusts the RMS of the output
C16 10uF
C17 100n
U8
VBAT
VREF
VAGC
INMD
INMR
INPD
INPR
MODE
OFSN
OUTM
OUTP
DETO
FBKM
FBKP
GAIN
EP
COMM
AD8338ACPZ-R7
Common Mode 1.5 V
Rx_Out-
Rx_Out+
Main[4B]
Ref_1.5V
Main[4C]
BANDPASS_OUT
C18 19.6n
C19 19.6n
R31 10k
EP should be tied to quiet AGND
Title
Size A
Number
Revision
Date: 4/10/2023
Sheet of
File: C:\Development\..\Rx.SchDoc
Drawn By: