Intel Microprocessor and Architecture

Evolution of Intel Microprocessors

Intel Corporation, a pioneer in microprocessor development, introduced its first microprocessor in 1971. Over the years, Intel has continuously improved performance, power efficiency, and functionality.

Introduction to Intel microprocessors

Generation	Microprocessor	Year	Key Features
First Generation	Intel 4004	1971	4-bit processor, 740 kHz clock speed, used in calculators and embedded systems
Second Generation	Intel 8080	1971	8-bit processor, first general-purpose microprocessor, used in early PCs.
Third Generation	Intel 8086 & 8088	1978-79	16-bit processing, up to 10 MHz clock speed, IBM PC used 8088
Fourth Generation	Intel 8086 & 8088	1982	Introduced protected mode, enabled multitasking, used in IBM AT computers.
Fifth Generation	Intel 80386	1985	First full 32-bit processor, supported virtual memory and multitasking.
Sixth Generation	Intel 80486	1989	Integrated Floating Point Unit (FPU), built-in math coprocessor for faster calculations.
Seventh Generation	Intel Pentium Series	1993-2000s	Integrated Floating Point Unit (FPU), built-in math coprocessor for faster calculations.
Eighth Generation	Intel Core Series (i3, i5, i7, i9)	2006-Present	High-performance computing, Hyper-Threading, Turbo Boost technology.
High-Performance & Server	Intel Xeon & Core X-Series	2008-Present	Designed for workstations, AI, cloud computing, and deep learning.
Latest Hybrid Architecture	Intel Alder Lake & Raptor Lake	2021-Present	Combines high-performance & efficiency cores, supports DDR5 & PCIe 5.0.

8086 Microprocessor Architecture

The **Intel 8086** microprocessor, introduced in **1978**, is a **16-bit** processor that laid the foundation for the **x86 architecture**, which is still used in modern computing. It has a **20-bit address bus**, allowing it to access **1 MB of memory**.

The **8086 architecture** consists of two main units:

1. **Bus Interface Unit (BIU)** – Handles memory and I/O operations.
2. **Execution Unit (EU)** – Performs arithmetic and logical operations.

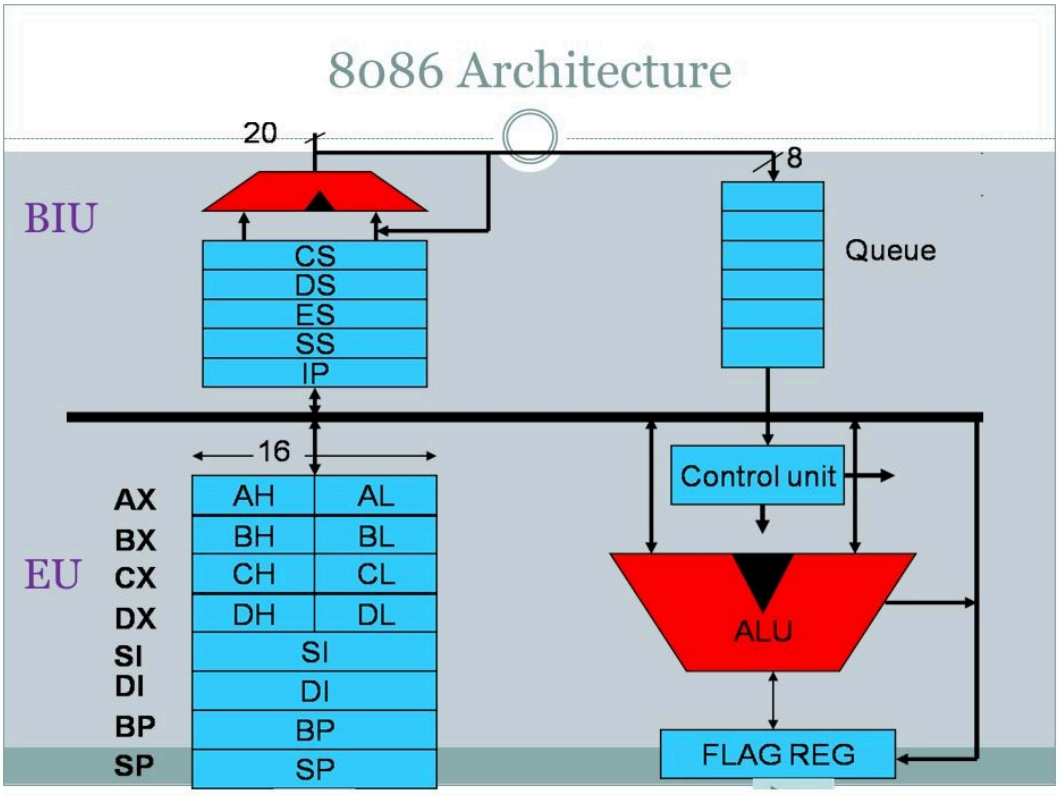

Functional Units

A. Bus Interface Unit (BIU)

The **BIU handles data transfer** between the processor and memory/peripheral devices. It works with:

- **Instruction queue** (supports prefetching for pipelining)
- **Segment registers** (for memory segmentation)
- **Addressing and control signals** (to interact with external buses)

B. Execution Unit (EU)

The **EU executes instructions** received from the instruction queue. It consists of:

- **Arithmetic Logic Unit (ALU)** – Performs arithmetic and logical operations.
- **General-purpose registers** – Used for storing operands and results.
- **Flag register** – Stores status flags based on ALU operations.
- **Control unit** – Decodes and executes instructions.

Registers in 8086

The **8086 has a total of 14 registers**, divided into four categories:

A. General Purpose Registers (16-bit)

Used for arithmetic and data transfer operations.

- **AX register** – It is also known as accumulator register. It is used to store operands for arithmetic operations.
- **BX register** – It is used as a base register. It is used to store the starting base address of the memory area within the data segment.
- **CX register** – It is referred to as counter. It is used in loop instruction to store the loop counter.
- **DX register** – This register is used to hold I/O port address for I/O instruction.

B. Segment Registers (16-bit)

Used for memory segmentation.

- **CS (Code Segment Register)** – Holds the segment address of the code.
- **DS (Data Segment Register)** – Holds the segment address of data.
- **SS (Stack Segment Register)** – Holds the segment address of the stack.
- **ES (Extra Segment Register)** – Additional segment for data storage.

C. Pointer and Index Registers (16-bit)

Used for memory addressing.

- **SP (Stack Pointer)** – Points to the top of the stack.
- **BP (Base Pointer)** – Used for accessing stack data.
- **SI (Source Index Register)** – Used in string operations.
- **DI (Destination Index Register)** – Used in string operations.

D. Flag Register (16-bit)

Contains **status flags** that reflect the result of operations:

- **Carry Flag (CF)**
- **Parity Flag (PF)**
- **Auxiliary Carry Flag (AF)**
- **Zero Flag (ZF)**
- **Sign Flag (SF)**
- **Trap Flag (TF)**
- **Interrupt Enable Flag (IF)**
- **Direction Flag (DF)**
- **Overflow Flag (OF)**

Flag Register

It is a 16-bit register that behaves like a flip-flop, i.e. it changes its status according to the result stored in the accumulator. It has 9 flags and they are divided into 2 groups − Conditional Flags and Control Flags.

Conditional Flags

It represents the result of the last arithmetic or logical instruction executed. Following is the list of conditional flags −

Carry flag − This flag indicates an overflow condition for arithmetic operations.

Auxiliary flag − When an operation is performed at ALU, it results in a carry/barrow from lower nibble (i.e. D0 – D3**) to upper nibble** (i.e. D4 – D7), then this flag is set, i.e. carry given by D3 bit to D4 is AF flag. The processor uses this flag to perform binary to BCD conversion.

Parity flag − This flag is used to indicate the parity of the result, i.e. when the lower order 8-bits of the result contains even number of 1's, then the Parity Flag is set. For odd number of 1's, the Parity Flag is reset.

Zero flag − This flag is set to 1 when the result of arithmetic or logical operation is zero else it is set to 0.

Sign flag − This flag holds the sign of the result, i.e. when the result of the operation is negative, then the sign flag is set to 1 else set to 0.

Overflow flag − This flag represents the result when the system capacity is exceeded.

Control Flags

Control flags controls the operations of the execution unit. Following is the list of control flags −

Trap flag − It is used for single step control and allows the user to execute one instruction at a time for debugging. If it is set, then the program can be run in a single step mode.

Interrupt flag − It is an interrupt enable/disable flag, i.e. used to allow/prohibit the interruption of a program. It is set to 1 for interrupt enabled condition and set to 0 for interrupt disabled condition.

Direction flag − It is used in string operation. As the name suggests when it is set then string bytes are accessed from the higher memory address to the lower memory address and vice-a-versa.

Memory Segmentation in 8086

The **8086 uses a segmented memory model**, dividing memory into **64 KB segments**. A **physical address** is generated using **segment registers** and **offsets**.

Formula: Physical Address=Segment Address×16+Offset Address

Each segment is 64 KB and has four types:

1. **Code Segment (CS)**
2. **Data Segment (DS)**
3. **Stack Segment (SS)**
4. **Extra Segment (ES)**

Instruction Queue and Pipelining

- The 8086 supports a 6-byte instruction queue.
- It pre-fetches instructions to improve execution speed (pipelining).
- This means while one instruction is being executed, the next instruction is already being fetched.

Interrupt System

8086 supports two types of interrupts:

1. Hardware Interrupts
    - NMI (Non-Maskable Interrupt) – High priority, cannot be disabled.
    - INTR (Interrupt Request) – Can be enabled/disabled.
2. Software Interrupts
    - INT n (Interrupt instruction) – Calls an interrupt routine.
    - Single-step (Trap flag enabled) – Debugging mode.

Addressing Modes in 8086

The **8086 supports various addressing modes** for flexibility in instruction execution:

1. **Immediate Addressing** – Operand is part of the instruction.
2. **Register Addressing** – Operands are in registers.
3. **Direct Addressing** – Memory address is given directly.
4. **Indirect Addressing** – Address stored in a register.
5. **Indexed Addressing** – Uses SI or DI with an offset.
6. **Base Indexed Addressing** – Uses BX or BP with an index.

8086 Microprocessor Pin Configuration

The **Intel 8086** microprocessor is a **16-bit processor** with a **40-pin Dual In-Line Package (DIP)**. It operates in **two modes**:

1. **Minimum Mode (Single Processor System)**
2. **Maximum Mode (Multiprocessor System)**

Pin Diagram of 8086

The **40 pins** of the 8086 are categorized as follows:

- **Power and Clock Pins**
- **Address and Data Bus**
- **Control and Status Signals**
- **Interrupt and DMA Signals**
- **Minimum/Maximum Mode Signals**

1. **Power and Clock Pins**

Pin	Symbol	Function
40	VCC	+5V power supply
1, 20	GND	Ground
19	CLK	Clock input (5-10 MHz)

2. Address and Data Bus Pins

Pin	Symbol	Function
2-16	AD0 - AD15	Multiplexed Address/Data Bus
21-24	A16 - A19 / S3 - S6	Higher Address Lines & Status Signals

---

3. Control and Status Signals

Pin	Symbol	Function
17	BHE / S7	Bus High Enable / Status Signal
25	RD	Read Control (Active LOW)
28	WR	Write Control (Active LOW)
29	MN/MX	Selects Minimum (HIGH) or Maximum (LOW) Mode
26	READY	Insert Wait States for Slow Devices
27	INTR	Interrupt Request
18	TEST	Wait until TEST pin = 0
33	RESET	Resets the Processor

---

4. Interrupt and DMA Control Signals

Pin	Symbol	Function
32	NMI	Non-Maskable Interrupt (High Priority)
31	INTA	Interrupt Acknowledge
30	HOLD	DMA Request by External Devices
34	HLDA	Hold Acknowledge (HOLD Request Granted)

---

5. Minimum Mode Signals (MN/MX = 1)

Pin	Symbol	Function
35	M/IO	Memory (1) or I/O (0) Operation
36	INTA	Interrupt Acknowledge (Active LOW)
37	ALE	Address Latch Enable
38	DT/R	Data Transmit/Receive Control
39	DEN	Data Enable (Enables Data on Bus)

---

6. Maximum Mode Signals (MN/MX = 0)

Pin	Symbol	Function
35	S2	Status Signal
36	S1	Status Signal
37	S0	Status Signal
38	LOCK	Locks the Bus for Critical Operations
39	RQ/GT1, RQ/GT0	Request/Grant for Bus Arbitration

Pin Diagram of 8086 Microprocessor

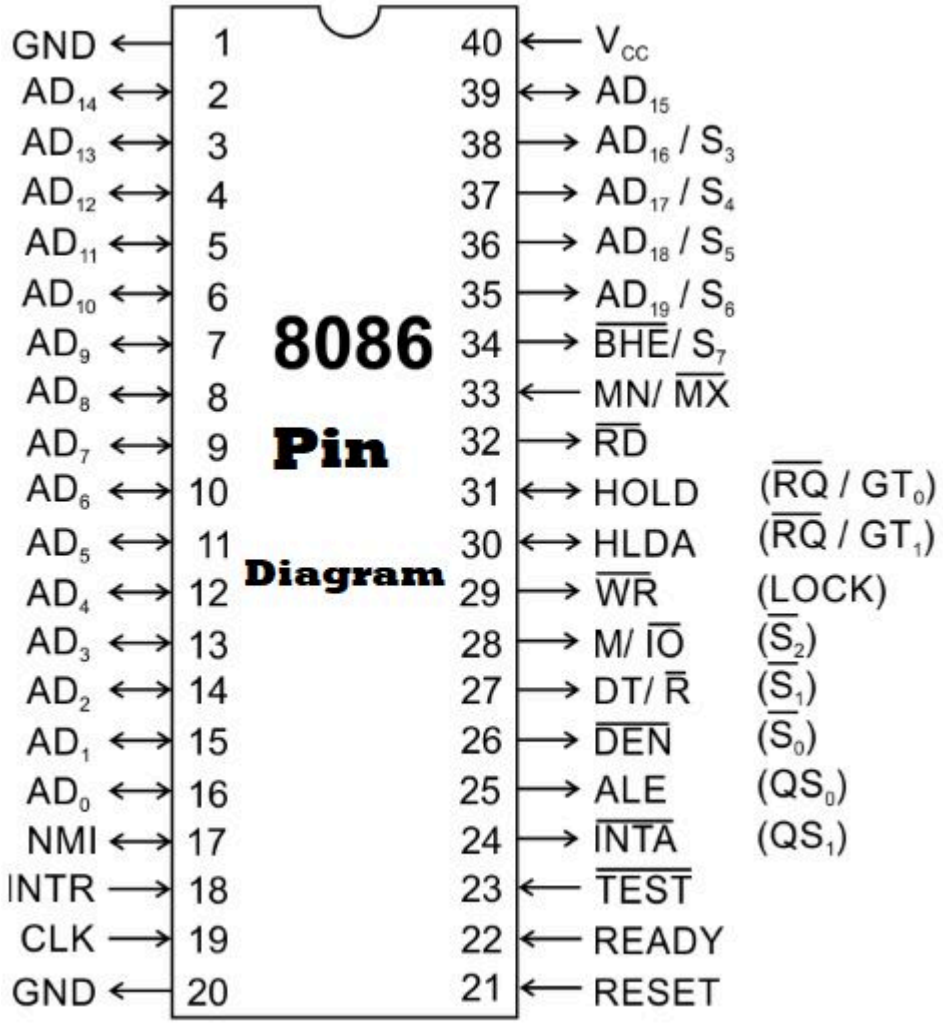

The Basic Architecture of the Intel 8088

Below is a block diagram of the organizational layout of the Intel 8088 processor. It includes two main sections: the Execution Unit (EU) and the Bus Interface Unit (BIU). The EU takes care of the processing including arithmetic and logic. The BIU controls the passing of information between the processor and the devices outside of the processor such as memory, I/O ports, storage devices, etc.

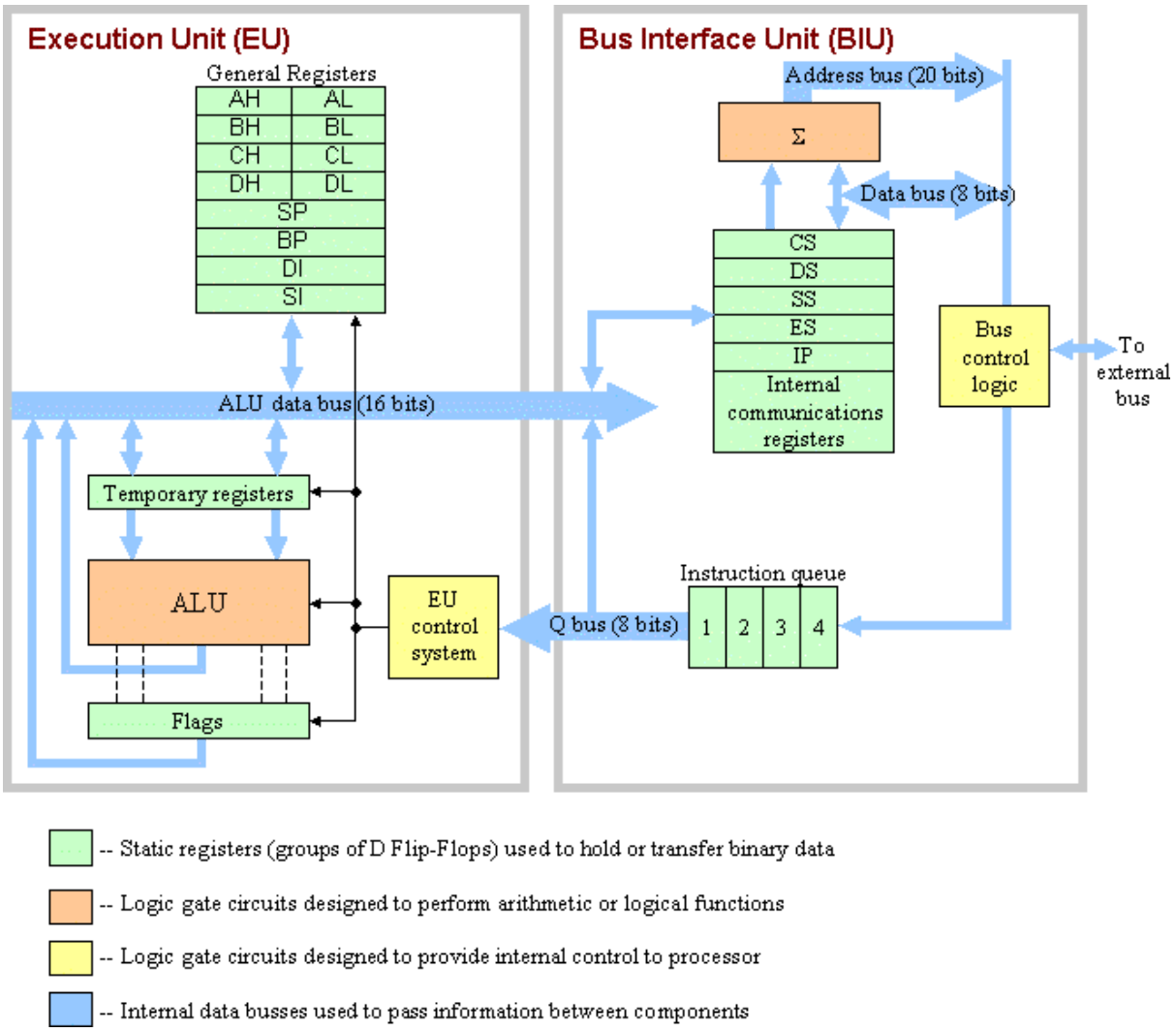

General Registers

The general registers are categorized into two sets: data and address. The data registers are for calculations; the address registers contain memory addresses and are used to point to the locations in memory where data will be retrieved or stored.

Examining the diagram shows that there are four pairs of registers at the top labeled AH, AL, BH, BL, CH, CL, DH, and DL. These are the data registers. Each of these registers is 8 bits long. Each pair, however, can also operate as a single 16 bit register. AH and AL can operate as a pair referred to as AX. This combining of registers is simply a concatenation, the 8 bits of AL simply tacked to the end of the 8 bits of AH. For example, if AH contains 10110000_2 ($B0_{16}$) and AL contains 01011111_2 ($5F_{16}$), then the virtual register AX contains 1011000001011111_2 ($B05F_{16}$).

Example: If CX contains the binary value 0110 1101 0110 1011_2, what value does CH have?

Answer: CH contains 0110 1101_2.

Intel has given each of these computational registers a name. These names are listed below:

- AX - Accumulator register
- BX - Base register
- CX - Counter register
- DX - Data register

Below the data registers in the block diagram are the address registers: SP, BP, DI, and SI. These are officially referred to as the pointer (SP and BP) and index registers (DI and SI). These registers are used with the segment registers to point to specific addresses in the memory space of the processor. We will address their operation in the section on the segment registers. It is sufficient at this point to say that they act like pointers in the programming language C or C++. Their basic function is as follows:

- SP is the stack pointer and it points to the "top plate" or last piece of data placed on the stack.
- BP (base pointer), SI (source index), and DI (destination index) are all pointers that the programmer has for their own u**se.**

The Flags

That number is the *flags register* shown at the bottom of the EU section of the processor diagram. The individual bits of the flags are arranged as shown in the figure below:

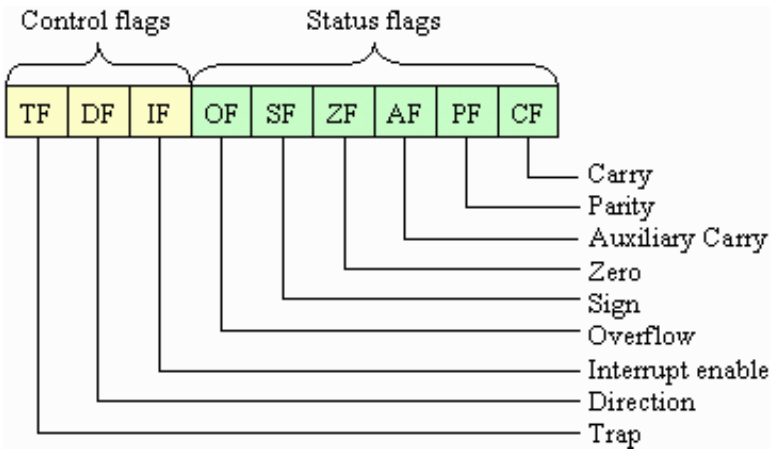

The group of flags in the figure identified as *control flags* are used to control how the processor runs. These are typically controlled by the user's software. The group of flags in the figure identified as *status flags* are usually set by the previous operation as in our addition example.

Example: **If you were to add the binary number 10110101_2 and 10010110_2, how would the flags be set?**

Answer: First, let's add the two numbers to see what the result is.

1 0 1 1 0 1 0 1

+ 1 0 0 1 0 1 1 0

1 0 1 0 0 1 0 1 1

Now just go from left to right through the status flags.

- OF=1 -- There was an overflow, i.e., adding two negative numbers resulted in a positive number.
- SF=0 -- The result is positive.
- ZF=0 -- The result does not equal zero.
- AF=0 -- For now we won't worry about the auxiliary flag.
- PF=0 -- For now we won't worry about the parity flag.
- CF=1 -- There was a carry.

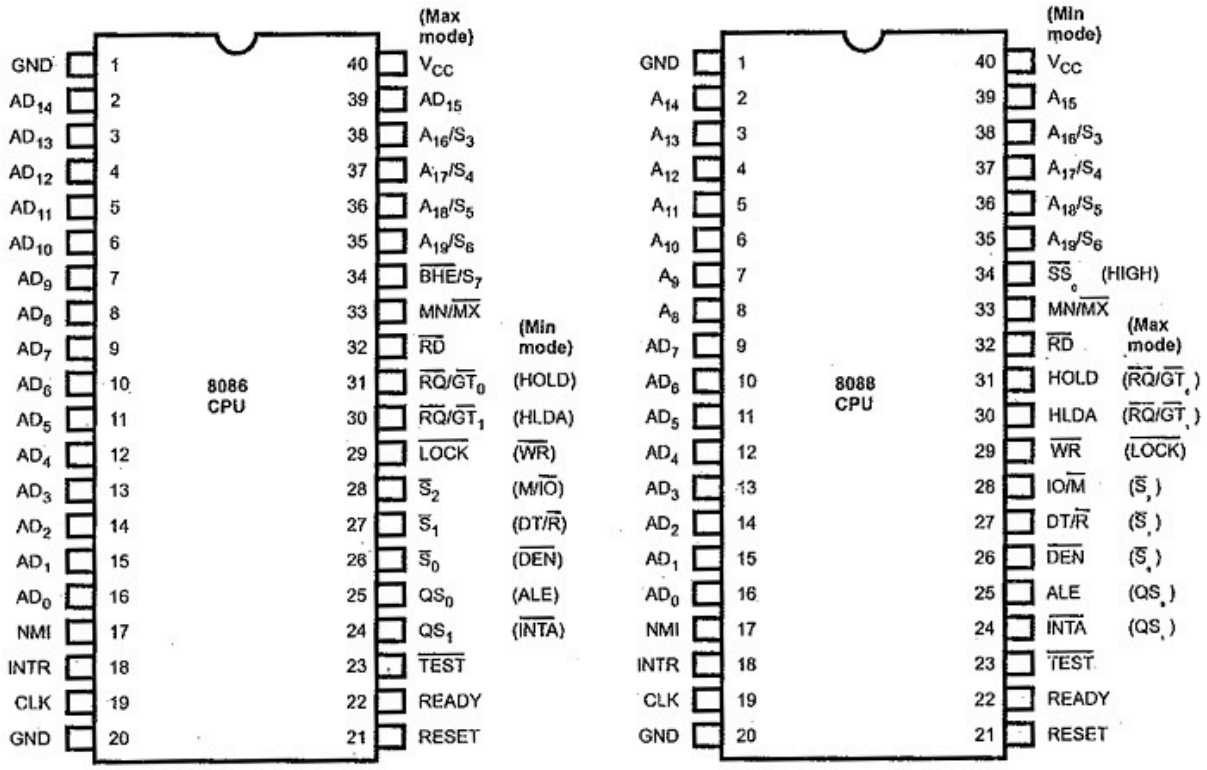

(a) Pin diagram of 8086 Fig. 10.1 (b) Pin diagram of 8088

Pin Differences in 8086 and 8088

Pin No.	8086 Microprocessor	8088 Microprocessor	Difference
AD0–AD15	**16-bit multiplexed address/data bus**	**8-bit multiplexed address/data bus (AD0–AD7)**	8086 has a **16-bit bus**, 8088 has an **8-bit bus**
A8–A19	Address-only lines	Address-only lines	Same in both
Pin 34 (BHĒ / S7)	**BHĒ (Bus High Enable)** – Enables higher byte (D8–D15)	**S7 (Status Signal)** – Used for internal status	**8086 uses BHĒ, but 8088 doesn't need it (8-bit bus)**
Pin 28 (IO/M̄ or SSO)	**IO/M̄ (I/O or Memory Access Signal)**	**SSO (Status Output Signal)**	In 8086, **IO/M̄ differentiates between memory & I/O operations**, while 8088 uses **SSO for additional status signals**
Instruction Queue Size	6 bytes	4 bytes	Smaller queue in 8088 due to 8-bit bus
Minimum/Maximum Mode Pins	Same as 8088	Same as 8086	No difference in min/max mode signals

Minimum and maximum mode of 8086 and 8088

Feature	8086 Minimum Mode	8088 Minimum Mode	8086 Maximum Mode	8088 Maximum Mode
Data Bus Width	16-bit	8-bit	16-bit	8-bit
Instruction Queue	6 bytes	4 bytes	6 bytes	4 bytes
Bus High Enable ($\overline{BHE}$)	Used for 16-bit memory	Not present	Used for 16-bit memory	Not present
Status Pin (S7)	Not available	Used instead of $\overline{BHE}$	Not available	Used instead of $\overline{BHE}$
Control Signals in Min Mode	IO/$\overline{M}$, $\overline{WR}$, $\overline{RD}$	IO/$\overline{M}$, $\overline{WR}$, $\overline{RD}$	S2, S1, S0	S2, S1, S0

Advantages of 8088 Microprocessor

- Cost Efficiency: This design is easier and cheaper to implement because an 8-bit data bus is easier to handle and needs cheaper/B cheaper components and memory.
- Compatibility: In its turn, 8088 is compatible with 8-bit peripheral chips, which were cheaper and more numerous in comparison with the 16-bit counterparts at the time when the computer was designed.
- Smaller Data Bus: That is why an 8-bit data bus is used which reduces product complexity and costs and therefore can be well implemented in early PCs.

Disadvantages of 8088 Microprocessor

- Lower Performance: The 8088 also has a fewer number of data lines than the 8086; it has 8 data lines used for moving data across the data bus, therefore is slower in moving data than the 8086.
- Limited Data Handling: It can only work with 8 bits of data at a time which means it consumes more time than 8086 in executing the similar instructions.

Though the architecture and instruction set of both 8086 and 8088 processors are same, still there are differences between them. Both The 8088 and 8086 used segmented addressing to allow these chips to address 1 MB of memory using 20 address bits (2^20 = 1,048,576).

Differences between 8086 and 8088 Microprocessors

Aspect	8086 Microprocessor	8088 Microprocessor
Data Bus Width	16-bit external data bus	8-bit external data bus
Instruction Queue	6-byte prefetch queue	4-byte prefetch queue
Memory Access	Can access 16 bits of memory in a single cycle	Accesses 8 bits of memory at a time, requiring two cycles for 16-bit data
Performance	Generally faster due to the wider data bus	Slightly slower as data transfer requires more cycles
Pin Count	40 pins	40 pins
Application	Used for high-performance applications	Used for cost-sensitive applications where lower performance is acceptable
Compatibility	More compatible with 16-bit peripherals	More compatible with 8-bit peripherals
Release Year	1978	1979

Intel 80386 Microprocessor (i386) – Detailed Overview

The **Intel 80386**, also known as **i386**, was a **32-bit microprocessor** introduced in **1985**. It was the **first x86 processor** to support **32-bit computing**, multitasking, and memory management features like **paging and virtual memory**, forming the foundation for modern operating systems.

1. Key Features of 80386

Feature	Intel 80386
Data Bus Width	32-bit
Address Bus Width	32-bit (Supports up to **4GB** memory)
Registers	32-bit General-Purpose Registers
Operating Modes	Real Mode, Protected Mode, Virtual 8086 Mode
Instruction Set	Backward compatible with **8086/80286** + new **32-bit instructions**
Paging Support	Yes (First x86 CPU to introduce paging)
Cache Memory	No internal cache (Added in 80486)
Clock Speed	12 MHz to 40 MHz

2. Operating Modes of 80386

Mode	Description
Real Mode	Works like **8086/8088**, limited to **1MB memory**
Protected Mode	Supports **4GB memory**, multitasking, and memory protection
Virtual 8086 Mode	Allows running multiple **8086 programs** in a protected environment

Architecture of 30836 microprocessor

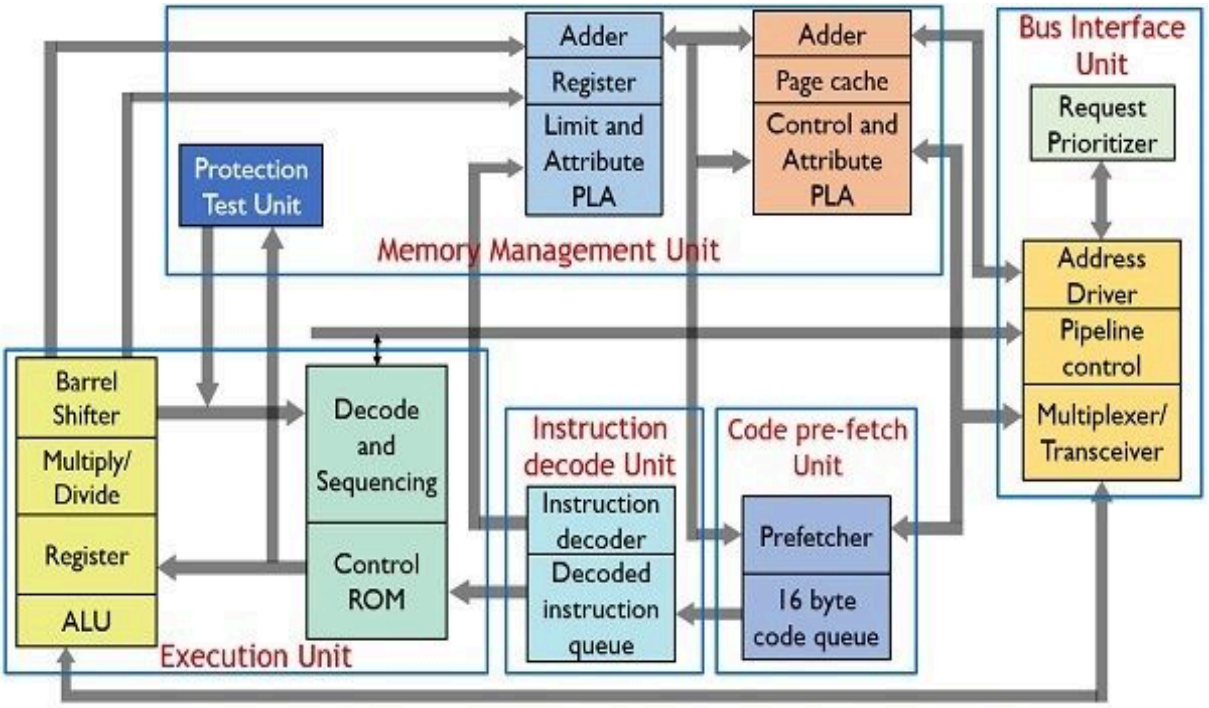

Architecture of 80386 Microprocessor

The **80386 architecture** includes:

- **32-bit General-Purpose Registers** (EAX, EBX, ECX, EDX, ESI, EDI, ESP, EBP)
- **Segment Registers** (CS, DS, SS, ES, FS, GS) for memory segmentation
- **Control Registers (CR0, CR2, CR3, CR4)** for protected mode and paging
- **Memory Management Unit (MMU)** for paging and virtual memory

Memory Management in 80386

- **Uses 32-bit addresses → Supports up to 4GB physical memory**
- **Paging System:** Divides memory into **4KB pages** for efficient memory management
- **Segmented Memory:** Improved from **8086/80286** for better protection and multitasking

Pin Diagram of 80386 microprocessor:

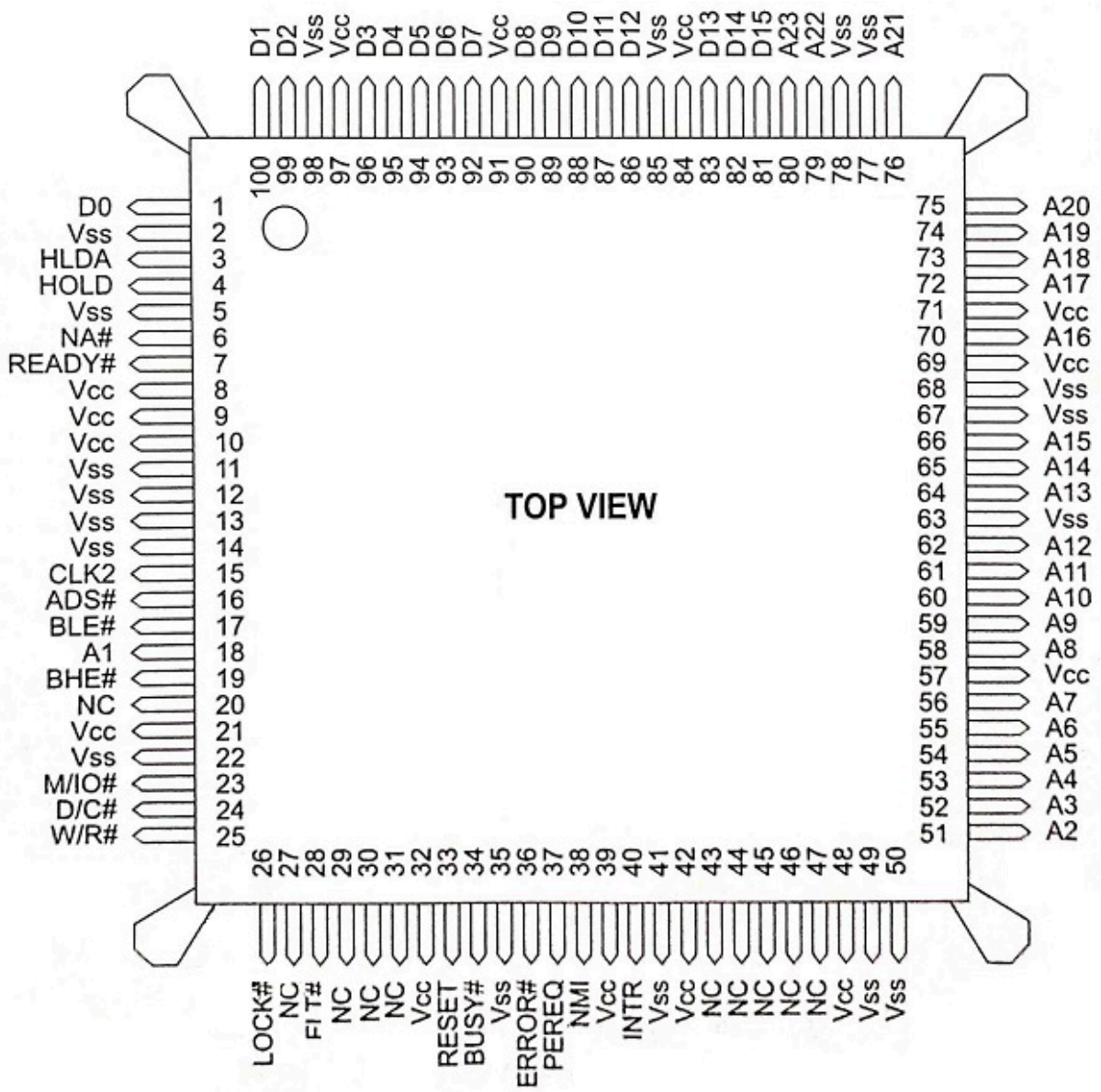

Fig. 11.36 *The pin diagram of 80386 processor*