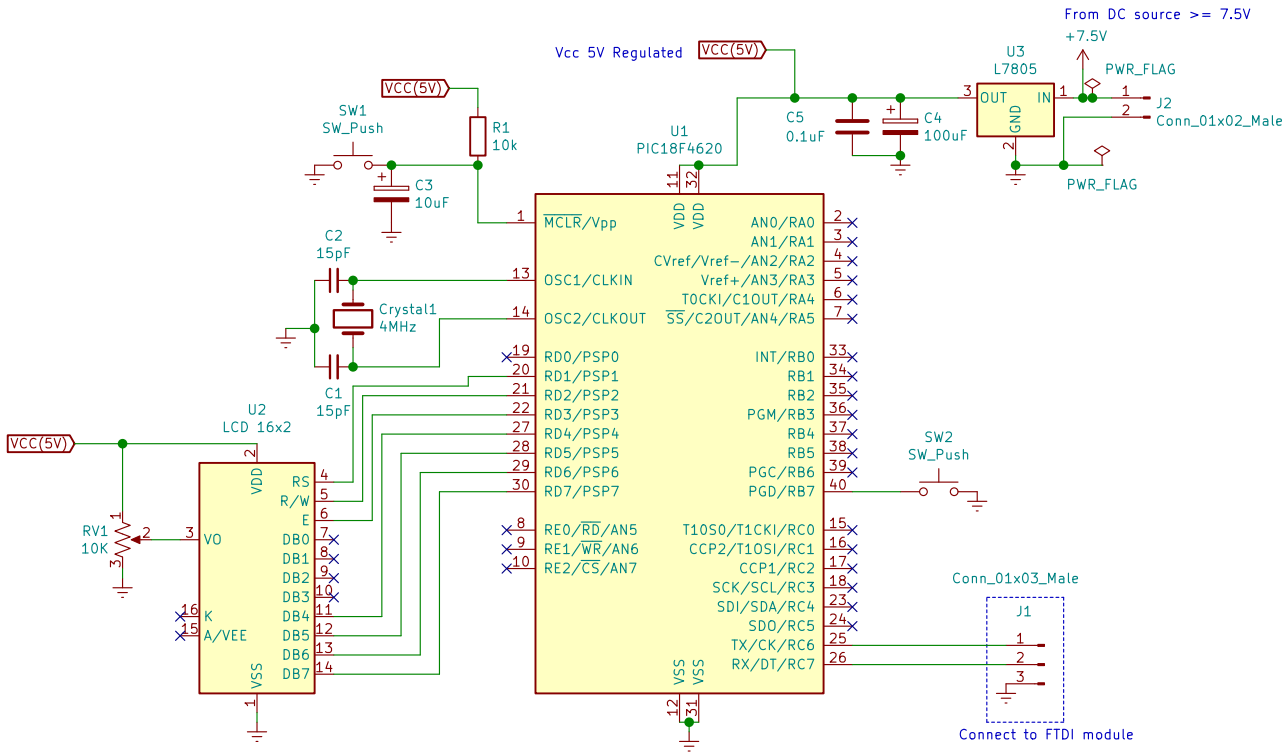

Department Of Computer Engineering

Dr. Raed Alqadi

Sheet: /

File: p1.sch

Title: PIC18F4620 Basic Circuit

Size: A4	Date: 2019-02-22	**Rev: 1**
KiCad E.D.A. kicad (5.0.2)-1		Id: 1/1