## Gate Driver

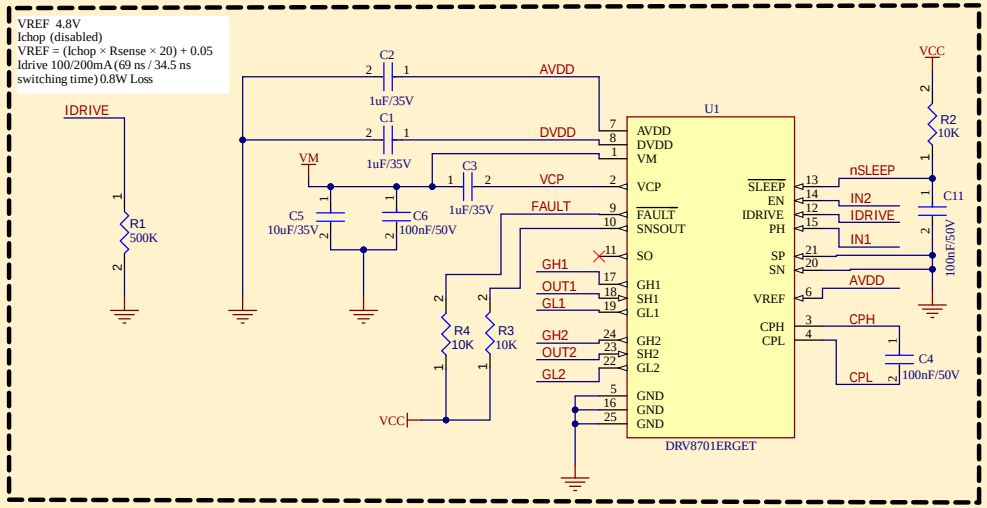


## H_Bridge FETs

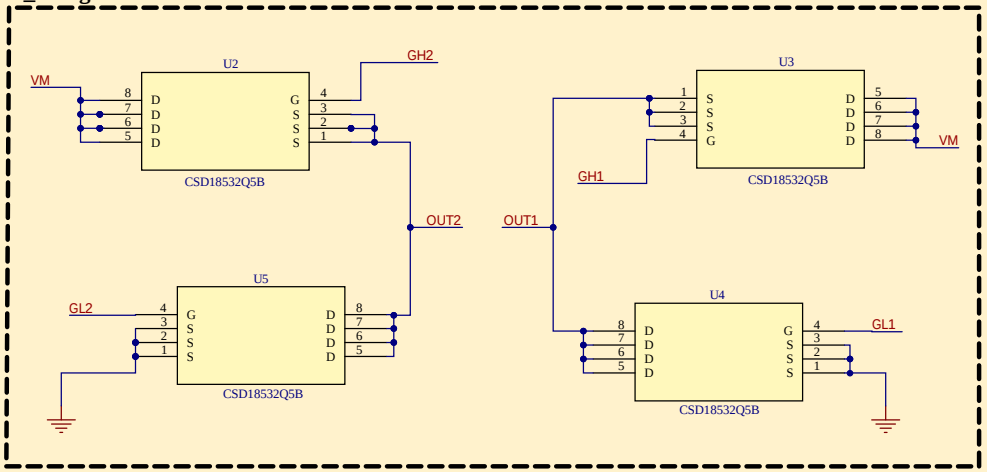


## Connectors and Decouple

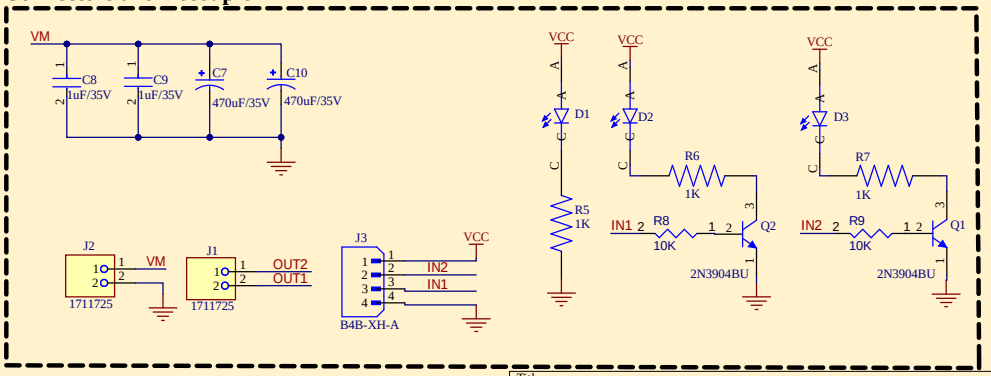


| Title | | |
|---|---|---|
| **H-Bridge_DRV8701** | | |
| Size A4 | Number | Revision Rev 2.1 |
| Date: 3/03/2026 | | Sheet of 01/01 |
| File: D:\Tawhid's Docs\..\H_Bridge1.SchDoc | | Drawn By: TAB |