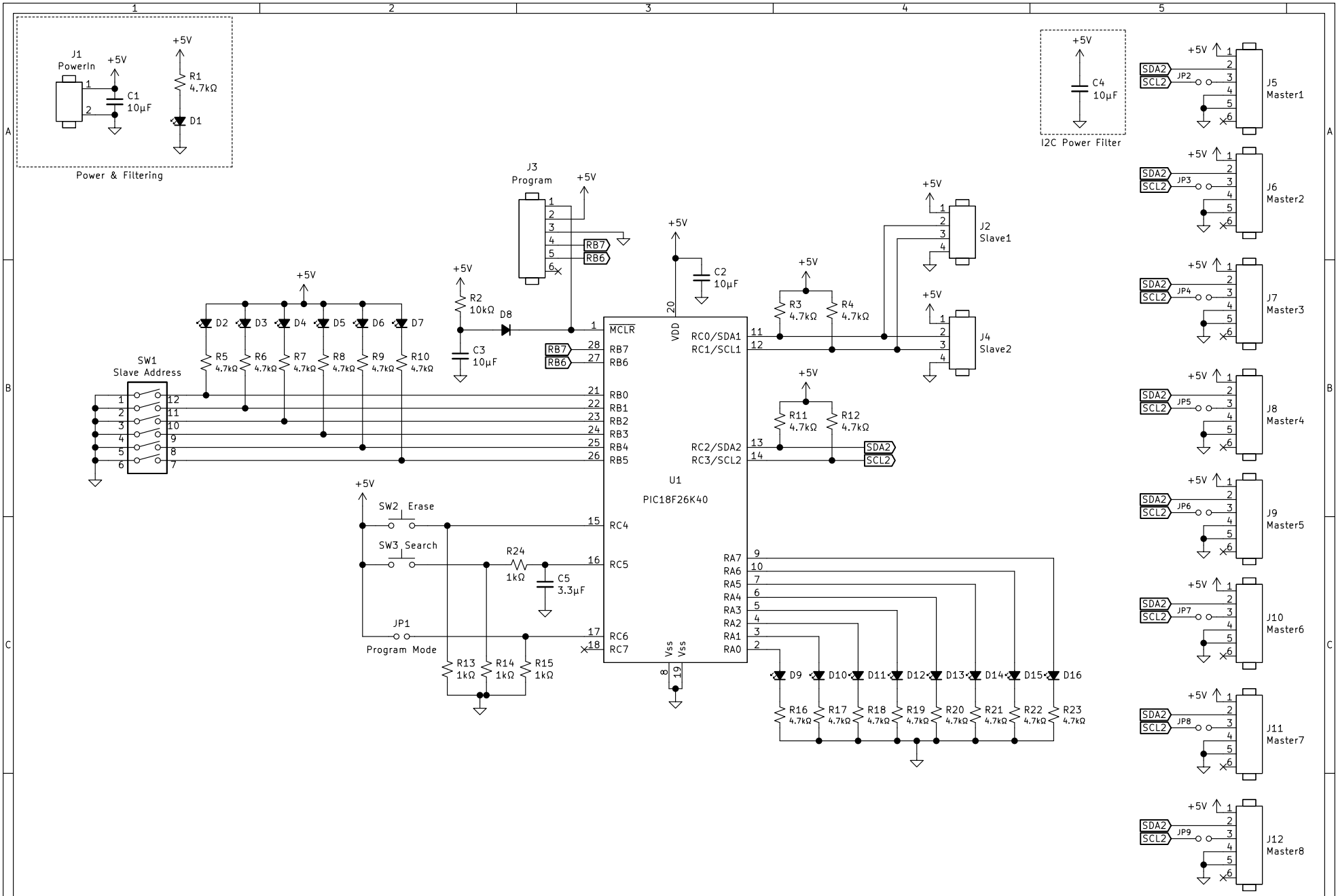

Idaho State University | Robotics & Communications Systems Engineering Technology

Robotics and Comm. Systems Engineering Technology
1152 Martin Luther King Jr Blvd
Pocatello Idaho 83209
Drawn By: Taylor Herndon
Idaho State University

Sheet: /
File: SensorBoard.sch

Title: Sensor Board Main

Size: A	Date:	**Rev:**
KiCad E.D.A. kicad (5.1.9)-1		Id: 1/1