Graph visits

How to explore graphs

Giuseppe Averta
Carlo Masone
Francesca Pistilli
Davide Buoso
Gaetano Falco

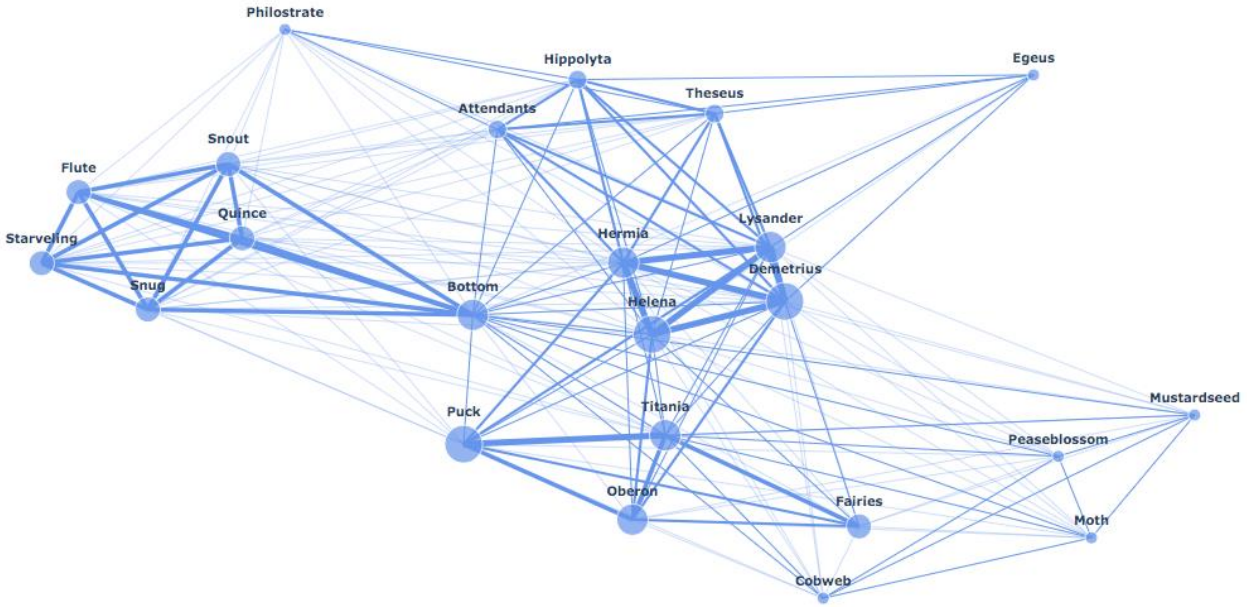

CC BY NC SA

Representing and visiting graphs

GRAPH VISITS

Visit Algorithms

- Visit =
  - Systematic exploration of a graph
  - Starting from a ‘source’ vertex
  - Reaching all reachable vertices
- Main strategies
  - Breadth-first visit (“in ampiezza”)
  - Depth-first visit (“in profondità”)

Breadth-First Visit

- Also called Breadth-first search (BFV or BFS)
- All reachable vertices are visited “by levels”
  - L – level of the visit
  - SL – set of vertices in level L
  - L=0, S0={ vsource }
  - Repeat while SL is not empty:
    - SL+1 = set of all vertices:
      - not visited yet, and
      - adjacent to at least one vertex in SL
    - L=L+1

Example

Source = s
L = 0
$S_0 = \{s\}$

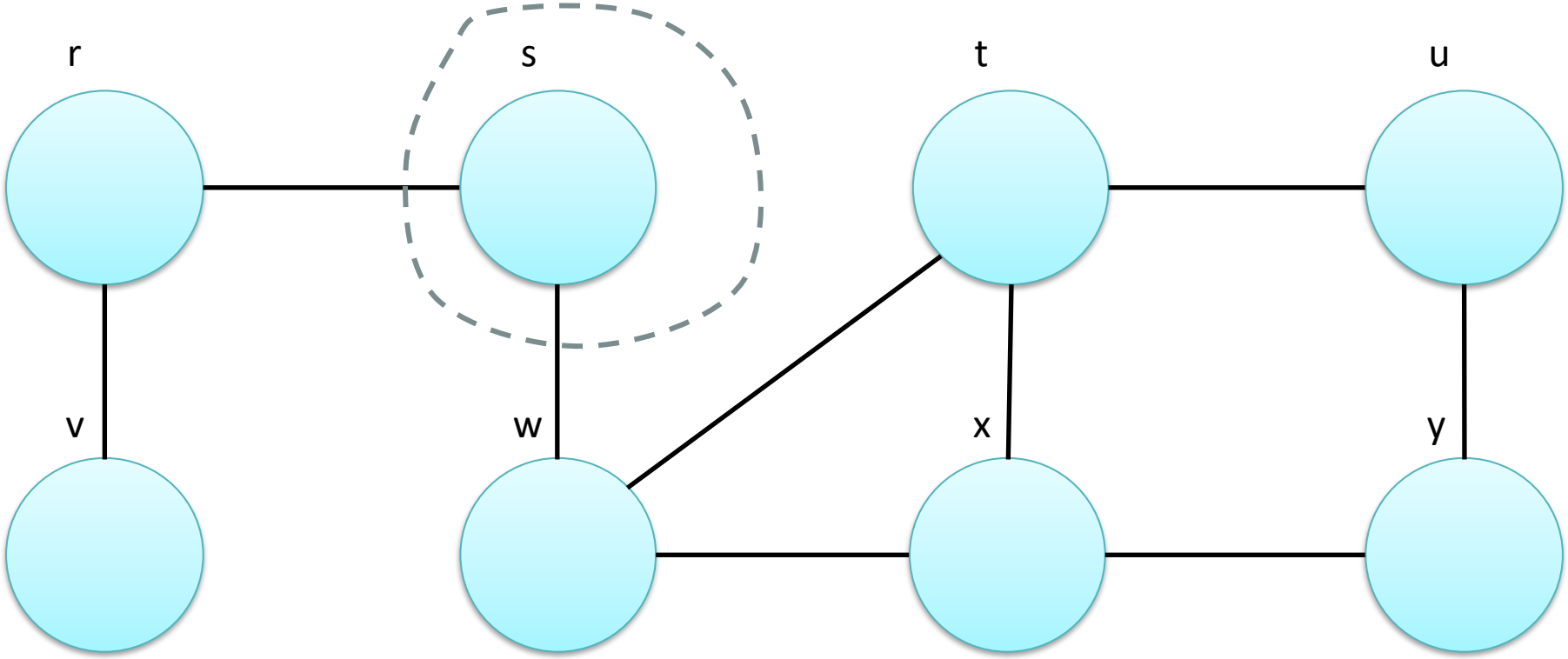

Example

$L = 1$
$S_0 = \{s\}$
$S_1 = \{r, w\}$

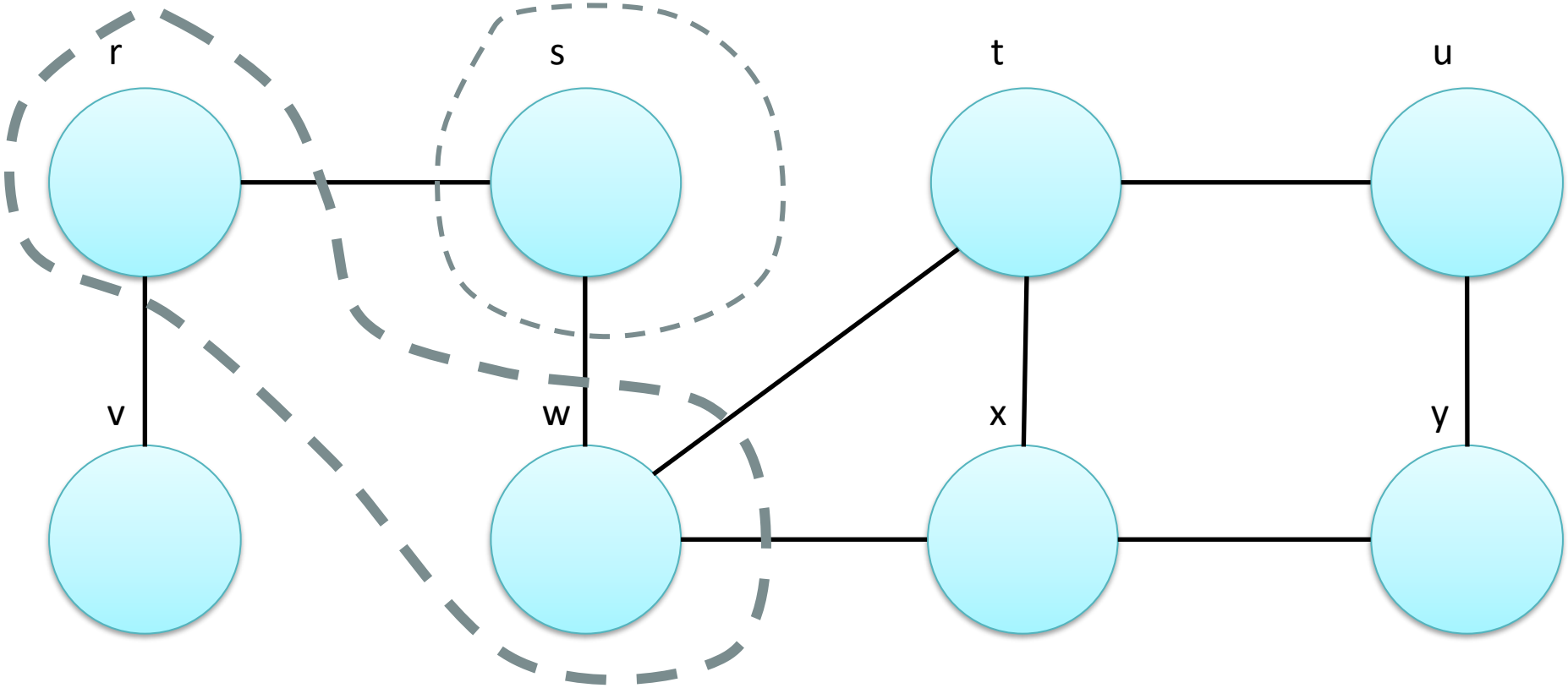

Example

$L = 2$
$S_1 = \{r, w\}$
$S_2 = \{v, t, x\}$

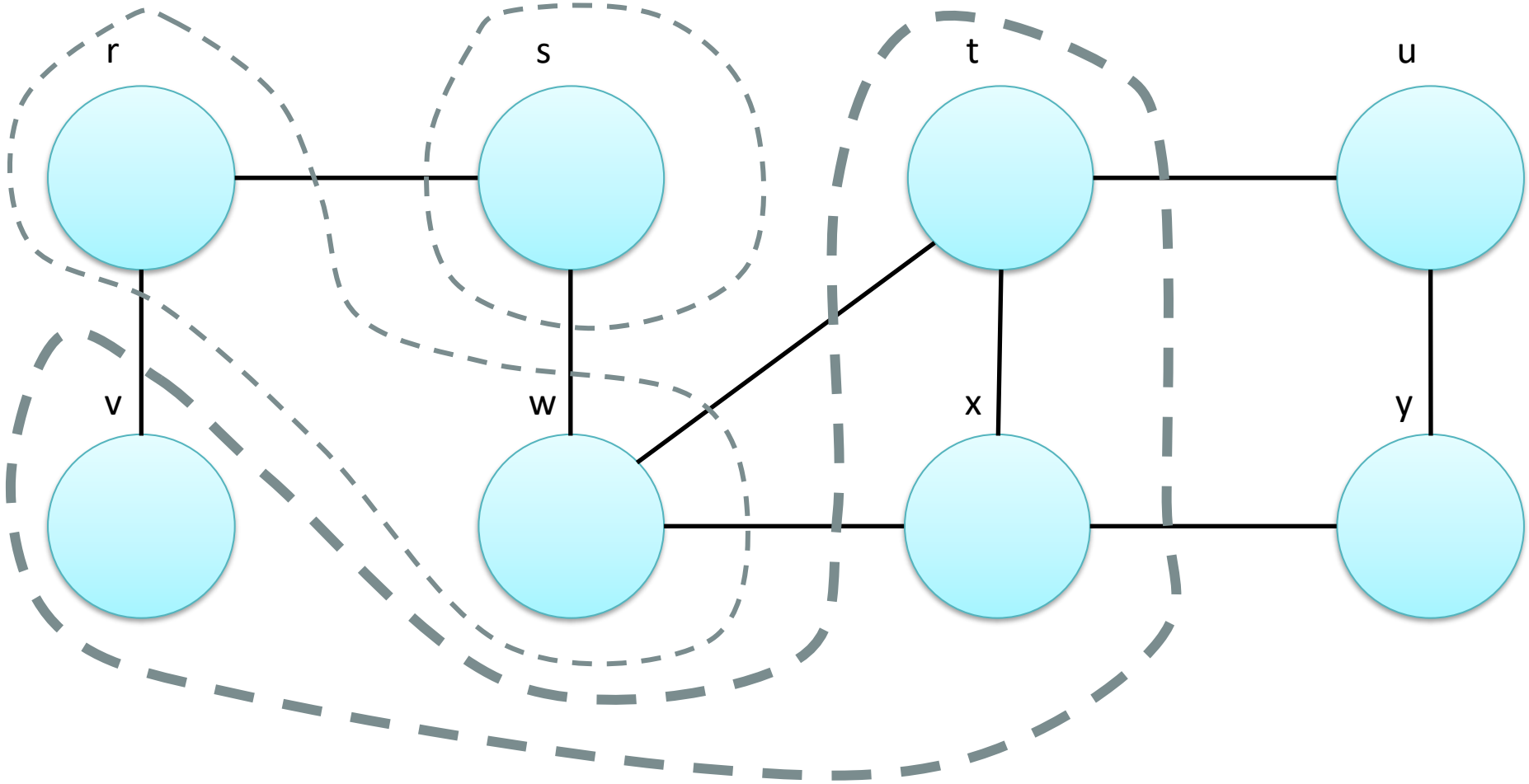

Example

$L = 3$
$S_2 = \{v, t, x\}$
$S_3 = \{u, y\}$

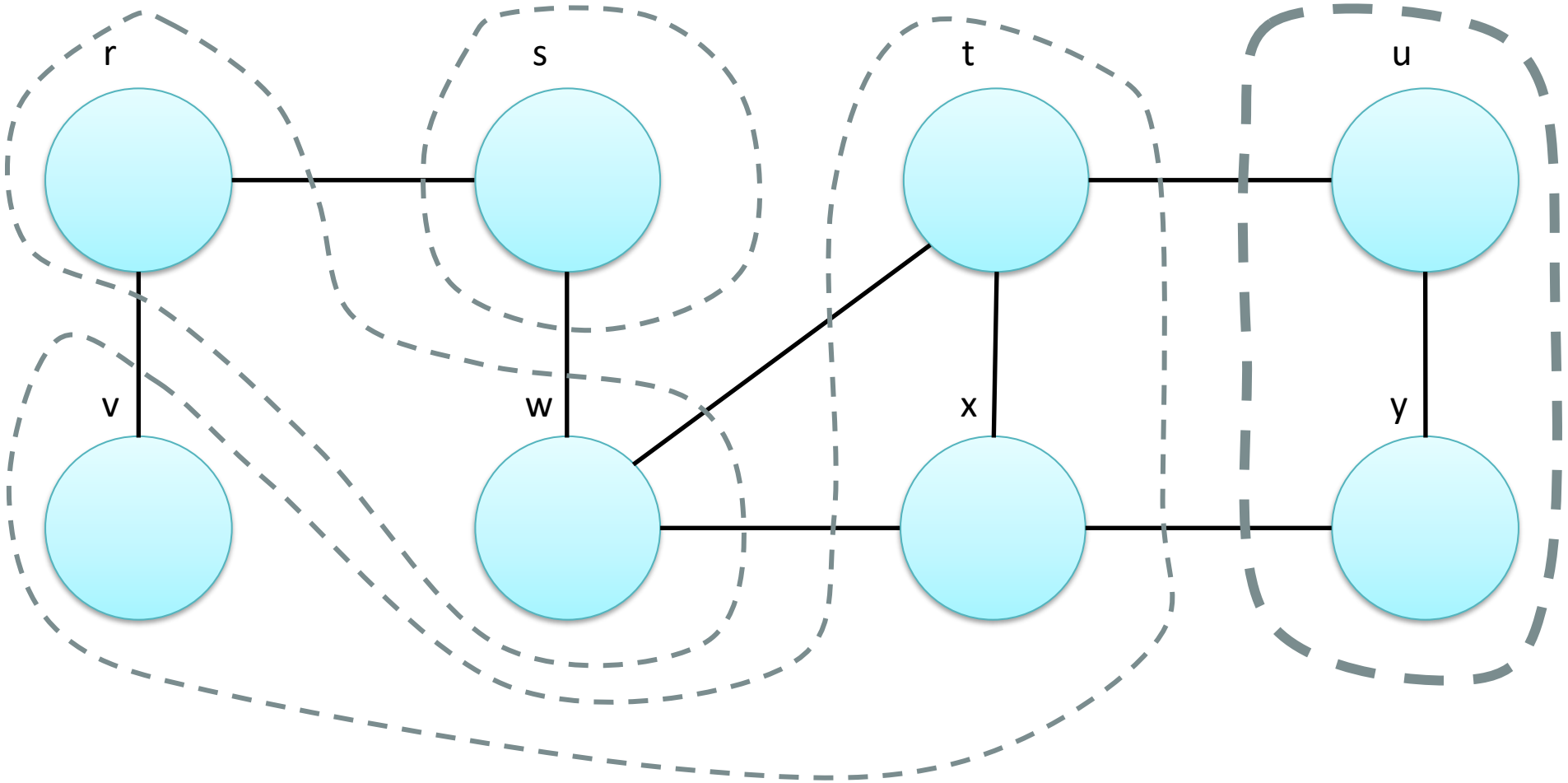

BFS Tree

- The result of a BFV identifies a “visit tree” in the graph:
  - The tree root is the source vertex
  - Tree nodes are all graph vertices
    - (in the same connected component of the source)
  - Tree are a subset of graph edges
    - Those edges that have been used to “discover” new vertices.

BFS Tree

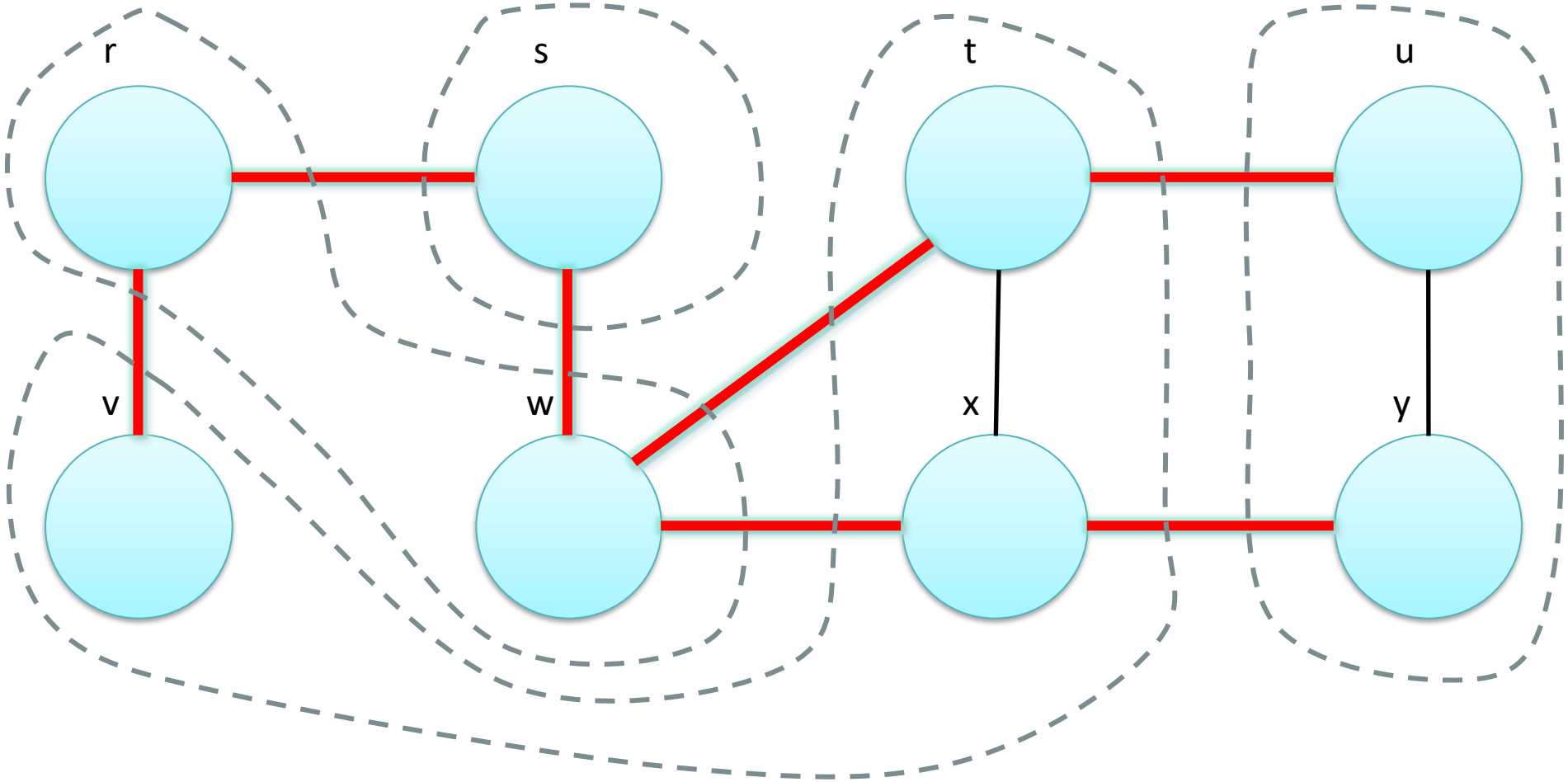

Minimum (shortest) paths

- Shortest path: the minumum number of edges on any path between two vertices
- The BFS procedure computes all minimum paths for all vertices, starting from the source vertex
- NB: unweighted graph : path length = number of edges

Depth First Visit

- Also called Depth-first search (DFV or DFS)
- Opposite approach to BFS
- At every step, visit one (yet unvisited) vertex, adjacent to the last visited one
- If no such vertex exist, go back one step to the previously visited vertex
- Lends itself to recursive implementation
  - Similar to tree visit procedures

DFS Algorithm

- DFS(Vertex v)
  - For all (w : adjacent_to(v))
    - If(not visited (w))
      - Visit (w)
      - DFS(w)

- Start with: DFS(source)

Example

Source = s

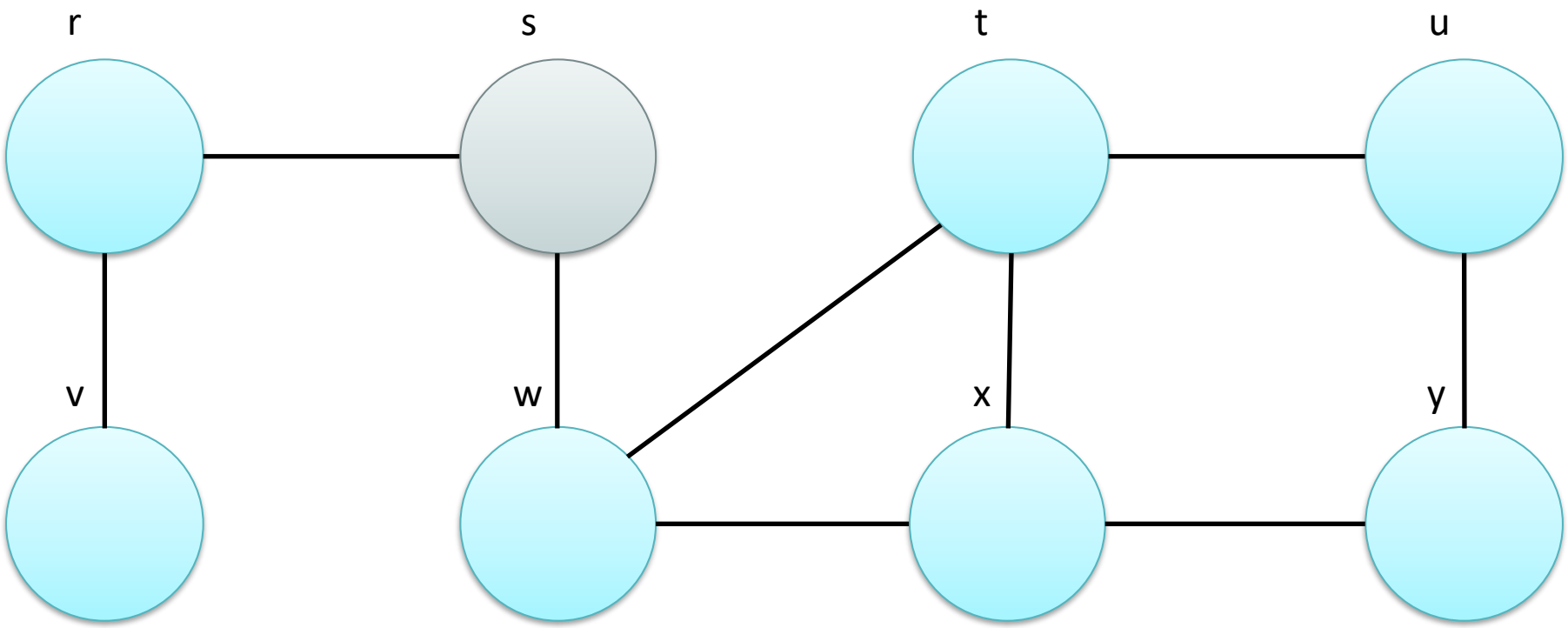

Example

Source = s
Visit r

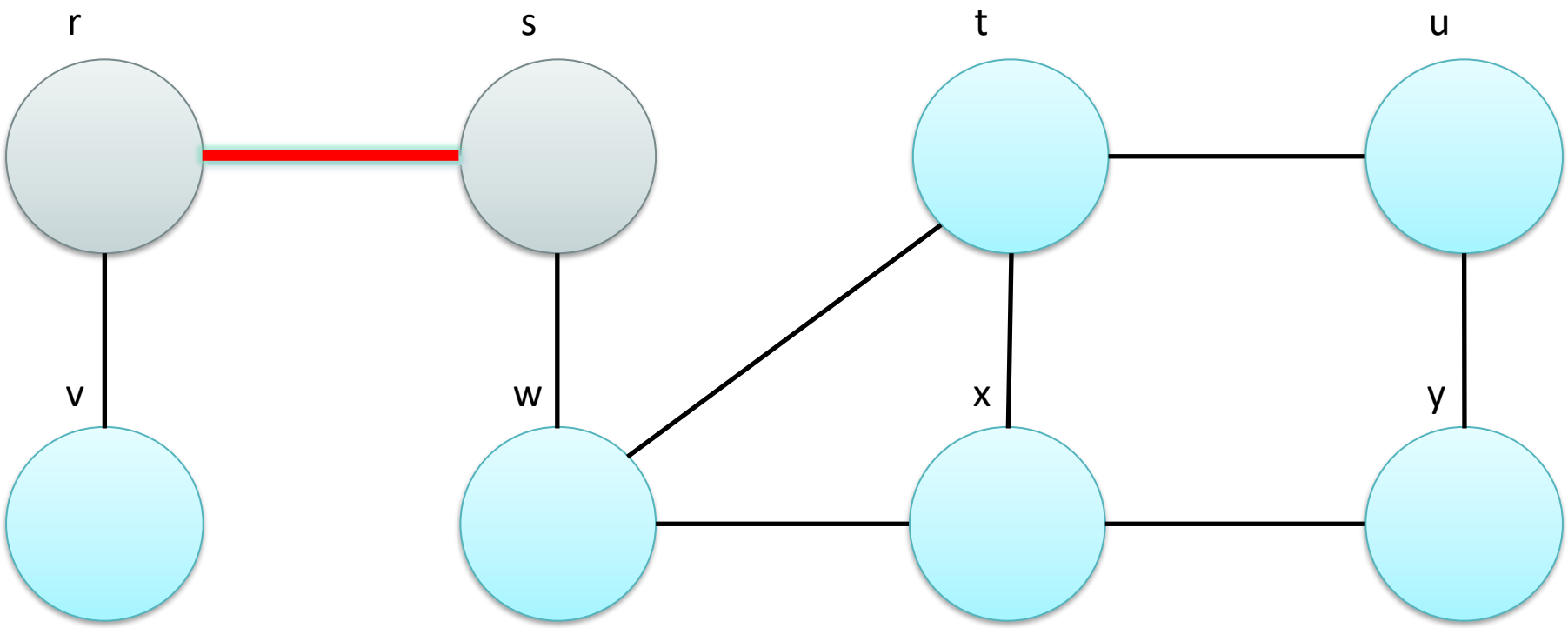

Example

Source = s
Visit r
Visit v

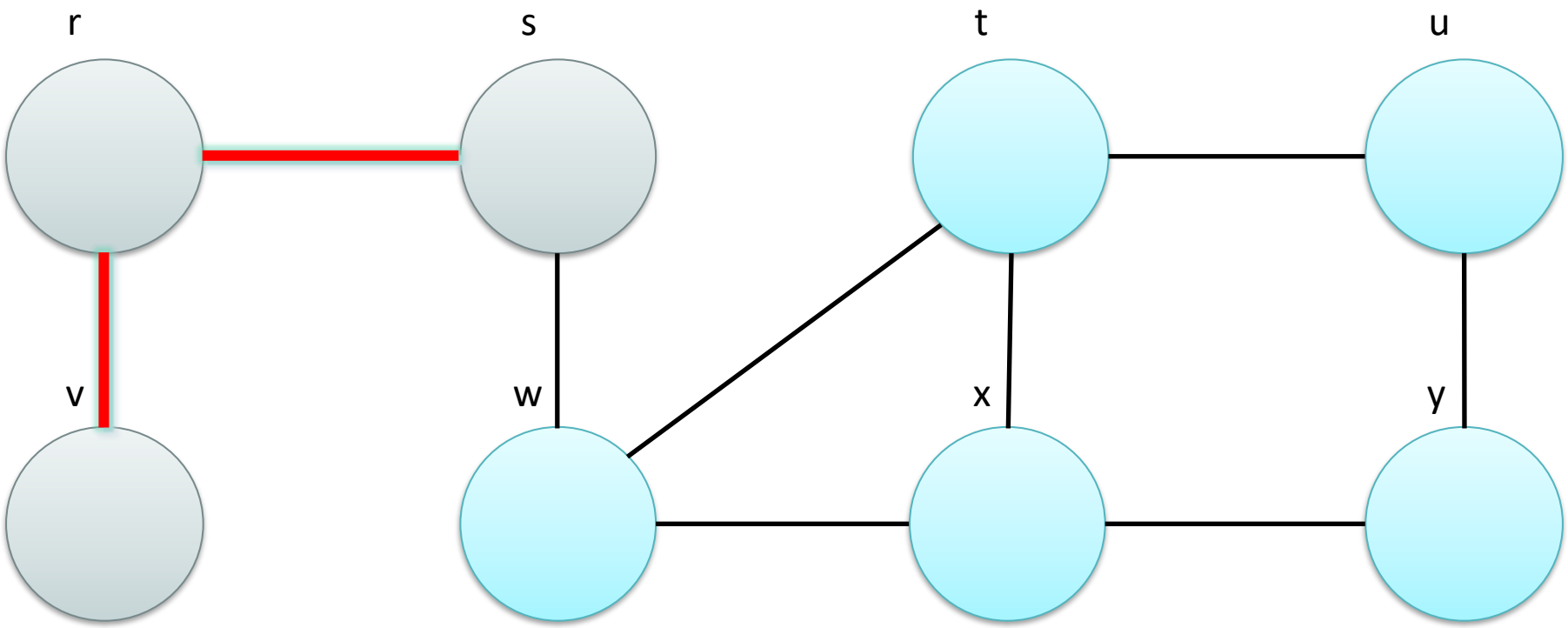

Example

Source = s
Back to r
Back to s
Visit w

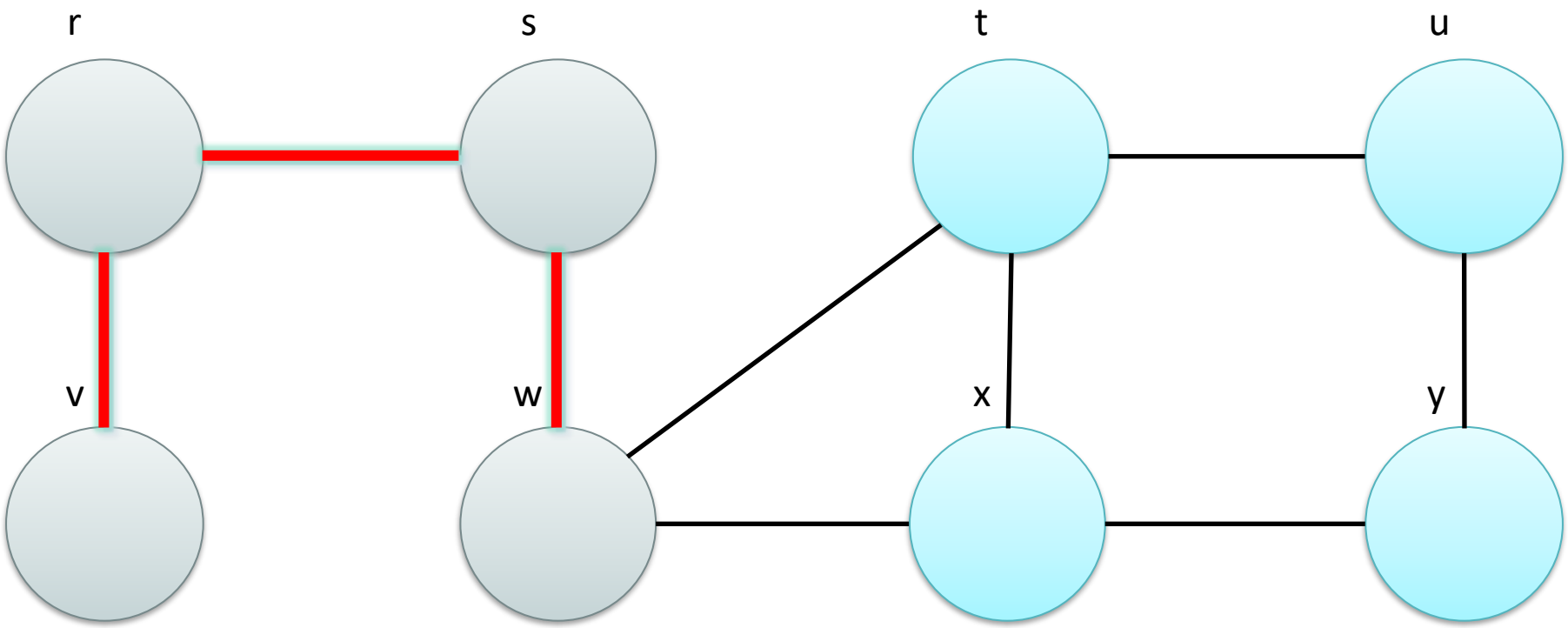

Example

Source = s
Visit w
Visit t

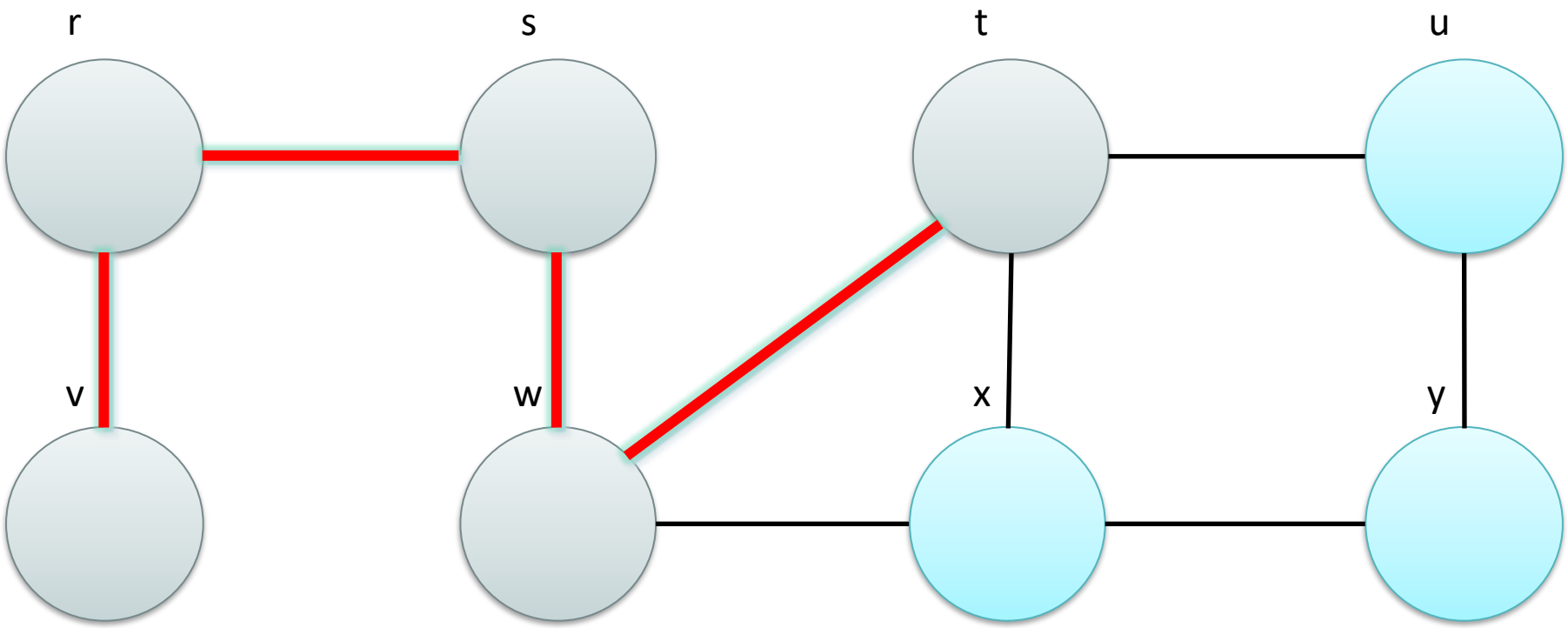

Example

Source = s
Visit w
Visit t
Visit u

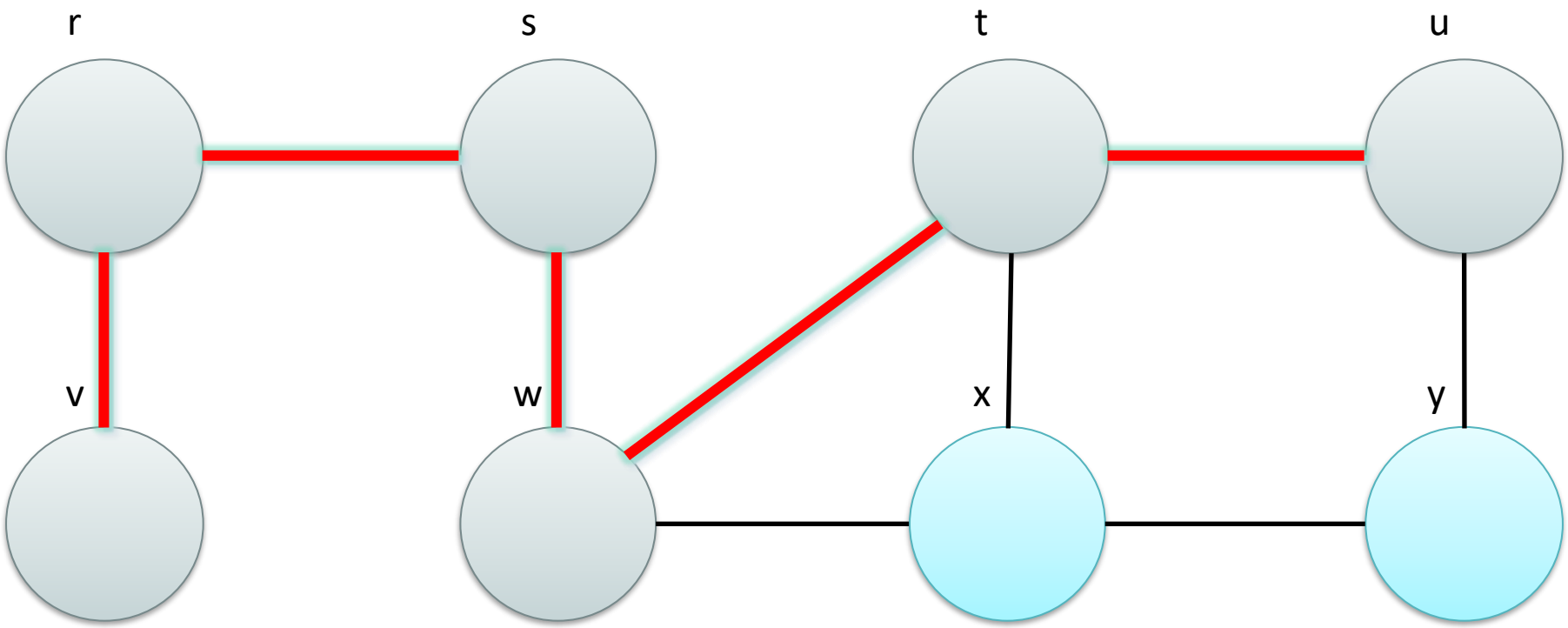

Example

Source = s
Visit w
Visit t
Visit u
Visit y

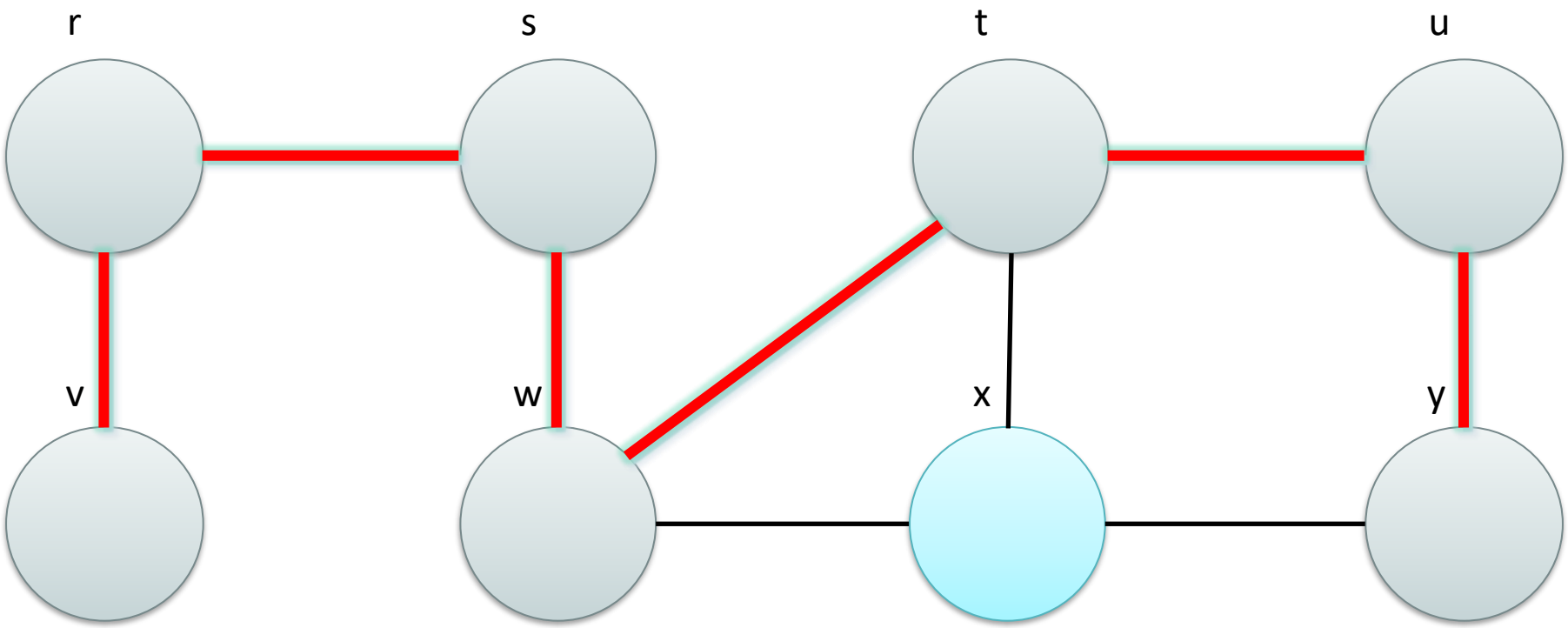

Example

Source = s
Visit w
Visit t
Visit u
Visit y
Visit x

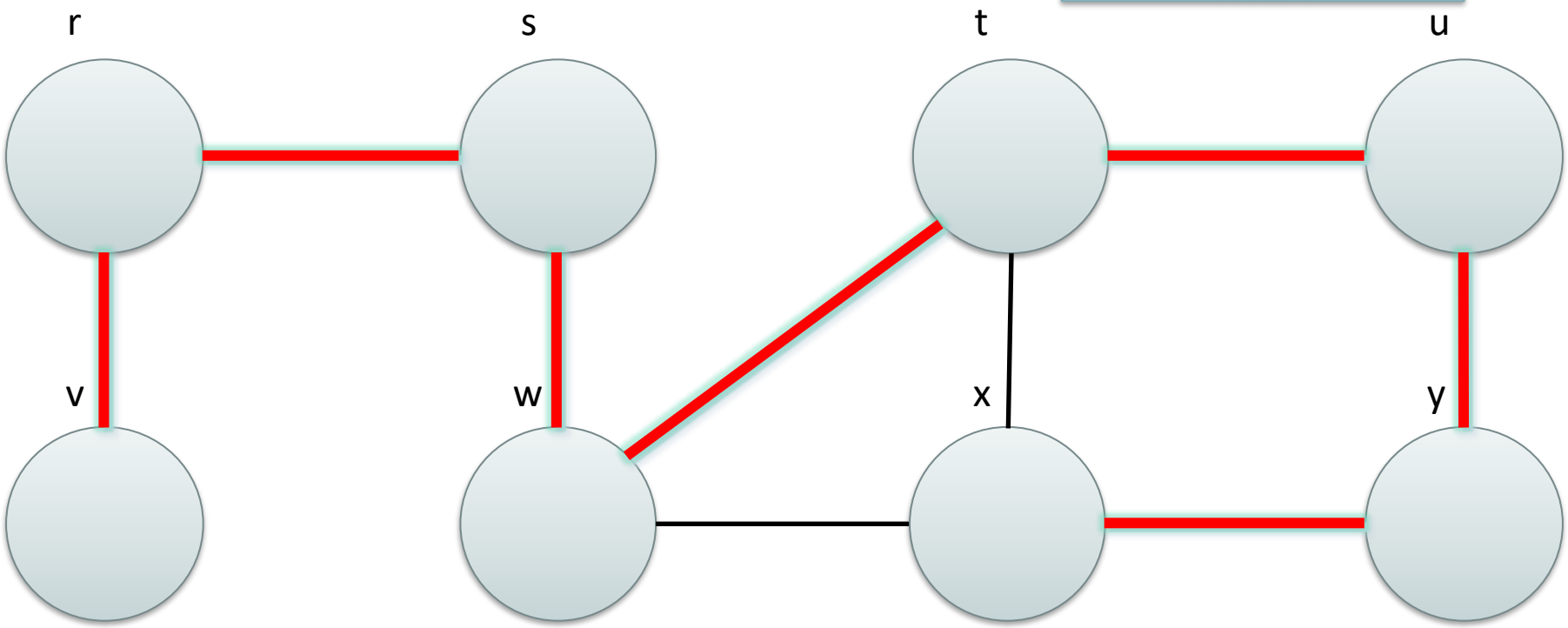

Example

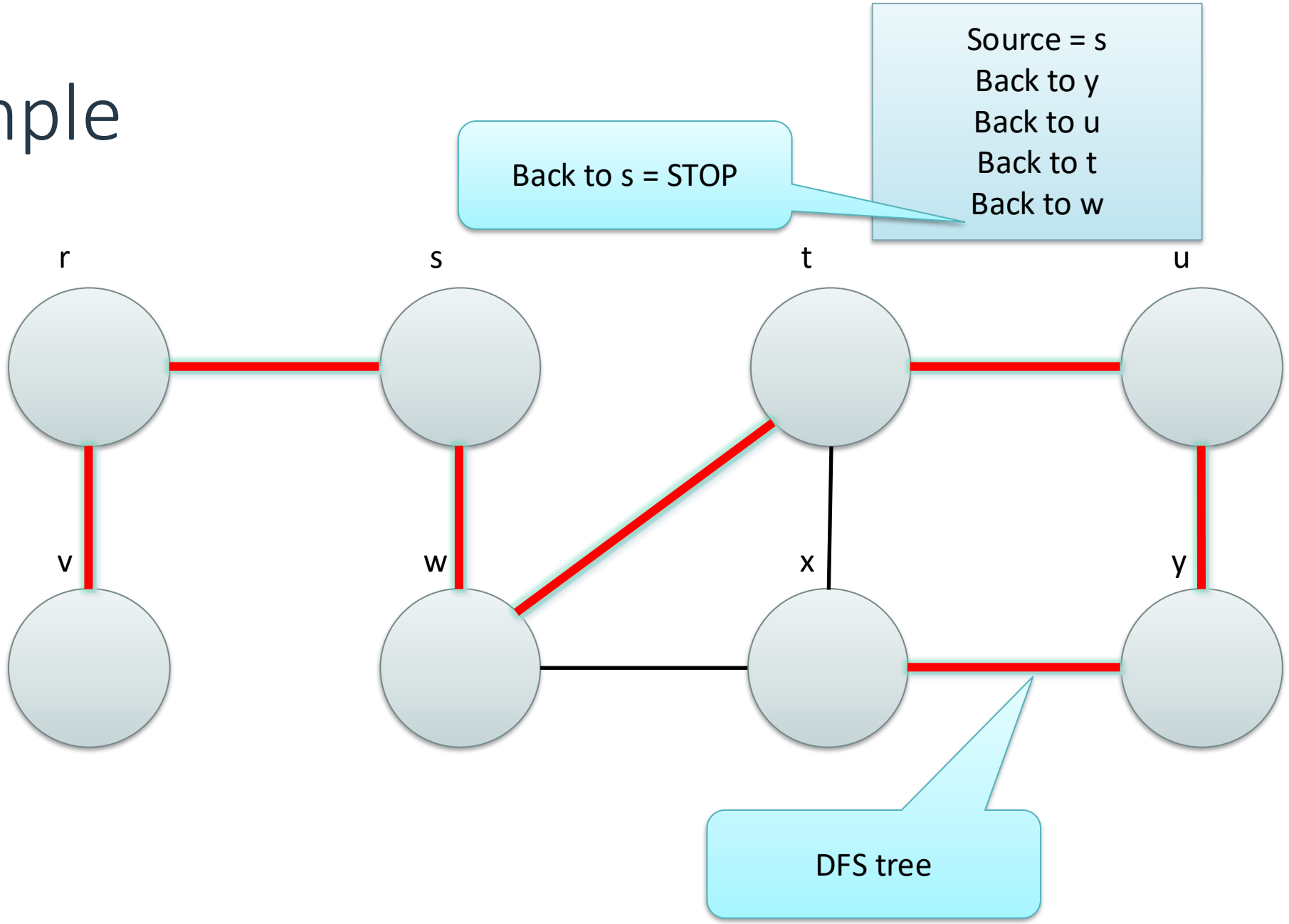
Source = s
Back to y
Back to u
Back to t
Back to w
Back to s = STOP
r
s
t
u
v
w
x
y
DFS tree

Example

Directed graph

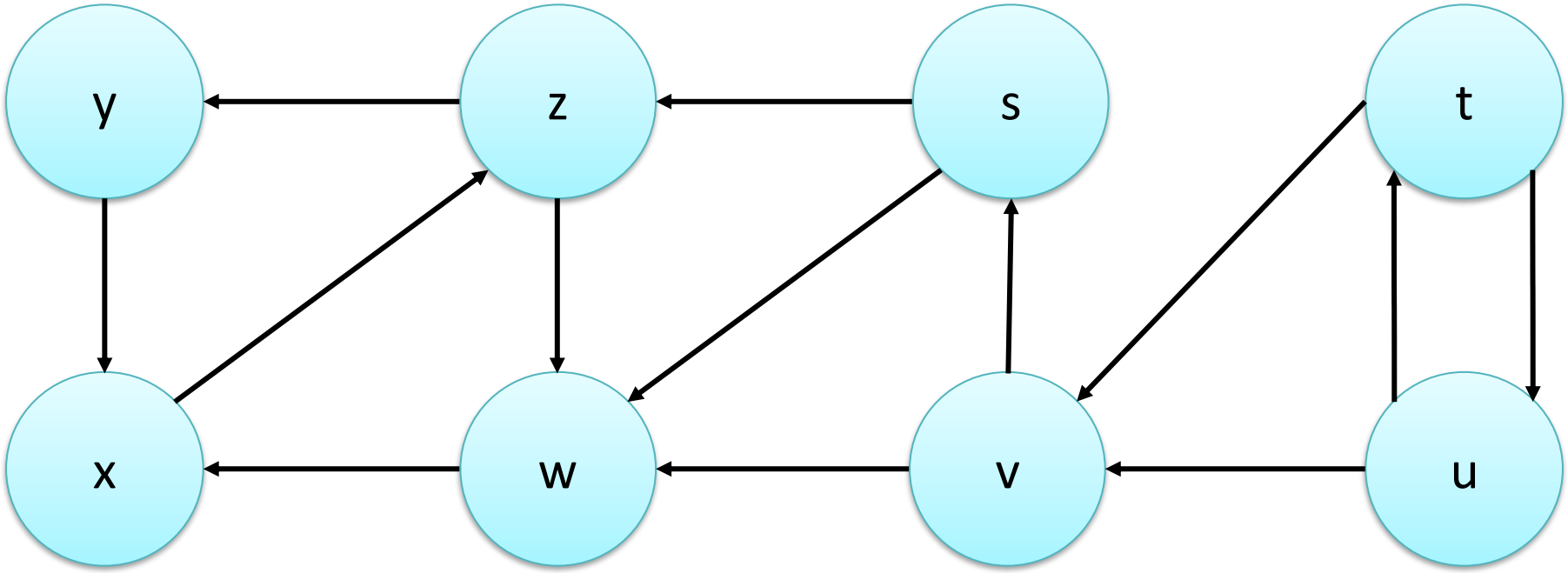

Example

DFS visit
(sources: s, t)

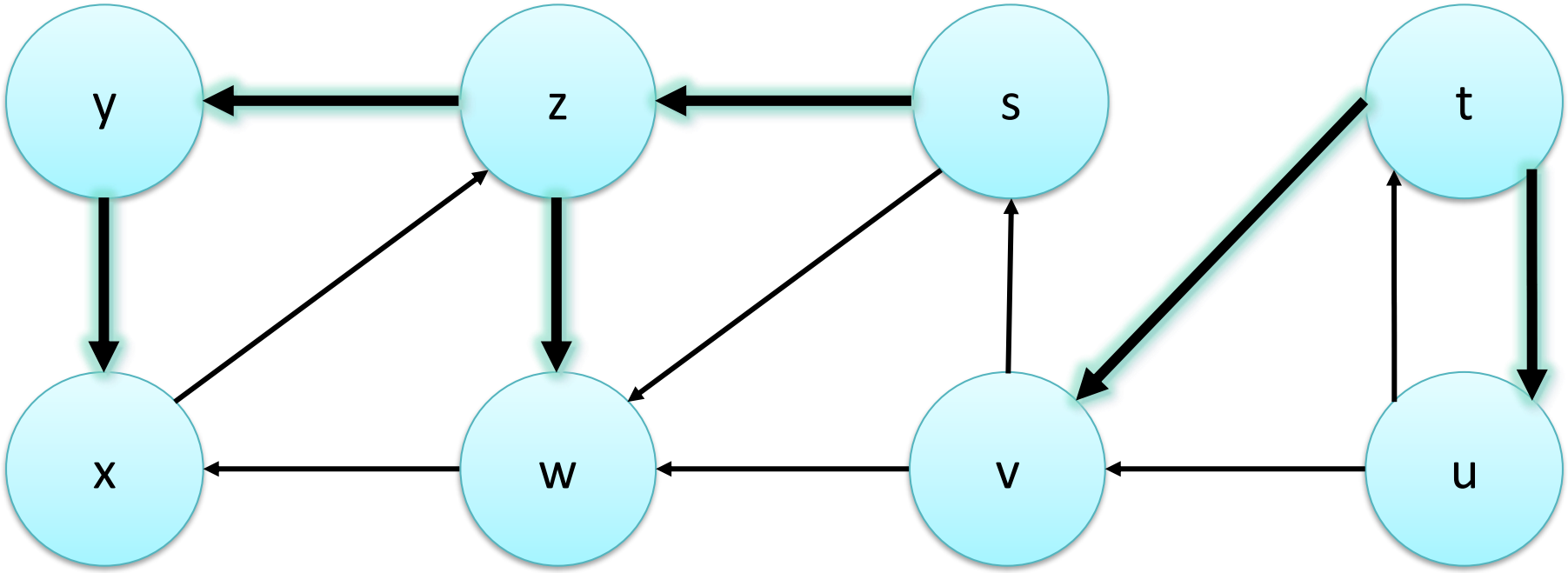

Complexity

- Visits have linear complexity in the graph size
  - BFS : O(V+E)
  - DFS : O(V+E)
- N.B. for dense graphs, $E = O(V^2)$

Resources

- Maths Encyclopedia: http://mathworld.wolfram.com/
- Basic Graph Theory with Applications to Economics http://www.isid.ac.in/~dmishra/mpdoc/lecgraph.pdf
- Application of Graph Theory in real world
- http://prezi.com/tseh1wvpves-/application-of-graph-theory-in-real-world/

Representing and visiting graphs

VISITS IN NETWORKX

Traversal

- Visits are called “traversals”
- NetworkX already provides implementations for BFV and DFV, together with other visits strategies

Graph traversal methods

Traversal

Depth First Search

Basic algorithms for depth-first searching the nodes of a graph.

`dfs_edges`(G[, source, depth_limit, ...])	Iterate over edges in a depth-first-search (DFS).
`dfs_tree`(G[, source, depth_limit, ...])	Returns oriented tree constructed from a depth-first-search from source.
`dfs_predecessors`(G[, source, depth_limit, ...])	Returns dictionary of predecessors in depth-first-search from source.
`dfs_successors`(G[, source, depth_limit, ...])	Returns dictionary of successors in depth-first-search from source.
`dfs_preorder_nodes`(G[, source, depth_limit, ...])	Generate nodes in a depth-first-search pre-ordering starting at source.
`dfs_postorder_nodes`(G[, source, ...])	Generate nodes in a depth-first-search post-ordering starting at source.
`dfs_labeled_edges`(G[, source, depth_limit, ...])	Iterate over edges in a depth-first-search (DFS) labeled by type.

Breadth First Search

Basic algorithms for breadth-first searching the nodes of a graph.

`bfs_edges`(G, source[, reverse, depth_limit, ...])	Iterate over edges in a breadth-first-search starting at source.
`bfs_layers`(G, sources)	Returns an iterator of all the layers in breadth-first search traversal.
`bfs_tree`(G, source[, reverse, depth_limit, ...])	Returns an oriented tree constructed from of a breadth-first-search starting at source.
`bfs_predecessors`(G, source[, depth_limit, ...])	Returns an iterator of predecessors in breadth-first-search from source.
`bfs_successors`(G, source[, depth_limit, ...])	Returns an iterator of successors in breadth-first-search from source.
`descendants_at_distance`(G, source, distance)	Returns all nodes at a fixed `distance` from `source` in `G`.
`generic_bfs_edges`(G, source[, neighbors, ...])	Iterate over edges in a breadth-first search.

https://networkx.org/documentation/stable/reference/algorithms/traversal.html

Example

License

- These slides are distributed under a Creative Commons license “Attribution-NonCommercial-ShareAlike 4.0 International (CC BY-NC-SA 4.0)”
- You are free to:
  - Share — copy and redistribute the material in any medium or format
  - Adapt — remix, transform, and build upon the material
  - The licensor cannot revoke these freedoms as long as you follow the license terms.
- Under the following terms:
  - Attribution — You must give appropriate credit, provide a link to the license, and indicate if changes were made. You may do so in any reasonable manner, but not in any way that suggests the licensor endorses you or your use.
  - NonCommercial — You may not use the material for commercial purposes.
  - ShareAlike — If you remix, transform, or build upon the material, you must distribute your contributions under the same license as the original.
  - No additional restrictions — You may not apply legal terms or technological measures that legally restrict others from doing anything the license permits.
- https://creativecommons.org/licenses/by-nc-sa/4.0/