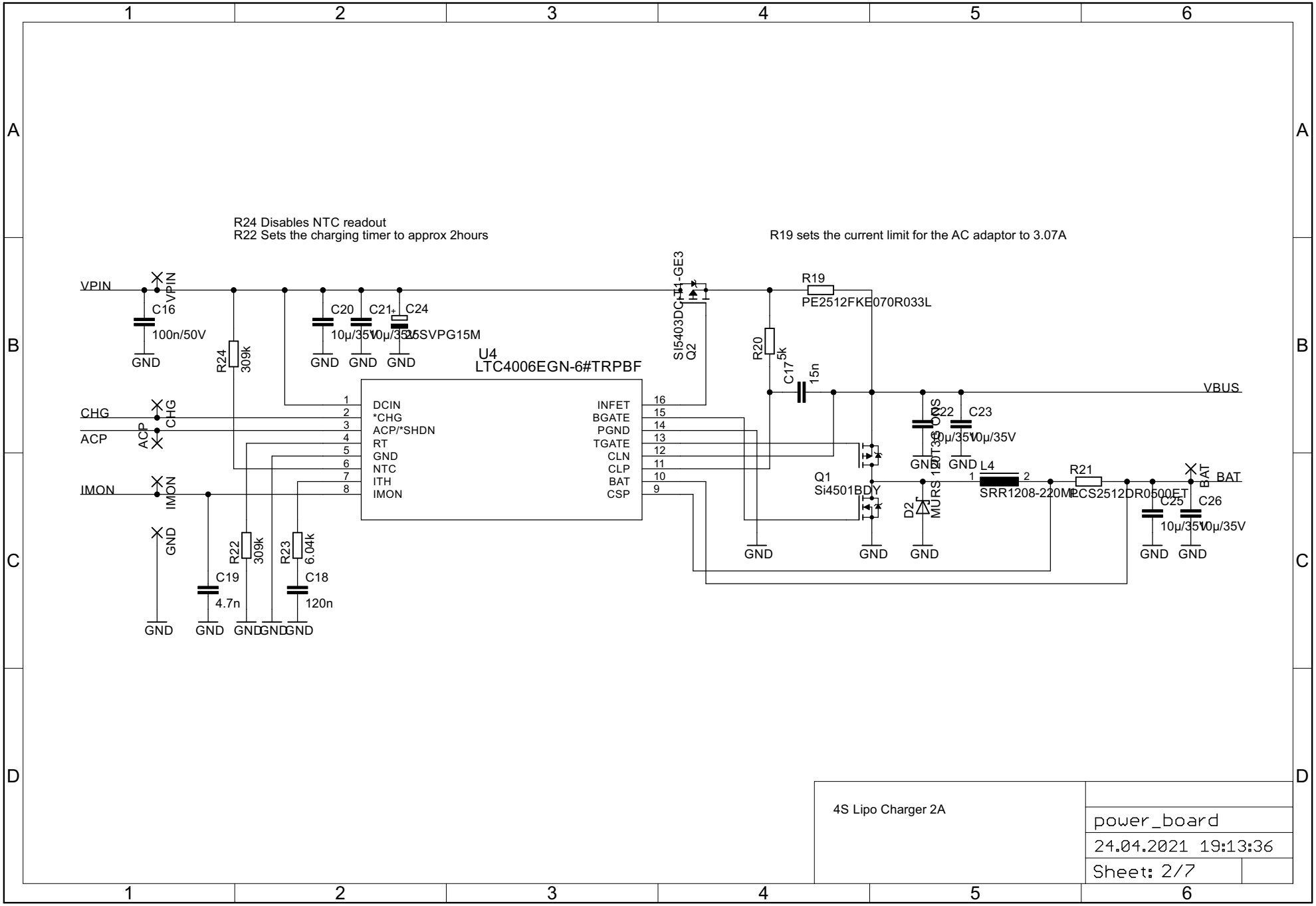

4S Lipo Charger 2A

power_board

24.04.2021 19:13:36

Sheet: 2/7

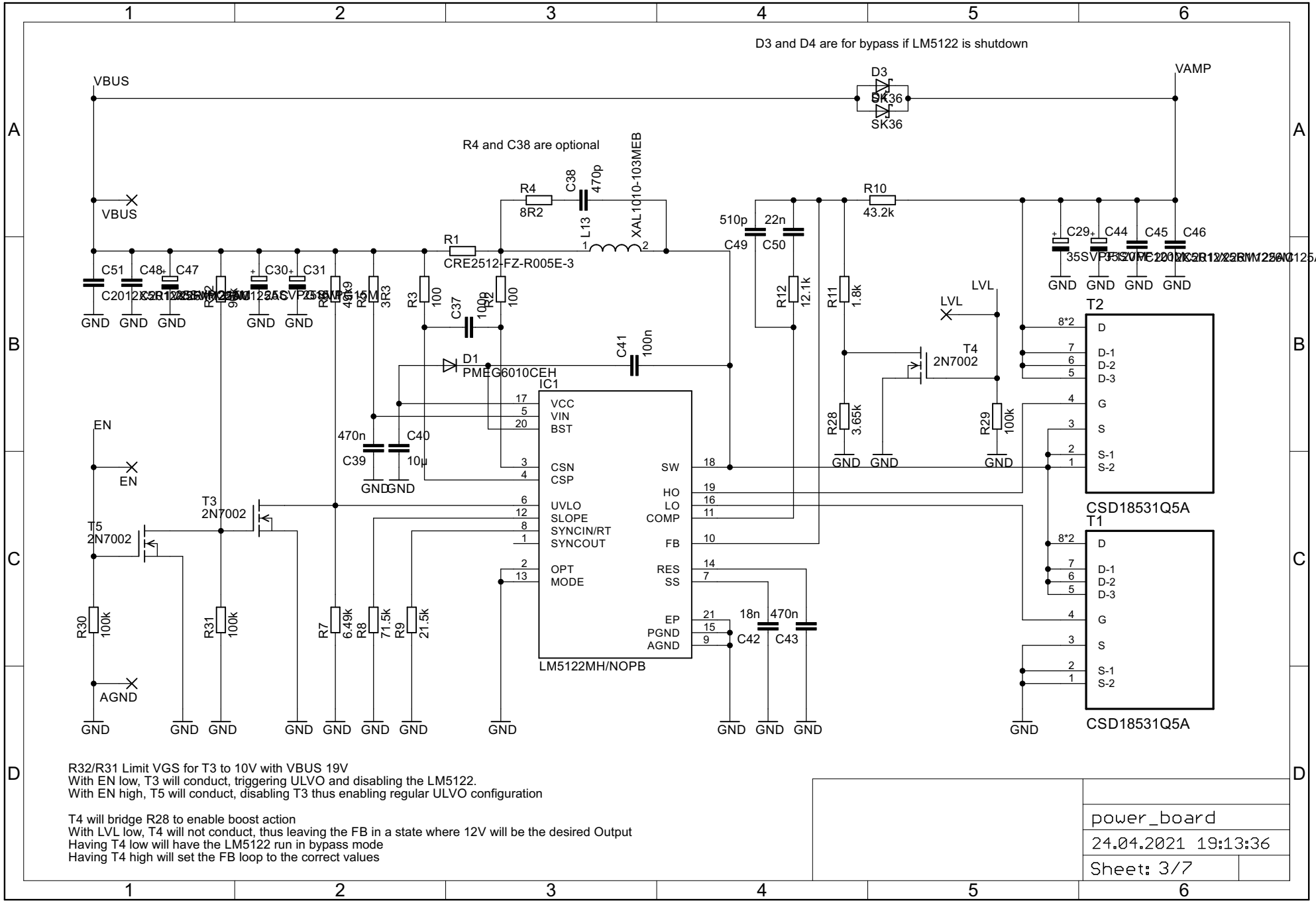

R32/R31 Limit VGS for T3 to 10V with VBUS 19V
With EN low, T3 will conduct, triggering ULVO and disabling the LM5122.
With EN high, T5 will conduct, disabling T3 thus enabling regular ULVO configuration

T4 will bridge R28 to enable boost action
With LVL low, T4 will not conduct, thus leaving the FB in a state where 12V will be the desired Output
Having T4 low will have the LM5122 run in bypass mode
Having T4 high will set the FB loop to the correct values

power_board
24.04.2021 19:13:36
Sheet: 3/7

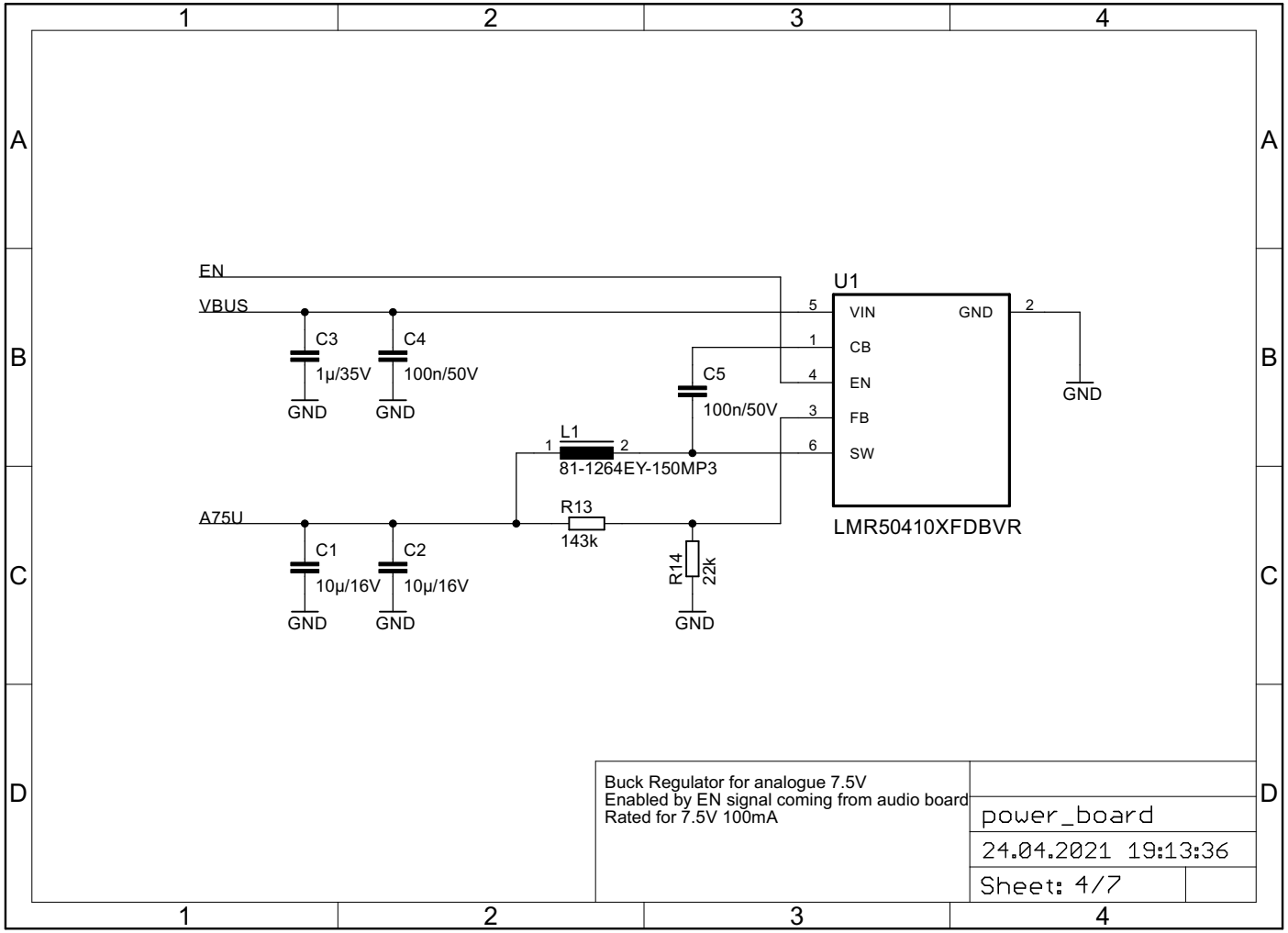
EN
VBUS
C3
1µ/35V
GND
C4
100n/50V
GND
C5
100n/50V
L1
81-1264EY-150MP3
A75U
C1
10µ/16V
GND
C2
10µ/16V
GND
R13
143k
R14
22k
GND
U1
VIN
CB
EN
FB
SW
GND
LMR50410XFDBVR
GND
Buck Regulator for analogue 7.5V
Enabled by EN signal coming from audio board
Rated for 7.5V 100mA
power_board
24.04.2021 19:13:36
Sheet: 4/7

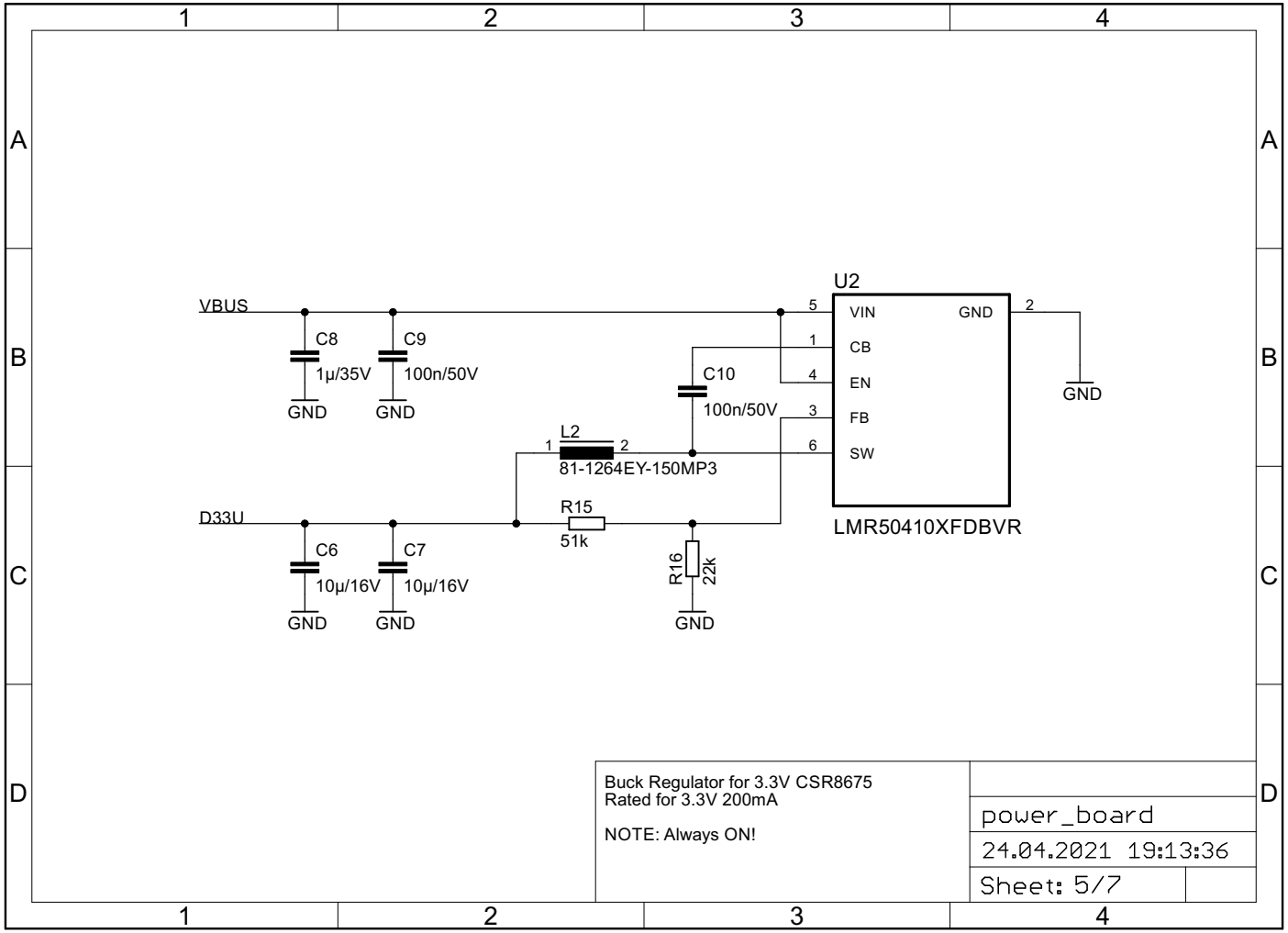
VBUS
C8
1µ/35V
GND
C9
100n/50V
GND
C10
100n/50V
L2
81-1264EY-150MP3
D33U
C6
10µ/16V
GND
C7
10µ/16V
GND
R15
51k
R16
22k
GND
U2
VIN
CB
EN
FB
SW
GND
LMR50410XFDBVR
GND
Buck Regulator for 3.3V CSR8675
Rated for 3.3V 200mA
NOTE: Always ON!
power_board
24.04.2021 19:13:36
Sheet: 5/7

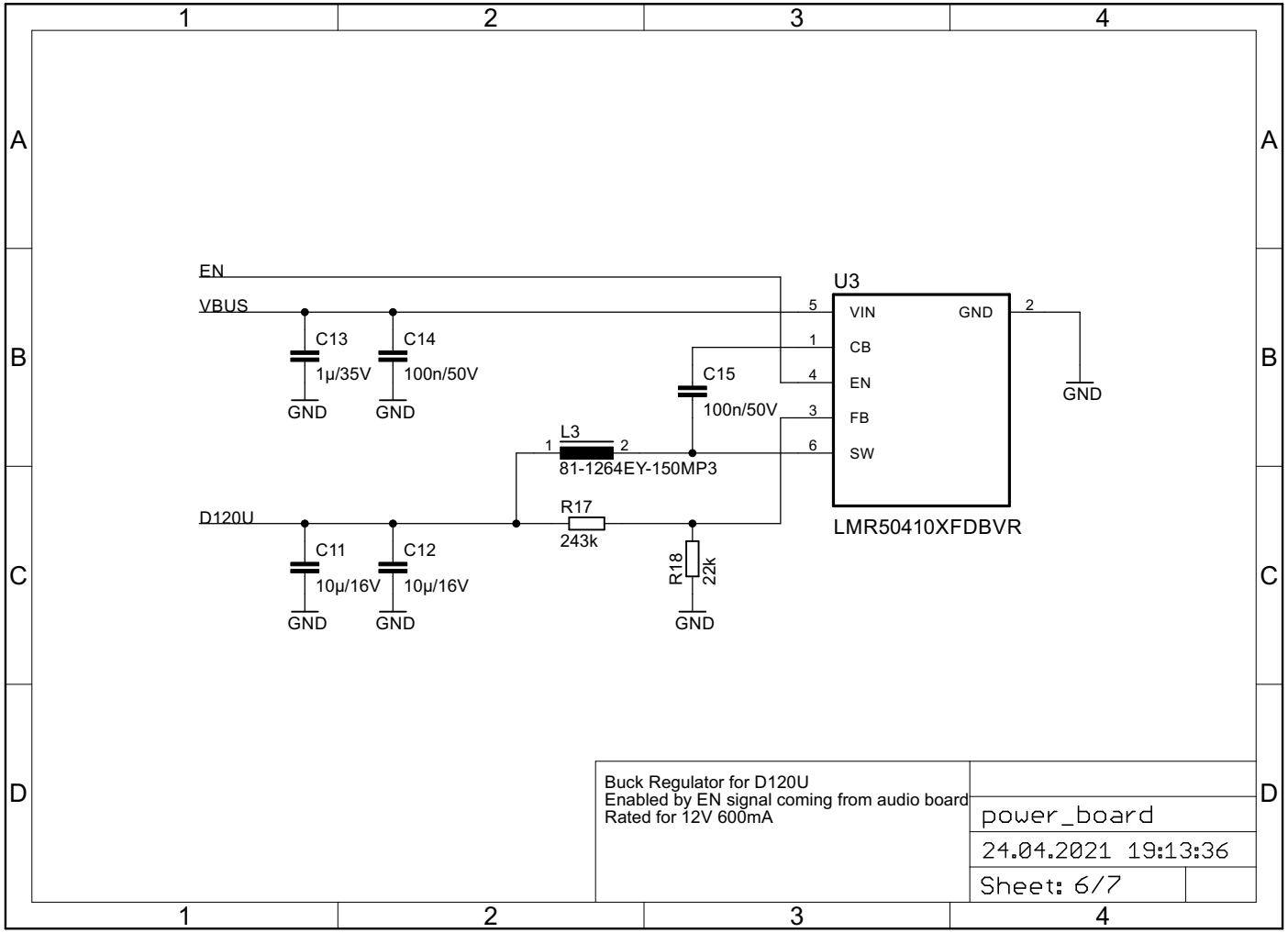
EN
VBUS
C13
1µ/35V
GND
C14
100n/50V
GND
C15
100n/50V
L3
81-1264EY-150MP3
D120U
C11
10µ/16V
GND
C12
10µ/16V
GND
R17
243k
R18
22k
GND
U3
VIN
CB
EN
FB
SW
GND
LMR50410XFDBVR
GND
Buck Regulator for D120U
Enabled by EN signal coming from audio board
Rated for 12V 600mA
power_board
24.04.2021 19:13:36
Sheet: 6/7

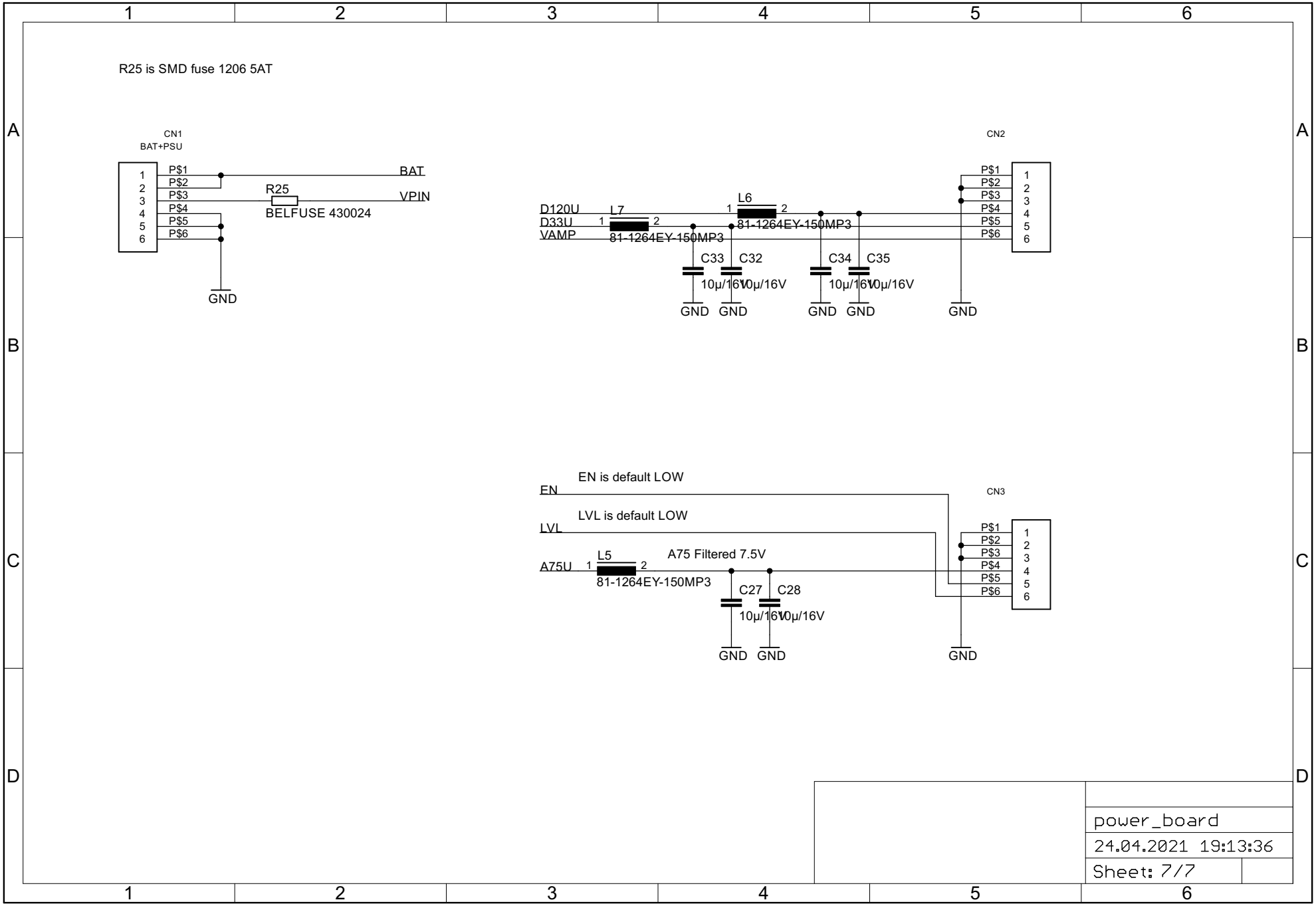
R25 is SMD fuse 1206 5AT
CN1
BAT+PSU
P$1
P$2
P$3
P$4
P$5
P$6
BAT
R25
VPIN
BELFUSE 430024
GND
CN2
D120U
D33U
VAMP
L7
L6
81-1264EY-150MP3
C33
C32
C34
C35
10µ/16V
GND
EN is default LOW
EN
LVL is default LOW
LVL
CN3
A75U
L5
A75 Filtered 7.5V
C27
C28
power_board
24.04.2021 19:13:36
Sheet: 7/7