AI Trash Sorting Robot (Trashboat)

by

Student Name
Owen Barnes
Felistus Karanja
Ryan Domathoti
Daniel Anoruo
Frankie Horter
Myles Burrows

Group Project Report

In partial fulfillment of the requirements for

COSC 465: Robotics

Spring-2026

Submitted to

Anik Mallik, PhD

Assistant Professor

Department of Computer and Information Sciences

Towson University

Towson, MD

Date of submission: 05/12/2026

Introduction

For this project we created an AI-powered trash-sorting robot. The robot that takes in top-down images of our waste plate and sends it through a Convolution Neural Network. The network determines if the waste on the tray is one of three things: Trash, Compost, or Recycle. After determining what the object is, the plate holding the object will rotate to face the respective bin and drop the object into it.

The purpose of our robot is to completely automate the process of sorting between different types of waste. The problem with normal trash cans is that many times humans are lazy and careless and do not put in the mental effort to put their waste into the correct bin. This doesn't affect our individual lives but it harms our efforts to re-purpose recyclable and compost-able which which in turn harms our planet. Our robot removes the variable of carelessness from the equation as all three types of waste are dropped onto the same plate and our automated process does the rest of the work.

This project used topics covered by the lecture notes on Computer Vision, AI & Deep Learning, Dynamics & Actuators, and finally Transformation, Rotation, Joints, and Degrees of Freedom. All of these were extremely helpful when creating certain elements of the project.

Literature Review

Currently in the field, there are several forms of this kind of project. We were originally inspired by the sorting cameras in our University Union. It was a system where you show your garbage to a camera, and it will tell you which bin you should place your garbage. This was designed by Intuitive AI's product, Oscar Sort[1]. We also took inspiration on the design of robot from the Bulgarian company, Ameru[2] with their product Smart Bin. Both of these real-life products were major inspirations for the design of our robot, combining ideas of both products into one.

Design and Assembly Description

0.1 Mechanical Design & Methods Used

We adopted two main systems for the physical build: a Planetary Gear System and a Tilting Table System.

- **Planetary Gear System:** We chose this for the main drive because it handles high torque in a small space. By using multiple gears to share the load, the robot can move heavy trash without straining the motor. Our design features an integrated outer ring gear that includes dedicated mounting points for the tilting system motors.

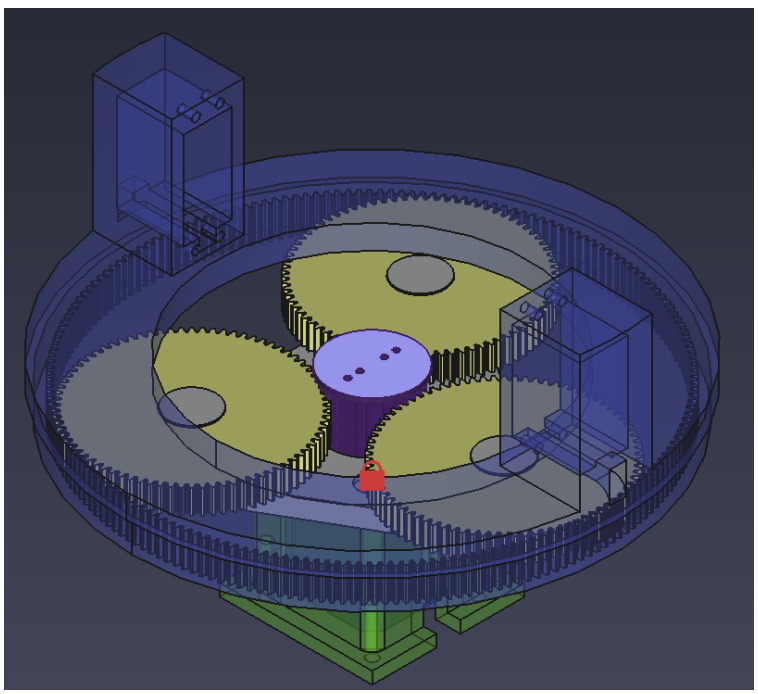

Figure 1: Planetary Gear Assembly with Integrated Tilting Motor Mounts

- **Tilting Table System:** This was designed for the actual sorting action. It uses a pivot point to quickly dump items into specified bins. By mounting the tilting motors directly onto the planetary ring, we reduced the overall footprint and improved mechanical stability.

0.2 Custom Fabrication and Component Modeling

To ensure seamless mechanical integration, a rigorous custom fabrication process was followed. This involved:

- **Motor Measurement and Modeling:** All actuators, including the primary Nema 17 driver and Servo tilting motors, were measured using precision calipers to establish exact dimensions for shaft diameter, mounting hole patterns and overall housing volume. These measurements were then used to create accurate 3D CAD models of each motor.

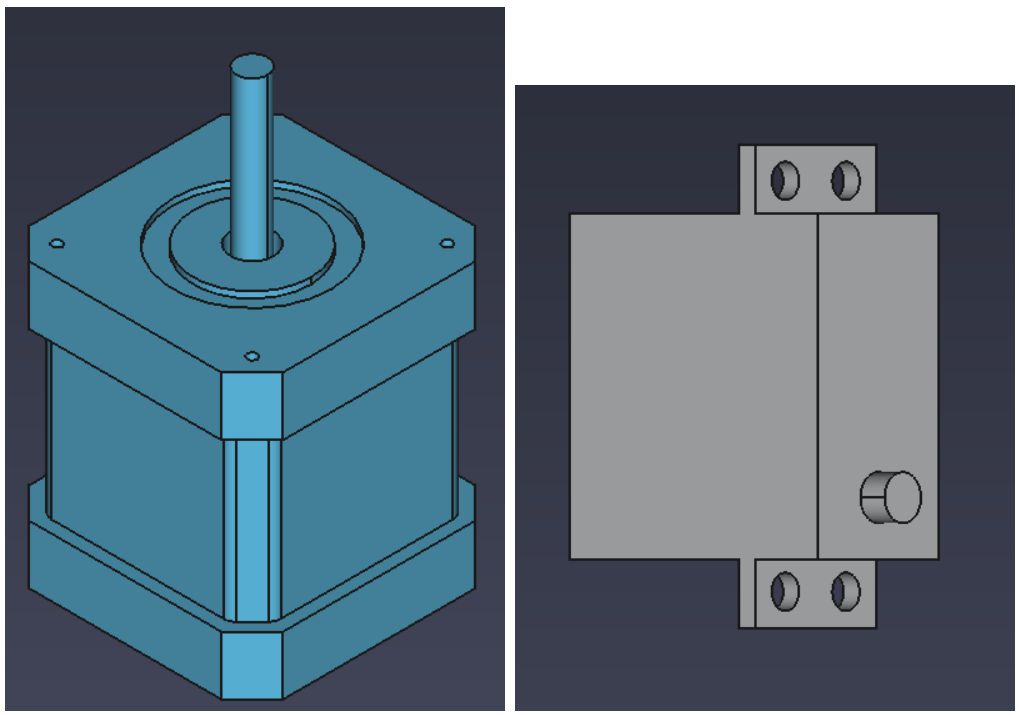

Figure 2: Nema 17 and Servo motor Cad Models

- **Integrated Chassis Design:** Using these models, the planetary gear housing was custom-designed to serve as both a gearbox and a structural chassis. The motor mounts were modeled directly into the ring gear to ensure zero-tolerance fitment and eliminate mechanical play during high-torque operations.

- **Tolerance Management:** We accounted for 3D printing and measurement discrepancies by padding all measurement by 0.02mm This ensured that the custom-fabricated

gears meshed smoothly with the motors without the need for extensive post-processing.

0.2.1 Assembled Design

With the assembled design, we have different containers for Trash, Recycling & Compost as well as a live feed of what the camera sees.

Figure 3: The assembled, finalized design of the Trashboat

0.2.2 Component Wiring

Here we have the Arduino, Raspberry Pi, and Nemo motor on the inside of the container, as well as wire managment.

Figure 4: The inner-workings/wiring of Trashboat

0.3 System Workflow

- **Assembly:** The planetary gearbox acts as the primary structural base. The tilting motors are secured into the built-in housings on the ring gear, which then drive the sorting plate.
- **Operation:** The planetary gears provide the rotational positioning, while the integrated motors trigger the tilting motion once the robot reaches the target bin.

AI Waste Classification Pipeline

We compared the performance of 3 neural networks on their ability to classify trash, recycle, and compost items across 12k+ images. These models included a Custom Convolutional Neural Network (CNN) engineered from scratch, ResNet18, and YOLOv8.

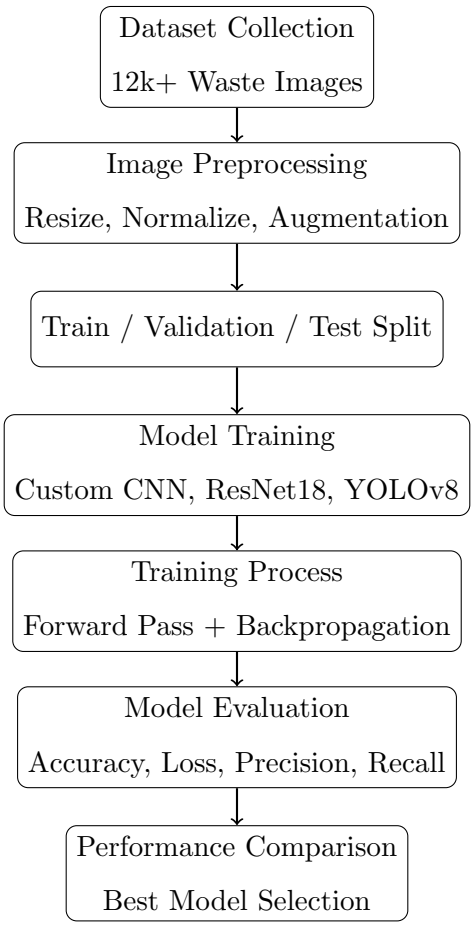

Figure 5: Deep learning training pipeline used for waste classification across trash, recycle, and compost datasets.

Our custom CNN processes images through convolutional layers that quickly learn important features such as edges, shapes, and textures. Following the convolutional Layers, we use ReLU activation functions, which help the network learn more complex patterns in the images. And finally, the Max pooling layers reduce the image size while keeping the most important information for classification.

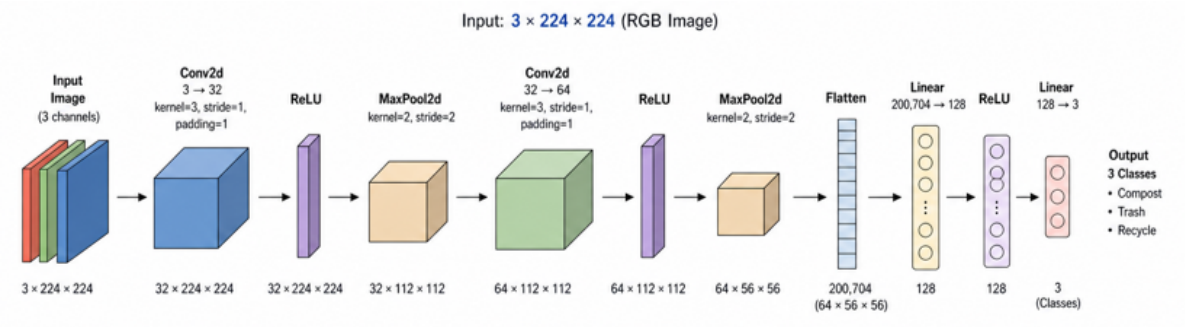

Figure 6: Custom CNN Architecture for Waste Classification

ResNet18 is a special kind of CNN, that also processes images through deep convolutional layers to learn important features such as edges, shapes, textures, and object patterns. Following the convolutional layers, the model uses Batch Normalization and ReLU activation functions to improve training stability and help the network learn more complex image representations. ResNet18 also uses residual shortcut connections, which allow the model to pass information between layers more efficiently while reducing performance degradation in deeper networks.

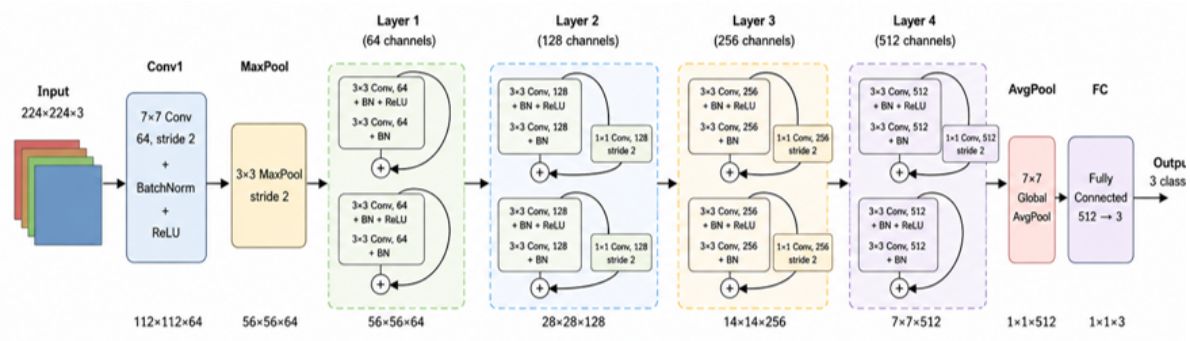

Figure 7: ResNet18 Architecture for Waste Classification

YOLOv8 is an enhanced CNN architecture that is utilized for image classification and real-time object detection. Following the convolutional layers, the model uses Batch Normalization and SiLU activation functions, which help the network learn more complex patterns while improving training performance. And finally, the detection head predicts the class and location of objects while keeping the most important information needed for accurate classification and detection.

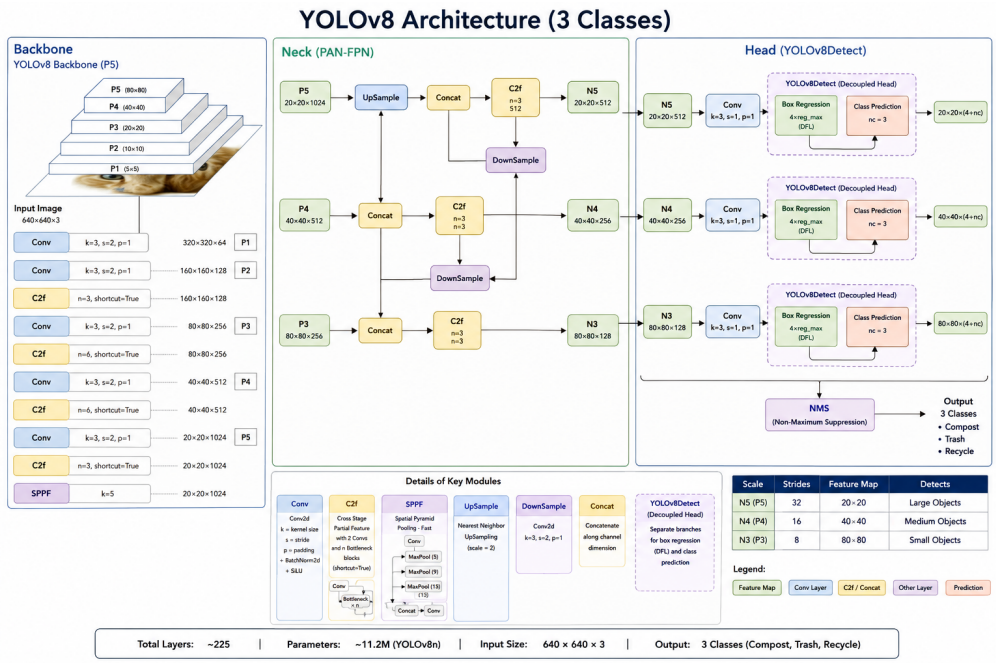

Figure 8: Yolov8 Architecture for Waste Classification

1. Computer Vision Implementation

Using Raspberry Pi as the processing unit, we were able to both run our AI models in real time through our pipeline system. Utilizing OpenCV, we created a loop that is triggered via motion detection, constantly comparing the previous frame to the current frame to detect movement. This process was implemented for when an item is dropped into the plate of our robot.

Table 1: Motion Detection State System

State	Description
LIVE	Camera feed is active, waiting for motion.
WAIT	Short delay to stabilize object before capture.
CAPTURED	Image is frozen and processed.
DISPLAY	Result is shown for a fixed duration.

The system is split into 4 states: Live, Wait, Captured, and Display, where large amounts of detected movement transition the system from the Live state into the Wait and Captured

stages before finally displaying the classification results. This process is also live-streamed from the camera feed into Flask for real-time monitoring through a web interface. The label predicted is then sent to the Arduino to move the object into the correct bin.

Evaluation Metrics

Table 2: Evaluation Metrics Used for Model Performance

Metric	**Description**
Accuracy	Measures the overall percentage of correct predictions made by the model.
Precision	Out of all predicted positives, how many were actually correct.
Recall	Out of all actual positives, how many were correctly identified by the model.
F1-Score	Represents the balance between precision and recall using their harmonic mean.

After training, we conducted experiments over 10 iterations to evaluate which model performed best for real-time classification and detection. These repeated tests helped analyze the consistency, stability, and overall effectiveness of each model in live deployment scenarios.

Performance Results and Discussion

In general, all models performed relatively well during on all 3 datasets (Training, Testing, and Validation datasets), the problems arose when we had to modify our model for real time classification/detection.

1.1 Custom CNN Performance

Our custom-built Convolutional Neural Network (CNN) performed well across the training, testing, and validation datasets. The model achieved an accuracy of approximately

98–99% on the training dataset while averaging around 95% on both the testing and validation datasets. Overall, the model demonstrated strong performance and consistency during classification tasks.

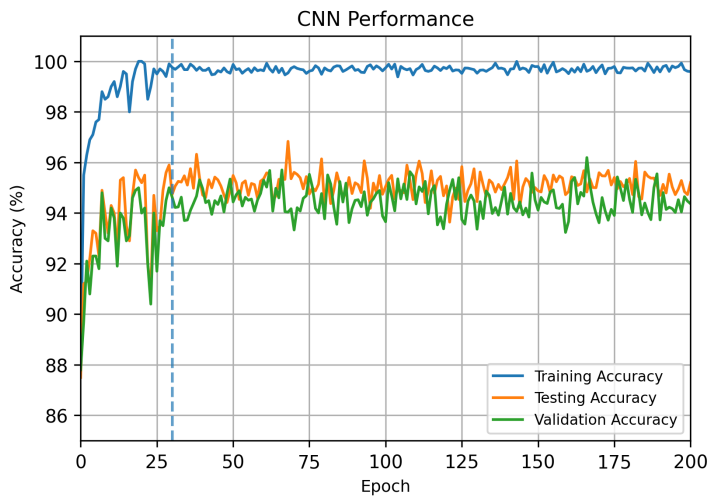

Figure 9: Custom CNN Accuracy

CNN Evaluation Metrics

Metric	Score (%)
Accuracy	95.2
Precision	94.8
Recall	94.3
F1-Score	94.5

Despite these metrics, when we deployed our model for real-time detection, it performed poorly in correctly classifying objects in live environments. To further evaluate performance, we conducted 10 real-time classification iterations using different waste items. Out of the 10 iterations, only 4 classifications were correct.

Iteration	Predicted Output	Actual Output
1	Trash	Trash
2	Recycle	Compost
3	Recycle	Recycle
4	Compost	Trash
5	Compost	Compost
6	Trash	Recycle
7	Compost	Trash
8	Recycle	Trash
9	Trash	Trash
10	Compost	Recycle

1.2 ResNet18 Performance

Similar to our custom-built neural network, the ResNet18 model performed exceptionally well across all datasets. The model achieved an accuracy of nearly 100% on the training dataset while maintaining approximately 97–98% accuracy on both the testing and validation datasets. Overall, the model demonstrated strong generalization and high classification performance.

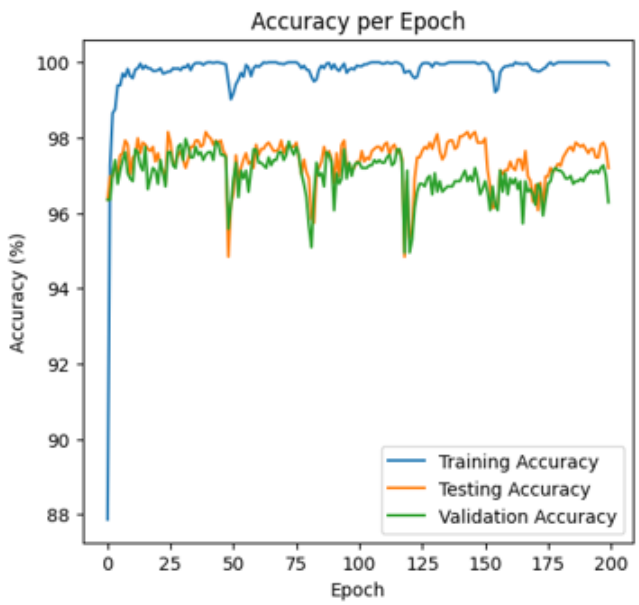

Figure 10: ResNet18 Performance

ResNet18 Classification Metrics by Class

Class	Precision	Recall	F1
Trash	0.880	0.920	0.900
Compost	0.965	0.966	0.965
Recycle	0.935	0.924	0.930
Accuracy	0.951	0.951	0.951

Despite these metrics, when we deployed the ResNet18 model for real-time detection, the model still struggled with consistent object classification in live environments. Out of the 10 iterations, only 5 classifications were correct.

Iteration	Predicted Output	Actual Output
1	Recycle	Recycle
2	Recycle	Recycle
3	Recycle	Recycle
4	Compost	Trash
5	Trash	Compost
6	Trash	Trash
7	Recycle	Compost
8	Trash	Trash
9	Compost	Recycle
10	Trash	Compost

1.3 YoloV8 Performance

This model performed well overall, with the training pipeline recording a testing dataset accuracy of approximately 98%. Compared to the previous models, it achieved the highest testing accuracy, demonstrating stronger overall classification performance and generalization capabilities.

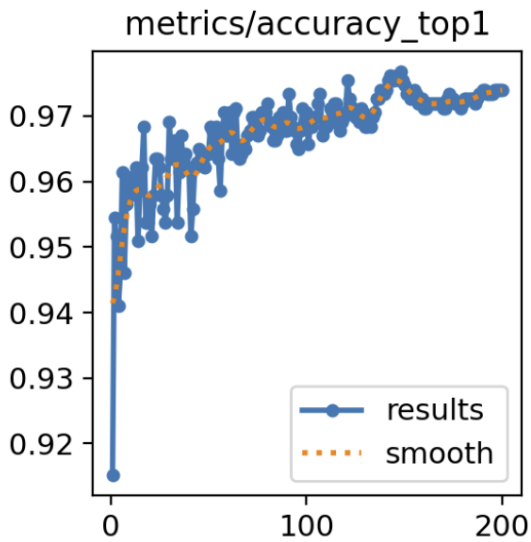

Figure: YOLOv8 Testing Accuracy

YOLOv8 Classification Metrics

Class	Precision	Recall	F1
Compost	0.97	0.97	0.97
Recycle	0.98	0.98	0.98
Trash	0.98	0.98	0.98
Accuracy	0.98	0.98	0.98

When deploying our model for real-time waste detection and classification, it achieved higher performance in comparison to the previous models. Out of the 10 iterations, the model

correctly classified 8 of the waste items. Further testing showed that the model performed exceptionally well when classifying compost and recycle materials in comparison to trash items.

Iteration	Predicted Output	Actual Output
1	Recycle	Recycle
2	Recycle	Recycle
3	Recycle	Recycle
4	Compost	Compost
5	Compost	Compost
6	Compost	Compost
7	Compost	Trash
8	Trash	Trash
9	Trash	Trash
10	Recycle	Trash

Challenges

The system faced both hardware and software challenges. Upon first gaining access to hardware, physical limitations proved to be a significant challenge. The original servos moved 180 degrees although our logic utilized a 360 degree model which we had adapted to. We faced power limitations when wiring the servos to the Arduino as each servo was not receiving enough power. External sources through outlets were utilized.
There were also time constraints that led to some patch-job fixes with certain hardware elements. For example, there was not enough time to remake the outer gear from the planetary gear system, so we modified it to account for the shift in the tilting table system.

Configuring a learning model to detect trash was difficult as we had researched many alternatives that would give us accurate readings. some models incorrectly identified objects with a trash or recycle bias. Adjusting parameter weights and increasing the amount of model data helped us to give more accurate readings.

A significant software challenge was enabling communication between the Raspberry Pi

and the Arduino. Both the Raspberry Pi and Arduino have USB-A and USB-C ports so using those main USB channels, direct communication between the microcomputer and micro controller were possible through serial port 9600.

Future Work

Although the AI Trash Detecting Robot provided strong results, much could be improved on.

Firstly the servo assembly could be cleaned up a little more. The servos are held in place by friction which over time will eventually fail. Having a dedicated housing in plastic composite or stamped metal would help with the integrity of the robot.

Having the model self train itself would only prove to be beneficial to the environment around it. Implementing a user input "Check or X" option to tell whether the robot was right or not would help increase the accuracy of the model.

The application of this would work in a low density area like a bedroom, living room, or office cubicle. For larger applications like cafeterias and public parks, the turntable design would need to act quicker and more efficiently from object detection to sorting the object.

Conclusion

In conclusion, the AI Trash Sorting Robot demonstrates how robotics and deep learning can be combined to automate waste separation efficiently. By integrating computer vision, neural network classification, mechanical actuation, and digital logic, the system successfully identifies waste items. These items are then distributed into their respective locations(Trash, Recycle, Compost). Our testing showed that machine learning models can provide accurate predictions when deployed on hardware such as the Raspberry Pi. Although challenges such as real-time performance and hardware limitations were encountered, they provided valuable opportunities for improvement and learning. Overall, this project shows strong potential for future waste management systems that can reduce human error and support environmental sustainability.

References

[1] Intuitive AI. *Intuitive AI*. 2014. URL: https://intuitiveai.ca/oscar-sort.

[2] Ameru. *Ameru - AI Smart Bins for Sustainable Offices Public Spaces*. Nov. 2025. URL: https://ameru.ai/.

[3] compost classification. *Compost Dataset*. 2025. URL: https://universe.roboflow.com/compost-classification/compost-aipda.

[4] Suman Kunwar. *Garbage Dataset*. 2026. DOI: 10.34740/KAGGLE/DSV/14925046. URL: https://www.kaggle.com/dsv/14925046.

[5] Anik Malik. *Class Discussion*. May 2026.

Appendices

1.4 Training Hyperparameters

The following hyperparameters were used during the training experiments for the deep learning models.

Table 3: Training Hyperparameters

Hyperparameter	**Value**
Learning Rate	1×10^{-4}
Epochs	200
Optimizer	Adam Optimizer
Loss Function	CrossEntropy Loss

2. Robot Communication Pipeline

The following diagram demonstrates how the Raspberry Pi processes images using the YOLOv8 classifier and sends the predicted waste category to the Arduino micro controller, which then controls the movement of the robot.

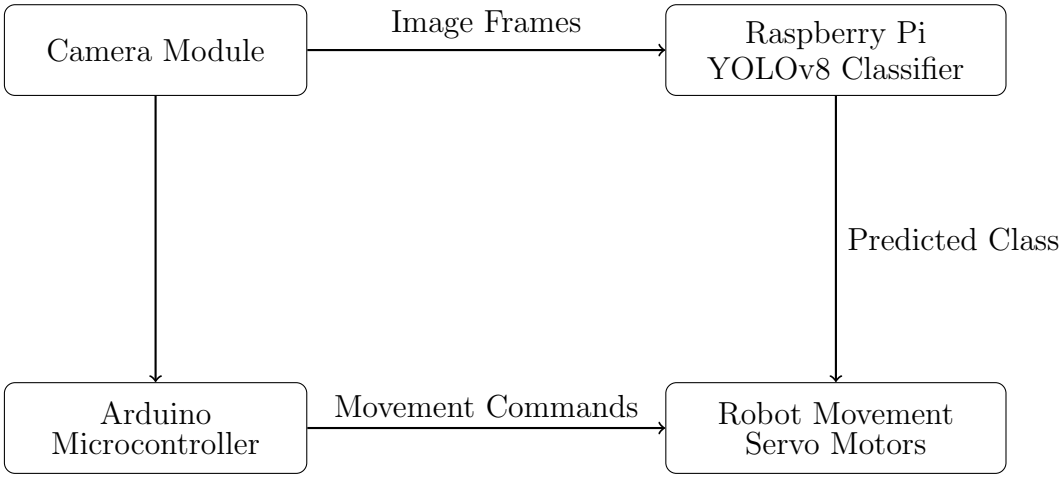

Figure 11: YOLOv8 Waste Classification Communication Pipeline