REVISION HISTORY				
ECO	REV	DESCRIPTION	APPROVED	DATE
-	4	PRODUCTION	ZP	01-18-18

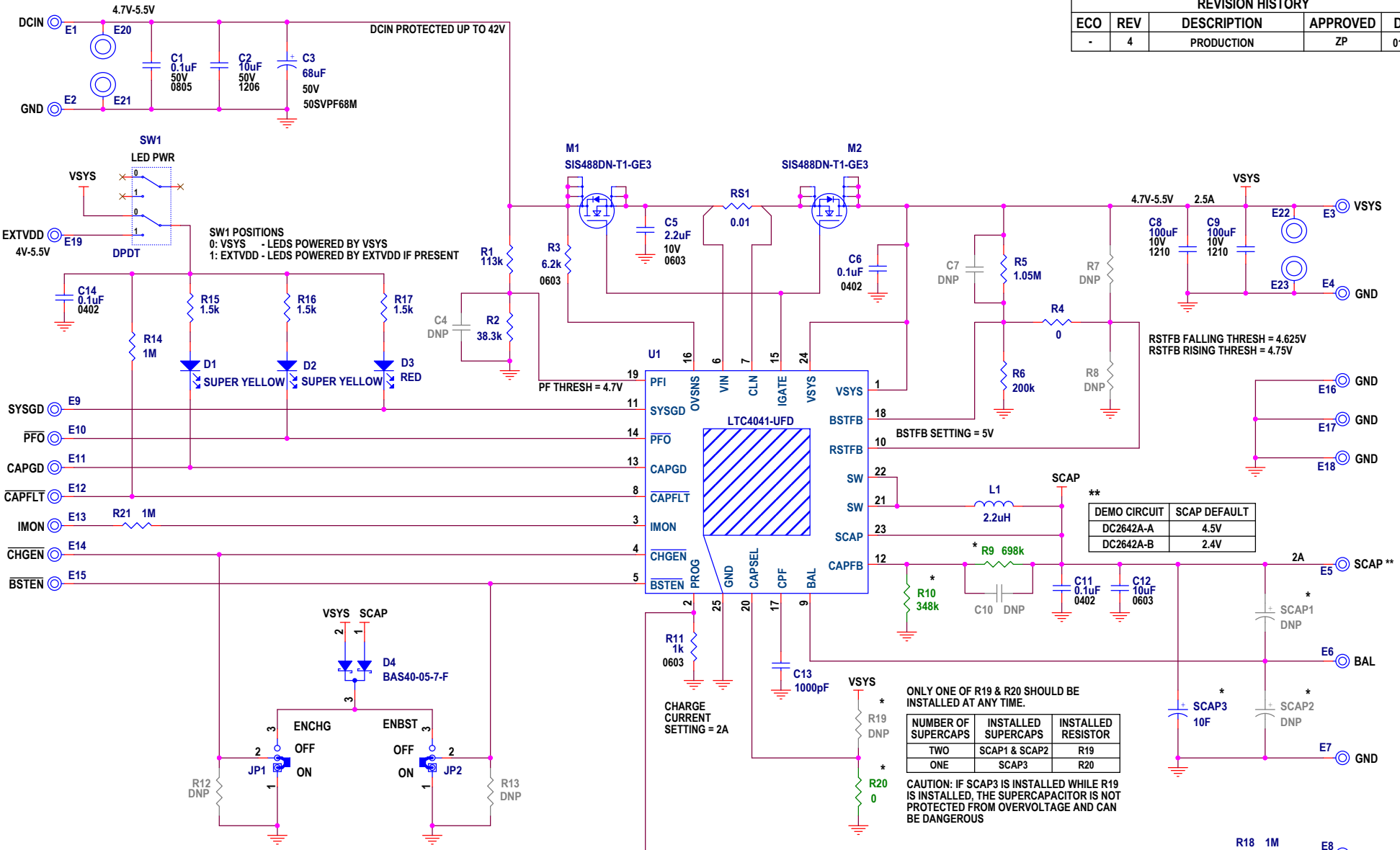

DEMO CIRCUIT	SCAP DEFAULT
DC2642A-A	4.5V
DC2642A-B	2.4V

ONLY ONE OF R19 & R20 SHOULD BE INSTALLED AT ANY TIME.

NUMBER OF SUPERCAPS	INSTALLED SUPERCAPS	INSTALLED RESISTOR
TWO	SCAP1 & SCAP2	R19
ONE	SCAP3	R20

CAUTION: IF SCAP3 IS INSTALLED WHILE R19 IS INSTALLED, THE SUPERCAPACITOR IS NOT PROTECTED FROM OVERVOLTAGE AND CAN BE DANGEROUS

DO NOT CHANGE JP1 OR JP2 POSITIONS DURING OPERATION UNLESS R12 OR R13 ARE INSTALLED, RESPECTIVELY.

TO CONTROL $\overline{\text{CHGEN}}$ OR $\overline{\text{BSTEN}}$ FROM AN EXTERNAL MICROCONROLLER, REMOVE THE JUMPER FROM JP1 OR JP2, RESPECTIVELY.

* ASSEMBLY VERSION TABLE

SKU NO.	SCAP1	SCAP2	SCAP3	R19	R20	R9	R10
DC2642A- A	LOADED	LOADED	DNP	LOADED	DNP	1.5M	324k
DC2642A- B	DNP	DNP	LOADED	DNP	LOADED	698k	348k

PCA ADDITIONAL PARTS

MP1	STANDOFF,NYLON,SNAP-ON,0.625"
MP2	STANDOFF,NYLON,SNAP-ON,0.625"
MP3	STANDOFF,NYLON,SNAP-ON,0.625"
MP4	STANDOFF,NYLON,SNAP-ON,0.625"
LB1	LABEL
PCB1	PCB, DC2642A REV04
STNCL1	TOOL, STENCIL, 700-DC2642A REV04

NOTES: UNLESS OTHERWISE SPECIFIED
1. RESISTORS: OHMS, 0402, 1%, 1/16W
2. CAPACITORS: 0402, 10%, 50V

CUSTOMER NOTICE

LINEAR TECHNOLOGY HAS MADE A BEST EFFORT TO DESIGN A CIRCUIT THAT MEETS CUSTOMER-SUPPLIED SPECIFICATIONS; HOWEVER, IT REMAINS THE CUSTOMER'S RESPONSIBILITY TO VERIFY PROPER AND RELIABLE OPERATION IN THE ACTUAL APPLICATION. COMPONENT SUBSTITUTION AND PRINTED CIRCUIT BOARD LAYOUT MAY SIGNIFICANTLY AFFECT CIRCUIT PERFORMANCE OR RELIABILITY. CONTACT LINEAR TECHNOLOGY APPLICATIONS ENGINEERING FOR ASSISTANCE.

THIS CIRCUIT IS PROPRIETARY TO LINEAR TECHNOLOGY AND SUPPLIED FOR USE WITH LINEAR TECHNOLOGY PARTS.

APPROVALS	
PCB DES.	NC
APP ENG.	ZP

IC NO. LTC4041

SKU NO. SEE ASSY TABLE

ANALOG DEVICES
AHEAD OF WHAT'S POSSIBLE ™
1630 McCarthy Blvd.
Milpitas, CA 95035
Phone: (408)432-1900
Fax: (408)434-0507
www.analog.com

TITLE: DEMO CIRCUIT SCHEMATIC,
2.5A SUPERCAPACITOR BACKUP POWER MANAGER

PCA BOM: 700-DC2642A_REV04
PCA ASS'Y: 705-DC2642A_REV04

SCHEMATIC NO. AND REVISION: 710-DC2642A_REV04

SIZE: N/A | SCALE = NONE | DATE: 01-18-18 | SHEET 1 OF 1