Solution to Tutorial exercises: Week 2.

Exercise 1: Expanding the Simple LV network

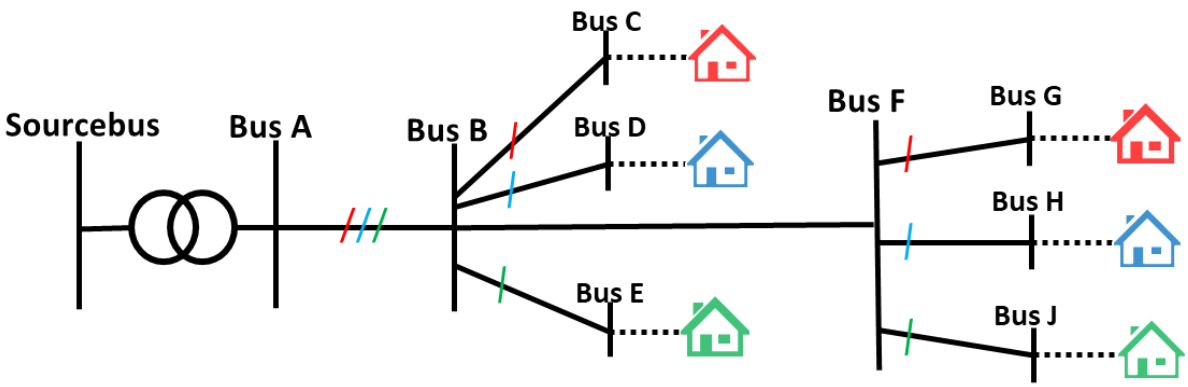

E1.2: Extract the voltages (in pu) of all the houses for each loading level. Considering that the upper and lower statutory voltage limits are +10% and - 6% of nominal, are those voltages compliant with these limits at all times? If not, why?

Solution:

After running the simulation, the following voltages are obtained:

Load ID	Voltage (pu)
Load_1	0.957
Load_2	0.952
Load_3	0.945
Load_4	0.939
Load_5	0.922
Load_6	0.920

The voltages are not compliant with the statutory limits. In particular, Loads 4, 5, and 6 fall below 0.94 pu.

E1.3: Once you add the PV systems, extract the voltages (in pu) of all the houses for each loading level. Are those voltages compliant with the statutory limits at all times? If not, why?

Solution:

Let's remember that the PVs are added to Loads 4,5 and 6 only. So, the actual sentences to add them are the following:

```
# PVs
DSSText.Command = 'new PVSystem.PV4 bus1=G.1 phases = 1 kva = 5 pmpp = 5
pf = 1 kV=(0.4 3 sqrt /) model=1'
DSSText.Command = 'new PVSystem.PV5 bus1=H.1 phases = 1 kva = 5 pmpp = 5
pf = 1 kV=(0.4 3 sqrt /) model=1'
DSSText.Command = 'new PVSystem.PV6 bus1=J.1 phases = 1 kva = 5 pmpp = 5
pf = 1 kV=(0.4 3 sqrt /) model=1'
```

After running the simulations, the following voltages are obtained:

Load ID	Voltage (pu)
Load_1	0.970
Load_2	0.966
Load_3	0.959
Load_4	0.966
Load_5	0.950
Load_6	0.948

The voltages are now within the statutory limits. This outcome is attributable to the PV generation, which injects active power locally and thereby increases the voltage magnitude at the corresponding buses.

Exercise 2: Modelling a New Simple LV Network

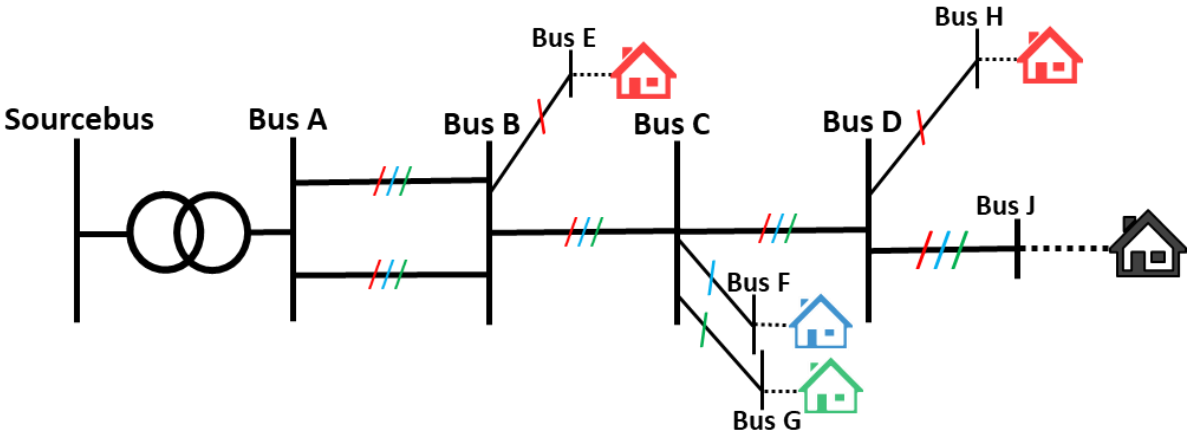

E2.3: Calculate the total annual energy losses of the circuit in kWh. Is this value different from the previous case (Figure 4)? If so, why?

Solution:

Exercise E2.3 asks for the annual energy losses after adding the PV systems. To determine this, simulate the three loading cases: peak demand (100% of the value specified in Table 3 of the Tutorial), medium demand (75% of peak demand), and minimum demand (25% of peak demand), both with and without PV systems. The resulting active power losses are shown below:

	Active Losses at Peak Demand	Active Losses at Medium Demand	Active Losses at Low Demand
Before PVs	2.182 kW	1.177 kW	0.121 kW
After PVs	0.746 kW	0.278 kW	0.128 kW

Using the annual load duration values specified in Table 4 of the Tutorial, the total annual energy losses are as follows:

	Annual losses
Before PVs	$(1750\ h \cdot 2.182\ kW) + (4380\ h \cdot 1.177\ kW) + (2630\ h \cdot 0.121\ kW) = \mathbf{9291.690\ kWh}$
After PVs	$(1750\ h \cdot 0.746\ kW) + (4380\ h \cdot 0.278\ kW) + (2630\ h \cdot 0.128\ kW) = \mathbf{2857.584\ kWh}$

The results differ due to the influence of the PV systems. In this case, the PV generation supplies the demand of the houses where it is installed first, and any surplus is exported to the rest of the circuit. As a result, less current is drawn from the transformer, which reduces active losses along the feeder.