# TEAM NAME : ORESHNK

## Competition: TRAILBLAZE

| | | | |
|---|---|---|---|
| Name | Arkadeep Nag | City | Jaipur |
| Branch | Electrical and Computer Eng. (B.Tech) | Email | nagarkadeep.97@gmail.com |
| Institute Name | Manipal University Jaipur | Contact No. | +918391053763 |
| Cogni ID | COGNI2054321 | | |

| | | | |
|---|---|---|---|
| Name | B. Shree Shreyas Raj | City | Jaipur |
| Branch | Electrical and Computer Eng. (B.Tech) | Email | ironmamba18@gmail.com |
| Institute Name | Manipal University Jaipur | Contact No. | +919136935049 |
| Cogni ID | COGNI2054703 | | |

| | | | |
|---|---|---|---|
| Name | Rahul Konar | City | Kolkata |
| Branch | Computer Science and Eng. (B.Tech) | Email | konarrahul6915@gmail.com |
| Institute Name | University of Engineering and Management , Kolkata | Contact No. | +919564402491 |
| Cogni ID | COGNI2055891 | | |

| | | | |
|---|---|---|---|
| Name | Aniket Yadav | City | Jaipur |
| Branch | Electronics and Communication Eng. (B.Tech) | Email | iganiketyd.3030@gmail.com |
| Institute Name | Manipal University Jaipur | Contact No. | +918962711209 |
| Cogni ID | COGNI2055863 | | |

| | | | |
|---|---|---|---|
| Name | Aryan Pathak | City | Jaipur |
| Branch | Computer Science and Bioscience Eng. (B.Tech) | Email | aryanpathak3468@gmail.com |
| Institute Name | Manipal University Jaipur | Contact No. | +917905890343 |
| Cogni ID | COGNI2055890 | | |

# 16 Sensor MUX Fastest Line Follower Bot


## Abstract

This project outlines the design and implementation of a high-speed line follower robot with an ultra-high-resolution 16-sensor optical array. The system consists of sixteen TCRT5000 infrared reflective sensors interfaced by a 74HC4067 16-channel analog multiplexer to an Arduino Nano microcontroller. This high-density sensor configuration allows for precise track position estimation and sophisticated PID (Proportional-Integral-Derivative) control logic.

The electronics are integrated onto a custom PCB using 1206-sized Surface Mount Device (SMD) passive components: a compromise of compact design with easy manual assembly and thermal stability. Power is supplied through two 14500 Lithium-Ion batteries in series (7.4V), regulated down to 5V through an L7805CV linear regulator for the logical components. For locomotion, there are two 6V N20 micro-metal gear motors driven by a TB6612FNG dual-channel H-bridge motor driver. The whole mechanical assembly is supported on a 21mm metal ball caster and high-traction RD-34 wheels, providing a very stable platform for doing high-velocity navigation on competition-standard tracks.


## Index


1. **Design Overview**
2. **Driving Mechanism**
3. **Sensors Used**
4. **Motors Used**
5. **Complete List of Materials Used**
6. **Innovation**
7. **Conclusion**

## Design Overview

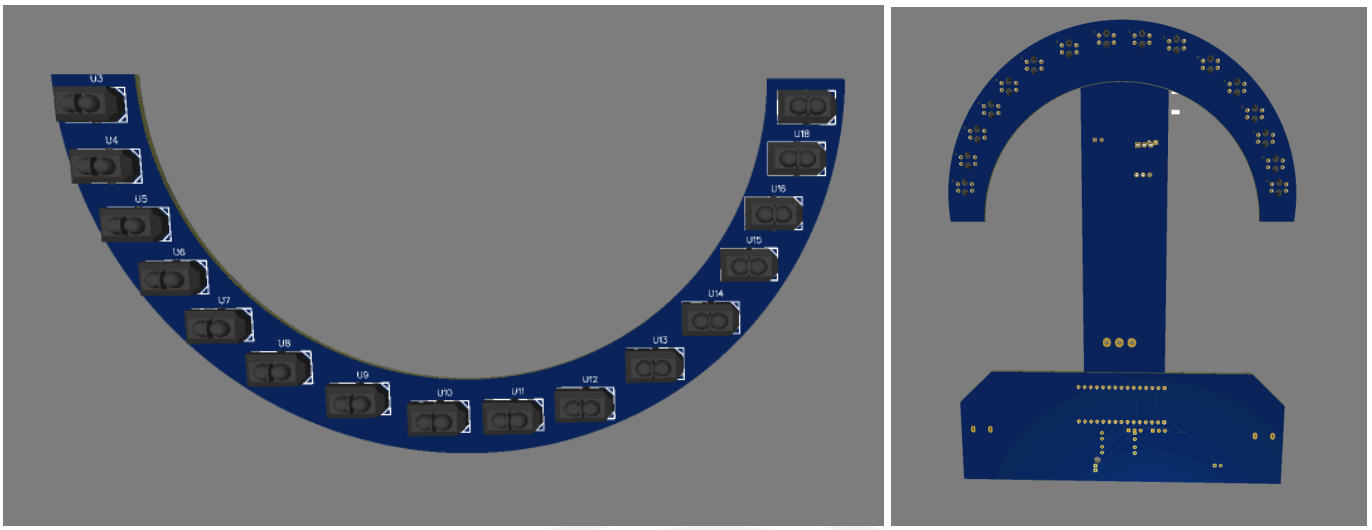


Fig 1.1 - This features our Robotic Head with 16 sensors and Robot Figure

The design principle of our bot features a curved head custom printed circuit board , with all the 16 LIDAR Sensors featuring in the top , the 16 LIDAR sensors offers a precise focal length from the ground even during banking, also this helps in boosting high precision movement while maintaining a high speed while turning at sharp turns.

## Compliances

The robot is under 25x25x25 cm , the robot does not use any battery >13V , the robot uses IR sensors.

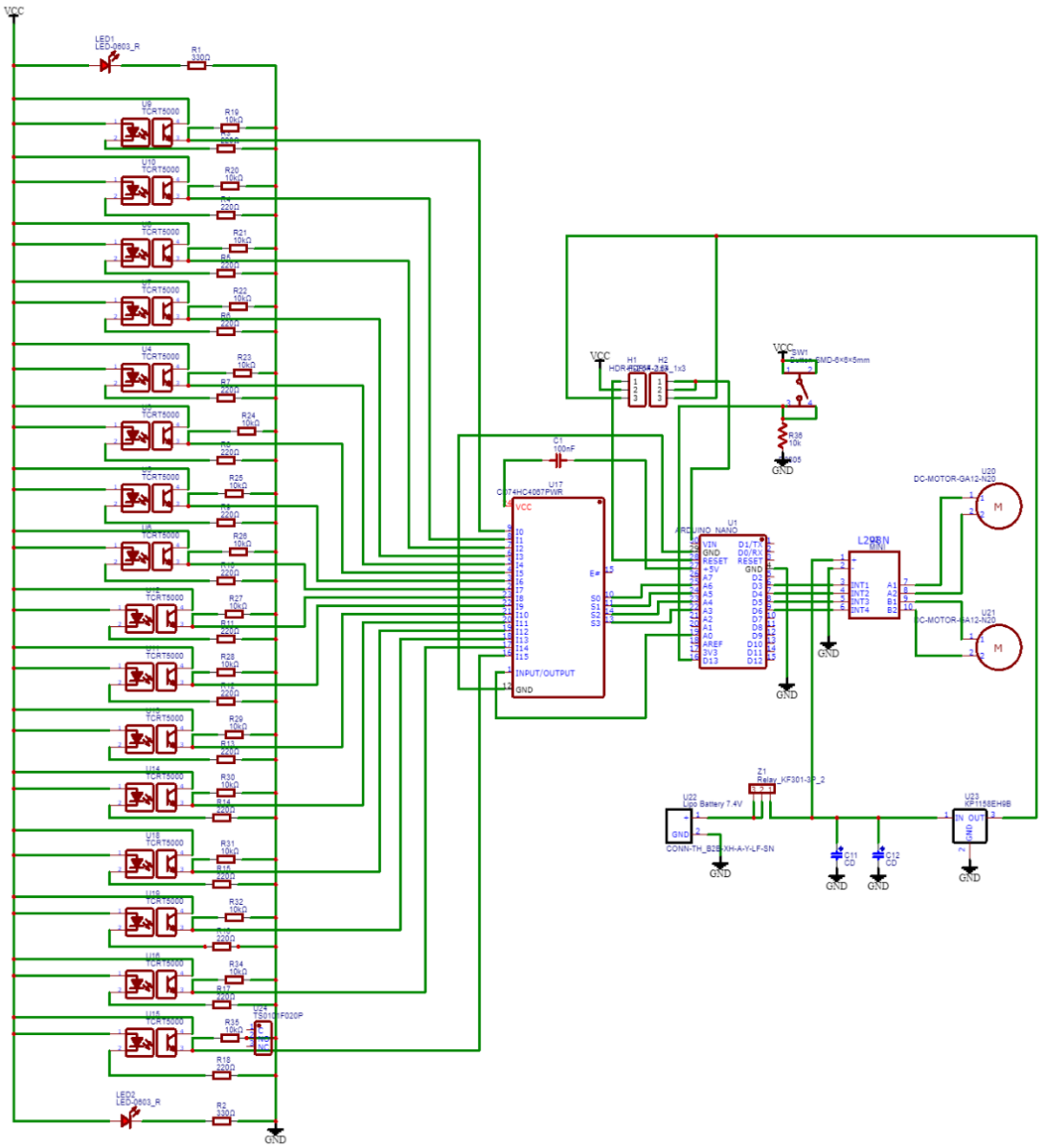


Drawn by Arkadeep Nag

| | | |
|---|---|---|
| TITLE: PCB_LAYOUT | | REV: 1.0 |
| EasyEDA | Company: Oreshnk | Sheet: 1/1 |
| | Date: 2026-02-08 Drawn By: Arkadeep Nag | |

Fig 1.2 - EasyEDA circuit diagram of the LFR

**Driving Mechanism**

We utilized a high-efficiency differential drive method, which makes use of a TB6612FNG Dual H-Bridge, resulting in no voltage drops internally, thus enabling maximum power extraction from a 7.4V Li-Po battery pack. Its propulsion makes use of two 6V N20 Micro Gearmotors, rated to deliver a no-load speed of 2000 RPM, thus providing the much-needed velocity that gives this line follower its competitiveness in racing line following contests. The positioning of this bot in a racing track is further enhanced by the employment of RD-34 Traction Wheels, which make sure that friction is provided for a stable run. The bot's sturdiness while making turns is assured by a ball caster fixed at its front, with a diameter of 15 mm, which serves as a pivot point due to its lower friction. By varying, through Pulse Width Modulation (PWM) methods, the signals sent to these motors, this bot gains its agility, thereby enabling it to make sharp turns at high speeds and thus stay on its lane.

A. For motor control we are using the TB6612FNG Dual H-Bridge - it reduces the voltage loss from source to the motors
B. For motors we have used 2 6V N20 motors with 2000RPM
C. For Tyres we have used RD-34 high traction wheels
D. Stability
    - Using differential drive (i.e moving the two motors at different speeds), the bot can execute sharp turns
    - A 15mm ball caster is fixed at the front , this caster provides a low friction pivot point, ensuring that the 14500 x 2 battery pack and the PCB does not create huge drags during turns.

## Sensors used

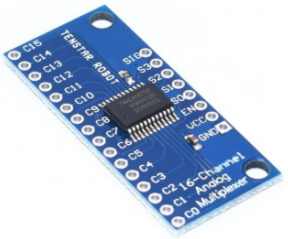

We have used the TCRT5000 IR sensors in an array of 16 connected to the CD74HC4067PWR sensor . This allows the PID controller to begin correcting the motor speed earlier, resulting in smoother transitions and higher maintainable velocities. Each TCRT5000 IR LED is paired with a 220Ω 1206 resistor. A 10kΩ 1206 pull-up resistor is used on each phototransistor.

## Motors Used

Fig - N20 motors and compatible RD-34 Wheels

We have used GA12-N20 6V 2000RPM Micro DC Metal Gear Reduction Motor for high speed movement of the bot.

## Complete List of Materials Used

1) Nano CH340 Chip Board Without USB Cable Compatible with Arduino (Soldered)
2) CD74HC4067 16 Channel Analog Multiplexer Breakout Module
3) 330 Ohm 1/4W 1206 Surface Mount Chip Resistor
4) 10k Ohm 1/4W 1206 Surface Mount Chip Resistor

5) Yageo 220 Ohm 1/4W 1206 Surface Mount Resistor
6) 330 Ohm 1/4W 1206 Surface Mount Chip Resistor
7) TCRT5000 Reflective IR Optical Sensor
8) 0.1uF Capacitor SMD:C 1206
9) ERS1EM471G16OT-AISHI -470uF 25V ±20% Plugin,D10xL16mm Aluminum Electrolytic Capacitors – Leaded ROHS
10) L7805CV-Stmicroelectronics-Linear Voltage Regulator, 7805, Fixed, Positive, 10V To 35V In, 5V And 1.5A Out, TO-220-3
11) XL-3216UBC-FB-XINGLIGHT-Reverse Mount Blue 120° 1206 LED Indication – Discrete ROHS
12) XL-3216SYGC-FB-XINGLIGHT-Reverse Mount Yellow-green 120° 1206 LED Indication – Discrete ROHS
13) 34mm Mini Car N20 Motor Rubber Small Wheel
14) MINI 3PI Car N20 Caster Robot Ball Wheel, Small Robotics Wheel
15) Aluminum Heatsink for TO-220
16) 0.1 uF 50V Ceramic Capacitor (Pack of 10)
17) 1N4007 Diode
18) 40-Pin Header Male
19) TB6612FNG Dual DC Motor Driver
20) 40-Pin Header FeMale

**Innovation**

Conventionally most of the ideas we have seen regarding the MUX based Fastest Line followers , they use 8 IR sensor arrays , although it works , but the precision is found to be proportional to the number of sensors , so we have increased the number of IR Sensors. The curved geometry , which cannot be called innovation , but integrating it gives very high control with speed to the bot, allowing it to have faster sharp turns. The usage of TB6612FNG MOSFET-based drivers reduces internal voltage drop and heat generation; more power is delivered to the 6V N20 motors.

## Conclusion

By utilizing the CD74HC4067 MUX to essentially channel the signals of a 16-channel IR system into a single signal to a single analog input, the design is able to take full advantage of the processing bandwidth of the Arduino Nano while retaining a highly detailed spatial image of the track. This is combined with a TB6612FNG-based locomotion system that optimizes MOSFET-based switching to produce a low power loss profile while ensuring that the 2000 RPM N20 motors receive a constant level of torque through the 7.4V 14500 battery pack. The combination of a highly traction-ready RD-34 wheel and ball caster pivot ensures that the chassis itself can operate a highly aggressive differential steering system necessary for the high velocities achieved on the track.

## Link to access CAD Model

https://drive.google.com/drive/folders/19NLFERryDEO3YhbvW4rdYdxNvMzTelQK?usp=sharing