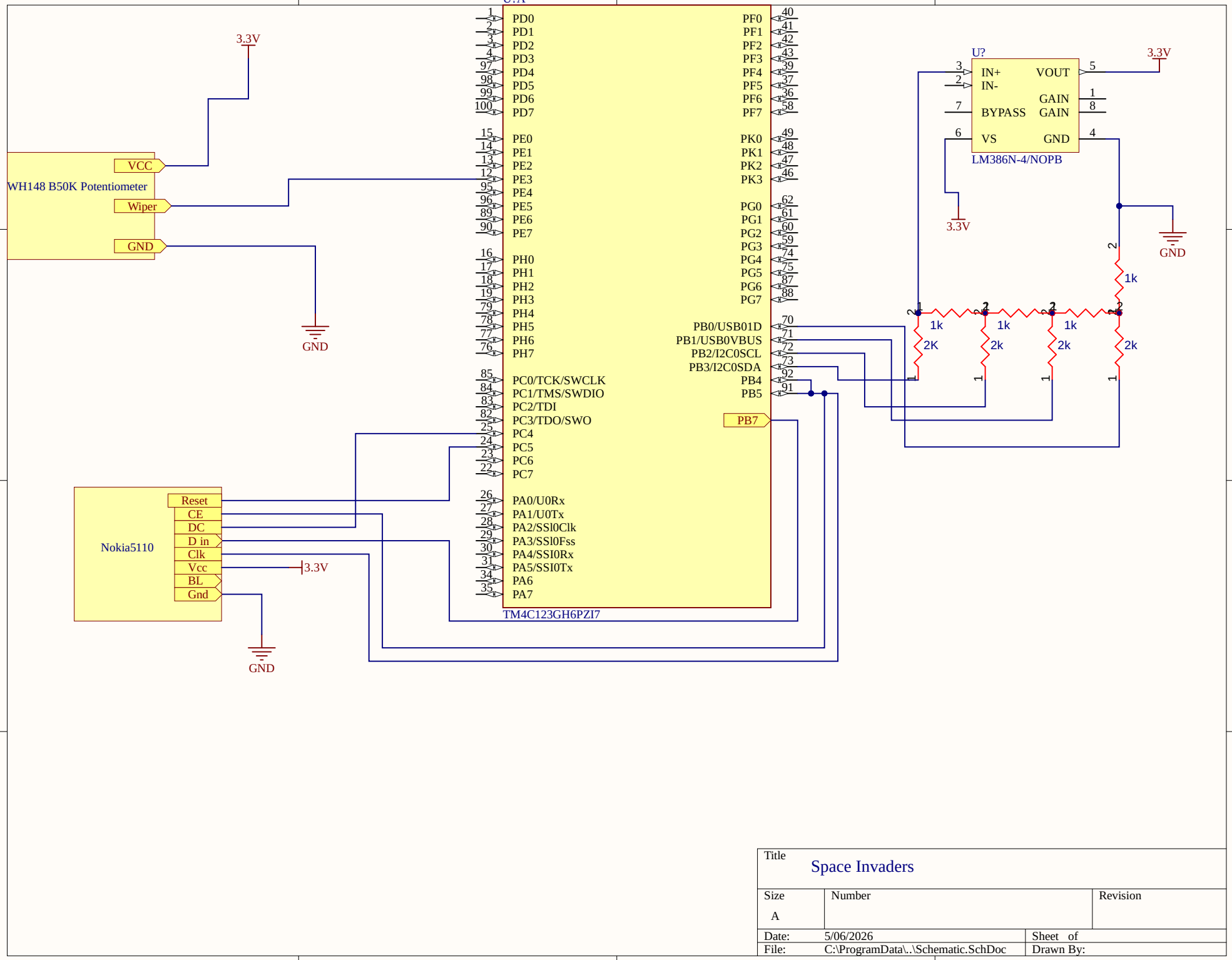

Title		
Space Invaders		
Size: A	Number	Revision
Date: 5/06/2026		Sheet of
File: C:\ProgramData\..\Schematic.SchDoc		Drawn By:

Board Stack Report