Telemetry with Xbee

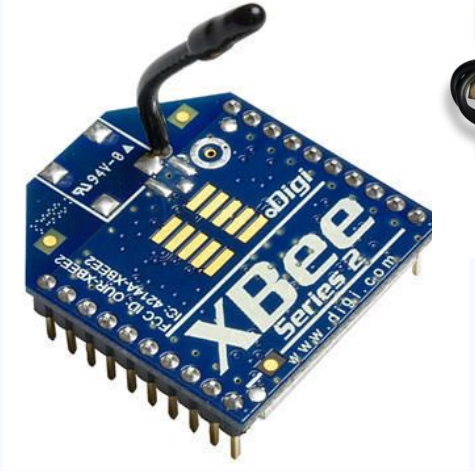

Quick Recap!

- Microcontrollers
  - Arduino nano and uno boards
- Basic arduino programming
- Digital and Analog
- Sensors
  - Barometric Altimeter
  - BMP280

Question Time 😈

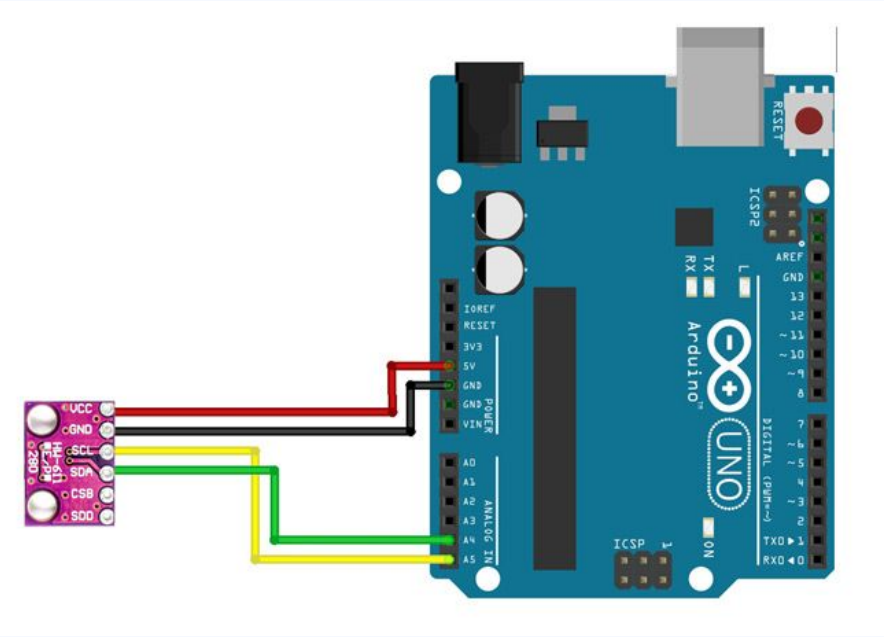

- BMP280 measures pressure and temperature.
- We can calculate altitude from pressure.
- But who is calculating the altitude here?
  - BMP280?
  - Arduino?

WHAT NEXT...

Basic Electronics in our Satellite

Mission

- ➔ Sense/measure weather data
- ➔ Process the data
- ➔ Store it
- ➔ Send it to ground station

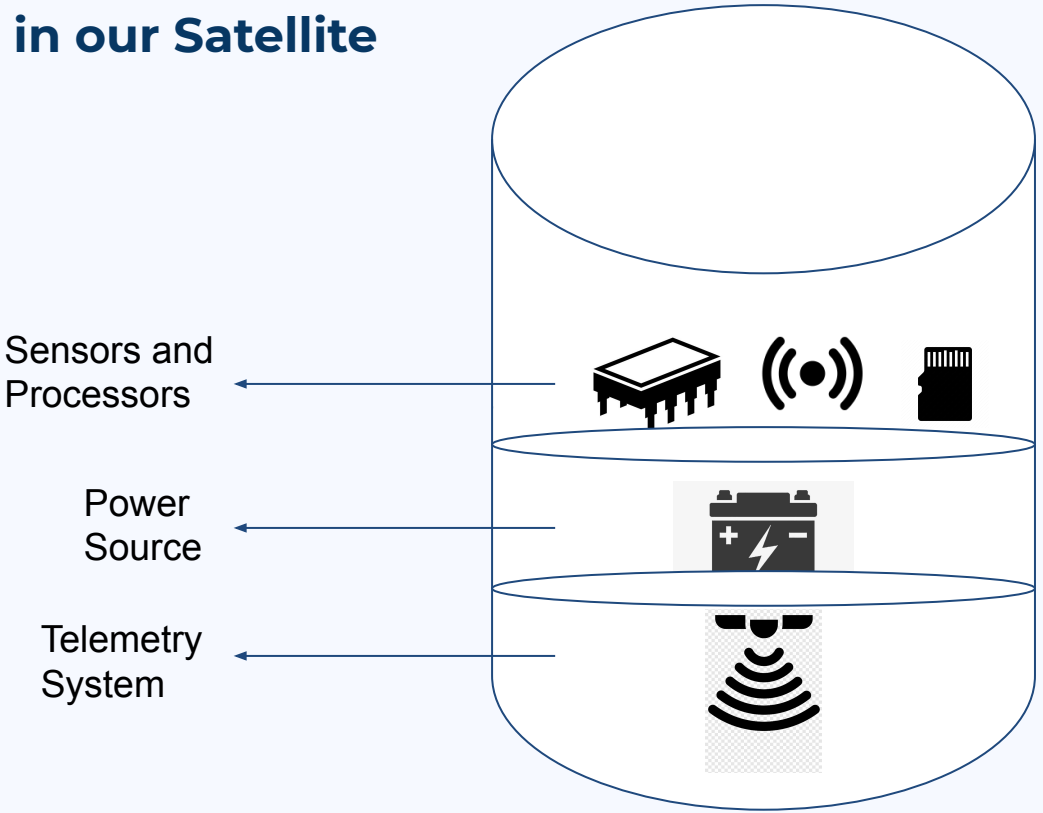

Telemetry System

Satellite

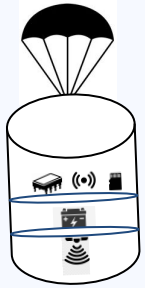

400 m

300 m

Weather Data

100 m

Ground Station

0 m
Ground Level

Components of Telemetry System

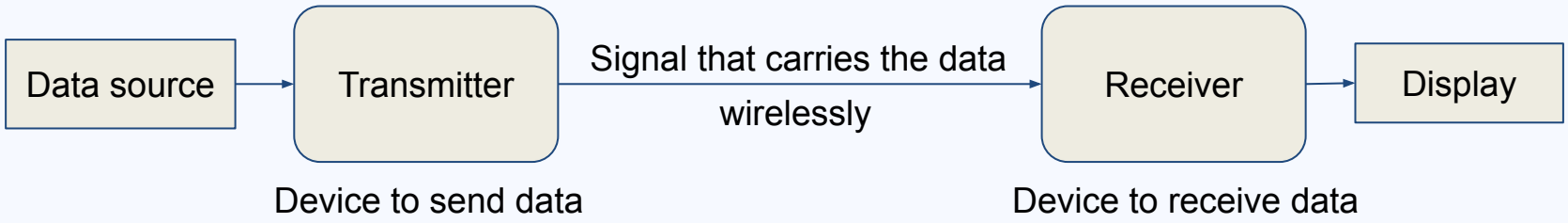

Components of Telemetry System

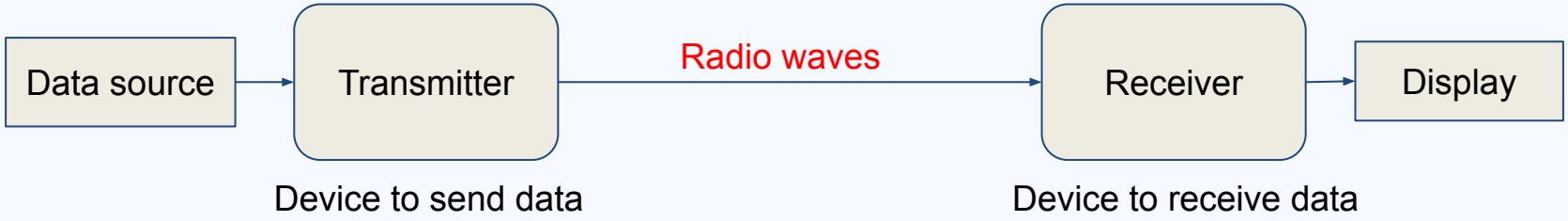

Radio Waves

Day to Day life application of Radio waves:

- Television
- FM radio
- WiFi
- Mobile phone

Radio Waves

Day to Day life application of Radio waves:

- Television
- FM radio
- WiFi
- Mobile phone

Radio Waves

Day to Day life application of Radio waves:

- Television
- FM radio
- WiFi
- Mobile phone

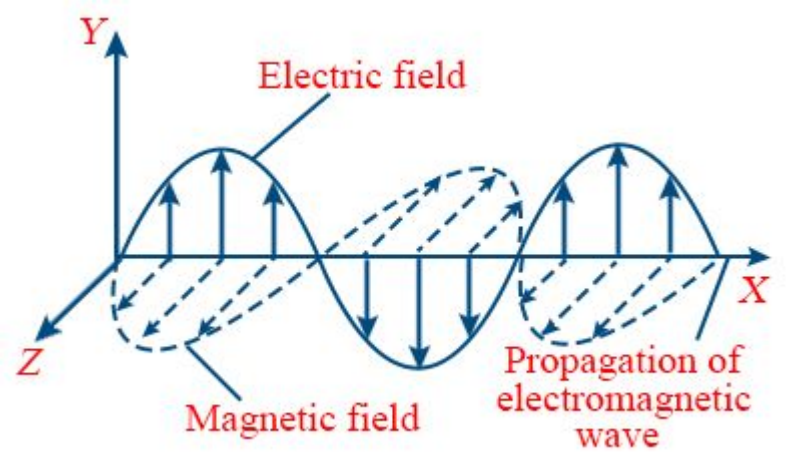

Radio Waves

Day to Day life application of Radio waves:

- Television
- FM radio
- WiFi
- Mobile phone

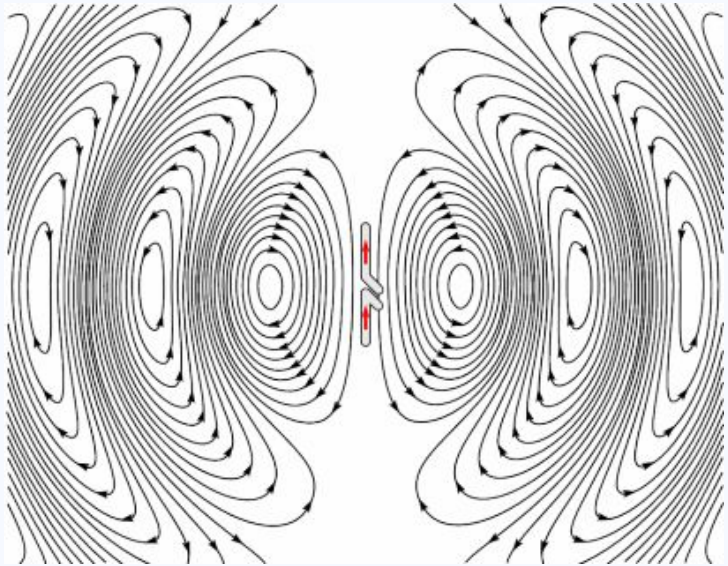

Components of Telemetry System

DIGI®
XBee™

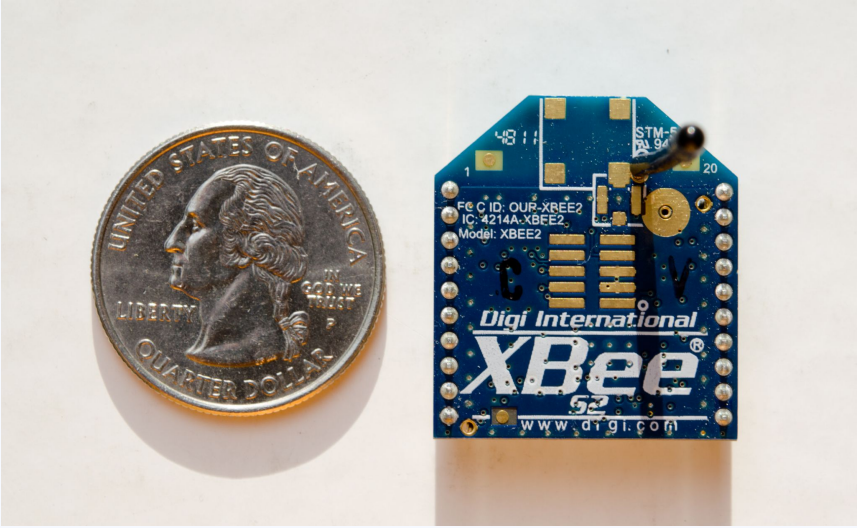

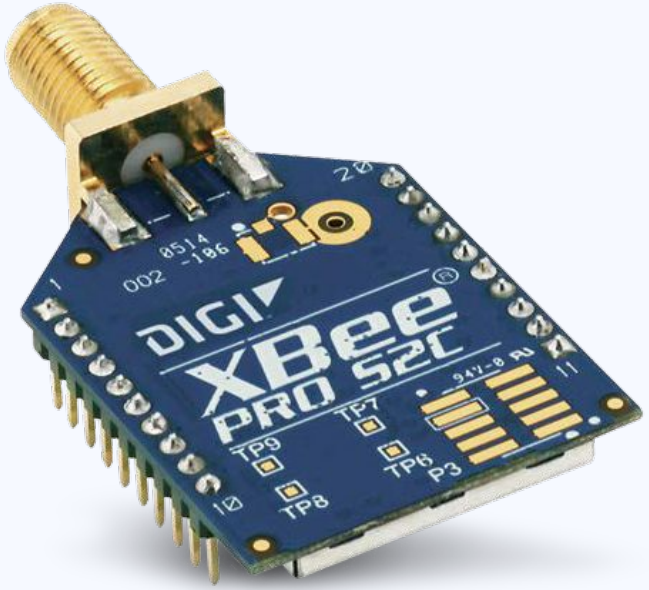

Wireless Communication Devices

XBee with Integrated Wire Antenna | XBee Through-Hole (TH) | XBee Surface Mount (SMT)

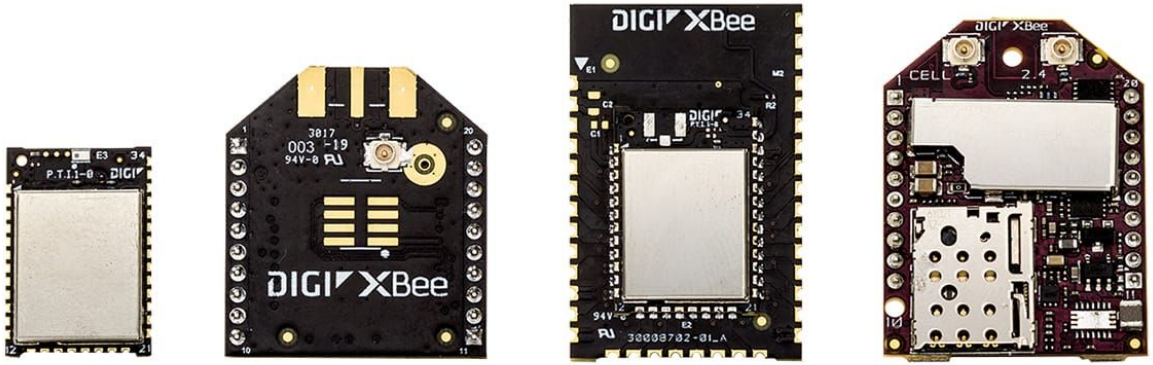

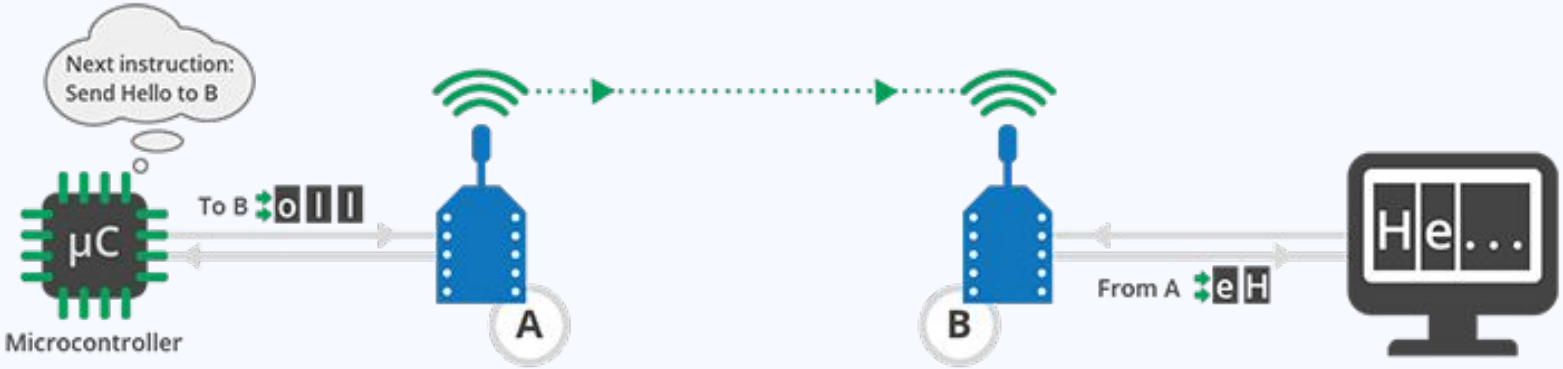
Next instruction:
Send Hello to B
µC
Microcontroller
To B
o l l
A
B
From A
e H
He...

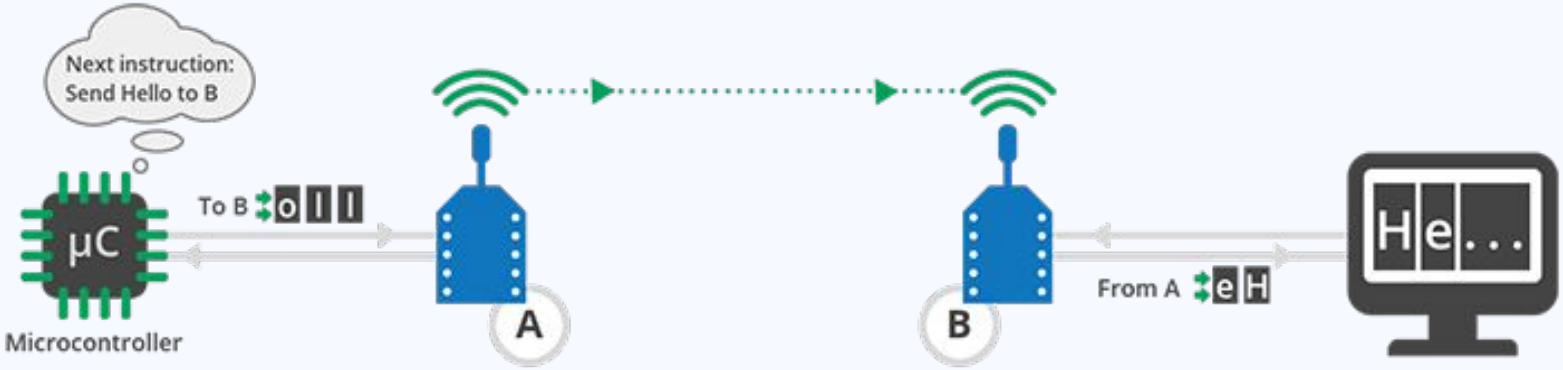
Next instruction:
Send Hello to B
µC
Microcontroller
To B
A
B
From A
He...

delete
XBee

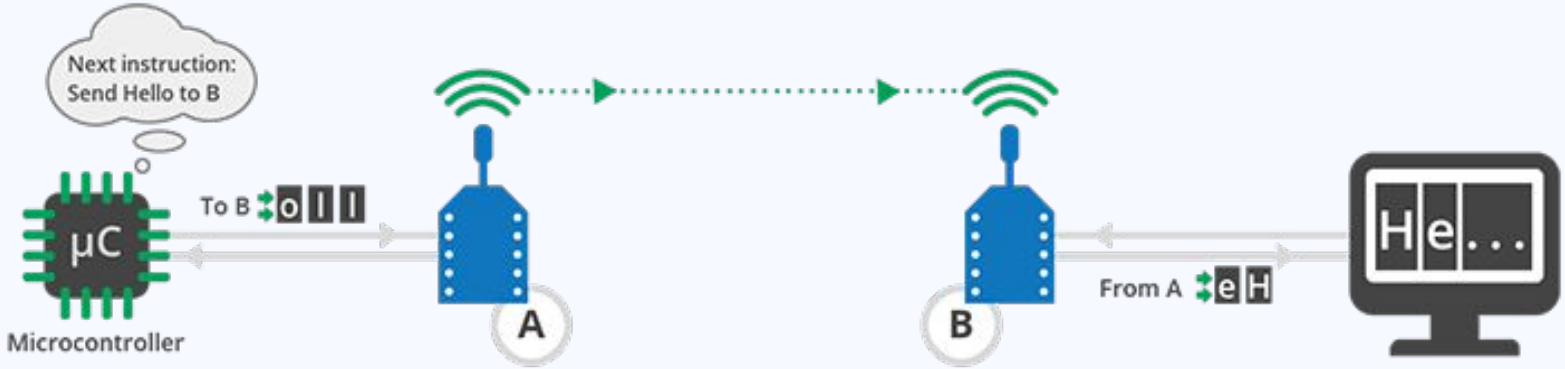

SERIAL COMMUNICATION

Serial Communication

A type of digital communication where data is sent one bit at a time.

Examples: Universal Serial Bus (USB), Serial Peripheral Interface (SPI), Inter-Integrated Circuit (I2C)

Serial Communication

A type of digital communication where data is sent one bit at a time.

Examples: Universal Serial Bus (USB), Serial Peripheral Interface (SPI), Inter-Integrated Circuit (I2C)

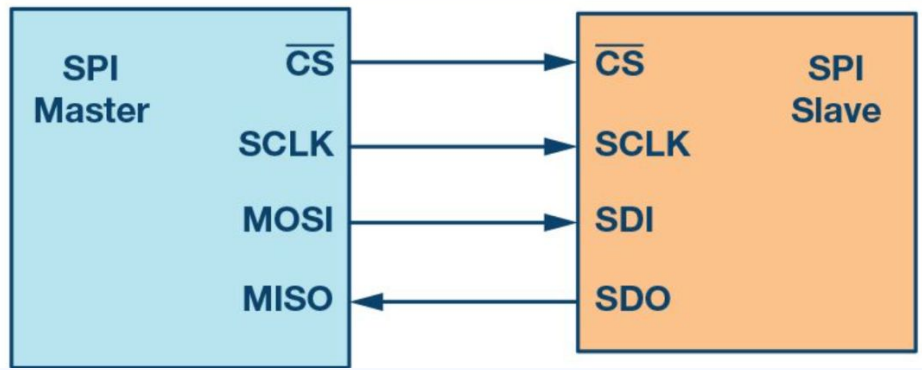

Serial Communication

A type of digital communication where data is sent one bit at a time.

Examples: Universal Serial Bus (USB), Serial Peripheral Interface (SPI), Inter-Integrated Circuit (I2C)

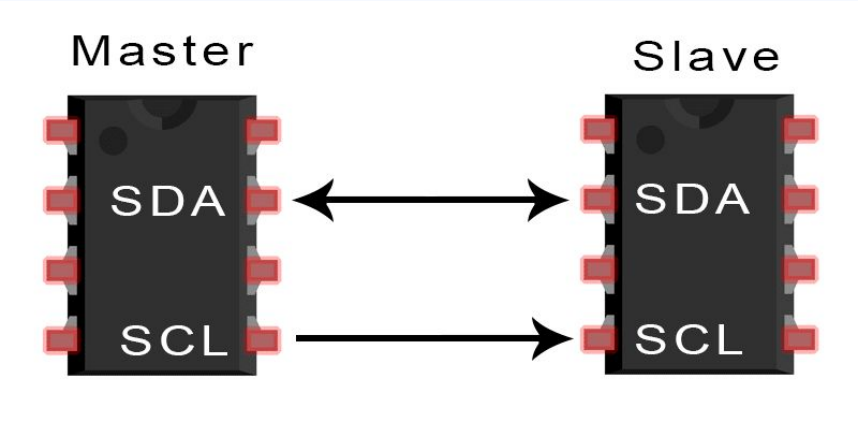

Universal Asynchronous Receiver-Transmitter (UART)

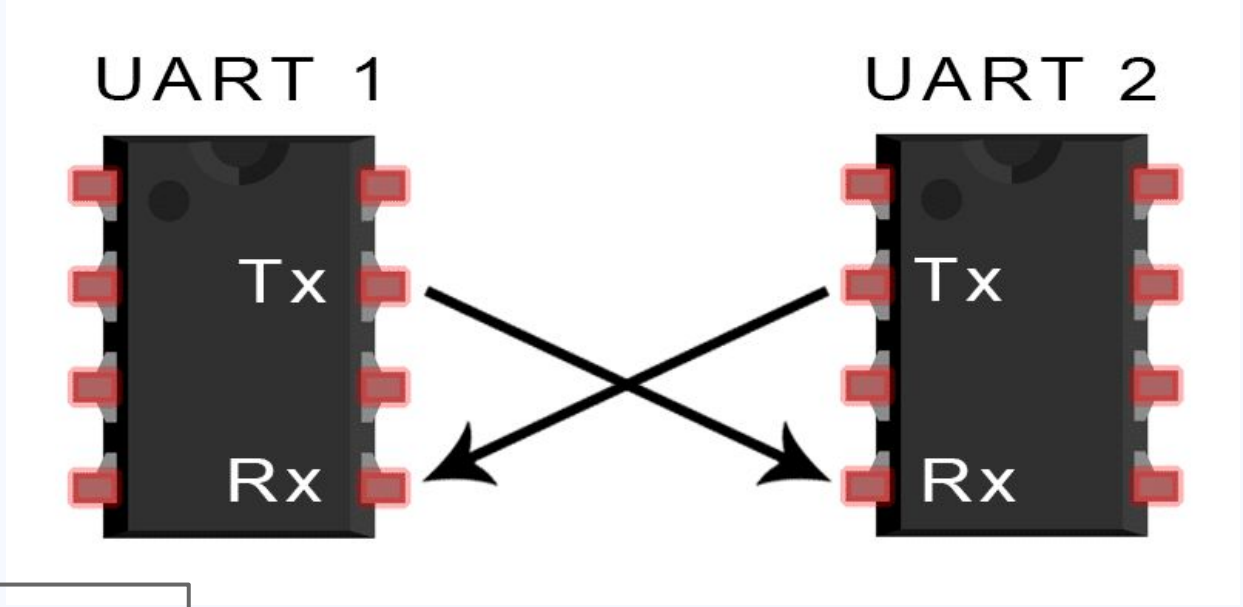

Tx = Transmitter
Rx = Receiver

SPI

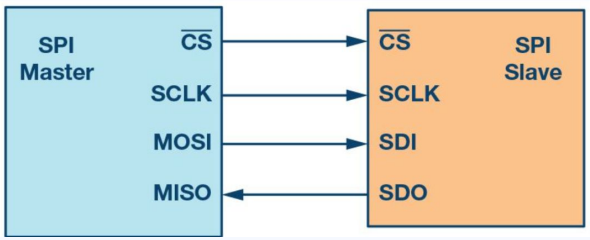
SPI
Master
CS
SCLK
MOSI
MISO
CS
SCLK
SDI
SDO
SPI
Slave

I2C

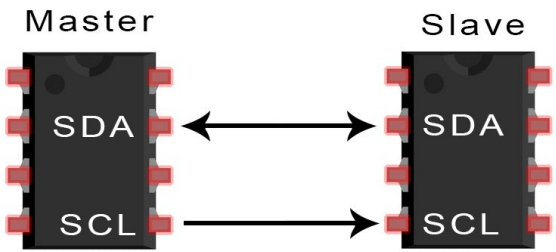
Master
Slave
SDA
SCL
SDA
SCL

UART

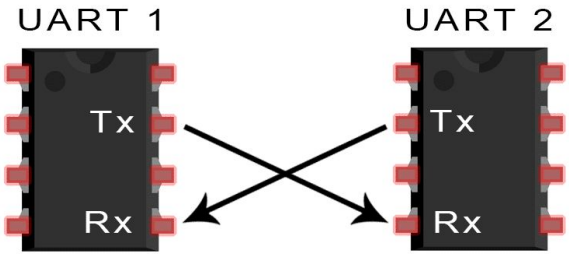
UART 1
UART 2
Tx
Rx
Tx
Rx

Pin Diagram of XBee

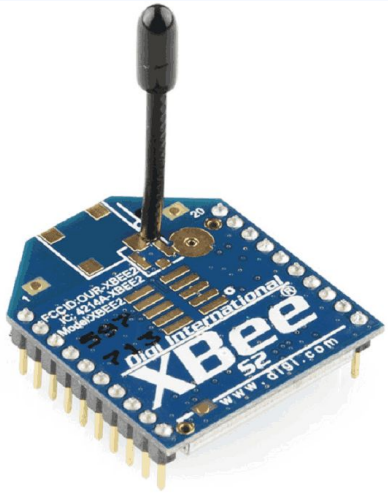

XBee Module

XBee Pin Configuration

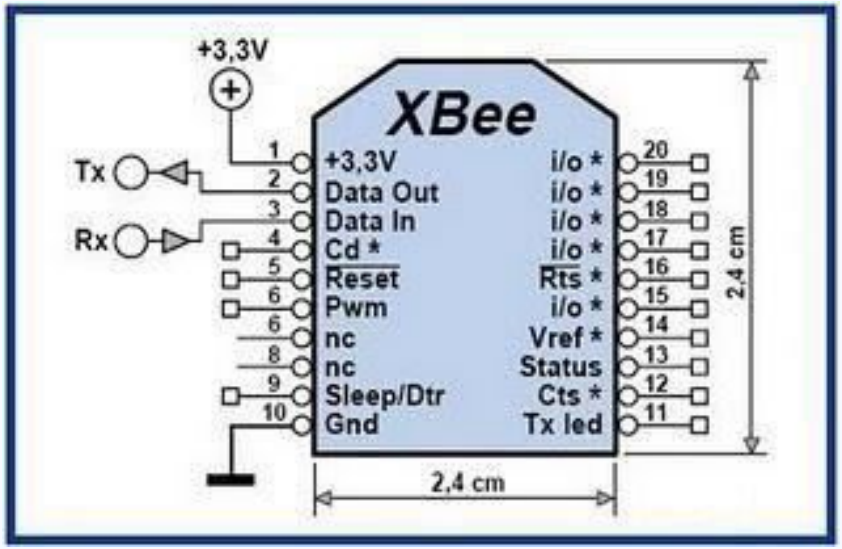

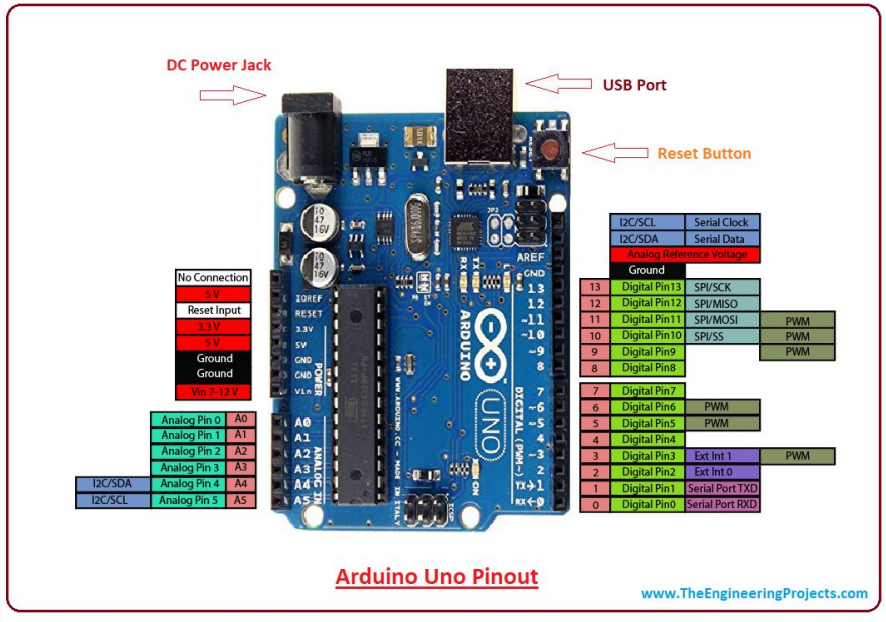
DC Power Jack
USB Port
Reset Button
No Connection
5 V
Reset Input
3.3 V
5 V
Ground
Ground
Vin 7-12 V
Analog Pin 0 A0
Analog Pin 1 A1
Analog Pin 2 A2
Analog Pin 3 A3
I2C/SDA Analog Pin 4 A4
I2C/SCL Analog Pin 5 A5
I2C/SCL Serial Clock
I2C/SDA Serial Data
Analog Reference Voltage
Ground
13 Digital Pin13 SPI/SCK
12 Digital Pin12 SPI/MISO
11 Digital Pin11 SPI/MOSI PWM
10 Digital Pin10 SPI/SS PWM
9 Digital Pin9 PWM
8 Digital Pin8
7 Digital Pin7
6 Digital Pin6 PWM
5 Digital Pin5 PWM
4 Digital Pin4
3 Digital Pin3 Ext Int 1 PWM
2 Digital Pin2 Ext Int 0
1 Digital Pin1 Serial Port TXD
0 Digital Pin0 Serial Port RXD
Arduino Uno Pinout
www.TheEngineeringProjects.com

UNO
DIGITAL PWM~
POWER
ANALOG IN
ICSP

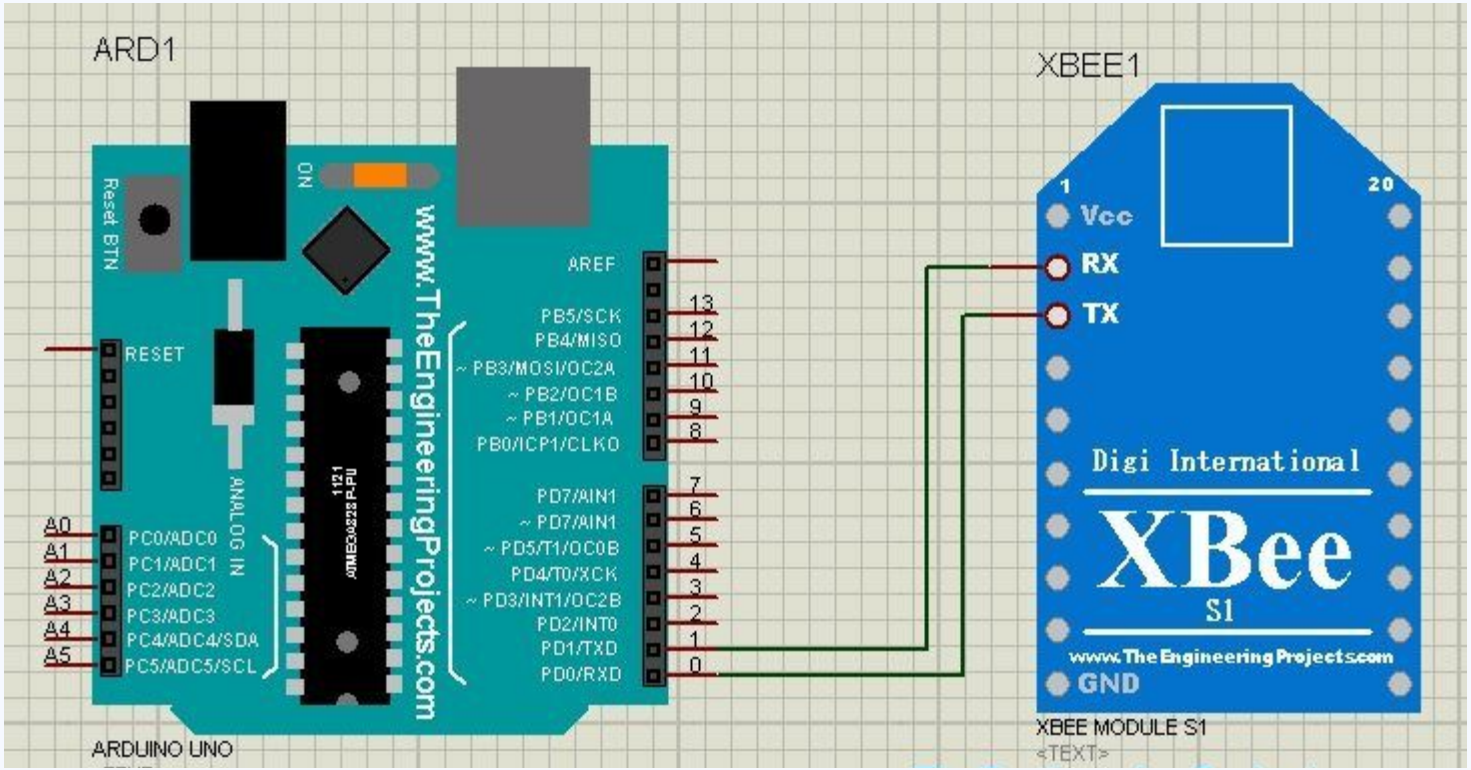
ARD1
XBEE1
Reset BTN
ON
RESET
ANALOG IN
A0
A1
A2
A3
A4
A5
PC0/ADC0
PC1/ADC1
PC2/ADC2
PC3/ADC3
PC4/ADC4/SDA
PC5/ADC5/SCL
www.TheEngineeringProjects.com
AREF
PB5/SCK
PB4/MISO
~ PB3/MOSI/OC2A
~ PB2/OC1B
~ PB1/OC1A
PB0/ICP1/CLKO
PD7/AIN1
~ PD7/AIN1
~ PD5/T1/OC0B
PD4/T0/XCK
~ PD3/INT1/OC2B
PD2/INT0
PD1/TXD
PD0/RXD
13
12
11
10
9
8
7
6
5
4
3
2
1
0
1
20
Vcc
RX
TX
Digi International
XBee
S1
www.TheEngineeringProjects.com
GND
ARDUINO UNO
XBEE MODULE S1
<TEXT>

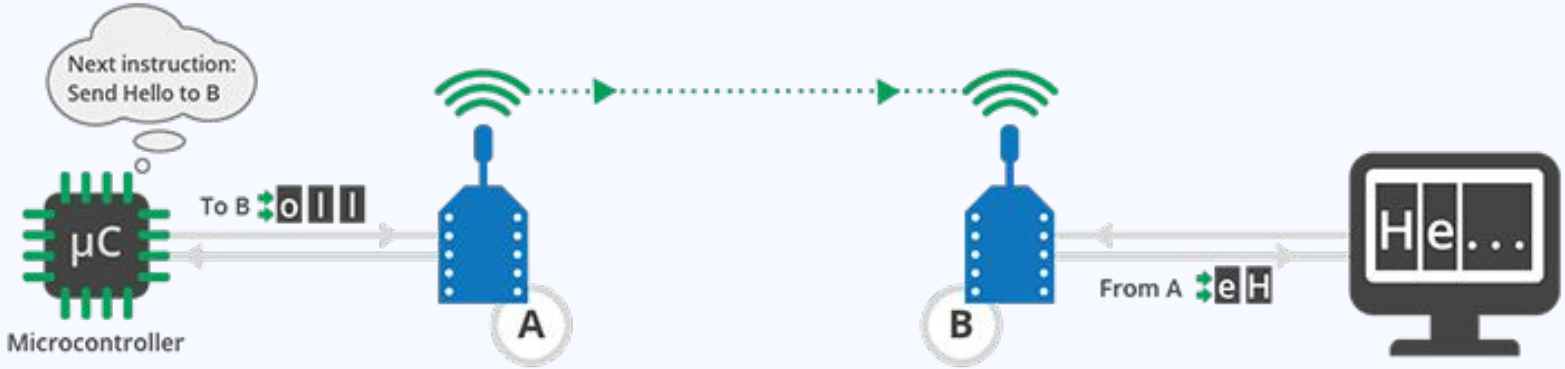

SERIAL COMMUNICATION

Configuring XBee using XCTU

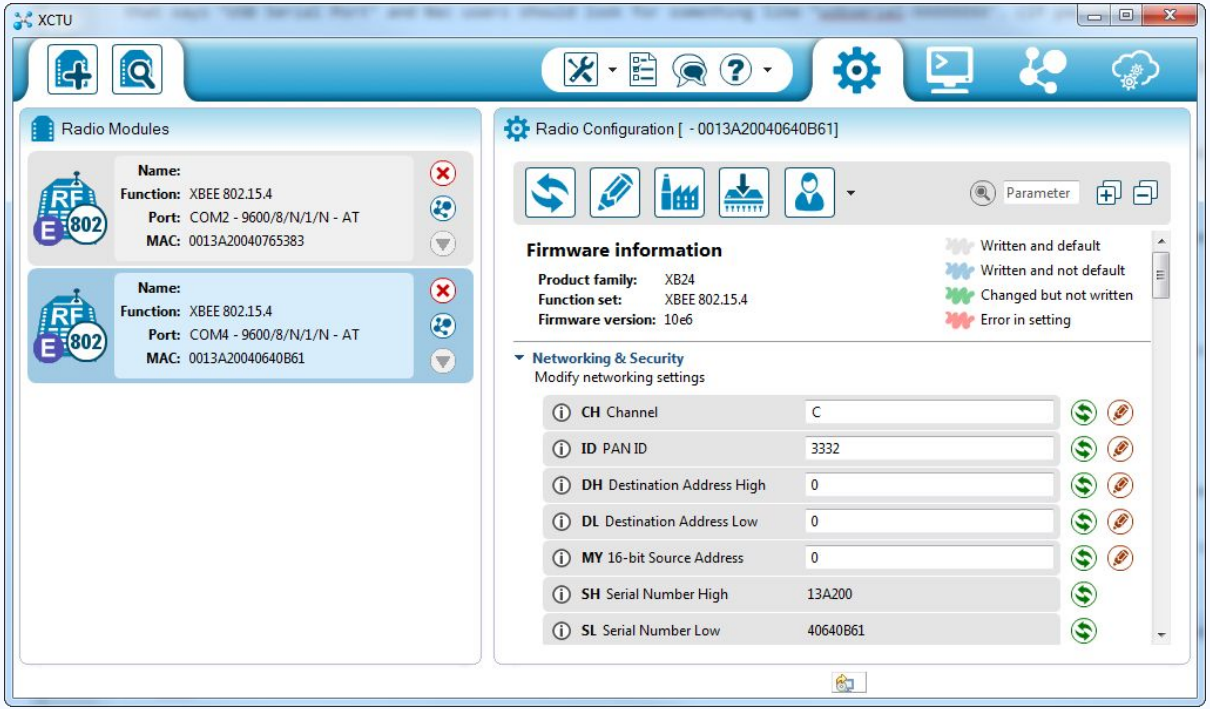

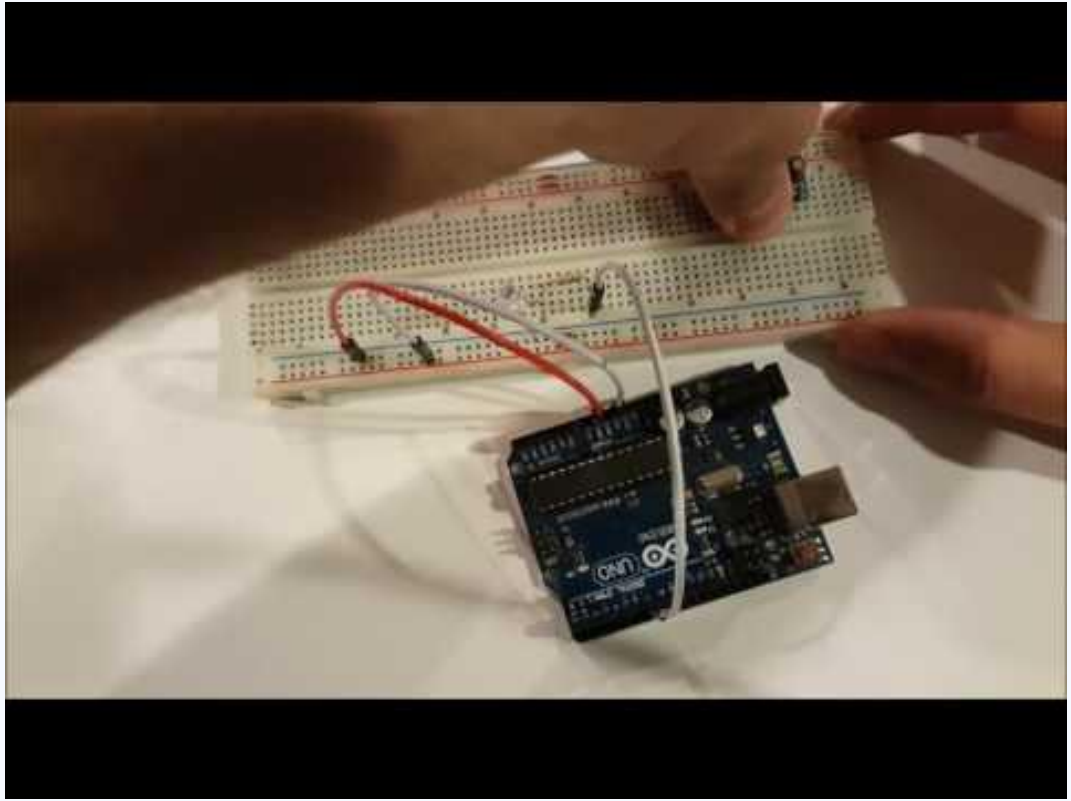

THANK YOU