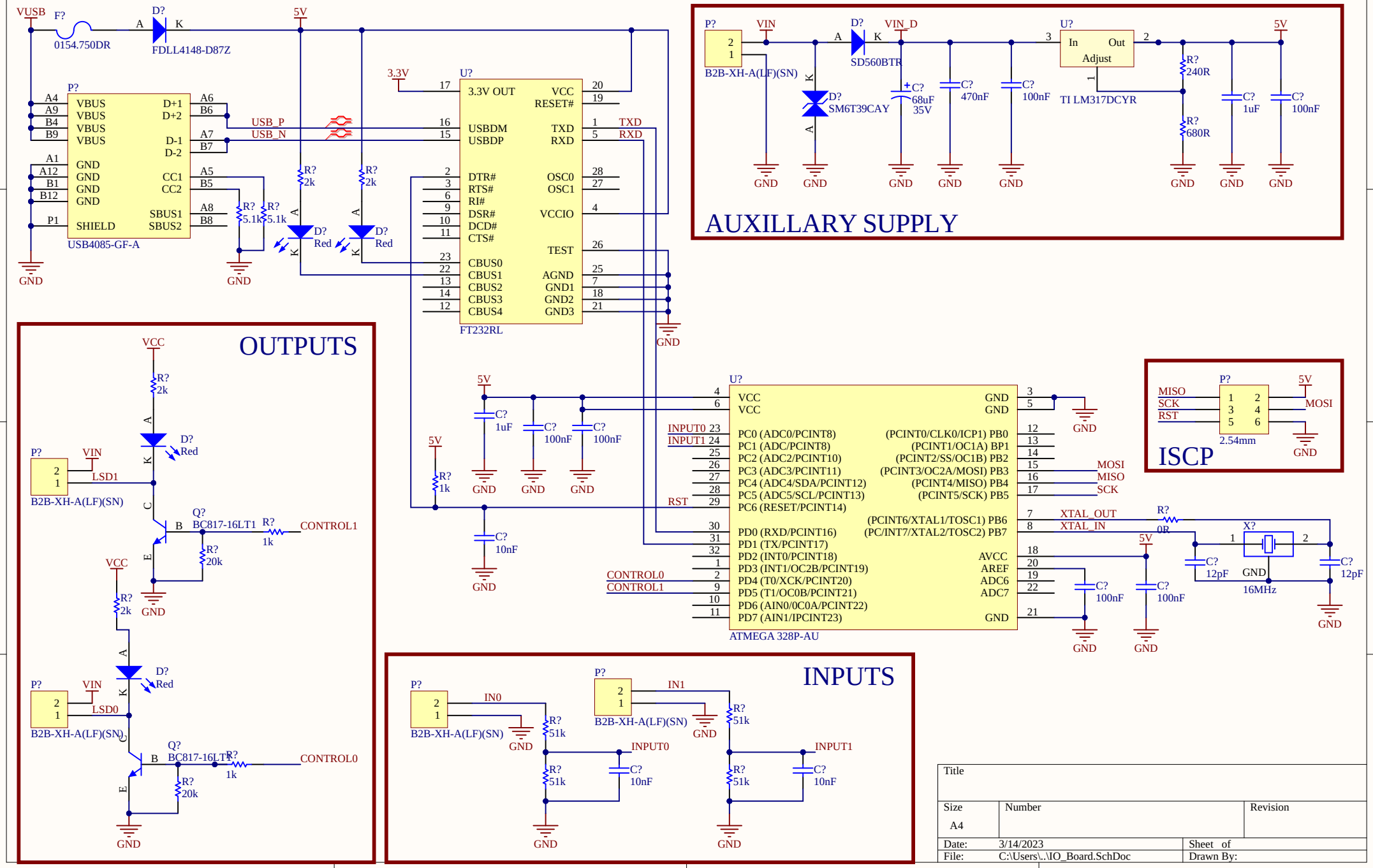

Title		
Size A4	Number	Revision
Date: 3/14/2023		Sheet of
File: C:\Users\..\IO_Board.SchDoc		Drawn By: