PART	BOSTON GEAR NB54
OPERATION 1	BORE GEAR TO1.00"
OPEARTION 2	BROACH GEAR FOR 0.25" SQUARE KEYWAY

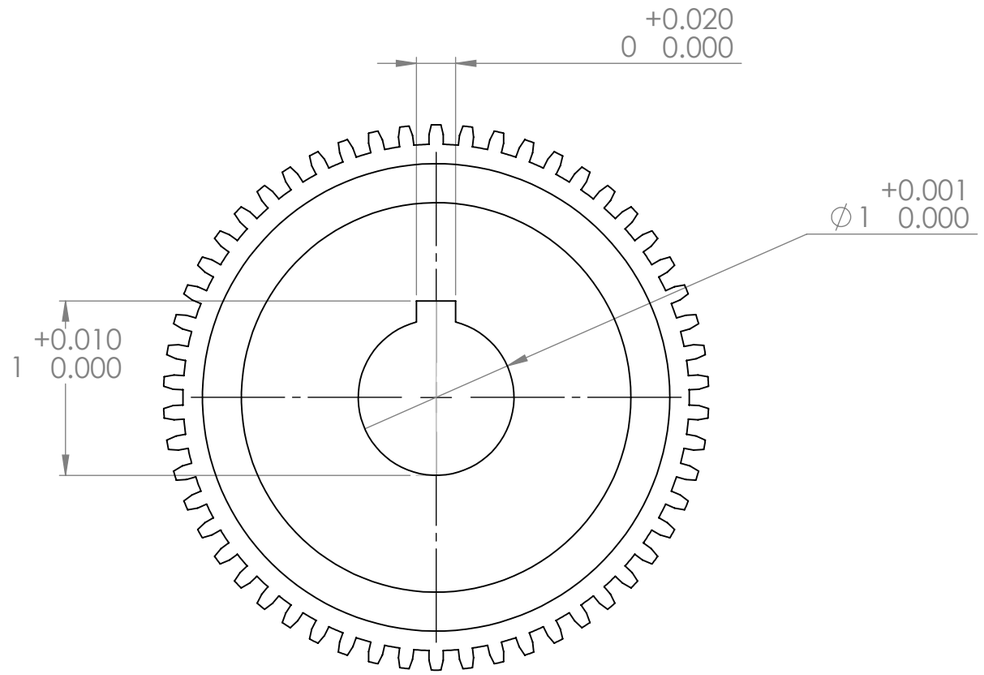

ALL UNSPECIFIED DIMENSIONS MUST BE SOURCED
FROM PART FILE FROM BOST GEAR

UNLESS OTHERWISE SPECIFIED: DIMENSIONS ARE IN INCHES SURFACE FINISH: TOLERANCES: LINEAR: ±0.005" ANGULAR:	FINISH: AS MACHINED				DEBUR AND BREAK SHARP EDGES	DO NOT SCALE DRAWING / REVISION A
	NAME	SIGNATURE	DATE			TITLE: GEAR MODIFICATION
DRAWN	JLF		10/2/2014			
CHK'D						
APPV'D						
MFG						
Q.A				MATERIAL: 1045 STEEL		DWG NO. NB54 Input gear / A3
				WEIGHT:		SCALE:1:1 / SHEET 1 OF 1