REVISIONS				
ZONE	REV.	DESCRIPTION	DATE	APPROVED
			MM/DD/YYYY	-

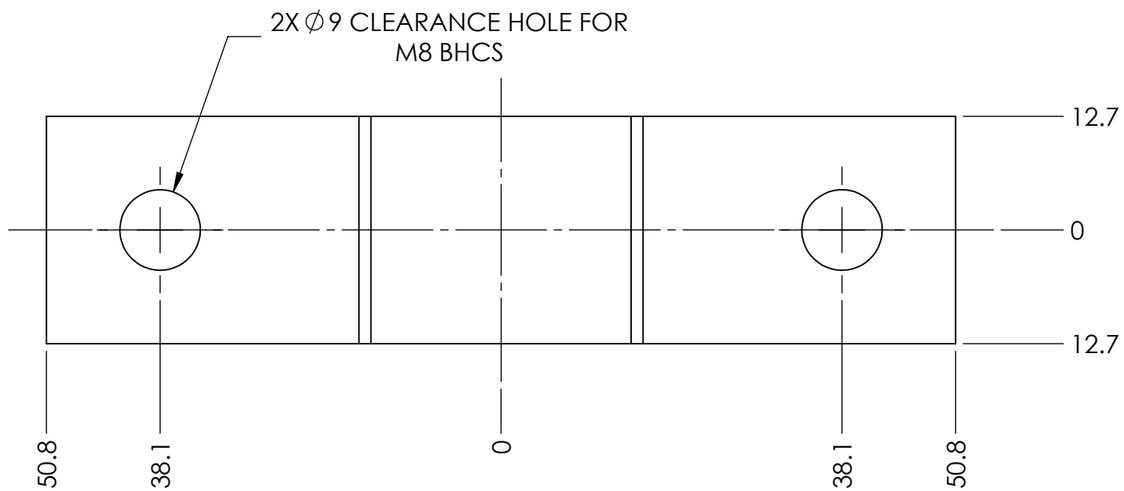

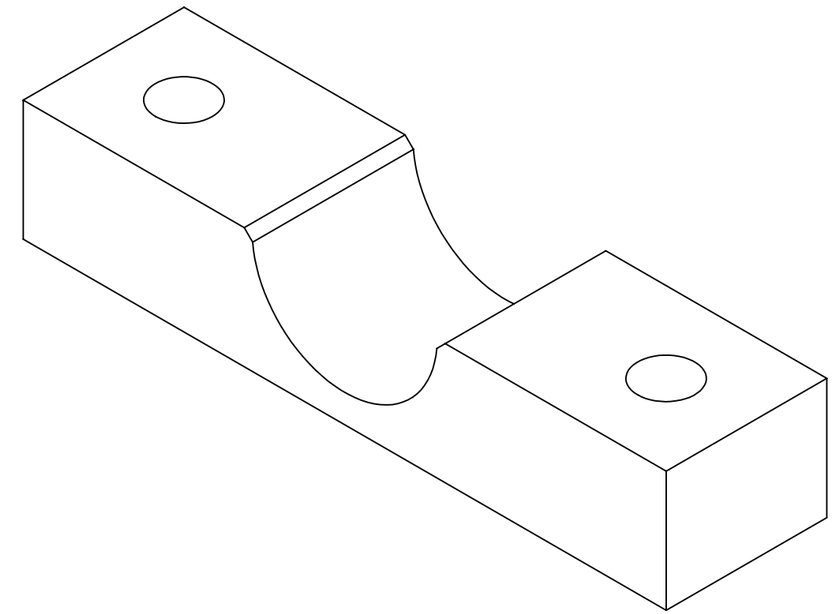

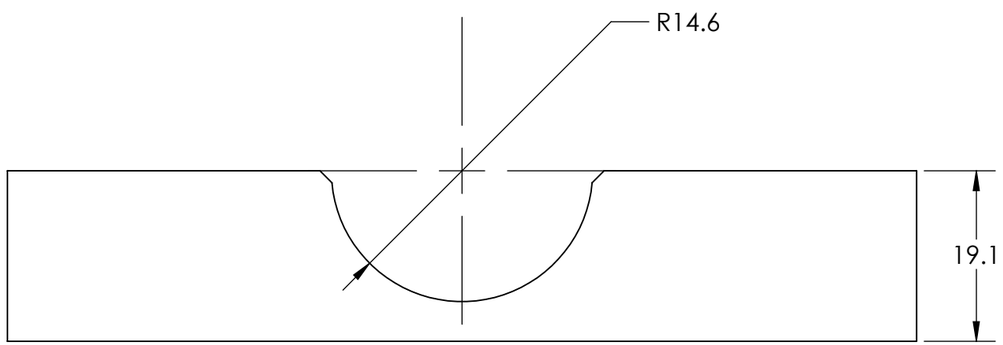

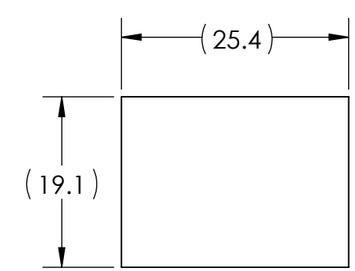

1. FOUR (4) PIECES REQUIRED
2. BREAK ALL EDGES
3. MATERIAL: STAINLESS STEEL

PART NO:	QUANTITY:	MATERIAL:	REV:	
XXX-XXX				SHEET 1 OF 1