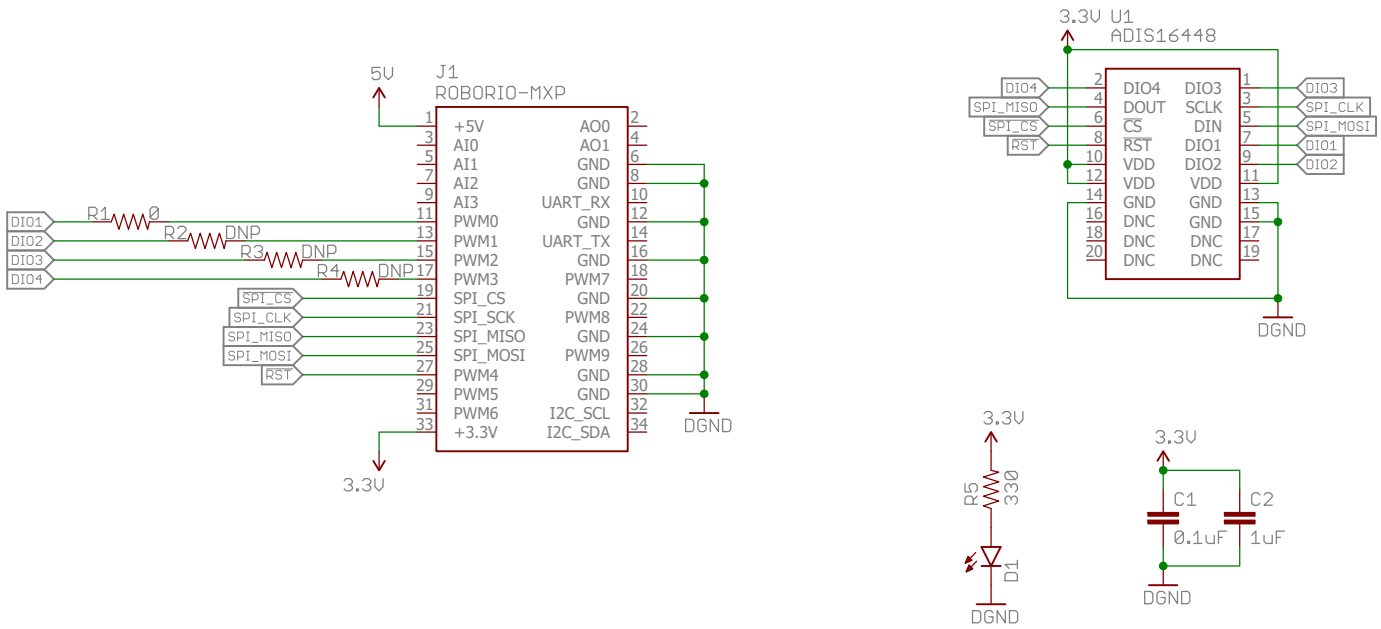

ADIS16448 MXP Breakout Board

TITLE: ADIS16448_MXP_Breakout_RevC

Document Number:

Juan Jose Chong

REV: C

Date: 10/3/2015 1:23 AM

Sheet: 1/1