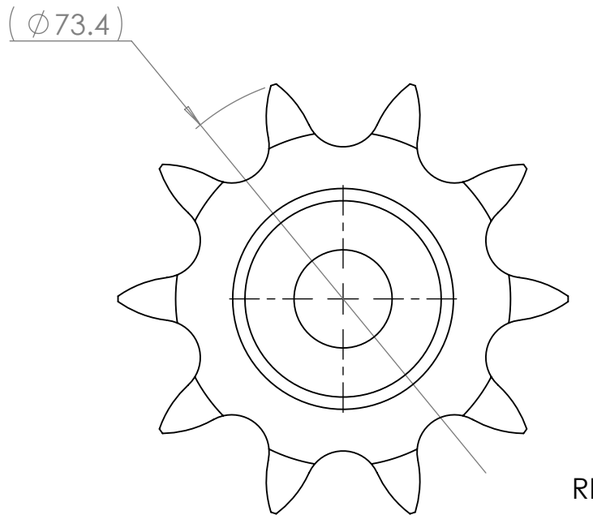

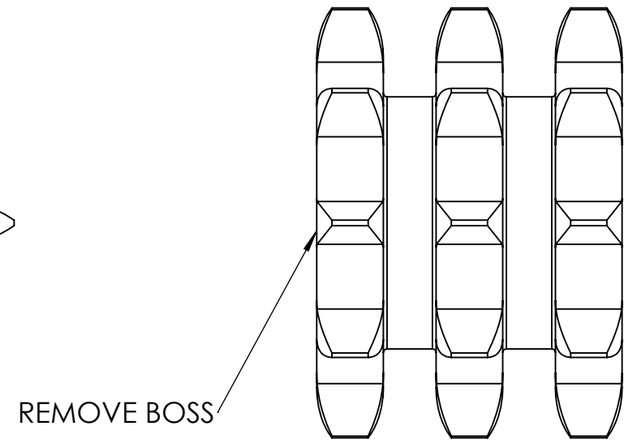

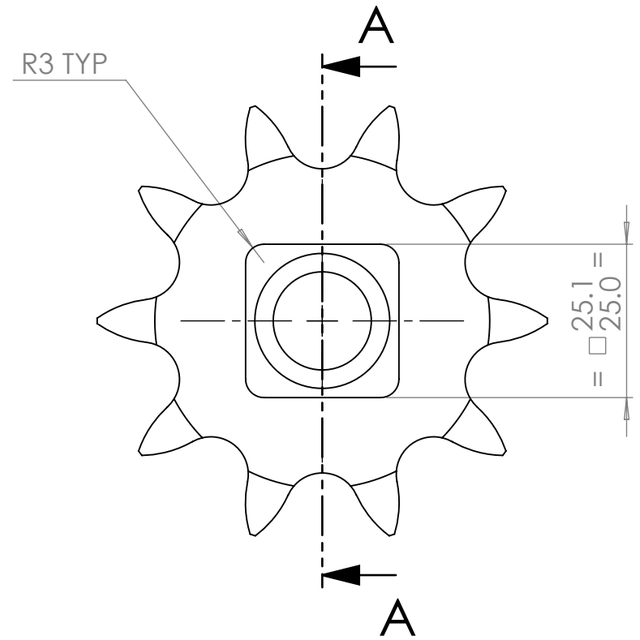

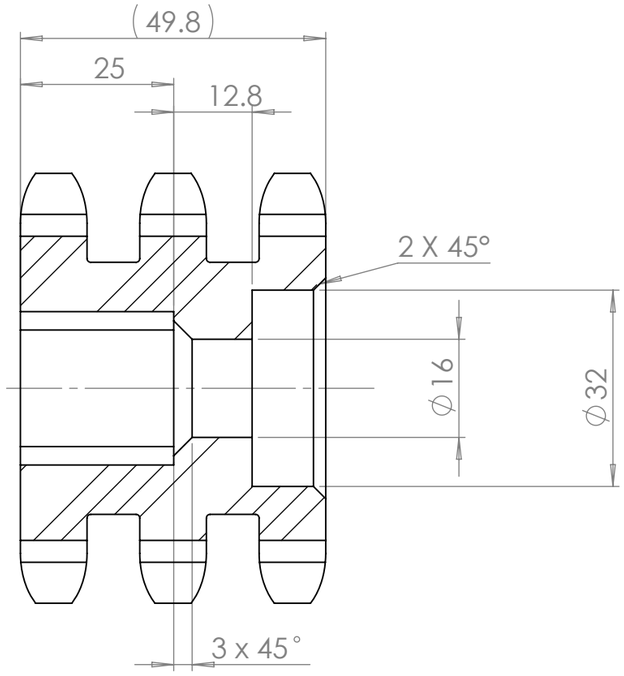

SECTION A-A

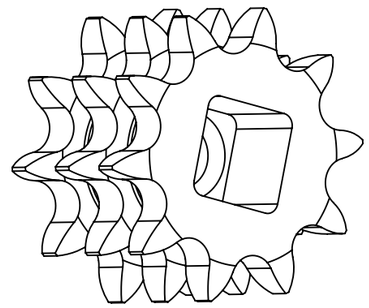

FROM FREE ISSUE 10 TOOTH 12B-3 PILOT BORE SPROCKET

UNLESS OTHERWISE SPECIFIED: DIMENSIONS ARE IN MILLIMETERS SURFACE FINISH: TOLERANCES: LINEAR:+/-0.2 ANGULAR:	FINISH:			DEBURR AND BREAK SHARP EDGES	DO NOT SCALE DRAWING	REVISION
	NAME	SIGNATURE	DATE		TITLE:	
DRAWN						
CHK'D						
APPV'D						
MFG						
Q.A				MATERIAL: 1.0503 (C45)	DWG NO. 12B3 10T	A3
				WEIGHT:	SCALE:1:1	SHEET 1 OF 1