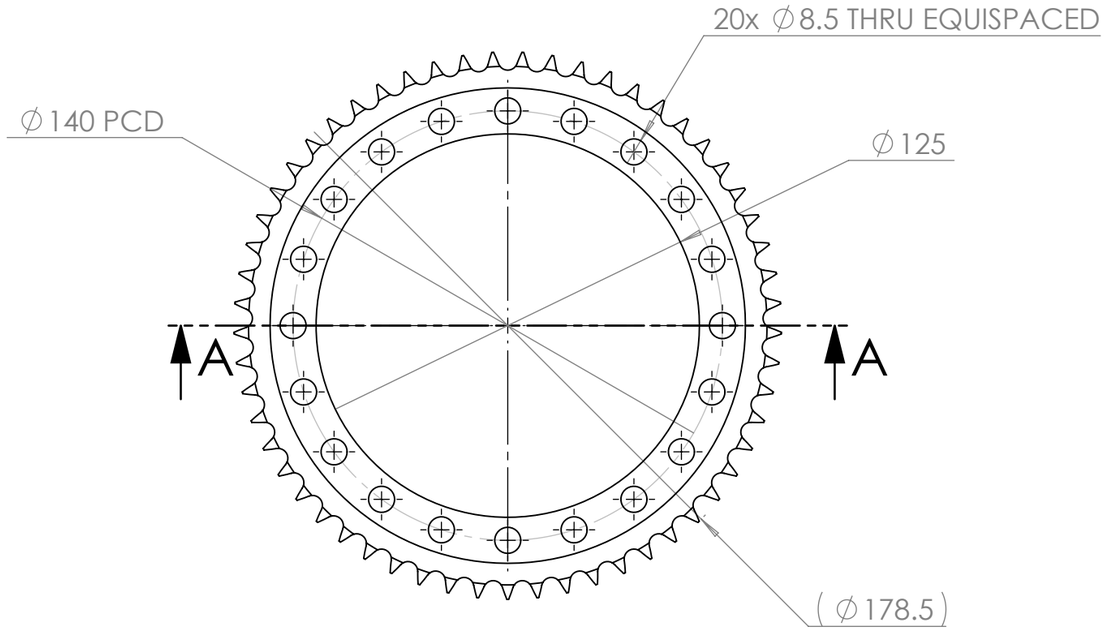

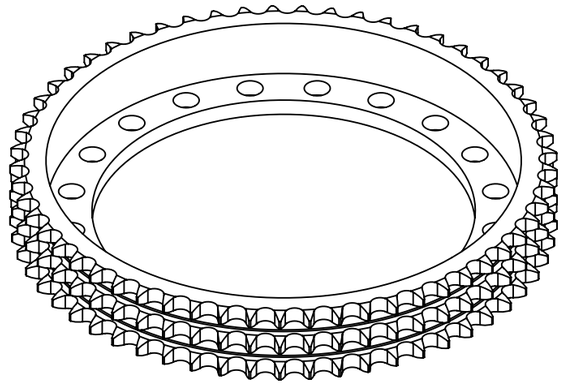

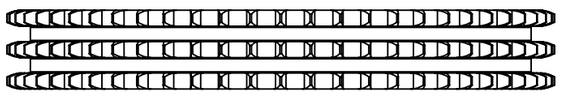

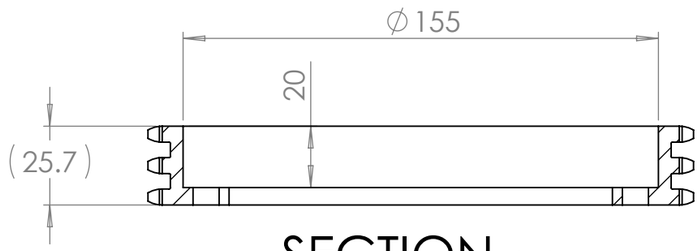

SECTION A-A

FROM FREE ISSUE 57 TOOTH 06B-3 PILOT BORE SPROCKET

UNLESS OTHERWISE SPECIFIED: DIMENSIONS ARE IN MILLIMETERS SURFACE FINISH: TOLERANCES: LINEAR: +/-0.2 ANGULAR:	FINISH:	DEBURR AND BREAK SHARP EDGES	DO NOT SCALE DRAWING / REVISION

	NAME	SIGNATURE	DATE
DRAWN			
CHK'D			
APPV'D			
MFG			
Q.A			

TITLE:

MATERIAL: 1.0503 (C45)

WEIGHT:

DWG NO. 57T 06b3 v0.2

A3

SCALE:1:2

SHEET 1 OF 1