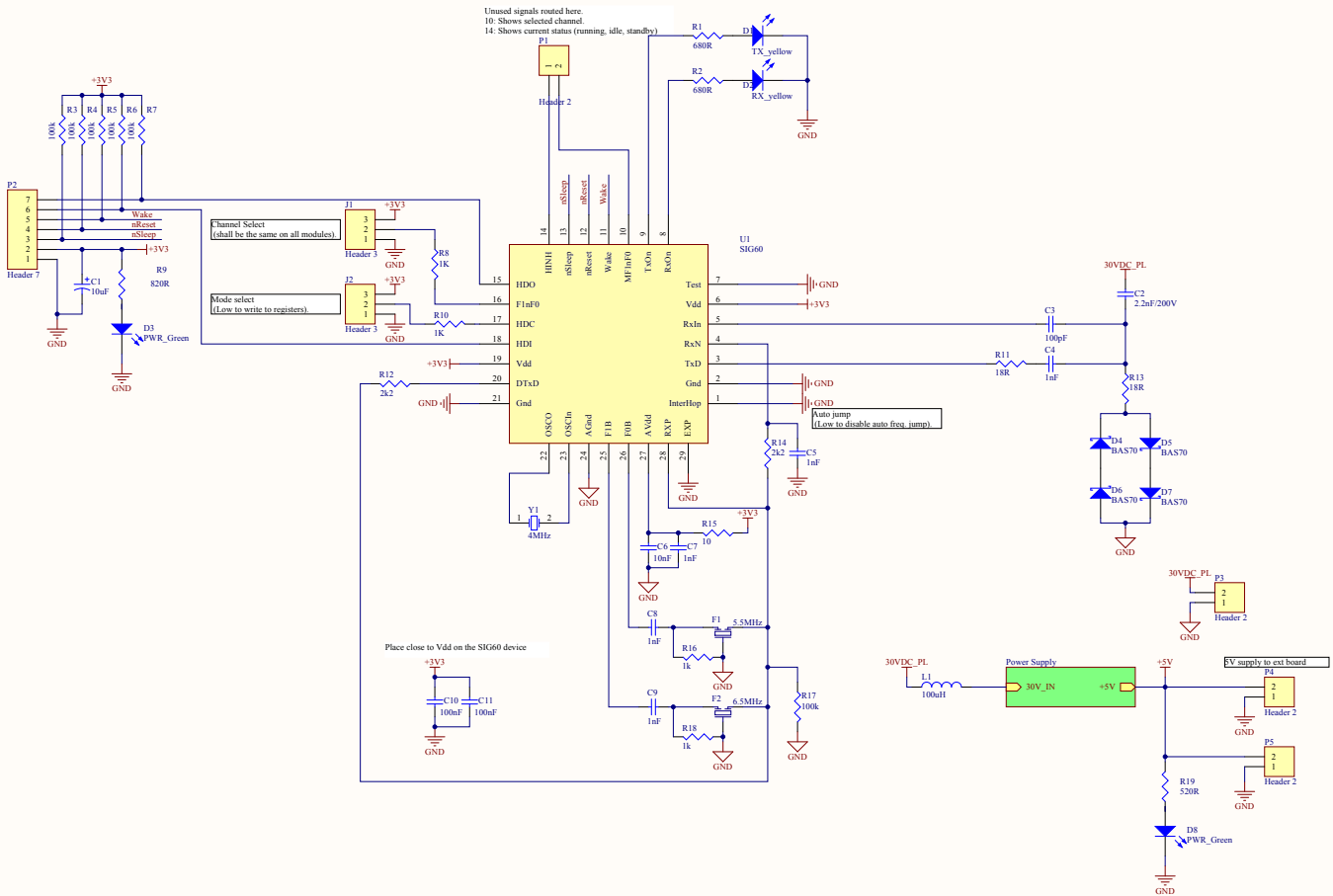
Unused signals routed here.
10: Shows selected channel.
14: Shows current status (running, idle, standby)
P1
Header 2
R1
680R
D1
TX_yellow
R2
680R
D2
RX_yellow
GND
+3V3
R3
100k
R4
100k
R5
100k
R6
100k
R7
100k
P2
Header 7
Wake
nReset
nSleep
C1
10uF
R9
820R
D3
PWR_Green
Channel Select
(shall be the same on all modules).
J1
Header 3
R8
1K
Mode select
(Low to write to registers).
J2
Header 3
R10
1K
R12
2k2
U1
SIG60
HDO
F1nF0
HDC
HDI
Vdd
DTxD
Gnd
HIH1
nSleep
nReset
Wake
MFinF0
TxOn
RxOn
Test
Vdd
RxIn
RxN
TxD
Gnd
InterHop
OSCO
OSCIn
AGnd
F1B
F0B
AVdd
RXP
EXP
Auto jump
(Low to disable auto freq. jump).
Y1
4MHz
R14
2k2
C5
1nF
R15
10
C6
10nF
C7
1nF
C8
1nF
F1
5.5MHz
R16
1k
C9
1nF
F2
6.5MHz
R18
1k
R17
100k
Place close to Vdd on the SIG60 device
C10
100nF
C11
100nF
30VDC_PL
C2
2.2nF/200V
C3
100pF
C4
1nF
R11
18R
R13
18R
D4
BAS70
D5
BAS70
D6
BAS70
D7
BAS70
P3
Header 2
L1
100uH
Power Supply
30V_IN
+5V
5V supply to ext board
P4
Header 2
P5
Header 2
R19
520R
D8
PWR_Green

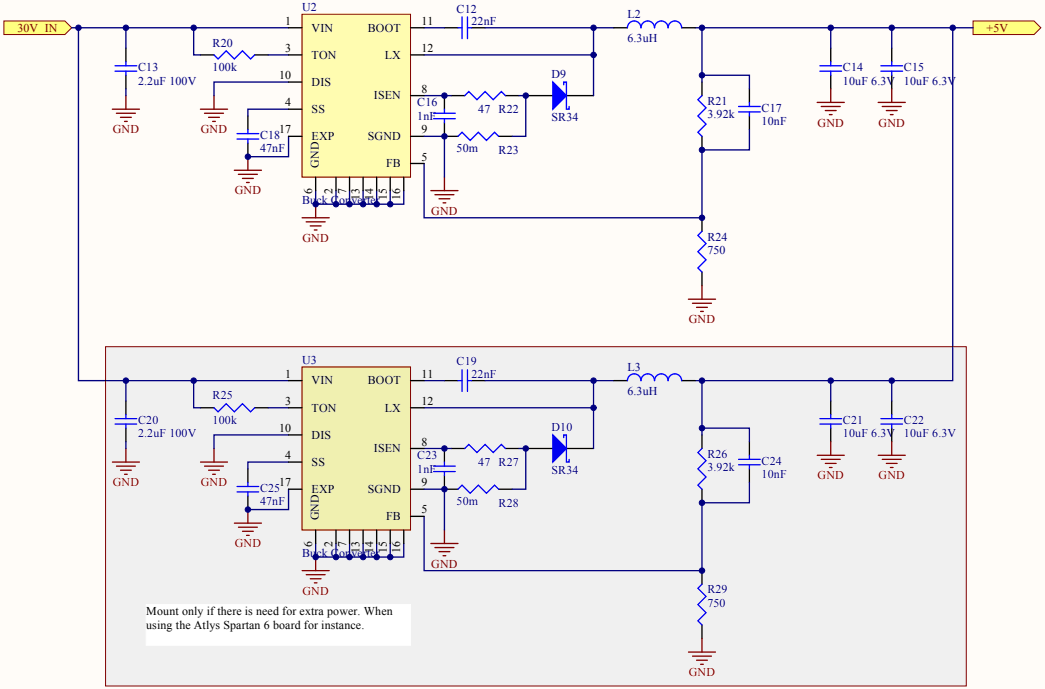
30V_IN
+5V
U2
VIN
TON
DIS
SS
EXP
GND
BOOT
LX
ISEN
SGND
FB
Buck Converter
C12
22nF
L2
6.3uH
C13
2.2uF 100V
R20
100k
C18
47nF
C16
1nF
47
R22
D9
SR34
50m
R23
R21
3.92k
C17
10nF
C14
10uF 6.3V
C15
10uF 6.3V
R24
750
U3
C19
22nF
L3
6.3uH
C20
2.2uF 100V
R25
100k
C25
47nF
C23
1nF
47
R27
D10
SR34
50m
R28
R26
3.92k
C24
10nF
C21
10uF 6.3V
C22
10uF 6.3V
R29
750
Mount only if there is need for extra power. When using the Atlys Spartan 6 board for instance.

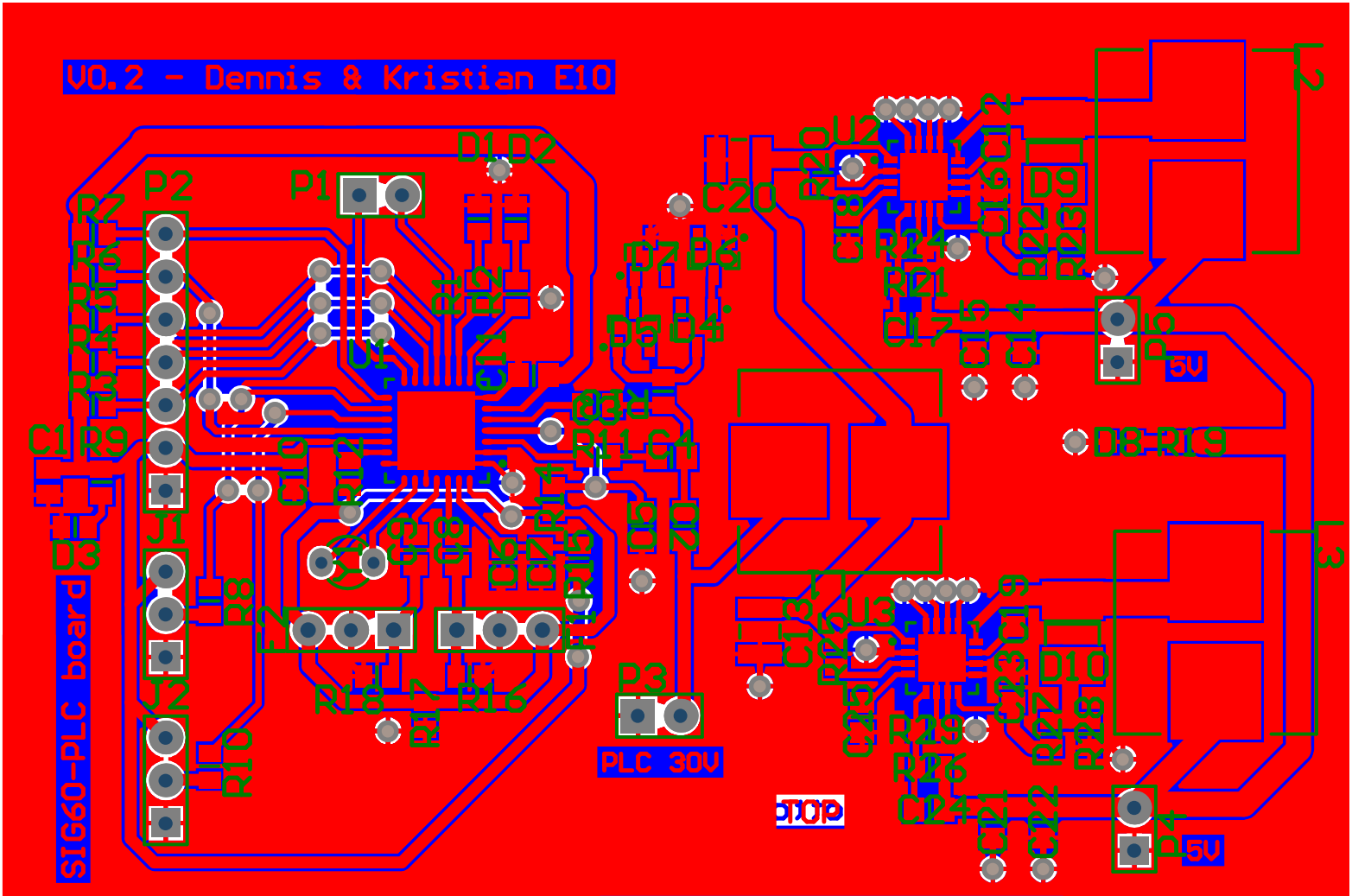
V0.2 - Dennis & Kristian E10
SIG60-PLC board
PLC 30V
5V
5V
STOP