US012398540B2

(12) **United States Patent**
Valerio

(10) **Patent No.: US 12,398,540 B2**
(45) **Date of Patent: Aug. 26, 2025**

(54) **MONITORING SYSTEM FOR WORK MACHINE**

(71) Applicant: **Caterpillar Inc.**, Peoria, IL (US)

(72) Inventor: **Micheal David Valerio**, Morton, IL (US)

(73) Assignee: **Caterpillar Inc.**, Peoria, IL (US)

(*) Notice: Subject to any disclaimer, the term of this patent is extended or adjusted under 35 U.S.C. 154(b) by 85 days.

(21) Appl. No.: **17/819,478**

(22) Filed: **Aug. 12, 2022**

(65) **Prior Publication Data**

US 2024/0052601 A1 Feb. 15, 2024

(51) **Int. Cl.**

E02F 9/26	(2006.01)
B60R 1/27	(2022.01)
E02F 9/24	(2006.01)

(52) **U.S. Cl.**

CPC ***E02F 9/261*** (2013.01); ***B60R 1/27*** (2022.01); ***E02F 9/24*** (2013.01); *B60R 2300/202* (2013.01)

(58) **Field of Classification Search**

CPC E02F 9/261; E02F 9/24; B60R 1/27; B60R 2300/202; B60R 1/00; B60R 1/20; B60R 1/22; B60R 1/24; B60R 1/25; B60R 1/26; B60R 1/28; B60R 11/04; B60R 2300/10; A61B 5/18; B60K 2370/21; B60L 53/37; B60Q 9/005

USPC 348/148

See application file for complete search history.

(56) **References Cited**

U.S. PATENT DOCUMENTS

8,137,008	B1	3/2012	Mallano	
11,029,583	B2	6/2021	Stein	
2015/0288857	A1*	10/2015	Fay	F16M 11/10 348/36
2017/0291546	A1*	10/2017	Lai	B60Q 9/008
2021/0071394	A1*	3/2021	Kean	E02F 9/261
2022/0058826	A1	2/2022	Hasegawa et al.	
2022/0154425	A1*	5/2022	Yamamoto	E02F 9/2203

FOREIGN PATENT DOCUMENTS

CN	100364334	1/2008
GB	2547785	8/2017

* cited by examiner

Primary Examiner — Thai Q Tran
Assistant Examiner — Nienru Yang

(57) **ABSTRACT**

A monitoring system for a work machine includes at least one imaging device disposed on the work machine and at least one mounting device that support the at least one imaging device. The at least one mounting device includes at least one sensor that generates an input signal indicative of a current orientation of the mounting device. The monitoring system further includes a controller including one or more memories and one or more processors. The one or more processors are configured to receive the input signal from the sensor, determine a location of the imaging device on the work machine and a field of view of the imaging device, determine a presence of blind spots around the work machine, and generate a pictorial view depicting the blind spots around the work machine. The monitoring system further includes a user interface that displays the pictorial view thereon.

20 Claims, 4 Drawing Sheets

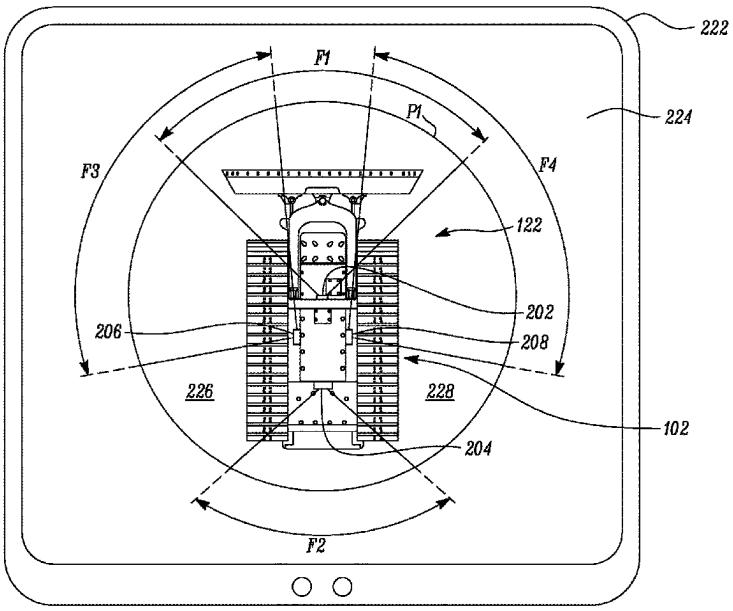

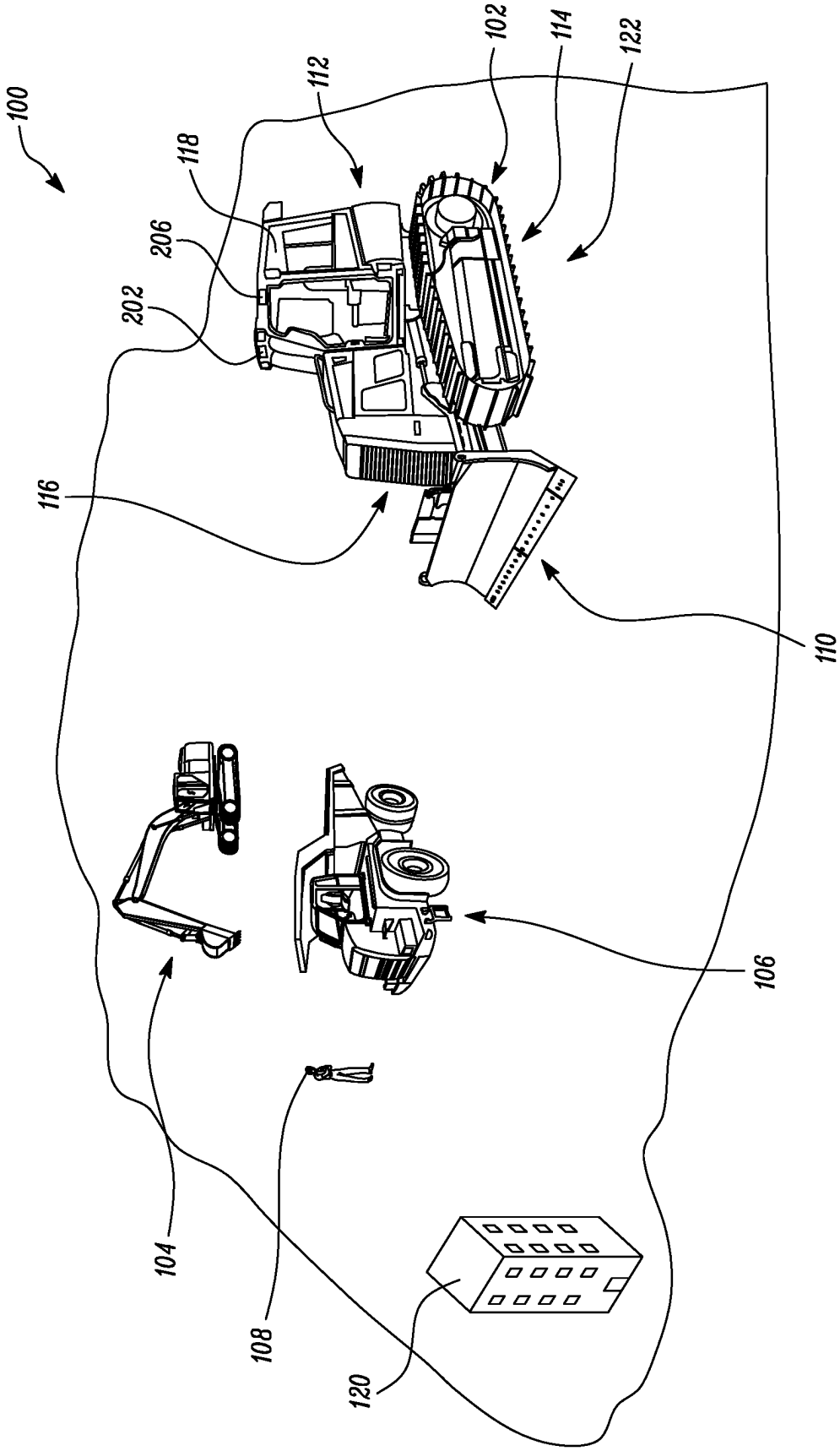

FIG. 1

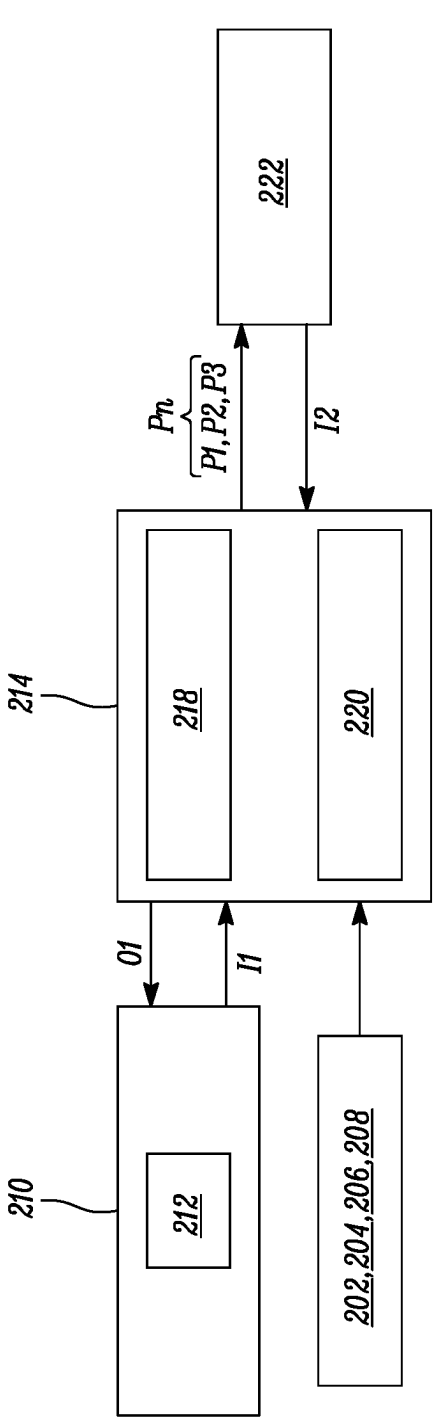

FIG. 2

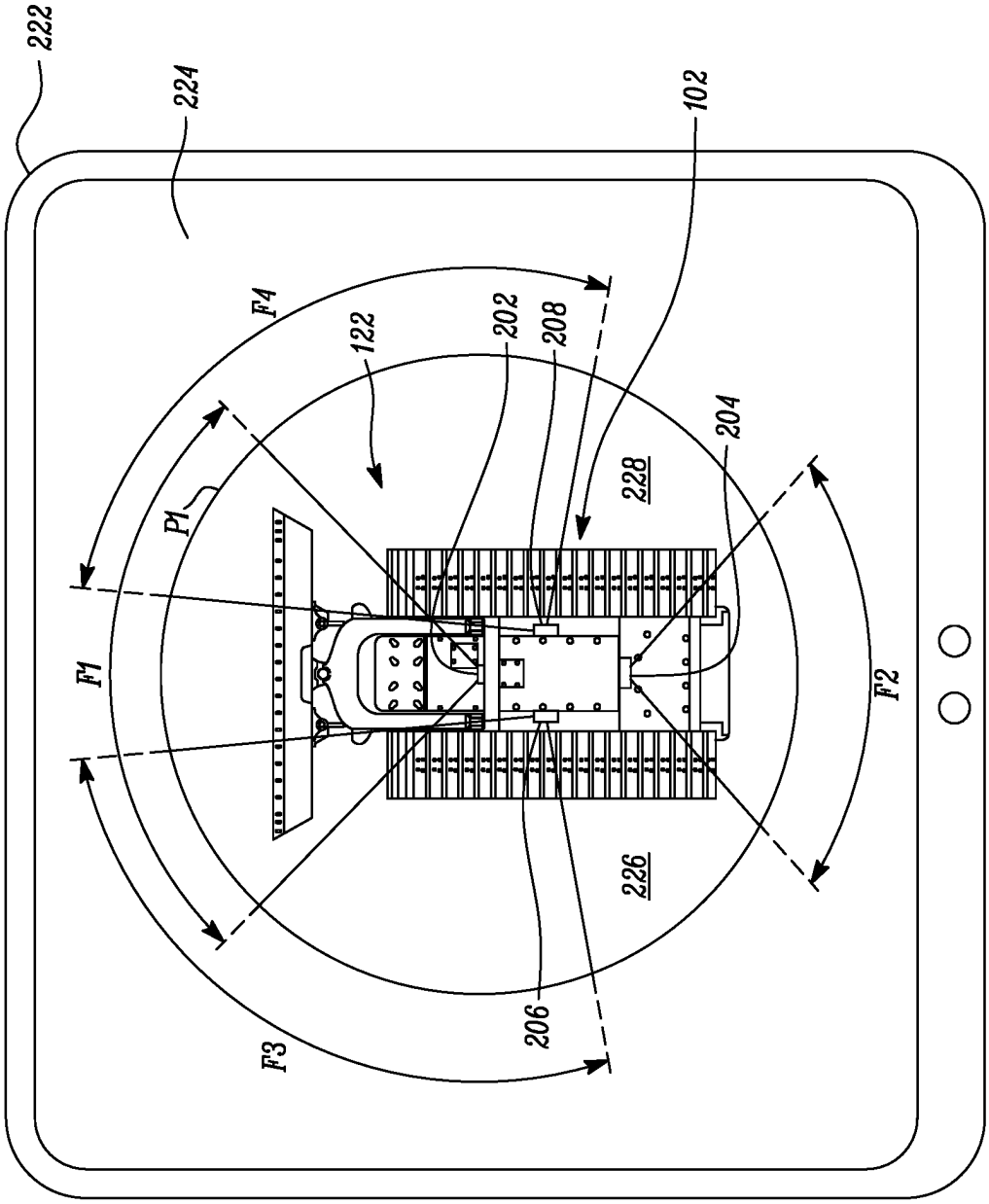

FIG. 3

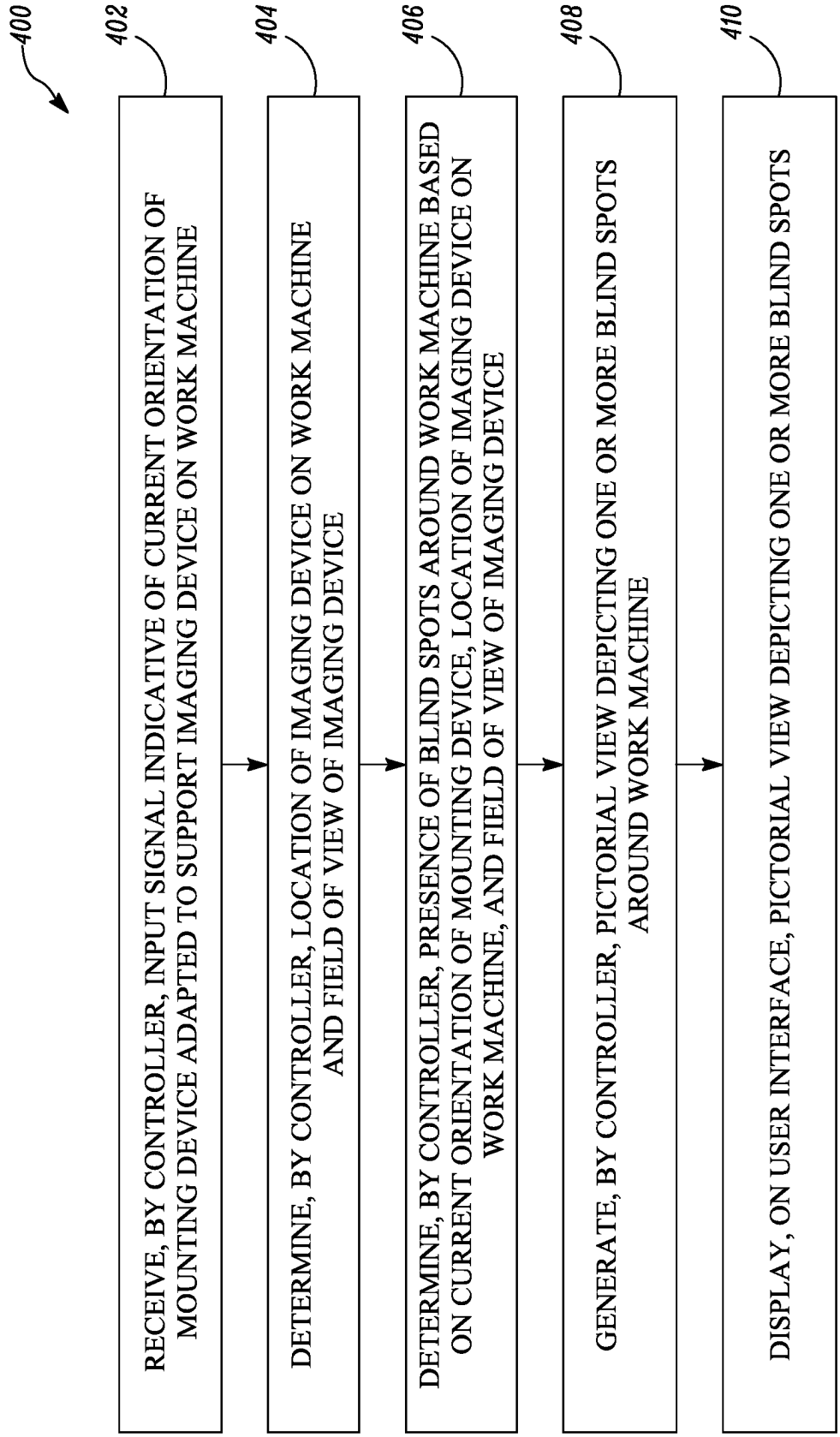
400
402
RECEIVE, BY CONTROLLER, INPUT SIGNAL INDICATIVE OF CURRENT ORIENTATION OF MOUNTING DEVICE ADAPTED TO SUPPORT IMAGING DEVICE ON WORK MACHINE
404
DETERMINE, BY CONTROLLER, LOCATION OF IMAGING DEVICE ON WORK MACHINE AND FIELD OF VIEW OF IMAGING DEVICE
406
DETERMINE, BY CONTROLLER, PRESENCE OF BLIND SPOTS AROUND WORK MACHINE BASED ON CURRENT ORIENTATION OF MOUNTING DEVICE, LOCATION OF IMAGING DEVICE ON WORK MACHINE, AND FIELD OF VIEW OF IMAGING DEVICE
408
GENERATE, BY CONTROLLER, PICTORIAL VIEW DEPICTING ONE OR MORE BLIND SPOTS AROUND WORK MACHINE
410
DISPLAY, ON USER INTERFACE, PICTORIAL VIEW DEPICTING ONE OR MORE BLIND SPOTS

FIG. 4

MONITORING SYSTEM FOR WORK MACHINE

TECHNICAL FIELD

The present disclosure relates to a monitoring system for a work machine and a method of generating awareness of a surrounding area of the work machine.

BACKGROUND

A work machine, such as, a loader, a dozer, and the like may be used to perform various work operations at a worksite. While the work machine is operating at the worksite or travelling from one place to another, it may be desirable to monitor a surrounding area of the work machine to detect a presence of objects or people. For this purpose, one or more imaging devices may be mounted on the work machine. The imaging devices may generate images or videos of the surrounding area of the work machine.

The imaging devices are typically mounted on the work machine in a fixed orientation, and a field of view of the imaging devices may not cover each area surrounding the work machine, thereby creating blind spots for machine operators. In some cases, a mounting device may be used to mount a corresponding imaging device on the work machine. The mounting devices may be used to adjust an orientation of the corresponding imaging device. However, such mounting devices offer limited adjustment capability and may not cover each area surrounding the work machine. Further, as the presence of the blind spots may be dynamic in nature, new blind spots may be created each time the imaging devices are adjusted. Thus, in order to efficiently operate the work machine and to create awareness of the surrounding area of the work machine, it may be imperative that the machine operator is aware of the blind spots around the work machine.

CN100364334C describes a monitoring system and its method using mobile communication terminal dead angle area. A camera is mounted at a rotatable driving part set at the dead angle area of a transport means. One communicating manner is selected from the close range wire/wireless communicating manners set at the mobile communicating terminal and is connected with a camera driving controller which is used for controlling the driving part and is switched-in camera images. The filmed images mentioned above are displayed at a mobile communicating terminal display screen. Once obstacles appear, the camera driving part mentioned above is started-up to change the pointing angle of the camera, and the distance from the obstacle is displayed at the mobile communicating terminal display screen according to the pointing angle to ensure that users can make sure the dead angle area through visions and can grasp the distance to the obstacle. Hence, on the basis of the more specific distance data, the effects of transport means driving safely are obtained.

SUMMARY OF THE DISCLOSURE

In an aspect of the present disclosure, a monitoring system for a work machine is provided. The monitoring system includes at least one imaging device disposed on the work machine. The at least one imaging device has a field of view. The monitoring system also includes at least one mounting device adapted to support the at least one imaging device. The at least one mounting device is adjustable to a plurality of orientations. The at least one mounting device includes at least one sensor configured to generate an input signal indicative of a current orientation of the at least one mounting device. The monitoring system further includes a controller communicably coupled to the at least one imaging device and the at least one mounting device. The controller includes one or more memories and one or more processors communicably coupled with the one or more memories. The one or more processors are configured to receive the input signal from the at least one sensor. The one or more processors are also configured to determine a location of the at least one imaging device on the work machine and the field of view of the at least one imaging device. The one or more processors are further configured to determine a presence of one or more blind spots around the work machine based on the current orientation of the at least one mounting device, the location of the at least one imaging device on the work machine, and the field of view of the at least one imaging device. The one or more processors are configured to generate a pictorial view depicting the one or more blind spots around the work machine. The monitoring system includes a user interface configured to receive the pictorial view from the one or more processors. The user interface is further configured to display the pictorial view thereon.

In another aspect of the present disclosure, a monitoring system for a work machine is provided. The monitoring system includes a controller communicably coupled to at least one imaging device associated with the work machine and at least one mounting device adapted to support the at least one imaging device. The controller includes one or more memories and one or more processors communicably coupled with the one or more memories. The one or more processors are configured to receive an input signal indicative of a current orientation of the at least one mounting device. The one or more processors are also configured to determine a location of the at least one imaging device on the work machine and a field of view of the at least one imaging device. The one or more processors are further configured to determine a presence of one or more blind spots around the work machine based on the current orientation of the at least one mounting device, the location of the at least one imaging device on the work machine, and the field of view of the at least one imaging device. The one or more processors are configured to generate a pictorial view depicting the one or more blind spots around the work machine.

In another aspect of the present disclosure, a method of generating awareness of a surrounding area of a work machine is provided. The method includes receiving, by a controller, an input signal indicative of a current orientation of at least one mounting device adapted to support at least one imaging device on the work machine. The method also includes determining, by the controller, a location of the at least one imaging device on the work machine and a field of view of the at least one imaging device. The method further includes determining, by the controller, a presence of one or more blind spots around the work machine based on the current orientation of the at least one mounting device, the location of the at least one imaging device on the work machine, and the field of view of the at least one imaging device. The method includes generating, by the controller, a pictorial view depicting the one or more blind spots around the work machine. The method also includes displaying, on a user interface, the pictorial view depicting the one or more blind spots.

Other features and aspects of this disclosure will be apparent from the following description and the accompanying drawings.

BRIEF DESCRIPTION OF THE DRAWINGS

FIG. **1** illustrates a worksite and a number of machines operating at the worksite, according to an example of the present disclosure;

FIG. **2** is a block diagram of a monitoring system for the work machine shown in FIG. **1**, according to an example of the present disclosure;

FIG. **3** illustrates a pictorial view displayed on a user interface, according to an example of the present disclosure; and

FIG. **4** is a flowchart for a method of generating awareness of a surrounding area of the work machine, according to an example of the present disclosure.

DETAILED DESCRIPTION

Wherever possible, the same reference numbers will be used throughout the drawings to refer to the same or like parts.

Referring to FIG. **1**, an exemplary worksite **100** is illustrated. The worksite **100** may be a construction site, a mining site, and the like. The worksite **100** includes a number of work machines **102**, **104**, **106** and one or more personnel **108**. Although three work machines **102**, **104**, **106** are illustrated in FIG. **1**, a number of work machines may operate at the worksite **100**. In the illustrated example of FIG. **1**, the work machine **102** includes a track type tractor, the work machine **104** includes an excavator, and the work machine **106** includes an off-highway truck. It should be noted that the work machines **102**, **104**, **106** may include any other type of machine used for performing work operations, such as, loading, hauling, dumping, filling, cutting, excavating, spreading, compacting, grading, dozing, etc.

As shown in FIG. **1**, the work machine **102** includes a front end **110**, a rear end **112**, a first side **114**, and a second side **116**. The work machine **102** also includes an operator cabin **118**. An operator may be seated within the operator cabin **118** of the work machine **102** for controlling the work machine **102**. The operator cabin **118** may include one or more controls (not shown), such as, joysticks, pedals, levers, buttons, switches, knobs, audio visual devices, operator consoles, a steering wheel, and the like. The controls may enable the operator to control the work machine **102**. Alternatively, the operator may be seated at a remote operator station **120** that is externally located relative to the work machine **102**. The remote operator station **120** may include one or more controls that may enable the operator to control the work machines **102**, **104**, **106**. In some examples, a single operator may control each work machine **102**, **104**, **106** while being seated at the remote operator station **120**. Alternatively, the work machines **102**, **104**, **106** may be controlled by different operators seated at the remote operator station **120**.

Referring to FIG. **2**, a block diagram of a monitoring system **200** for the work machine **102** (see FIG. **1**) is illustrated. The monitoring system **200** may be used to monitor and generate awareness of a surrounding area **122** (see FIG. **1**) of the work machine **102**. Although the monitoring system **200** is being explained in relation to the monitoring of the surrounding area **122** of the work machine **102**. The monitoring system **200** may also be used to monitor a surrounding area of the work machines **104**, **106** (see FIG. **1**), without any limitations.

The monitoring system **200** includes one or more imaging devices **202**, **204**, **206**, **208** disposed on the work machine **102**. In the illustrated example of FIG. **2**, the monitoring system **200** includes four imaging devices **202**, **204**, **206**, **208**. However, the monitoring system **200** may include any number of the imaging devices **202**, **204**, **206**, **208**, without any limitations. The one or more imaging devices **202**, **204**, **206**, **208** have a field of view "F**1**", "F**2**", "F**3**", "F**4**" (shown in FIG. **3**). Specifically, the imaging device **202** having the field of view "F**1**" is disposed proximate to the front end **110** (see FIG. **1**) of the work machine **102**. Further, the imaging device **204** having the field of view "F**2**" is disposed proximate to the rear end **112** (see FIG. **1**) of the work machine **102**. Furthermore, the imaging device **206** having the field of view "F**3**" is disposed at the first side **114** (see FIG. **1**) of the work machine **102**. Moreover, the imaging device **208** having the field of view "F**4**" is disposed at the second side **116** (see FIG. **1**) of the work machine **102**.

In an example, the imaging devices **202**, **204**, **206**, **208** may include a camera. In another example, the imaging devices **202**, **204**, **206**, **208** may include a digital video camera, such as, an ethernet camera to provide an electronic motion picture acquisition. It should be noted that the imaging devices **202**, **204**, **206**, **208** may include any other type of conventional imaging device that captures still images or videos.

The monitoring system **200** also includes one or more mounting devices **210** that supports the one or more imaging devices **202**, **204**, **206**, **208**. It should be noted that each imaging device **202**, **204**, **206**, **208** is mounted on the work machine **102** by a corresponding mounting device **210**. Thus, the monitoring system **200** may include four mounting devices **210** to support the four imaging devices **202**, **204**, **206**, **208**. The one or more mounting devices **210** are adjustable to a number of orientations. Based on the adjustment of the one or more mounting devices **210** to different orientations, the field of view "F**1**", "F**2**", "F**3**", "F**4**" of the imaging devices **202**, **204**, **206**, **208**, respectively, may vary so as to capture images or videos of different portions of the surrounding area **122**. The one or more mounting devices **210** includes one or more sensors **212** that generate an input signal "I**1**" indicative of a current orientation of the one or more mounting devices **210**. It should be noted that the mounting devices **210** may include any number of the sensors **212**, without any limitations. In some examples, the one or more sensors **212** may include, but is not limited to, a position sensor.

The mounting devices **210** may include brackets, coupling elements, and the like for movably coupling the mounting devices **210** with a stationary element, such as, a frame of the work machine **102**. Further, each mounting device **210** may include an adjustment assembly (not shown). The adjustment assembly may receive signals for adjusting the mounting device **210** to different orientations relative to the stationary element of the work machine **102**, as per application requirements. In an example, the adjustment assembly may include one or more actuators. It should be noted that each mounting device **210** may include any combination of elements that may allow adjustment of the mounting device **210** to different orientations.

The monitoring system **200** further includes a controller **214** communicably coupled to the one or more imaging devices **202**, **204**, **206**, **208** associated with the work machine **102** and the one or more mounting devices **210** that supports the one or more imaging devices **202**, **204**, **206**, **208**. In some examples, the imaging devices **202**, **204**, **206**, **208** and the mounting devices **210** may be communicably coupled to the controller **214**, via a communication medium (not shown). Examples of the communication medium may include, but are not limited to, a Wide Area Network (WAN),

a Local Area Network (LAN), an internet, an intranet, a cellular network, a satellite network, or any other known network for transmitting and receiving data. In various examples, the communication medium may include a combination of two or more of the aforementioned networks and/or other types of networks known in the art. Further, the communication medium may be implemented as a wired network, a wireless network, or a combination thereof. In an example, the controller **214** may be present onboard the work machine **102**. In another example, the controller **214** may be present at the remote operator station **120** (see FIG. **1**).

The controller **214** includes one or more memories **218** and one or more processors **220** communicably coupled with the one or more memories **218**. Further, the one or more processors **220** may be communicably coupled to the one or more sensors **212**. The one or more processors **220** may be any device that performs logic operations. It should be noted that the one or more processors **220** may embody a single microprocessor or multiple microprocessors for receiving various input signals. Numerous commercially available microprocessors may be configured to perform the functions of the one or more processors **220**. The one or more processors **220** may further include a general processor, a central processing unit, an application specific integrated circuit (ASIC), a digital signal processor, a field programmable gate array (FPGA), a digital circuit, an analog circuit, a controller, a microcontroller, any other type of processor, or any combination thereof. The one or more processors **220** may include one or more components that may be operable to execute computer executable instructions or computer code that may be stored and retrieved from the one or more memories **218**.

In some examples, the mounting devices **210** are adjustable based on an input received from the operator. More particularly, the processors **220** may receive the input from the operator to adjust the mounting devices **210** to a desired orientation based on a preference of the operator. Accordingly, the processors **220** may control the adjustment assembly associated with the corresponding mounting device **210** for adjusting the mounting devices **210** to the desired orientation.

In another example, the mounting devices **210** may be automatically adjustable based on the preference of the operator. For example, the mounting devices **210** may be automatically adjusted based on a change in a state of the work machine **102**. More particularly, if the work machine **102** switches to a parked state, the mounting devices **210** may be automatically adjusted so that the imaging devices **202**, **204**, **206**, **208** can provides improved ground coverage. Further, when the work machine **102** is not in the parked state, the mounting devices **210** may be automatically adjusted so that the imaging devices **202**, **204**, **206**, **208** may provide optimum views of the surrounding area **122** of the work machine **102**. In such examples, the memories **218** may contain prestored information related to preferences of multiple operators. Further, the processors **220** may identify the operator who is currently in charge of the work machine **102**. Based on the identification, the processors **220** may automatically adjust the mounting devices **210** to a desired orientation, as per the preference of the identified operator.

The monitoring system **200** further includes a user interface **222** communicably coupled to the controller **214**. In an example, the user interface **222** is present within the operator cabin **118** of the work machine **102**. In another example, the user interface **222** is present at the remote operator station **120** that is externally located relative to the work machine **102**. In yet another example, the user interface **222** may be present with the personnel **108** (see FIG. **1**). Further, the controller **214** may be an integral component of the user interface **222**. Alternatively, the controller **214** and the user interface **222** may be embodied as separate components.

The user interface **222** includes a display screen **224** (shown in FIG. **3**). The user interface **222** may include an electroluminescent display, liquid crystal display (LCD), light-emitting diode (LED) display, a thin-film transistor (TFT), and the like. Further, the user interface **222** may include a portable handheld device, such as, a mobile phone, a tablet, and the like. The user interface **222** embody a laptop, a desktop, and the like. The user interface **222** may embody a touch screen. In such an example, the user interface **222** may present various control icons on the touch screen. Alternatively, the user interface **222** may include one or more physical input devices, such as, a switch, a button, a lever, a knob, and the like, without any limitations, as well as their image representations on the touch screen. It may also be contemplated that the user interface **222** may embody a heads-up display unit, without any limitations. Further, the user interface **222** may generate visual notifications as well as audible notifications.

Further, the one or more processors **220** receive the input signal "I**1**" indicative of the current orientation of the one or more mounting devices **210**. Specifically, the one or more processors **220** receive the input signal "I**1**" from the one or more sensors **212**. It should be noted that the input signal "I**1**" may be generated each time the one or more mounting devices **210** are adjusted, so that the processors **220** have a real-time data of the current orientation of the mounting devices **210**.

Further, the one or more processors **220** determine a location of the one or more imaging devices **202**, **204**, **206**, **208** on the work machine **102** and the field of view "F**1**", "F**2**", "F**3**", "F**4**" of the one or more imaging devices **202**, **204**, **206**, **208**. The location of the imaging devices **202**, **204**, **206**, **208** may be prestored within the memories **218** of the controller **214**. Further, the processors **220** may retrieve information pertaining to the location of the imaging devices **202**, **204**, **206**, **208** from the memories **218**. In some examples, the memories **218** may also store information related to dimensions of the work machine **102**. The dimensions of the work machine **102** may be used to determine the location of the imaging devices **202**, **204**, **206**, **208** with respect to one or more portions of the work machine **102**, such as the operator cabin **118** or one or more work implements of the work machine **102**. In an example, the field of view "F**1**", "F**2**", "F**3**", "F**4**" of the imaging devices **202**, **204**, **206**, **208**, respectively, may be prestored within the memories **218** of the controller **214** and may be retrieved from the processors **220** as and when required. In another example, the field of view "F**1**", "F**2**", "F**3**", "F**4**" may be a dynamic parameter that may be updated in real-time each time the mounting devices **210** are adjusted.

Further, the one or more processors **220** determine the presence of one or more blind spots **226**, **228** (shown in FIG. **3**) around the work machine **102** based on the current orientation of the one or more mounting devices **210**, the location of the one or more imaging devices **202**, **204**, **206**, **208** on the work machine **102**, and the field of view "F**1**", "F**2**", "F**3**", "F**4**" of the one or more imaging devices **202**, **204**, **206**, **208**. The term "blind spots" as used herein may refer to an area around the work machine **102** that does not lie in the field of view "F**1**", "F**2**", "F**3**", "F**4**" of the imaging devices **202**, **204**, **206**, **208**.

Further, the one or more processors **220** generate a pictorial view "P**1**" depicting the one or more blind spots **226**, **228** around the work machine **102**. Specifically, the one or more processors **220** generate the pictorial view "P**1**" depicting the one or more blind spots **226**, **228** each time the one or more mounting devices **210** are adjusted. More particularly, when the mounting devices **210** are adjusted, the field of view "F**1**", "F**2**", "F**3**", "F**4**" of the imaging devices **202**, **204**, **206**, **208**, respectively, may change due to which a location of the blind spots **226**, **228** may vary. Thus, the processors **220** may generate an updated pictorial view depicting the blind spots **226**, **228** each time the mounting devices **210** are adjusted.

Furthermore, the user interface **222** receives the pictorial view "P**1**" from the one or more processors **220**. Moreover, the user interface **222** displays the pictorial view "P**1**" thereon. It should be noted that the pictorial view "P**1**" may include a still image or a video that is displayed on the display screen **224** of the user interface **222**. In addition to the pictorial view "P**1**", the user interface **222** may also provide audible alerts (such as, voice messages) to the operator regarding the presence of the blind spots **226**, **228**. In some examples, the user interface **222** may flash warning lights to alert the operator regarding the presence of the one or more blind spots **226**, **228**. It may be noted that the user interface **222** may use a single technique or a combination of techniques to alert the operator regarding the presence of the blind spots **226**, **228**, and the present disclosure is not limited by a technique of alerting the operator regarding the presence of the blind spots **226**, **228**.

FIG. **3** illustrates the exemplary pictorial view "P**1**" displayed on the user interface **222**. The pictorial view "P**1**" is displayed on the display screen **224** of the user interface **222**. It should be noted that, for illustrative purposes, only the pictorial view "P**1**" is shown on the display screen **224**. However, the display screen **224** may also display other notifications, such as, available fuel capacity, speed of the work machine **102**, and the like, without any limitations.

As shown in FIG. **3**, the pictorial view "P**1**" includes the one or more blind spots **226**, **228** around the work machine **102**. In the illustrated example of FIG. **3**, the blind spot **226** is present between the field of views "F**2**", "F**3**", and the blind spot **228** is present between the field of views "F**2**", "F**4**". In other examples, the pictorial view "P**1**" may include a single blind spot or any number of blind spots, without any limitations.

The pictorial view "P**1**" further depicts the field of view "F**1**", "F**2**", "F**3**", "F**4**" of the one or more imaging devices **202**, **204**, **206**, **208**. As illustrated herein, the field of views "F**1**", "F**3**" of the imaging devices **202**, **206** overlap with each other, and the field of views "F**1**", "F**4**" of the imaging devices **202**, **208** overlap with each other. In some examples, each field of view "F**1**", "F**2**", "F**3**", "F**4**" may be depicted by a unique indicating feature. For example, the field of views "F**1**", "F**2**", "F**3**", "F**4**" may be depicted by different colors, different hatchings, or any other indication features, without any limitations.

Referring again to FIG. **2**, in some examples, based on the determination of the one or more blind spots **226**, **228** (see FIG. **3**) around the work machine **102**, the one or more processors **220** further generate an output signal "O**1**" for adjusting the one or more mounting devices **210** in order to minimize an area of the one or more blind spots **226**, **228**. More particularly, the processors **220** may analyze a location of the blind spots **226**, **228** around the work machine **102**. Based on the analysis, the processors **220** may determine an orientation of the mounting devices **210** that may minimize the blind spots **226**, **228**, and more particularly, the area of the blind spots **226**, **228**. In some examples, the processors **220** may analyze if the field of views "F**1**", "F**2**", "F**3**", "F**4**" of two or more imaging devices **202**, **204**, **206**, **208** overlap with each other. In such examples, the processors **220** may adjust the mounting devices **210** of the one or more of the imaging devices **202**, **204**, **206**, **208** in a manner that may minimize the overlapping field of views while also minimizing the area of the blind spots **226**, **228**.

Further, in some examples, the operator seated at the remote operator station **120** (see FIG. **1**) may be in charge of operating each work machine **102**, **104**, **106** (see FIG. **1**) at the worksite **100** (see FIG. **1**). Thus, the operator may desire to view blind spots around each work machine **102**, **104**, **106** at the worksite **100**. In such examples, the one or more processors **220** generate a number of pictorial views "Pn" corresponding to the number of work machines **102**, **104**, **106**. The pictorial views "P**1**", "P**2**", "P**3**" from the number of pictorial views "Pn" may depict one or more blind spots present around the corresponding work machine **102**, **104**, **106**.

Further, the one or more processors **220** transmit the one or more pictorial views "P**1**", "P**2**", "P**3**" from the number of pictorial views "Pn" based on an operator input "I**2**". More particularly, the processors **220** may receive the operator input "I**2**" via the user interface **222**. Accordingly, one or more of the pictorial views "P**1**", "P**2**", "P**3**" may be displayed on the user interface **222**. Thus, when the operator is in charge of operating the work machines **102**, **104**, **106**, it may be possible to switch between the pictorial views "P**1**", "P**2**", "P**3**" of the work machines **102**, **104**, **106**, based on the operator input "I**2**". In some examples, the user interface **222** may display two or more of the pictorial views "P**1**", "P**2**", "P**3**" adjacent to each other, based on an input received from the operator so that the operator is aware of the blind spots around each work machine **102**, **104**, **106**.

INDUSTRIAL APPLICABILITY

The present disclosure relates to the monitoring system **200** associated with the work machine **102**. The monitoring system **200** includes the imaging devices **202**, **204**, **206**, **208**, the mounting devices **210** for supporting the corresponding imaging device **202**, **204**, **206**, **208**, and the controller **214** communicably coupled to the imaging devices **202**, **204**, **206**, **208** and the mounting devices **210**. The monitoring system **200** may generate awareness of the surrounding area **122** of the work machine **102**. More particularly, based on the current orientation of the mounting devices **210**, the location of the imaging devices **202**, **204**, **206**, **208**, and the field of view "F**1**", "F**2**", "F**3**", "F**4**" of the imaging devices **202**, **204**, **206**, **208**, the monitoring system **200** may be used to determine the presence of the one or more blind spots **226**, **228** around the work machine **102**.

The monitoring system **200** described herein may provide a real time update of the blind spots **226**, **228** present around the work machine **102**. The monitoring system **200** may improve an accuracy with which the work machine **102** may be monitored. The monitoring system **200** may further allow adjustment of the mounting devices **210** to a desired orientation so that the area of the one or more blind spots **226**, **228** is minimal. Thus, the monitoring system **200** may ensure that a maximum region of the surrounding area **122** of the work machine **102** lies in the field of view "F**1**", "F**2**", "F**3**", "F**4**" of the imaging devices **202**, **204**, **206**, **208**, thereby improving monitoring of the work machine **102**. Furthermore, the monitoring system **200** may also generate the

pictorial view "P1" depicting the one or more blind spots **226**, **228** that can be displayed on the user interface **222** present in the operator cabin **118** or the remote operator station **120**. The monitoring system **200** may improve a confidence of the operator, improve operator awareness, and may reduce a scope of errors while operating the work machine **102**.

Further, the monitoring system **200** may be embodied as a modular monitoring system that may be used with different types of work machines. The monitoring system **200** may be embodied as an aftermarket kit that may be used to monitor blind spots around various work machines. Further, the monitoring system **200** includes usage of conventional imaging devices that may be already present on existing work machines or can be easily mounted on existing work machines with minimum modifications. Moreover, the mounting devices **210** may include low-cost elements that may be easily retrofitted on existing work machines. Thus, the monitoring system **200** may be cost-effective to incorporate on various work machines.

Referring to FIG. **4**, a flowchart for a method **400** of generating awareness of the surrounding area **122** of the work machine **102** is illustrated, in accordance with an example of the present disclosure. At step **402**, the controller **214** receives the input signal "I1" indicative of the current orientation of the one or more mounting devices **210** that support the one or more imaging devices **202**, **204**, **206**, **208** on the work machine **102**.

At step **404**, the controller **214** determines the location of the one or more imaging devices **202**, **204**, **206**, **208** on the work machine **102** and the field of view "F1", "F2", "F3", "F4" of the one or more imaging devices **202**, **204**, **206**, **208**.

At step **406**, the controller **214** determines the presence of the one or more blind spots **226**, **228** around the work machine **102** based on the current orientation of the one or more mounting devices **210**, the location of the one or more imaging devices **202**, **204**, **206**, **208** on the work machine **102**, and the field of view "F1", "F2", "F3", "F4" of the one or more imaging devices **202**, **204**, **206**, **208**.

At step **408**, the controller **214** generates the pictorial view "P1" depicting the one or more blind spots **226**, **228** around the work machine **102**. In some examples, the controller **214** generates the pictorial view "P1" depicting the one or more blind spots **226**, **228** each time the one or more mounting devices **210** are adjusted. At step **410**, the user interface **222** displays the pictorial view "P1" depicting the one or more blind spots **226**, **228**.

In some examples, the controller **214** generates the number of pictorial views "Pn" corresponding to the number of work machines **102**, **104**, **106**. The controller **214** further transmits the one or more pictorial views "P1", "P2", "P3" from the number of pictorial views "Pn" based on the operator input "I2".

In some examples, the controller **214** further generates the output signal "O1" for adjusting the one or more mounting devices **210** in order to minimize the area of the one or more blind spots **226**, **228** based on the determination of the one or more blind spots **226**, **228** around the work machine **102**.

While aspects of the present disclosure have been particularly shown and described with reference to the embodiments above, it will be understood by those skilled in the art that various additional embodiments may be contemplated by the modification of the disclosed work machines, systems and methods without departing from the spirit and scope of the disclosure. Such embodiments should be understood to fall within the scope of the present disclosure as determined based upon the claims and any equivalents thereof.

What is claimed is:

1. A monitoring system for a work machine, the monitoring system comprising:

at least one imaging device having a field of view;

at least one mounting device disposed at a mounting location on the work machine, wherein the at least one mounting device:

is adapted to support the at least one imaging device,

comprises components that movably couple the at least one mounting device to a frame of the work machine and cause the at least one mounting device to be adjustable to a plurality of orientations relative to the frame of the work machine, and

comprises at least one position sensor configured to generate a positional signal indicative of a current orientation of the at least one mounting device relative to the frame of the work machine;

a controller communicably coupled to the at least one imaging device and the at least one mounting device, wherein the controller includes one or more memories and one or more processors communicably coupled with the one or more memories, and wherein the controller is configured to:

receive the positional signal, indicating the current orientation of the at least one mounting device relative to the frame of the work machine, from the at least one position sensor of the at least one mounting device;

determine the mounting location of the at least one mounting device and the at least one imaging device on the work machine;

determine the field of view of the at least one imaging device;

determine areas of one or more blind spots, around the work machine and outside the field of view of the at least one imaging device, based on:

the current orientation of the at least one mounting device relative to the frame of the work machine,

the mounting location of the at least one mounting device and the at least one imaging device on the work machine, and

the field of view of the at least one imaging device; and

generate a pictorial view depicting the areas of the one or more blind spots around the work machine and outside the field of view of the at least one imaging device; and

a user interface configured to:

receive the pictorial view from the controller; and

display the pictorial view depicting the areas of the one or more blind spots around the work machine and outside the field of view of the at least one imaging device.

2. The monitoring system of claim **1**, wherein the controller is configured to generate the pictorial view, depicting the areas of the one or more blind spots, at times at which the positional signal indicates that the current orientation of the at least one mounting device, relative to the frame, has been adjusted.

3. The monitoring system of claim **1**, wherein the pictorial view further depicts second areas within the field of view of the at least one imaging device.

4. The monitoring system of claim **1**, wherein the user interface is present within an operator cabin of the work machine.

5. The monitoring system of claim 1, wherein the user interface is present at a remote operator station that is externally located relative to the work machine.

6. The monitoring system of claim 1, wherein the controller is further configured to:

generate a plurality of pictorial views; and

transmit at least one pictorial view from the plurality of pictorial views based on an operator input.

7. The monitoring system of claim 1, wherein, based on determining the areas of the one or more blind spots, around the work machine and outside the field of view of the at least one imaging device, the controller is further configured to generate an output signal for adjusting the current orientation of the at least one mounting device in order to minimize the areas of the one or more blind spots.

8. The monitoring system of claim 1, wherein:

the at least one imaging device comprises a plurality of imaging devices,

the at least one mounting device comprises a plurality of mounting devices, different mounting devices of the plurality of mounting devices being disposed at different mounting locations on the work machine and being adapted to support different imaging devices of the plurality of imaging devices,

the controller is configured to receive positional signals, from position sensors associated with the different mounting devices, indicating respective current orientations of the different mounting devices relative to the frame of the work machine,

the areas of the one or more blind spots, depicted in the pictorial view, are around the work machine and outside a collective field of view of the plurality of imaging devices, and

the controller is configured to determine the areas of the one or more blind spots based on:

the respective current orientations of the different mounting devices,

respective mounting locations of the different mounting devices and the different imaging devices on the work machine, and

respective fields of view of the different imaging devices.

9. A monitoring system for a work machine, the monitoring system comprising:

a controller communicably coupled to at least one imaging device associated with the work machine and at least one mounting device,

wherein the at least one mounting device:

is adapted to support the at least one imaging device, and

comprises components that movably couple the at least one mounting device to a frame of the work machine and cause the at least one mounting device to be adjustable to a plurality of orientations relative to the frame of the work machine,

wherein the controller includes one or more memories and one or more processors communicably coupled with the one or more memories, and

wherein the controller is configured to:

receive a positional signal indicative of a current orientation, of the plurality of orientations, of the at least one mounting device relative to the frame of the work machine;

determine a mounting location of the at least one mounting device and the at least one imaging device on the work machine;

determine a field of view of the at least one imaging device;

determine areas of one or more blind spots, around the work machine and outside the field of view of the at least one imaging device, based on:

the current orientation of the at least one mounting device relative to the frame of the work machine,

the mounting location of the at least one mounting device and the at least one imaging device on the work machine, and

the field of view of the at least one imaging device; and

generate a pictorial view depicting the areas of the one or more blind spots around the work machine and outside the field of view of the at least one imaging device.

10. The monitoring system of claim 9, further comprising a user interface configured to:

receive the pictorial view from the controller; and

display the pictorial view.

11. The monitoring system of claim 10, wherein the user interface is:

present within an operator cabin of the work machine, or

present at a remote operator station that is externally located relative to the work machine.

12. The monitoring system of claim 10, wherein the controller is further configured to:

generate a plurality of pictorial views corresponding to a plurality of work machines; and

transmit, to the user interface, at least one pictorial view from the plurality of pictorial views based on an operator input.

13. The monitoring system of claim 9, wherein:

the at least one mounting device comprises at least one position sensor configured to:

determine the current orientation of the at least one mounting device relative to the frame; and

generate the positional signal indicative of the current orientation of the at least one mounting device relative to the frame, and

the controller receives the positional signal from the at least one position sensor of the at least one mounting device.

14. The monitoring system of claim 9, wherein the controller is configured to generate the pictorial view, depicting the areas of the one or more blind spots, at times at which the positional signal indicates that the current orientation of the at least one mounting device, relative to the frame of the work machine, has been adjusted.

15. The monitoring system of claim 9, wherein the pictorial view further depicts second areas within the field of view of the at least one imaging device.

16. The monitoring system of claim 9, wherein, based on determining the areas of the one or more blind spots, around the work machine and outside the field of view of the at least one imaging device, the controller is further configured to generate an output signal for adjusting the current orientation of the at least one mounting device in order to minimize the areas of the one or more blind spots.

17. A method of generating awareness of a surrounding area around a work machine, the method comprising:

receiving, by a controller, a positional signal indicative of a current orientation of at least one mounting device, wherein the at least one mounting device:

is adapted to support at least one imaging device on the work machine, and

comprises components that movably couple the at least one mounting device to a frame of the work machine and cause the at least one mounting device to be adjustable to a plurality of orientations relative to the frame of the work machine;

determining, by the controller, a mounting location of the at least one mounting device and the at least one imaging device on the work machine;

determining, by the controller, a field of view of the at least one imaging device;

determining, by the controller, areas of one or more blind spots, within the surrounding area around the work machine and outside the field of view of the at least one imaging device, based on:

the current orientation of the at least one mounting device relative to the frame of the work machine,

the mounting location of the at least one mounting device and the at least one imaging device on the work machine, and

the field of view of the at least one imaging device;

generating, by the controller, a pictorial view depicting the areas of the one or more blind spots within the surrounding area around the work machine and outside the field of view of the at least one imaging device; and

displaying, on a user interface, the pictorial view depicting the areas of the one or more blind spots.

18. The method of claim **17**, further comprising generating, by the controller, the pictorial view depicting the areas of the one or more blind spots at times at which the positional signal indicates that the current orientation of the at least one mounting device, relative to the frame of the work machine, has been adjusted.

19. The method of claim **17**, further comprising:

generating, by the controller, a plurality of pictorial views corresponding to a plurality of work machines; and

transmitting, by the controller, at least one pictorial view from the plurality of pictorial views based on an operator input.

20. The method of claim **17**, further comprising generating, by the controller, an output signal for adjusting the current orientation of the at least one mounting device in order to minimize the areas of the one or more blind spots based on determining the areas of the one or more blind spots within the surrounding area around the work machine.

* * * * *