US012416919B2

(12) **United States Patent**
Cooper

(10) **Patent No.: US 12,416,919 B2**
(45) **Date of Patent: Sep. 16, 2025**

(54) **AUTONOMOUSLY DELIVERING ITEMS TO CORRESPONDING DELIVERY LOCATIONS PROXIMATE A DELIVERY ROUTE**

(71) Applicant: **United Parcel Service of America, Inc.**, Atlanta, GA (US)

(72) Inventor: **Jeffrey Cooper**, Marietta, GA (US)

(73) Assignee: **UNITED PARCEL SERVICE OF AMERICA, INC.**, Atlanta, GA (US)

(*) Notice: Subject to any disclaimer, the term of this patent is extended or adjusted under 35 U.S.C. 154(b) by 227 days.

(21) Appl. No.: **17/878,712**

(22) Filed: **Aug. 1, 2022**

(65) **Prior Publication Data**

US 2022/0365535 A1 Nov. 17, 2022

Related U.S. Application Data

(63) Continuation of application No. 16/921,454, filed on Jul. 6, 2020, now Pat. No. 11,435,744, which is a

(Continued)

(51) **Int. Cl.**
G05D 1/00 (2024.01)
B64D 1/00 (2006.01)

(Continued)

(52) **U.S. Cl.**
CPC ***G05D 1/0202*** (2013.01); ***B64D 1/00*** (2013.01); ***B64U 10/16*** (2023.01); ***B64U 70/00*** (2023.01);

(Continued)

(58) **Field of Classification Search**
CPC G05D 1/0202; G06Q 10/047; G06Q 10/08; G06Q 10/083; G01C 21/20;

(Continued)

(56) **References Cited**

U.S. PATENT DOCUMENTS

3,053,480 A 9/1962 Vanderlip
3,526,127 A 9/1970 Sarkis

(Continued)

FOREIGN PATENT DOCUMENTS

CA 2978945 A1 9/2016
CN 1545668 A 11/2004

(Continued)

OTHER PUBLICATIONS

Cardinal Health, "Fighting Diversion, The Cardinal Health Suspicious Order Monitoring Program," accessed on Jul. 1, 2010, 1 page, <http://www. cardinal.com/us/en/solutions/medication-safety/manufacturer-store/fighting-diversion>.

(Continued)

Primary Examiner — Rodney A Bonnette
(74) *Attorney, Agent, or Firm* — SHOOK, HARDY & BACON L.L.P.; Elena McFarland

(57) **ABSTRACT**

Various systems and methodologies may be utilized to determine whether a particular shipment/item is eligible for delivery between a manual delivery vehicle and a final destination location via an autonomous delivery vehicle. To ensure autonomous deliveries are performed in a resource effective manner, shipments/items deemed eligible for autonomous delivery may be vetted by comparing the destination for the autonomous delivery shipment/item against one or more manual delivery destinations (serviced by the manual delivery vehicle operator), and ultimately identifying an optimal launch location for the autonomous delivery vehicle to leave the manual delivery vehicle to complete the autonomous delivery. If the autonomous delivery location does not satisfy applicable autonomous delivery criteria, the autonomous delivery shipment/item may be reclassified for manual delivery by the manual delivery vehicle operator.

17 Claims, 16 Drawing Sheets

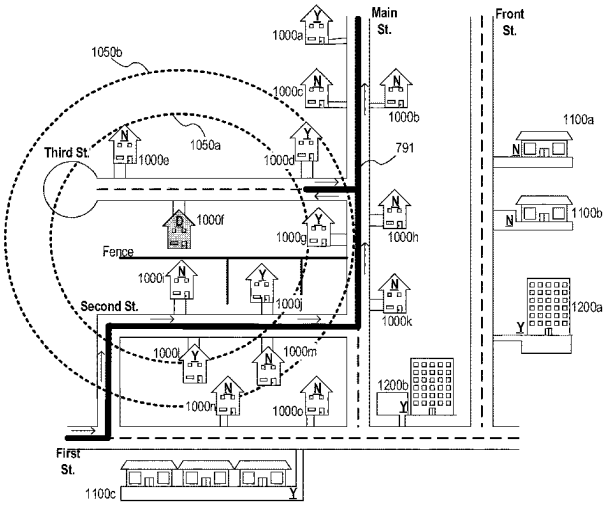

Related U.S. Application Data

continuation of application No. 15/621,140, filed on Jun. 13, 2017, now Pat. No. 10,775,792.

(51) **Int. Cl.**

B64U 10/16	(2023.01)
B64U 70/00	(2023.01)
B64U 101/60	(2023.01)
G01C 21/20	(2006.01)
G06Q 10/047	(2023.01)
G06Q 10/08	(2024.01)
G06Q 10/083	(2024.01)
G06Q 50/40	(2024.01)
G08G 5/26	(2025.01)
G08G 5/32	(2025.01)
G08G 5/54	(2025.01)
G08G 5/55	(2025.01)
G08G 5/57	(2025.01)
B64U 50/19	(2023.01)
G01S 13/935	(2020.01)
G01S 17/933	(2020.01)
G08G 5/80	(2025.01)

(52) **U.S. Cl.**

CPC ***G01C 21/20*** (2013.01); ***G06Q 10/047*** (2013.01); ***G06Q 10/08*** (2013.01); ***G06Q 10/083*** (2013.01); ***G06Q 50/40*** (2024.01); ***G08G 5/26*** (2025.01); ***G08G 5/32*** (2025.01); ***G08G 5/54*** (2025.01); ***G08G 5/55*** (2025.01); ***G08G 5/57*** (2025.01); *B64U 50/19* (2023.01); *B64U 2101/60* (2023.01); *B64U 2201/104* (2023.01); *G01S 13/935* (2020.01); *G01S 17/933* (2013.01); *G08G 5/80* (2025.01)

(58) **Field of Classification Search**

CPC B64C 39/024; B64D 1/00; B64U 2101/60; B64U 2101/64; B64U 2201/104; G08G 5/0013; G08G 5/0034; G08G 5/0069

See application file for complete search history.

(56) **References Cited**

U.S. PATENT DOCUMENTS

3,591,310	A	7/1971	Mouille
3,986,686	A	10/1976	Girard
4,478,379	A	10/1984	Kerr
4,493,136	A	1/1985	Groutage et al.
4,542,928	A	9/1985	Fowler, Jr.
4,553,719	A	11/1985	Ott
4,609,167	A	9/1986	Dean et al.
4,626,993	A	12/1986	Okuyama et al.
4,773,011	A	9/1988	Vanhoose
4,777,416	A	10/1988	George et al.
4,795,111	A	1/1989	Moller
4,809,540	A	3/1989	Lackner et al.
4,842,218	A	6/1989	Groutage et al.
4,945,759	A	8/1990	Krofchalk et al.
4,992,947	A	2/1991	Nimura et al.
5,041,976	A	8/1991	Marko et al.
5,060,156	A	10/1991	Vajgart et al.
5,170,353	A	12/1992	Verstraete
5,272,638	A	12/1993	Martin et al.
5,470,233	A	11/1995	Fruchterman et al.
5,474,259	A	12/1995	De et al.
5,491,631	A	2/1996	Shirane et al.
5,544,061	A	8/1996	Morimoto et al.
5,559,707	A	9/1996	Delorme et al.
5,587,911	A	12/1996	Asano et al.
5,680,312	A	10/1997	Oshizawa et al.
5,774,828	A	6/1998	Brunts et al.
5,798,733	A	8/1998	Ethridge
5,802,492	A	9/1998	Delorme et al.
5,815,093	A	9/1998	Kikinis
5,831,860	A	11/1998	Foladare et al.
5,874,905	A	2/1999	Nanba et al.
5,887,269	A	3/1999	Brunts et al.
5,890,441	A	4/1999	Swinson et al.
5,896,968	A	4/1999	Bruntz
5,928,291	A	7/1999	Jenkins et al.
5,931,888	A	8/1999	Hiyokawa
5,968,109	A	10/1999	Israni et al.
5,987,381	A	11/1999	Oshizawa
6,002,981	A	12/1999	Kreft
6,056,237	A	5/2000	Woodland
6,064,941	A	5/2000	Nimura et al.
6,084,870	A	7/2000	Wooten et al.
6,091,325	A	7/2000	Zur et al.
6,092,021	A	7/2000	Ehlbeck et al.
6,108,603	A	8/2000	Karunanidhi
6,112,152	A	8/2000	Tuttle
6,112,200	A	8/2000	Livshutz et al.
6,115,669	A	9/2000	Watanabe et al.
6,163,748	A	12/2000	Guenther
6,178,377	B1	1/2001	Ishihara et al.
6,181,994	B1	1/2001	Colson et al.
6,201,544	B1	3/2001	Ezaki et al.
6,232,915	B1	5/2001	Dean et al.
6,249,740	B1	6/2001	Ito et al.
6,253,129	B1	6/2001	Jenkins et al.
6,270,038	B1	8/2001	Cycon et al.
6,282,489	B1	8/2001	Bellesfield et al.
6,301,531	B1	10/2001	Pierro et al.
6,306,063	B1	10/2001	Horgan et al.
6,321,158	B1	11/2001	Delorme et al.
6,324,659	B1	11/2001	Pierro
6,330,499	B1	12/2001	Chou et al.
6,336,073	B1	1/2002	Ihara et al.
6,338,152	B1	1/2002	Fera et al.
6,356,838	B1	3/2002	Paul
6,389,337	B1	5/2002	Kolls
6,411,891	B1	6/2002	Jones
6,421,605	B1	7/2002	Steiner et al.
6,424,157	B1	7/2002	Gollomp et al.
6,438,471	B1	8/2002	Katagishi et al.
6,456,933	B1	9/2002	Hessing
6,459,969	B1	10/2002	Bates et al.
6,459,986	B1	10/2002	Boyce et al.
6,462,675	B1	10/2002	Humphrey et al.
6,463,343	B1	10/2002	Emens et al.
6,484,080	B2	11/2002	Breed
6,498,982	B2	12/2002	Bellesfield et al.
6,498,986	B1	12/2002	Kurtzberg et al.
6,509,749	B1	1/2003	Buelna et al.
6,525,672	B2	2/2003	Chainer et al.
6,549,833	B2	4/2003	Katagishi et al.
6,553,816	B1	4/2003	Palanisamy et al.
6,571,213	B1	5/2003	Altendahl et al.
6,577,937	B1	6/2003	Shuman et al.
6,581,004	B2	6/2003	Mori et al.
6,587,785	B2	7/2003	Stefan et al.
6,594,579	B1	7/2003	Lowrey et al.
6,598,748	B2	7/2003	Mileaf et al.
6,604,033	B1	8/2003	Banet et al.
6,609,051	B2	8/2003	Fiechter et al.
6,611,740	B2	8/2003	Lowrey et al.
6,636,790	B1	10/2003	Lightner et al.
6,651,034	B1	11/2003	Hedlund et al.
6,662,091	B2	12/2003	Wilson et al.
6,675,635	B2	1/2004	Kasen et al.
6,708,926	B2	3/2004	Bonisch
6,732,031	B1	5/2004	Lightner et al.
6,732,063	B2	5/2004	Famili et al.
6,735,504	B2	5/2004	Katagishi et al.
6,735,506	B2	5/2004	Breed et al.
6,738,697	B2	5/2004	Breed
6,741,927	B2	5/2004	Jones
6,741,938	B2	5/2004	Berndorfer
6,748,318	B1	6/2004	Jones
6,754,582	B1	6/2004	Smith et al.
6,763,299	B2	7/2004	Jones

(56) **References Cited**

U.S. PATENT DOCUMENTS

6,775,642	B2	8/2004	Remboski et al.
6,804,606	B2	10/2004	Jones
6,812,888	B2	11/2004	Drury et al.
6,813,559	B1	11/2004	Bodin et al.
6,819,988	B2	11/2004	Dietz et al.
6,840,093	B2	1/2005	Kasen et al.
6,845,939	B1	1/2005	Baldwin
6,847,871	B2	1/2005	Malik et al.
6,850,824	B2	2/2005	Breed
6,857,262	B2	2/2005	Rendahl et al.
6,859,039	B2	2/2005	Horie et al.
6,859,722	B2	2/2005	Jones
6,904,359	B2	6/2005	Jones
6,911,830	B2	6/2005	Heremans et al.
6,920,779	B2	7/2005	Carlstrom et al.
6,937,992	B1	8/2005	Benda et al.
6,947,827	B2	9/2005	Fuse et al.
6,970,183	B1	11/2005	Monroe
6,975,938	B2	12/2005	Odagawa et al.
6,980,885	B2	12/2005	Ye et al.
6,988,026	B2	1/2006	Breed et al.
7,016,774	B2	3/2006	Barber et al.
7,050,897	B2	5/2006	Breed et al.
7,059,566	B2	6/2006	Byers et al.
7,075,421	B1	7/2006	Tuttle
7,082,359	B2	7/2006	Breed
7,089,099	B2	8/2006	Shostak et al.
7,089,110	B2	8/2006	Pechatnikov et al.
7,089,784	B2	8/2006	Jakoby et al.
7,103,460	B1	9/2006	Breed
7,133,804	B2	11/2006	Tonack et al.
7,146,264	B2	12/2006	Bates et al.
7,155,321	B2	12/2006	Bromley et al.
7,197,500	B1	3/2007	Israni et al.
7,212,976	B2	5/2007	Scheer
7,216,037	B2	5/2007	Graulich et al.
7,228,232	B2	6/2007	Bodin et al.
7,231,294	B2	6/2007	Bodin et al.
7,251,612	B1	7/2007	Parker et al.
7,257,396	B2	8/2007	Olsen et al.
7,286,913	B2	10/2007	Bodin et al.
7,295,924	B2	11/2007	Smith et al.
7,299,125	B2	11/2007	Marks et al.
7,313,467	B2	12/2007	Breed et al.
7,317,975	B2	1/2008	Woolford et al.
7,318,043	B1	1/2008	Silver et al.
7,324,666	B2	1/2008	Zoken et al.
7,373,244	B2	5/2008	Kreft
7,376,497	B2	5/2008	Chen
7,378,940	B2	5/2008	Jenney et al.
7,379,800	B2	5/2008	Breed
7,383,125	B2	6/2008	De et al.
7,400,954	B2	7/2008	Sumcad et al.
7,408,453	B1	8/2008	Breed
7,417,547	B2	8/2008	Kennedy
7,418,320	B1	8/2008	Bodin et al.
7,421,321	B2	9/2008	Breed et al.
7,444,210	B2	10/2008	Breed et al.
7,457,693	B2	11/2008	Olsen et al.
7,467,034	B2	12/2008	Breed et al.
7,469,183	B2	12/2008	Bodin et al.
7,480,551	B1	1/2009	Lowrey et al.
7,486,181	B2	2/2009	Olsen et al.
7,527,288	B2	5/2009	Breed
7,555,370	B2	6/2009	Breed et al.
7,573,386	B2	8/2009	Lahiri
7,575,197	B2	8/2009	Mccoskey et al.
7,580,782	B2	8/2009	Breed et al.
7,587,345	B2	9/2009	Mann et al.
7,603,894	B2	10/2009	Breed
7,624,024	B2	11/2009	Levis et al.
7,630,802	B2	12/2009	Breed
7,633,379	B2	12/2009	Jenney et al.
7,643,797	B2	1/2010	Ban et al.
7,650,210	B2	1/2010	Breed
7,657,354	B2	2/2010	Breed et al.
7,660,577	B2	2/2010	Radosta et al.
7,660,666	B2	2/2010	Finn et al.
7,663,502	B2	2/2010	Breed
7,667,604	B2	2/2010	Ebert et al.
7,672,756	B2	3/2010	Breed
7,693,626	B2	4/2010	Breed et al.
7,706,937	B2	4/2010	Hasegawa et al.
7,715,961	B1	5/2010	Kargupta
7,734,390	B2	6/2010	Chen
7,737,857	B2	6/2010	Ebert et al.
7,760,080	B2	7/2010	Breed et al.
7,782,208	B2	8/2010	Kennedy
7,786,864	B1	8/2010	Shostak et al.
7,797,104	B2	9/2010	Finn et al.
7,880,594	B2	2/2011	Breed et al.
7,889,096	B2	2/2011	Breed
7,969,306	B2	6/2011	Ebert et al.
8,036,788	B2	10/2011	Breed
8,108,321	B2	1/2012	Neal et al.
8,131,301	B1	3/2012	Ahmed et al.
8,179,257	B2	5/2012	Allen et al.
8,326,315	B2	12/2012	Phillips et al.
8,386,277	B2	2/2013	Hearnes et al.
8,406,757	B1	3/2013	Singh et al.
8,442,682	B2	5/2013	Wagner
8,447,804	B2	5/2013	Bai et al.
8,510,043	B1	8/2013	Whiton et al.
8,511,606	B1	8/2013	Lutke et al.
8,515,580	B2	8/2013	Taylor et al.
8,571,781	B2	10/2013	Bernstein et al.
8,599,023	B2	12/2013	Leggett et al.
8,639,543	B2	1/2014	Boss et al.
8,645,189	B2	2/2014	Lyle
8,670,933	B2	3/2014	Schenken et al.
8,686,841	B2	4/2014	Macheca et al.
8,738,423	B2	5/2014	Lyle
8,794,564	B2	8/2014	Hutson
8,897,953	B2	11/2014	Olsen et al.
8,899,903	B1	12/2014	Saad et al.
8,909,391	B1	12/2014	Patrick et al.
8,930,044	B1	1/2015	Peeters et al.
8,948,935	B1	2/2015	Peeters et al.
8,950,698	B1	2/2015	Rossi
8,973,814	B2	3/2015	Wilke et al.
8,983,682	B1	3/2015	Patrick et al.
8,989,922	B2	3/2015	Jones et al.
9,004,396	B1	4/2015	Colin et al.
9,051,043	B1	6/2015	Peeters et al.
9,056,676	B1	6/2015	Wang
9,082,100	B2	7/2015	Hurley et al.
9,087,451	B1	7/2015	Jarrell
9,109,904	B2	8/2015	Forstall et al.
9,125,987	B2	9/2015	Levien et al.
9,139,310	B1	9/2015	Wang
9,146,557	B1	9/2015	Ahmed et al.
9,147,173	B2	9/2015	Jones et al.
9,147,260	B2	9/2015	Hampapur et al.
9,164,509	B2	10/2015	Kim et al.
9,170,117	B1	10/2015	Abuelsaad et al.
9,171,340	B2	10/2015	Leggett et al.
9,174,733	B1	11/2015	Cohen et al.
9,174,738	B1	11/2015	Roach et al.
9,205,922	B1	12/2015	Bouwer
9,208,626	B2	12/2015	Davidson
9,211,025	B1	12/2015	Elhawwashy
9,222,781	B2	12/2015	Schenken et al.
9,235,213	B2	1/2016	Villamar
9,244,147	B1	1/2016	Soundararajan et al.
9,245,183	B2	1/2016	Haas et al.
9,254,363	B2	2/2016	Levien et al.
9,256,852	B1	2/2016	Myllymaki
9,260,244	B1	2/2016	Cohn
9,262,929	B1	2/2016	Roy et al.
9,272,743	B2	3/2016	Thielman
9,273,981	B1	3/2016	Downey et al.
9,280,038	B1	3/2016	Pan et al.
9,284,062	B2	3/2016	Wang
9,310,518	B2	4/2016	Haas et al.

(56) **References Cited**

U.S. PATENT DOCUMENTS

9,311,820	B2	4/2016	Batla et al.
9,317,659	B2	4/2016	Balinski et al.
9,321,531	B1	4/2016	Takayama et al.
9,323,895	B2	4/2016	Balinski et al.
9,346,547	B2	5/2016	Patrick et al.
9,354,296	B2	5/2016	Ubhi et al.
9,359,074	B2	6/2016	Ganesh et al.
9,363,008	B2	6/2016	Boss et al.
9,373,136	B2	6/2016	Leggett et al.
9,373,149	B2	6/2016	Abhyanker
9,376,208	B1	6/2016	Gentry
9,377,781	B1	6/2016	Lee et al.
9,384,668	B2	7/2016	Raptopoulos et al.
9,387,927	B2	7/2016	Rischmuller et al.
9,387,928	B1	7/2016	Gentry et al.
9,405,292	B2	8/2016	Nagasawa
9,412,279	B2	8/2016	Kantor et al.
9,412,280	B1	8/2016	Zwillinger et al.
9,420,562	B1	8/2016	Cal et al.
9,421,869	B1	8/2016	Ananthanarayanan et al.
9,421,972	B2	8/2016	Davidsson et al.
9,422,139	B1	8/2016	Bialkowski et al.
9,447,448	B1	9/2016	Kozloski et al.
9,448,562	B1	9/2016	Sirang et al.
9,452,820	B1	9/2016	Wirth
9,454,151	B2	9/2016	Srivastava et al.
9,454,157	B1	9/2016	Hafeez et al.
9,459,620	B1	10/2016	Schaffalitzky
9,459,622	B2	10/2016	Abhyanker
9,460,616	B1	10/2016	Miyahira et al.
9,463,875	B2	10/2016	Abuelsaad et al.
9,466,154	B2	10/2016	Akselrod et al.
9,467,839	B1	10/2016	Nishimura et al.
9,471,062	B1	10/2016	Theobald
9,471,064	B1	10/2016	Boland et al.
9,472,027	B2	10/2016	Akselrod et al.
9,481,458	B2	11/2016	Casado MagañA et al.
9,481,460	B1	11/2016	Kozloski et al.
9,488,979	B1	11/2016	Chambers et al.
9,489,852	B1	11/2016	Chambers et al.
9,494,937	B2	11/2016	Siegel et al.
9,506,771	B2	11/2016	Santilli et al.
9,510,316	B2	11/2016	Skaaksrud
9,513,136	B2	12/2016	Santilli et al.
9,523,986	B1	12/2016	Abebe et al.
9,534,917	B2	1/2017	Abuelsaad et al.
9,545,852	B2	1/2017	Streett
9,561,852	B1	2/2017	Beaman et al.
9,567,081	B1	2/2017	Beckman et al.
9,576,482	B2	2/2017	Yamamoto
9,582,719	B2	2/2017	Haas et al.
9,584,977	B2	2/2017	Yamamoto
9,593,806	B2	3/2017	Allen et al.
9,600,997	B1	3/2017	Abrahams et al.
9,613,274	B2	4/2017	Stevens et al.
9,623,969	B2	4/2017	Nelson
9,629,161	B2	4/2017	Hopkins et al.
9,637,233	B2	5/2017	Bivens et al.
9,646,493	B2	5/2017	Yamamoto
9,651,945	B1	5/2017	Erickson et al.
9,654,928	B2	5/2017	Cai et al.
9,659,502	B1	5/2017	Abebe et al.
9,659,503	B2	5/2017	Gordon et al.
9,665,992	B2	5/2017	Akselrod et al.
9,669,927	B2	6/2017	Hodge et al.
9,699,622	B1	7/2017	Nishimura et al.
9,702,830	B1	7/2017	Akselrod et al.
9,718,564	B1	8/2017	Beckman et al.
9,731,821	B2	8/2017	Hoareau et al.
9,734,684	B2	8/2017	Bryson et al.
9,734,725	B2	8/2017	Gordon et al.
9,773,398	B2	9/2017	Abrahams et al.
9,817,396	B1	11/2017	Takayama et al.
9,928,749	B2	3/2018	Gil et al.
9,957,048	B2	5/2018	Gil
9,969,495	B2	5/2018	Gil
9,981,745	B2	5/2018	Gil
10,131,428	B1	11/2018	Sopper et al.
10,202,192	B2	2/2019	Gil et al.
10,255,577	B1	4/2019	Steves et al.
10,453,022	B2	10/2019	Gil
10,460,281	B2	10/2019	Gil
10,706,382	B2	7/2020	Gil
10,706,384	B1	7/2020	Bolton et al.
10,730,626	B2	8/2020	Gil et al.
10,775,792	B2	9/2020	Cooper
10,796,269	B2	10/2020	Gil et al.
10,860,971	B2	12/2020	Gil et al.
2002/0049535	A1	4/2002	Rigo et al.
2002/0052688	A1	5/2002	Yofu
2002/0165665	A1	11/2002	Kim
2002/0188392	A1	12/2002	Breed et al.
2003/0009270	A1	1/2003	Breed
2003/0020623	A1	1/2003	Cao et al.
2003/0055666	A1	3/2003	Roddy et al.
2003/0065771	A1	4/2003	CrÄmer et al.
2003/0093199	A1	5/2003	Mavreas
2003/0137426	A1	7/2003	Anthony et al.
2003/0208309	A1	11/2003	Triphathi
2003/0216831	A1	11/2003	Hart et al.
2004/0024502	A1	2/2004	Squires et al.
2004/0039509	A1	2/2004	Breed
2004/0044452	A1	3/2004	Bauer et al.
2004/0078125	A1	4/2004	Woodard et al.
2004/0130442	A1	7/2004	Breed et al.
2004/0152485	A1	8/2004	Deeds
2004/0158398	A1	8/2004	Chen et al.
2004/0167689	A1	8/2004	Bromley et al.
2004/0174264	A1	9/2004	Reisman et al.
2004/0176985	A1	9/2004	Lilly et al.
2004/0215382	A1	10/2004	Breed et al.
2004/0243430	A1	12/2004	Horstemeyer
2004/0249519	A1	12/2004	Frink et al.
2005/0038581	A1	2/2005	Kapolka et al.
2005/0051623	A1	3/2005	Okuda et al.
2005/0082421	A1	4/2005	Perlo et al.
2005/0101268	A1	5/2005	Radosta et al.
2005/0107993	A1	5/2005	Cuthbert et al.
2005/0108063	A1	5/2005	Madill et al.
2005/0108102	A1	5/2005	York
2005/0125117	A1	6/2005	Breed
2005/0137789	A1	6/2005	Furukawa
2005/0192727	A1	9/2005	Shostak et al.
2005/0222723	A1	10/2005	Estes et al.
2005/0273218	A1	12/2005	Breed et al.
2006/0015503	A1	1/2006	Simons et al.
2006/0025897	A1	2/2006	Shostak et al.
2006/0031042	A1	2/2006	Ogura et al.
2006/0055564	A1	3/2006	Olsen et al.
2006/0069473	A1	3/2006	Sumcad et al.
2006/0136301	A1	6/2006	Grovit
2006/0142934	A1	6/2006	Kim
2006/0180371	A1	8/2006	Breed et al.
2006/0212193	A1	9/2006	Breed
2006/0212194	A1	9/2006	Breed
2006/0235739	A1	10/2006	Levis et al.
2006/0243043	A1	11/2006	Breed
2006/0244581	A1	11/2006	Breed et al.
2006/0270421	A1	11/2006	Phillips et al.
2006/0271246	A1	11/2006	Bell et al.
2006/0284839	A1	12/2006	Breed et al.
2007/0005202	A1	1/2007	Breed
2007/0057781	A1	3/2007	Breed
2007/0060084	A1	3/2007	Thompson et al.
2007/0075919	A1	4/2007	Breed
2007/0096565	A1	5/2007	Breed et al.
2007/0103284	A1	5/2007	Chew et al.
2007/0124040	A1	5/2007	Chen
2007/0126561	A1	6/2007	Breed
2007/0139216	A1	6/2007	Breed
2007/0156312	A1	7/2007	Breed et al.
2007/0173991	A1	7/2007	Tenzer et al.
2007/0174004	A1	7/2007	Tenzer et al.
2007/0205881	A1	9/2007	Breed

(56) **References Cited**

U.S. PATENT DOCUMENTS

2007/0239346 A1 10/2007 Hawkins et al.
2007/0250264 A1 10/2007 Sekine et al.
2007/0271014 A1 11/2007 Breed
2007/0299587 A1 12/2007 Breed et al.
2008/0004764 A1 1/2008 Chinnadurai et al.
2008/0004966 A1 1/2008 Singleton et al.
2008/0021604 A1 1/2008 Bouvier et al.
2008/0021642 A1 1/2008 Furukawa
2008/0032666 A1 2/2008 Hughes et al.
2008/0040005 A1 2/2008 Breed
2008/0042410 A1 2/2008 Breed et al.
2008/0046149 A1 2/2008 Breed
2008/0065290 A1 3/2008 Breed et al.
2008/0086240 A1 4/2008 Breed
2008/0114502 A1 5/2008 Breed et al.
2008/0129475 A1 6/2008 Breed et al.
2008/0140278 A1 6/2008 Breed
2008/0147265 A1 6/2008 Breed
2008/0147271 A1 6/2008 Breed
2008/0154458 A1 6/2008 Brandstetter et al.
2008/0161989 A1 7/2008 Breed
2008/0162034 A1 7/2008 Breen
2008/0174485 A1 7/2008 Carani et al.
2008/0214235 A1 9/2008 Sagou et al.
2008/0216567 A1 9/2008 Breed
2008/0221776 A1 9/2008 Mcclellan
2008/0284575 A1 11/2008 Breed
2008/0291022 A1 11/2008 Amador et al.
2009/0030999 A1 1/2009 Gatzke et al.
2009/0043441 A1 2/2009 Breed
2009/0051566 A1 2/2009 Olsen et al.
2009/0055045 A1 2/2009 Biswas et al.
2009/0100031 A1 4/2009 Gilligan et al.
2009/0102638 A1 4/2009 Olsen et al.
2009/0177553 A1 7/2009 Short et al.
2009/0191849 A1 7/2009 Fioretti et al.
2009/0197584 A1 8/2009 Snow et al.
2009/0232358 A1 9/2009 Cross
2009/0243925 A1 10/2009 Kellermeier et al.
2009/0259358 A1 10/2009 Andreasen
2009/0271722 A1 10/2009 Park
2010/0009712 A1 1/2010 Kodama
2010/0023203 A1 1/2010 Shibi
2010/0030466 A1 2/2010 Rogers et al.
2010/0030653 A1 2/2010 Westphal
2010/0094688 A1 4/2010 Olsen et al.
2010/0094769 A1 4/2010 Davidson et al.
2010/0100315 A1 4/2010 Davidson et al.
2010/0100507 A1 4/2010 Davidson et al.
2010/0138701 A1 6/2010 Costantino
2010/0148947 A1 6/2010 Morgan et al.
2010/0174446 A1 7/2010 Andreasen et al.
2010/0207754 A1 8/2010 Shostak et al.
2010/0217480 A1 8/2010 Link
2010/0289644 A1 11/2010 Slavin et al.
2011/0025496 A1 2/2011 Cova et al.
2011/0084162 A1 4/2011 Goossen et al.
2011/0106362 A1 5/2011 Seitz
2011/0118932 A1 5/2011 Singh et al.
2011/0153645 A1 6/2011 Hoover et al.
2011/0224898 A1 9/2011 Scofield et al.
2011/0238593 A1 9/2011 Hearnes et al.
2011/0294521 A1 12/2011 Freathy et al.
2012/0030133 A1 2/2012 Rademaker
2012/0091259 A1 4/2012 Morris et al.
2012/0104151 A1 5/2012 Mccann
2012/0136743 A1 5/2012 Mcquade et al.
2012/0154579 A1 6/2012 Hampapur et al.
2012/0232743 A1 9/2012 Singh
2012/0239243 A1 9/2012 Medwin et al.
2012/0253548 A1 10/2012 Davidson
2012/0257519 A1 10/2012 Frank et al.
2013/0059626 A1 3/2013 Hopkins et al.
2013/0124363 A1 5/2013 Hearnes et al.
2013/0231130 A1 9/2013 Cherian et al.
2013/0240673 A1 9/2013 Bacon et al.
2013/0304349 A1 11/2013 Davidson
2013/0325320 A1 12/2013 Dimitriadis
2013/0331127 A1 12/2013 Sabatelli et al.
2013/0345961 A1 12/2013 Leader et al.
2014/0032034 A1 1/2014 Raptopoulos et al.
2014/0061376 A1 3/2014 Fisher et al.
2014/0110527 A1 4/2014 Sing
2014/0121959 A1 5/2014 Hurley et al.
2014/0128103 A1 5/2014 Joao et al.
2014/0129059 A1 5/2014 Scarlatti et al.
2014/0143171 A1 5/2014 Hurley et al.
2014/0149244 A1 5/2014 Abhyanker
2014/0150806 A1 6/2014 Hu et al.
2014/0172194 A1 6/2014 Levien et al.
2014/0180914 A1 6/2014 Abhyanker
2014/0192667 A1 7/2014 Kalapatapu et al.
2014/0192737 A1 7/2014 Belghoul et al.
2014/0206400 A1 7/2014 De Vries
2014/0217230 A1 8/2014 Helou, Jr.
2014/0254896 A1 9/2014 Zhou et al.
2014/0280865 A1 9/2014 Albertson et al.
2014/0316243 A1 10/2014 Niedermeyer
2014/0358437 A1 12/2014 Fletcher
2014/0372025 A1 12/2014 Yoshida
2015/0006005 A1 1/2015 Yu et al.
2015/0012154 A1 1/2015 Senkel et al.
2015/0081587 A1 3/2015 Gillen
2015/0120094 A1 4/2015 Kimchi et al.
2015/0154540 A1 6/2015 Skaaksrud
2015/0154559 A1 6/2015 Barbush et al.
2015/0158599 A1 6/2015 Sisko
2015/0178649 A1 6/2015 Furman et al.
2015/0183528 A1 7/2015 Walsh et al.
2015/0189655 A1 7/2015 Hopkins et al.
2015/0259078 A1 9/2015 Filipovic et al.
2015/0284076 A1 10/2015 Cacciaguera
2015/0284079 A1 10/2015 Matsuda
2015/0286216 A1 10/2015 Miwa
2015/0305077 A1 10/2015 Johnsson et al.
2015/0307191 A1 10/2015 Samuel et al.
2015/0323932 A1 11/2015 Paduano et al.
2015/0336667 A1 11/2015 Ubhi et al.
2015/0360777 A1 12/2015 Mottale
2015/0363843 A1 12/2015 Loppatto et al.
2015/0370251 A1 12/2015 Barfield et al.
2015/0375398 A1 12/2015 Penn et al.
2016/0003637 A1 1/2016 Andersen
2016/0009392 A1 1/2016 Korhonen et al.
2016/0011592 A1 1/2016 Zhang et al.
2016/0016652 A1 1/2016 Barrett et al.
2016/0016664 A1 1/2016 Basuni
2016/0023743 A1 1/2016 Barrett et al.
2016/0027307 A1 1/2016 Abhyanker et al.
2016/0027314 A1 1/2016 Stathis
2016/0033966 A1 2/2016 Farris et al.
2016/0039541 A1 2/2016 Beardsley et al.
2016/0068264 A1 3/2016 Ganesh et al.
2016/0068265 A1 3/2016 Hoareau et al.
2016/0083110 A1 3/2016 Pan et al.
2016/0086494 A1 3/2016 Anandayuvaraj et al.
2016/0096622 A1 4/2016 Richardson
2016/0101874 A1 4/2016 Mckinnon et al.
2016/0107750 A1 4/2016 Yates
2016/0114887 A1 4/2016 Zhou et al.
2016/0115702 A1 4/2016 Nordbruch et al.
2016/0130000 A1 5/2016 Rimanelli
2016/0137293 A1 5/2016 Santangelo
2016/0137304 A1 5/2016 Phan et al.
2016/0137311 A1 5/2016 Peverill et al.
2016/0140496 A1 5/2016 Simms et al.
2016/0140851 A1 5/2016 Levy et al.
2016/0144734 A1 5/2016 Wang et al.
2016/0144982 A1 5/2016 Sugumaran
2016/0157653 A1 6/2016 Manitta
2016/0159472 A1 6/2016 Chan et al.
2016/0163205 A1 6/2016 Jenkins
2016/0167778 A1 6/2016 Meringer et al.
2016/0178803 A1 6/2016 Haas et al.

(56) **References Cited**

U.S. PATENT DOCUMENTS

2016/0185466	A1	6/2016	Dreano, Jr.
2016/0189101	A1	6/2016	Kantor et al.
2016/0189549	A1	6/2016	Marcus
2016/0191142	A1	6/2016	Boss et al.
2016/0196756	A1	7/2016	Prakash et al.
2016/0200207	A1	7/2016	Lee et al.
2016/0200438	A1	7/2016	Bokeno et al.
2016/0207627	A1	7/2016	Hoareau et al.
2016/0209839	A1	7/2016	Hoareau et al.
2016/0214713	A1	7/2016	Cragg
2016/0214714	A1	7/2016	Sekelsky
2016/0214717	A1	7/2016	De Silva
2016/0221186	A1	8/2016	Perrone
2016/0221683	A1	8/2016	Roberts et al.
2016/0225263	A1	8/2016	Salentiny et al.
2016/0229299	A1	8/2016	Streett
2016/0229534	A1	8/2016	Hutson
2016/0239798	A1	8/2016	Borley et al.
2016/0244162	A1	8/2016	Weller
2016/0244187	A1	8/2016	Byers et al.
2016/0253908	A1	9/2016	Chambers et al.
2016/0257401	A1	9/2016	Buchmueller et al.
2016/0257423	A1	9/2016	Martin
2016/0257424	A1	9/2016	Stabler et al.
2016/0257426	A1	9/2016	Mozer
2016/0272308	A1	9/2016	Gentry
2016/0272312	A1	9/2016	Mallard
2016/0272316	A1	9/2016	Nelson
2016/0280075	A1	9/2016	Mccrady
2016/0280371	A1	9/2016	Canavor et al.
2016/0297521	A1	10/2016	Cheatham et al.
2016/0300493	A1	10/2016	Ubhi et al.
2016/0300496	A1	10/2016	Cheatham et al.
2016/0304198	A1	10/2016	Jourdan
2016/0304217	A1	10/2016	Fisher et al.
2016/0306355	A1	10/2016	Gordon et al.
2016/0307449	A1	10/2016	Gordon et al.
2016/0311529	A1	10/2016	Brotherton-ratcliffe et al.
2016/0320773	A1	11/2016	Skaaksrud
2016/0325835	A1	11/2016	Abuelsaad et al.
2016/0364989	A1	12/2016	Speasl et al.
2016/0376004	A1	12/2016	Claridge et al.
2017/0025022	A1	1/2017	Henry et al.
2017/0081043	A1	3/2017	Jones et al.
2017/0084159	A1	3/2017	Cai et al.
2017/0096222	A1	4/2017	Spinelli et al.
2017/0121023	A1	5/2017	High et al.
2017/0129603	A1	5/2017	Raptopoulos et al.
2017/0132558	A1	5/2017	Perez
2017/0132562	A1	5/2017	High et al.
2017/0140655	A1	5/2017	Erickson et al.
2017/0160752	A1	6/2017	Boland et al.
2017/0176194	A1	6/2017	Gordon et al.
2017/0178500	A1	6/2017	Miyahira et al.
2017/0178501	A1	6/2017	Miyahira et al.
2017/0188545	A1	7/2017	Bivens et al.
2017/0190422	A1	7/2017	Beaman et al.
2017/0213084	A1	7/2017	Akselrod et al.
2017/0213455	A1	7/2017	Yamamoto
2017/0280678	A1	10/2017	Jones et al.
2017/0308850	A1	10/2017	Roush et al.
2017/0313421	A1	11/2017	Gil
2017/0313422	A1	11/2017	Gil
2017/0316375	A1	11/2017	Gil
2017/0316376	A1	11/2017	Cooper
2017/0316699	A1	11/2017	Gil et al.
2017/0316701	A1	11/2017	Gil et al.
2017/0337510	A1	11/2017	Shroff et al.
2017/0337511	A1	11/2017	Shroff et al.
2018/0111683	A1	4/2018	Di Benedetto et al.
2018/0130017	A1	5/2018	Gupte
2018/0134388	A1	5/2018	Gil
2018/0155027	A1	6/2018	Gil
2018/0155028	A1	6/2018	Gil
2018/0155029	A1	6/2018	Gil
2018/0155030	A1	6/2018	Gil
2018/0155031	A1	6/2018	Gil
2018/0155032	A1	6/2018	Gil et al.
2018/0349840	A1	12/2018	Gil et al.
2018/0356823	A1	12/2018	Cooper
2019/0122172	A1	4/2019	Gil et al.
2019/0161190	A1	5/2019	Gil et al.
2019/0303986	A1	10/2019	Hearnes et al.
2020/0283032	A1	9/2020	Beckman et al.
2020/0333785	A1	10/2020	Cooper

FOREIGN PATENT DOCUMENTS

CN	102642620	A	8/2012
CN	103507955	A	1/2014
CN	105068545	A	11/2015
KR	20-0415083	Y1	4/2006
WO	2015/076886	A2	5/2015

OTHER PUBLICATIONS

Davidson et al., U.S. Appl. No. 14/335,472, filed Jul. 18, 2014, titled "Systems and Methods for Service Notifications", 63 pages.

European Search Report and Search Opinion received for European Application No. 10784919.2, mailed on Aug. 23, 2013, 7 pages.

International Preliminary Report on Patentability received for PCT Patent Application No. PCT/US2010/057322, mailed on May 8, 2012, 3 pages.

International Preliminary Report on Patentability received for PCT Patent Application No. PCT/US2017/030127, mailed on Nov. 8, 2018, 13 pages.

International Preliminary Report on Patentability received for PCT Patent Application No. PCT/US2017/030149, mailed on Nov. 8, 2018, 18 pages.

International Preliminary Report on Patentability received for PCT Patent Application No. PCT/US2017/030157, mailed on Nov. 8, 2018, 15 pages.

International Search Report and Written Opinion received for PCT Patent Application No. PCT/US2010/057322, mailed on Sep. 12, 2011, 7ages.

International Search Report and Written Opinion received for PCT Patent Application No. PCT/US2017/030127, mailed on Jan. 10, 2018, 18 pages.

International Search Roport and Written Opinion received for PCT Patent Application No. PCT/US2017/030149, mailed on Jan. 22, 2018, 19 pages.

International Search Report and Written Opinion received for PCT Patent Application No. PCT/US2017/030157, mailed on Mar. 6, 2018, 21 pages.

International Search Report and Written Opinion received for PCT Patent Application No. PCT/US2018/052628, mailed on Nov. 15, 2018, 12 pages.

Office of Diversion Control, "Chemical Program: Knowing Your Customer Suspicious Orders Reporting," U.S. Department of Justice, Drug Enforcement Administration, accessed on Jul. 1, 2010. 4 pages, <http://www.deadiversion.usdoj.gov/chem_prog/susp.htm>.

Pharmaceutical Commerce, Cardinal Health Builds Out its 'Suspicious Order Monitoring Program', Settlement with DEA Results in a Top-to-Bottom Overhaul of Controlled-Substances Handling, Oct. 10, 2008, http://www.pharmaceuticalcommerce.com/frontEnd/main,php?idSection=972.

Suspicious Order Monitoring, Cegedim Dendrite, Available Online at: <http://cegedimdendrite.com/regions/americas/En/RegulatoryCompliance/RegulatoryCompliance>, Jul. 1, 2010, 1 page.

Non-Final Office Action received for U.S. Appl. No. 15/870,166, mailed on Nov. 23, 2022, 15 pages.

Office action received for Canadian Patent Application No. 3176870, mailed on Mar. 20, 2024, 5 pages.

Office action received for Chinese Patent Application No. 202210441704.7, mailed on Dec. 28, 2024, 18 pages (9 pages of Original OA and 9 pages of English Translation).

(56) **References Cited**

OTHER PUBLICATIONS

Office action received for Chinese Patent Application No. 202210781597.2, mailed on Dec. 27, 2024, 7 pages of Original copies only.
Office action received for Chinese Patent Application No. 202210441704.7, mailed on Jul. 11, 2025, 6 pages of Original copy only.
Office action received for Chinese Patent Application No. 202210781597.2, mailed on Jul. 11, 2025, 6 pages of Original copy only.

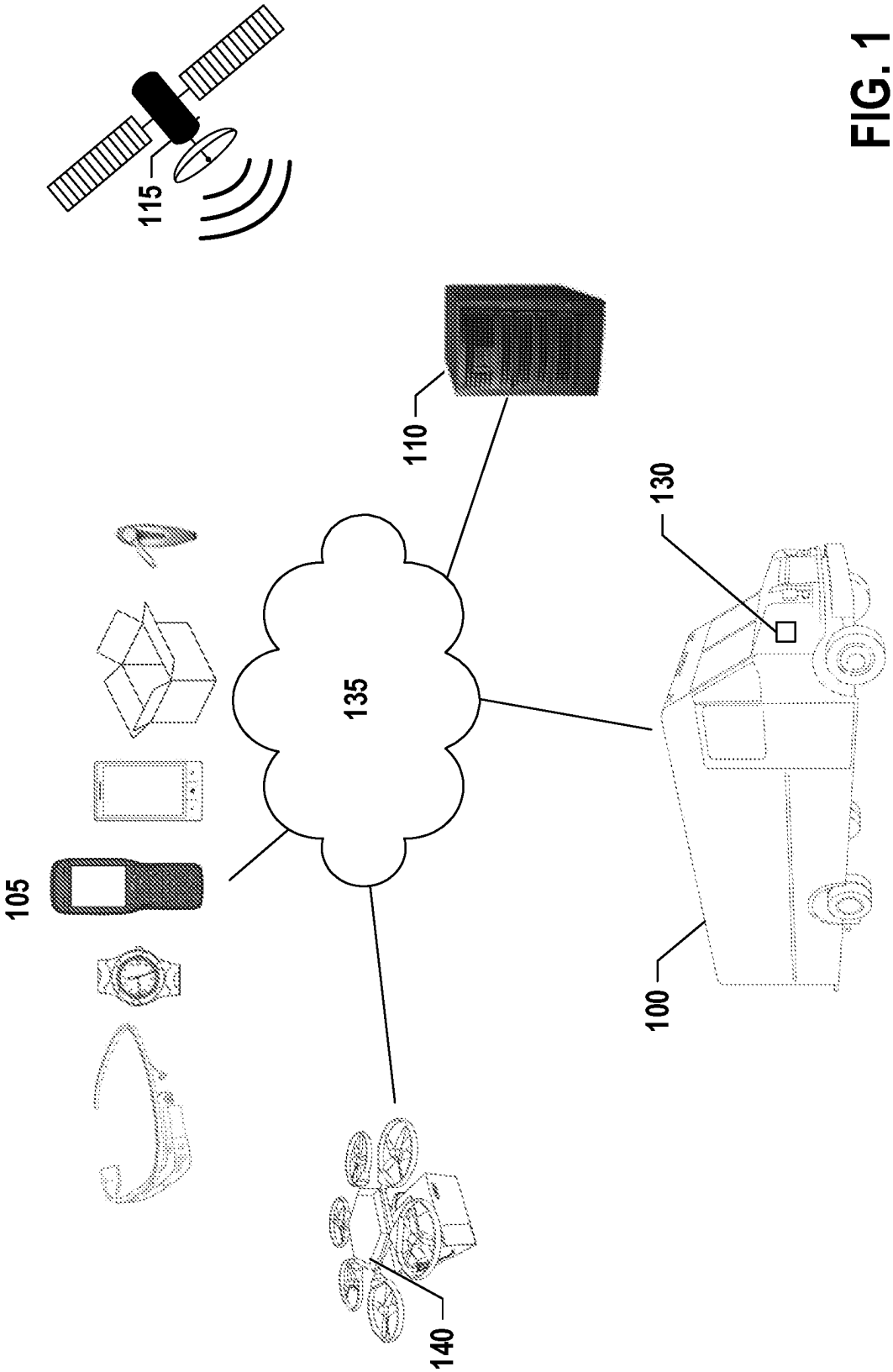

FIG. 1

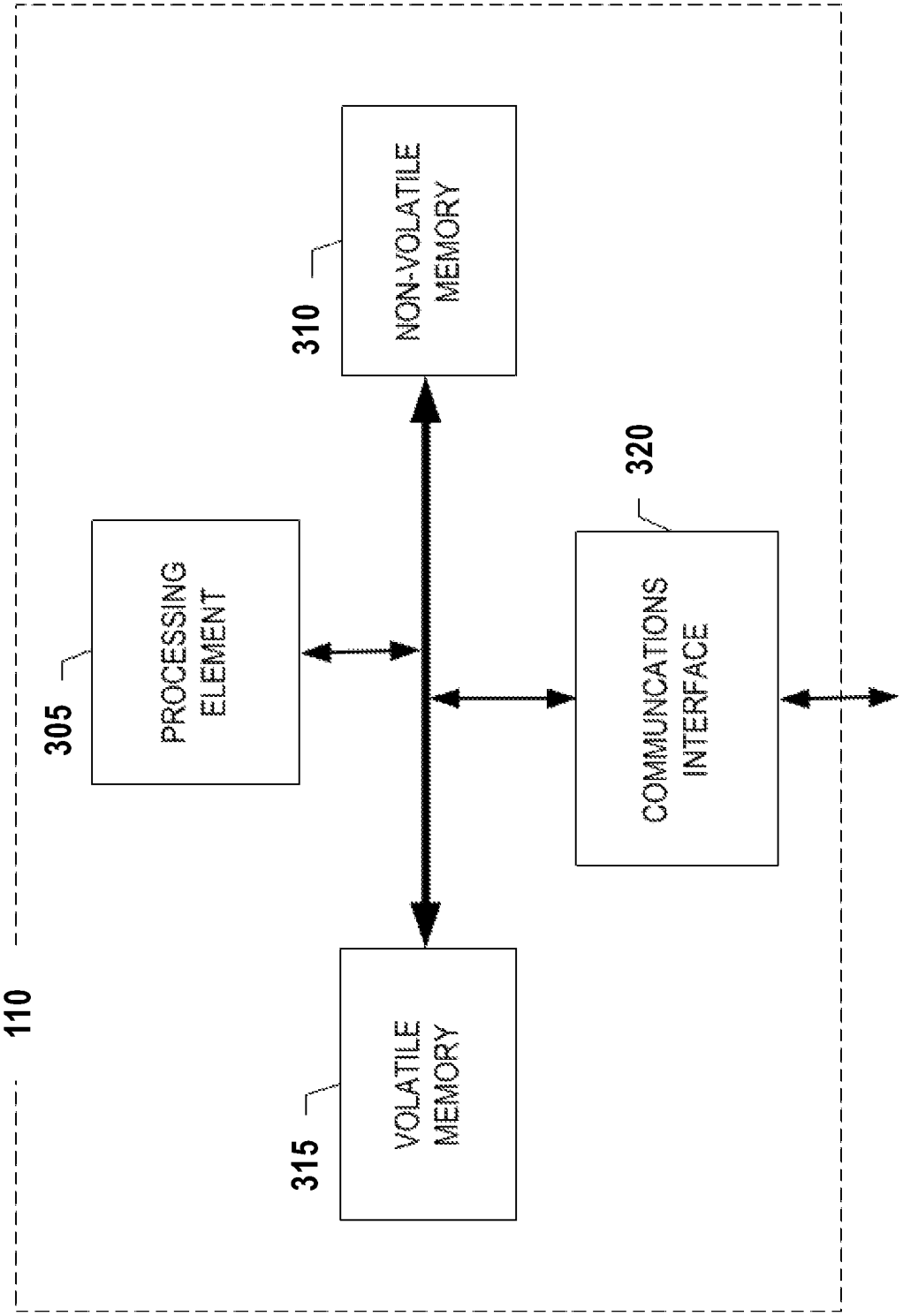
110
305
PROCESSING ELEMENT
310
NON-VOLATILE MEMORY
315
VOLATILE MEMORY
320
COMMUNCATIONS INTERFACE

FIG. 2

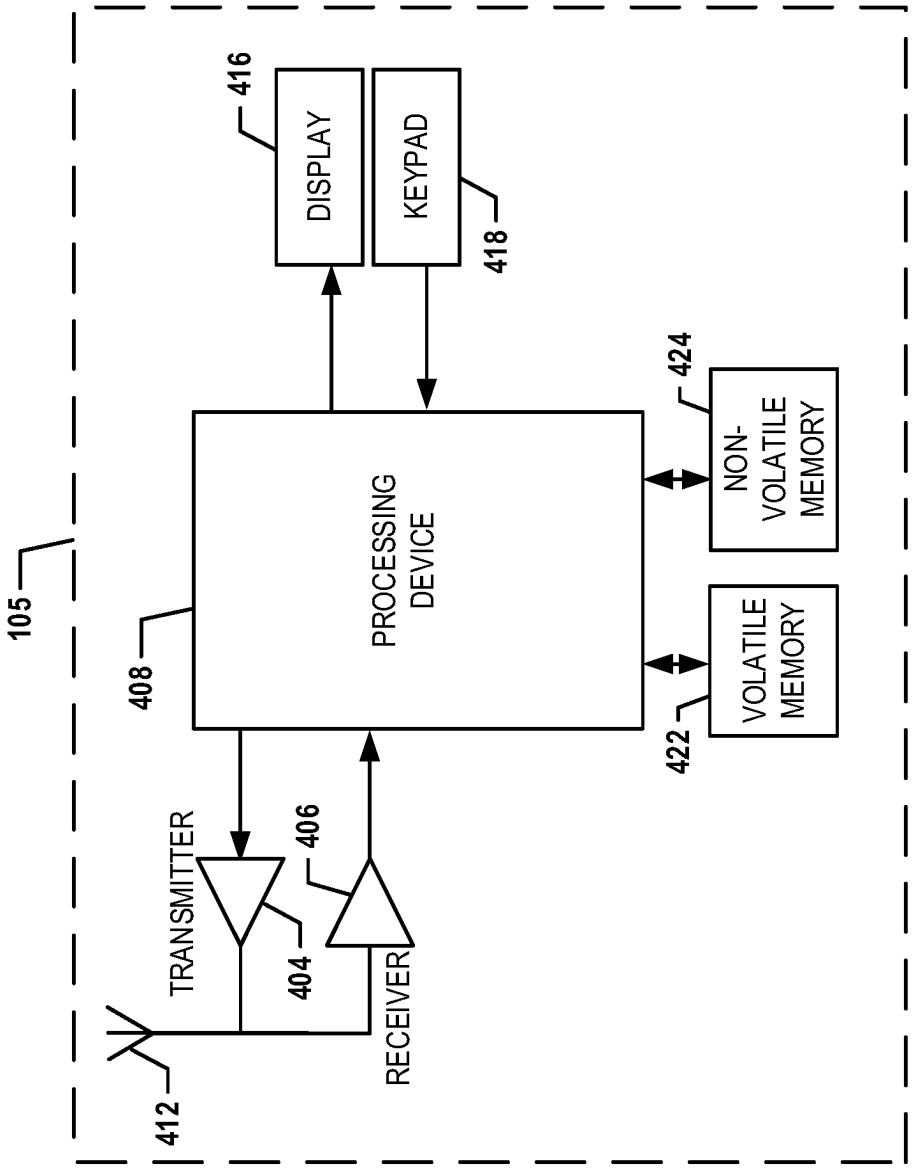
105
408
PROCESSING DEVICE
416
DISPLAY
KEYPAD
418
424
NON-VOLATILE MEMORY
422
VOLATILE MEMORY
TRANSMITTER
404
406
RECEIVER
412

FIG. 3

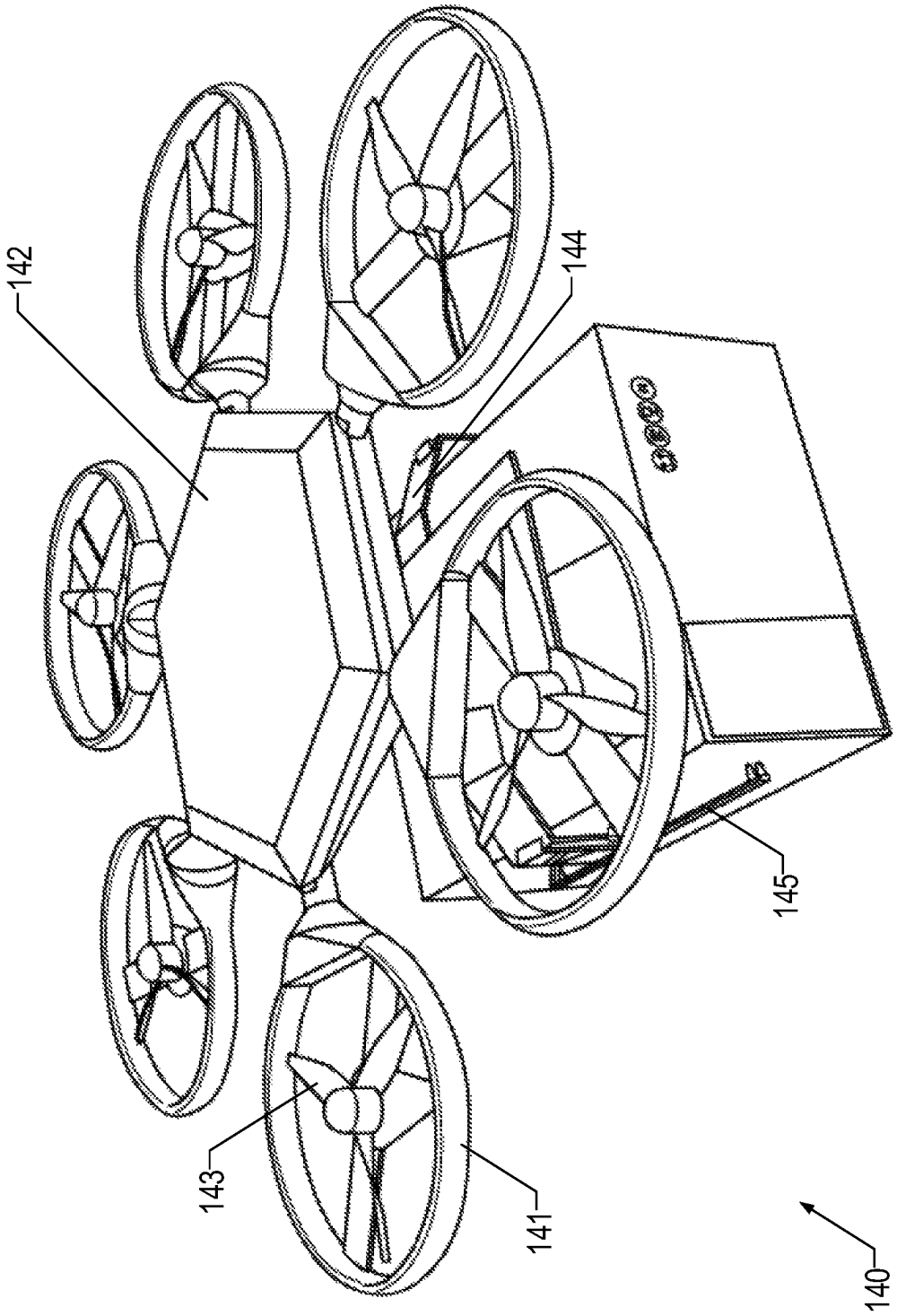

FIG. 4

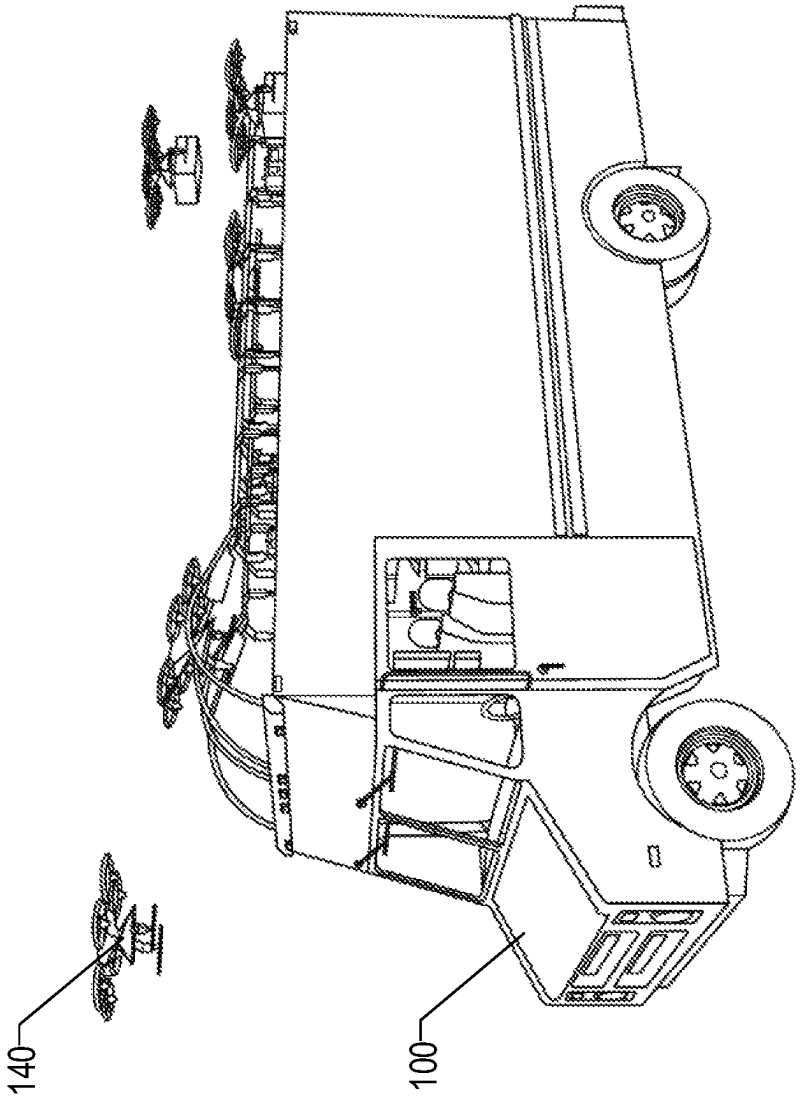

FIG. 5

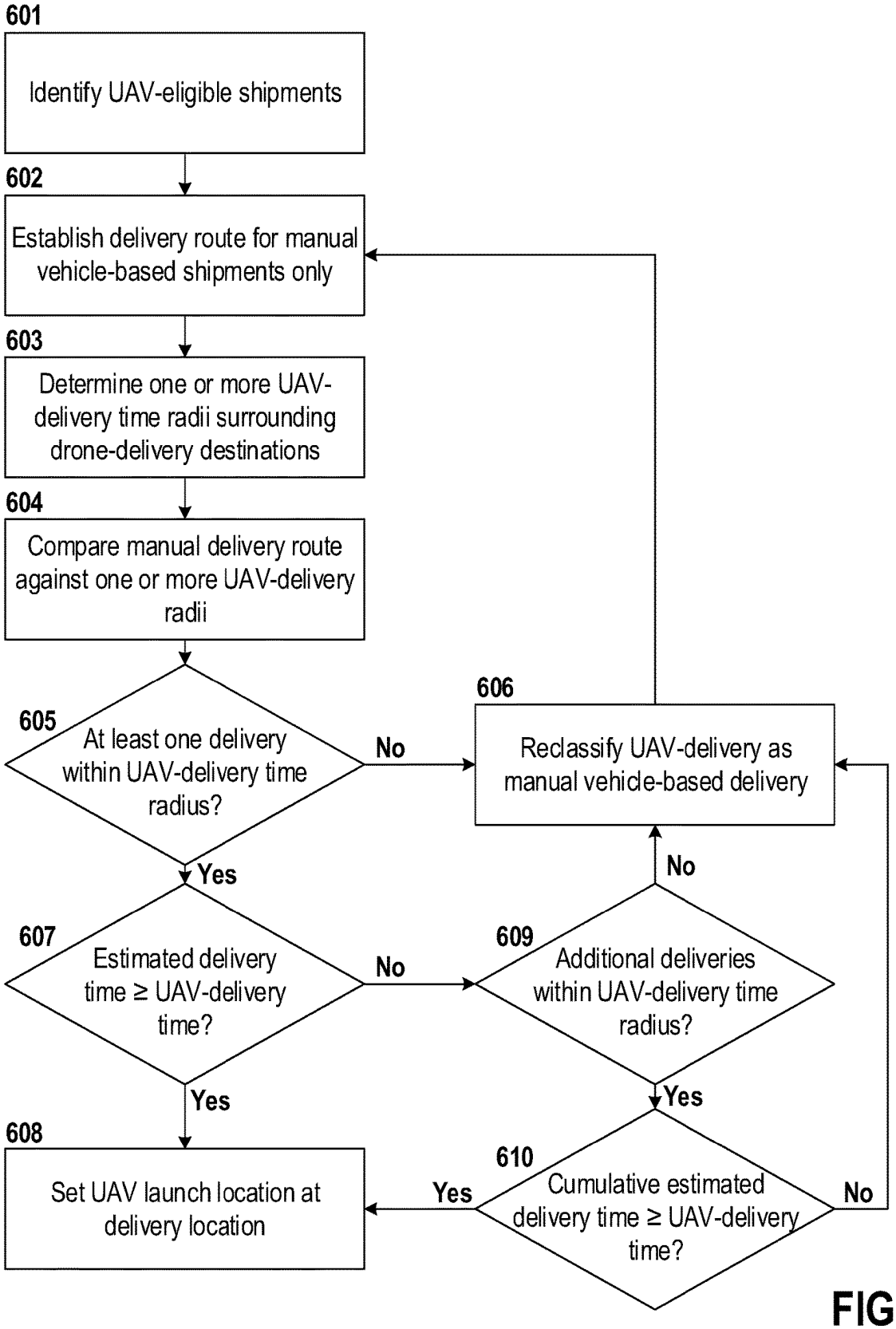
601
Identify UAV-eligible shipments
602
Establish delivery route for manual vehicle-based shipments only
603
Determine one or more UAV-delivery time radii surrounding drone-delivery destinations
604
Compare manual delivery route against one or more UAV-delivery radii
605
At least one delivery within UAV-delivery time radius?
No
606
Reclassify UAV-delivery as manual vehicle-based delivery
Yes
607
Estimated delivery time ≥ UAV-delivery time?
No
609
Additional deliveries within UAV-delivery time radius?
No
Yes
Yes
608
Set UAV launch location at delivery location
Yes
610
Cumulative estimated delivery time ≥ UAV-delivery time?
No

FIG. 6

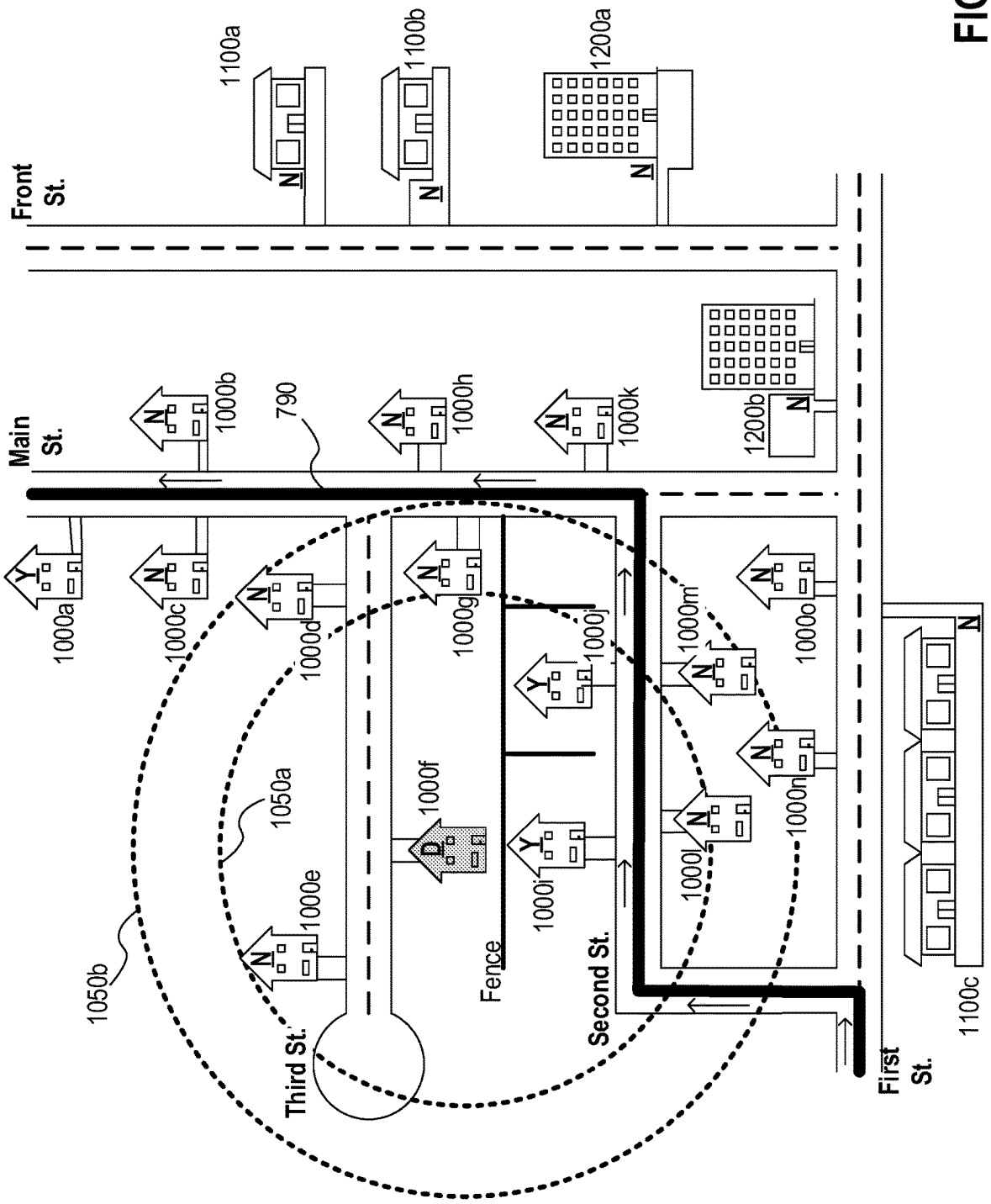
Front St.
Main St.
Third St.
Second St.
First St.
Fence
1100a
1100b
1200a
1200b
1100c
1000a
1000b
1000c
1000d
1000e
1000f
1000g
1000h
1000i
1000j
1000k
1000l
1000m
1000n
1000o
790
1050a
1050b
Y
N
D

FIG. 7

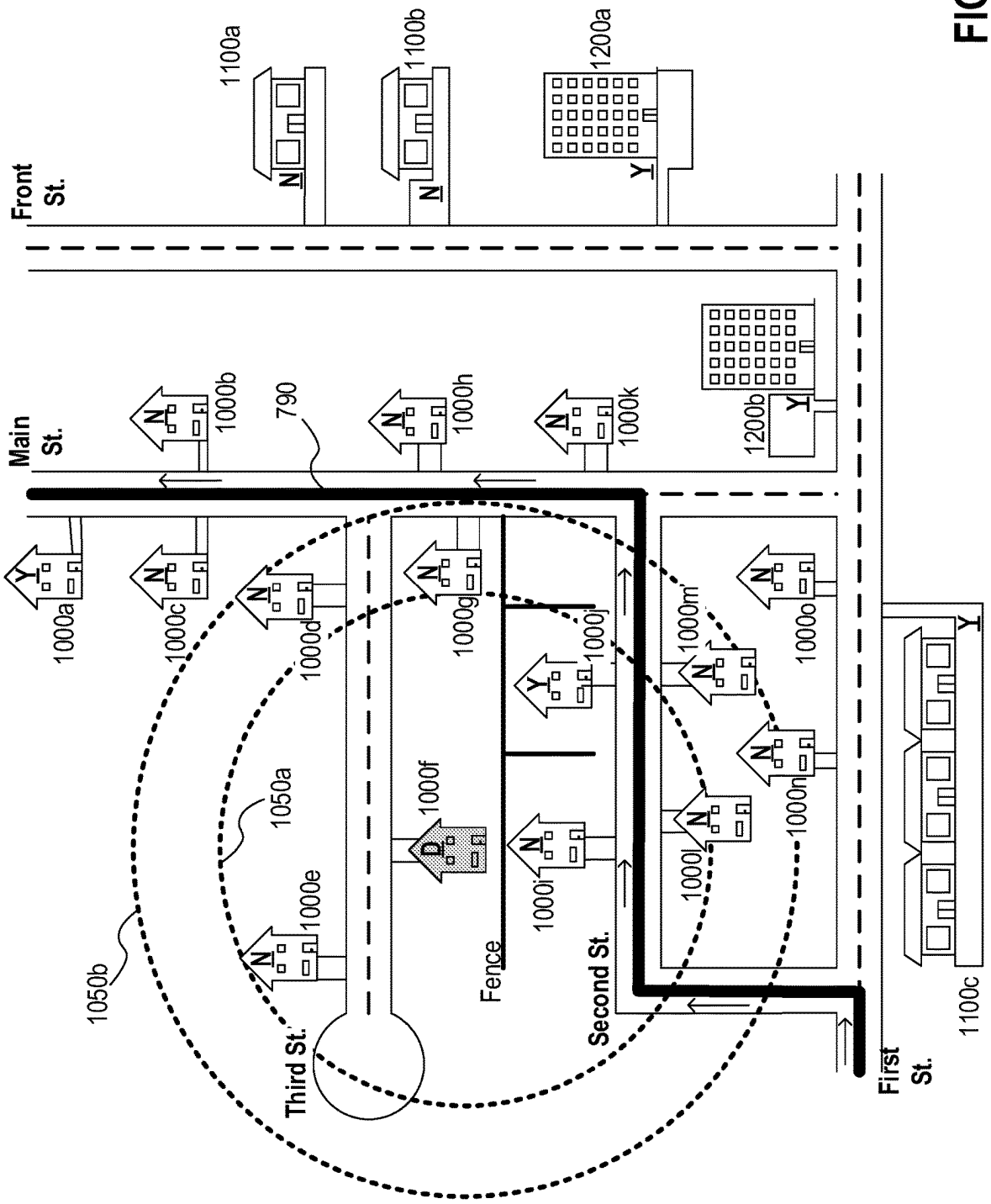
Front St.
Main St.
Third St.
Second St.
First St.
Fence
1100a
1100b
1200a
1200b
1100c
1000a
1000b
1000c
1000d
1000e
1000f
1000g
1000h
1000i
1000j
1000k
1000l
1000m
1000n
1000o
790
1050a
1050b
N
Y
D

FIG. 8

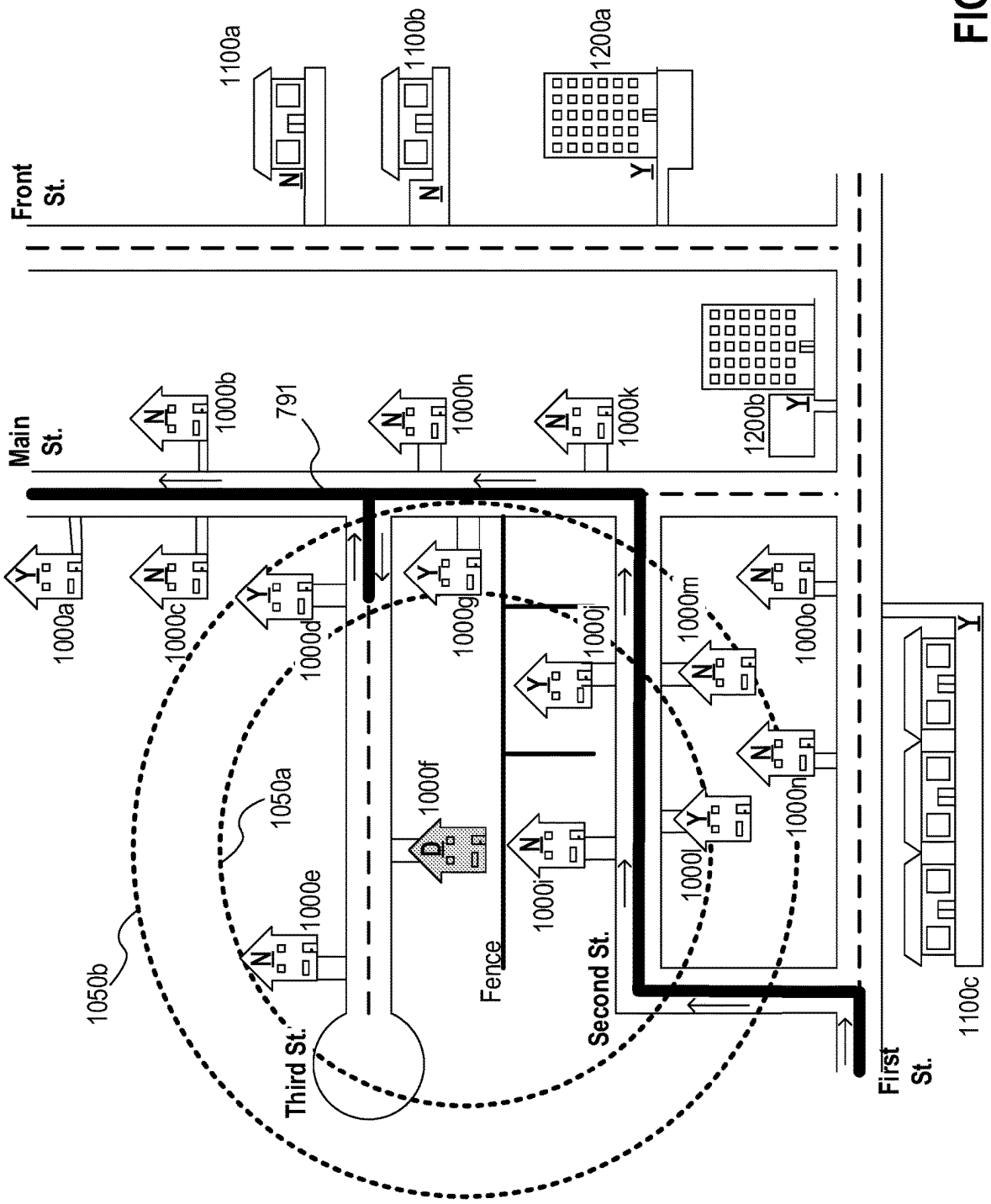
Front St.
Main St.
Third St.
Second St.
First St.
Fence
1100a
1100b
1200a
1200b
1100c
1000a
1000b
1000c
1000d
1000e
1000f
1000g
1000h
1000i
1000j
1000k
1000l
1000m
1000n
1000o
791
1050a
1050b
Y
N
D

FIG. 9

Residence 1000f		
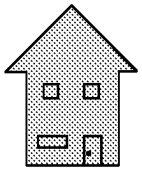	2222 Third Street Anytown, GA 12345	
Manual Deliveries to front porch		
33.786984 N, -84.387657 W (altitude 0 feet)		
Autonomous Deliveries to second story balcony		
33.786953 N, -84.387664 W (altitude 12 feet)		
Serviceable Points within 10 minute autonomous delivery ran		
Serviceable Point ID	*Estimated Delivery Time*	
Residence 1000e	6 minutes	
Residence 1000i	6 minutes	
Residence 1000j	6 minutes	
Serviceable Points within 20 minute autonomous delivery ran		
Serviceable Point ID	*Estimated Delivery Time*	
Residence 1000d	6 minutes	
Residence 1000g	6 minutes	
Residence 1000l	6 minutes	
Residence 1000m	6 minutes	

FIG. 10

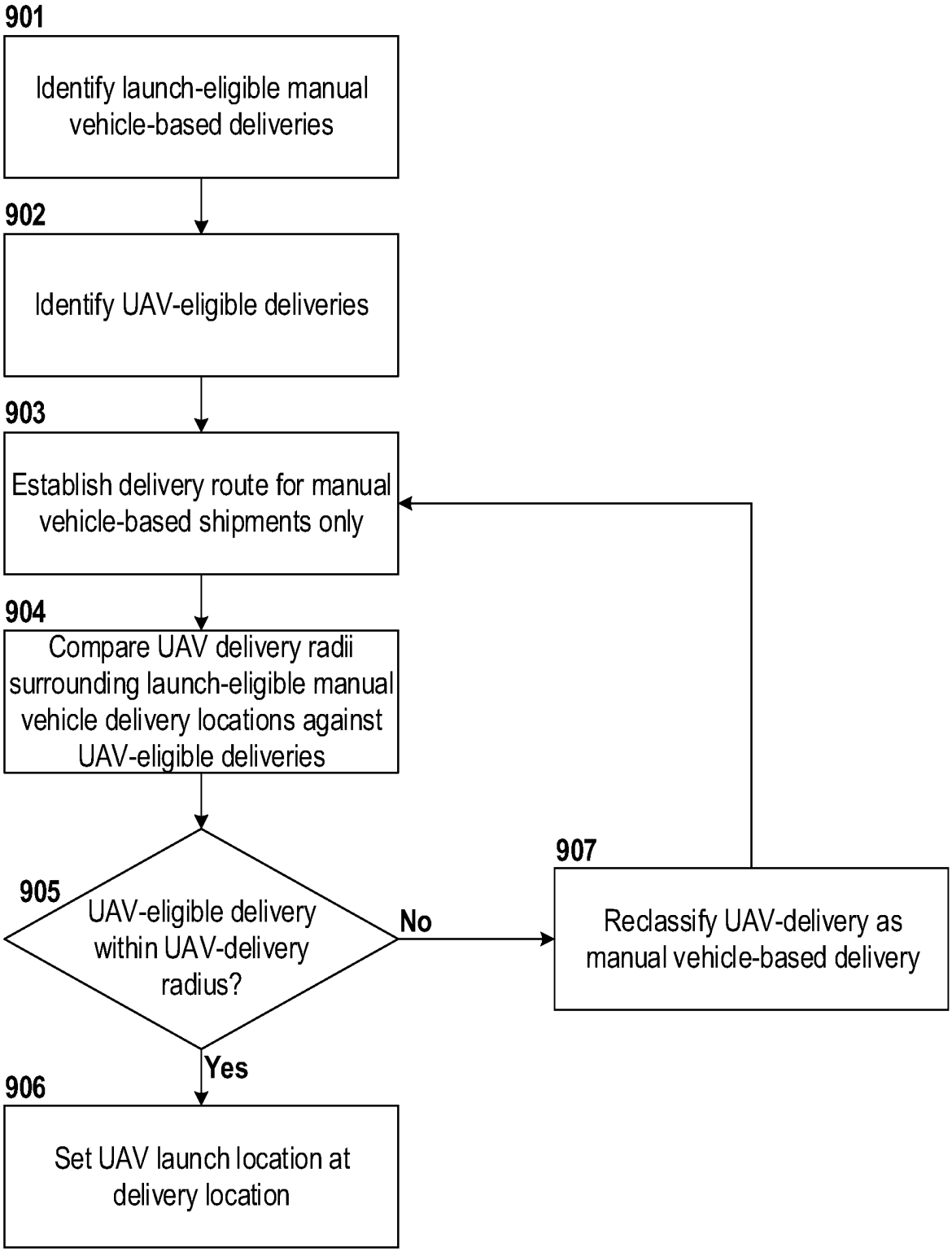
901
Identify launch-eligible manual vehicle-based deliveries
902
Identify UAV-eligible deliveries
903
Establish delivery route for manual vehicle-based shipments only
904
Compare UAV delivery radii surrounding launch-eligible manual vehicle delivery locations against UAV-eligible deliveries
905
UAV-eligible delivery within UAV-delivery radius?
No
907
Reclassify UAV-delivery as manual vehicle-based delivery
Yes
906
Set UAV launch location at delivery location

FIG. 11

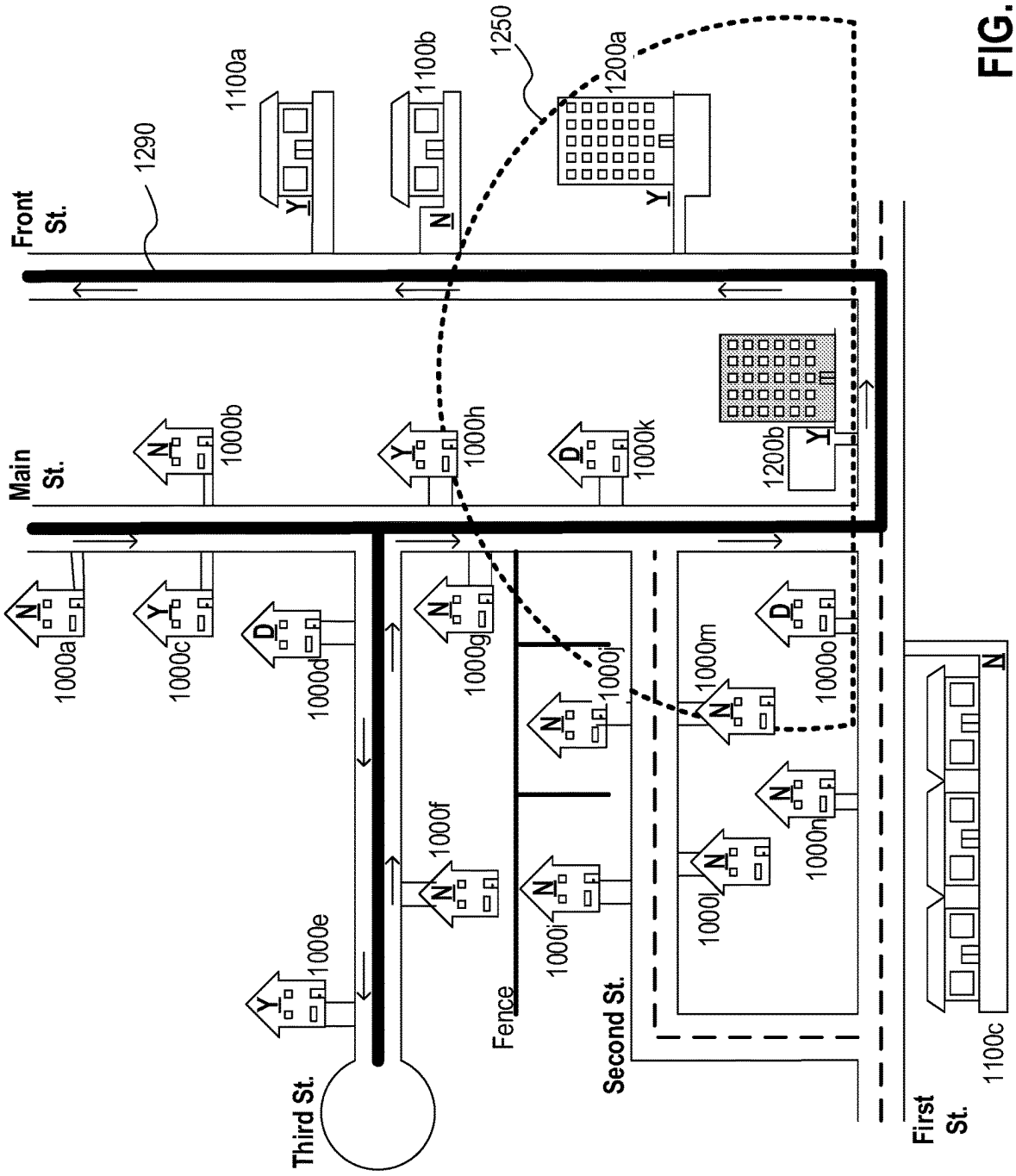
Front St.
Main St.
Third St.
Second St.
First St.
Fence
1290
1250
1100a
1100b
1100c
1200a
1200b
1000a
1000b
1000c
1000d
1000e
1000f
1000g
1000h
1000i
1000j
1000k
1000l
1000m
1000n
1000o
Y
N
D

FIG. 12

Office Building 1200b **Launch Location*	
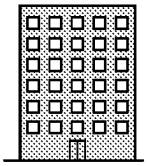	1111 First Street Anytown, GA 12345
Manual Deliveries to Conceirge Desk	
33.785823 N, -84.386534 W (altitude 0 feet)	
Serviceable Points within 10 minute autonomous delivery ran	
Serviceable Point ID	
Residence 1000k	
Residence 1000o	

FIG. 13

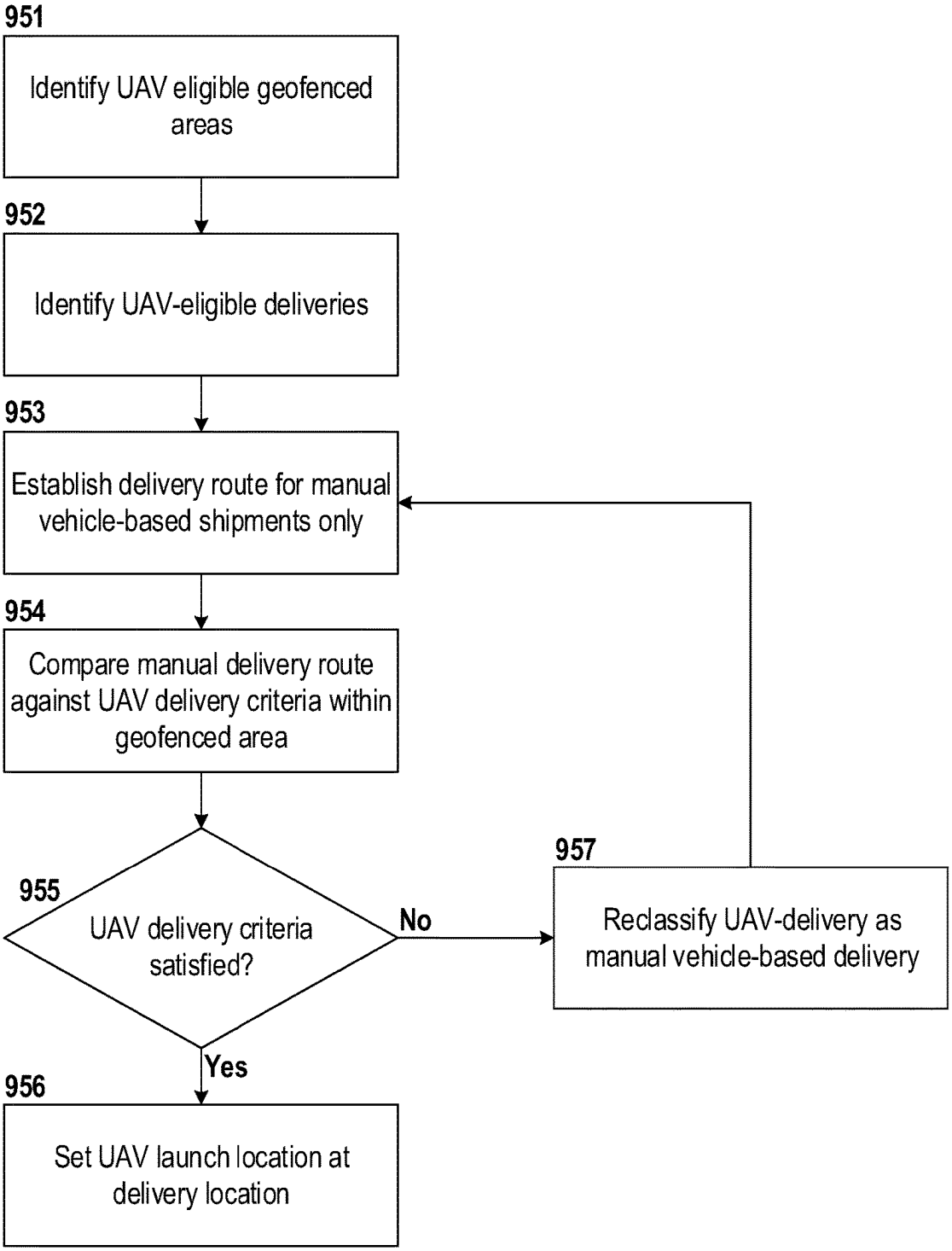
951
Identify UAV eligible geofenced areas
952
Identify UAV-eligible deliveries
953
Establish delivery route for manual vehicle-based shipments only
954
Compare manual delivery route against UAV delivery criteria within geofenced area
955
UAV delivery criteria satisfied?
No
957
Reclassify UAV-delivery as manual vehicle-based delivery
Yes
956
Set UAV launch location at delivery location

FIG. 14

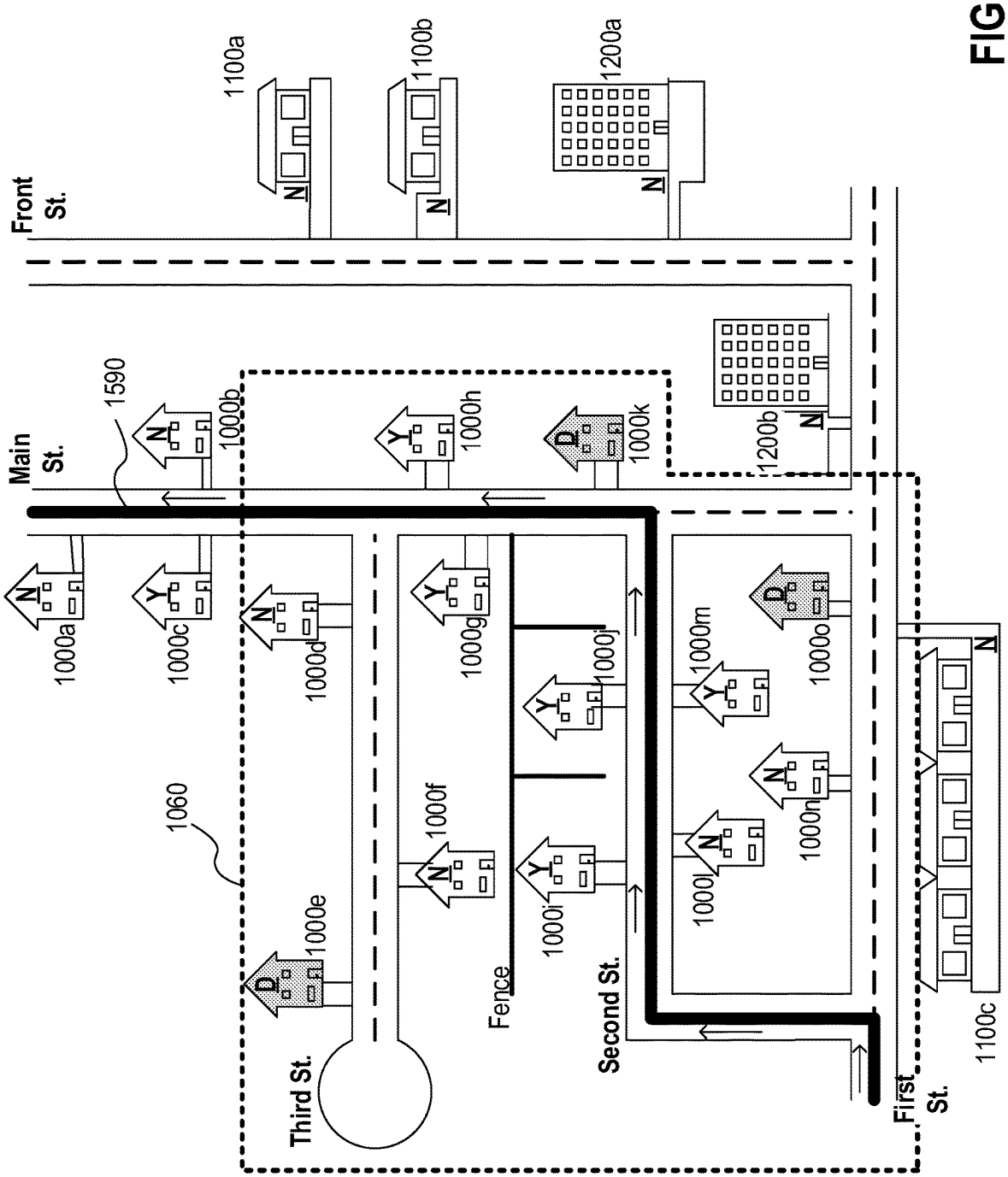
Front St.
Main St.
1590
1060
1100a
1100b
1200a
1200b
1100c
1000a
1000b
1000c
1000d
1000e
1000f
1000g
1000h
1000i
1000j
1000k
1000l
1000m
1000n
1000o
Fence
Third St.
Second St.
First St.
N
Y
D

FIG. 15

Residence 1000i	
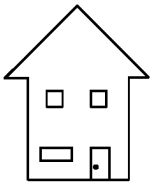	2222 Third Street Anytown, GA 12345
Cluster ID	
Sudden_Valley_12345	
Manual Deliveries to front porch	
33.787044N, -84.387174 (altitude 0 feet)	
Autonomous Deliveries to second story balcony	
33.787044N, -84.387174 (altitude 12 feet)	
Serviceable Points within Common Cluster	
Serviceable Point ID	
Residence 1000d	
Residence 1000e	
Residence 1000f	
Residence 1000g	
Residence 1000h	
Residence 1000j	
Residence 1000k	
Residence 1000l	
Residence 1000m	
Residence 1000n	
Residence 1000o	

FIG. 16

AUTONOMOUSLY DELIVERING ITEMS TO CORRESPONDING DELIVERY LOCATIONS PROXIMATE A DELIVERY ROUTE

RELATED APPLICATION

This patent application claims the benefit of and is a continuation of U.S. patent application Ser. No. 16/921,454, filed Jul. 6, 2020 and entitled "AUTONOMOUSLY DELIVERING ITEMS TO CORRESPONDING DELIVERY LOCATIONS PROXIMATE A DELIVERY ROUTE"; which is a continuation of U.S. patent application Ser. No. 15/621,140, filed Jun. 13, 2017 and entitled "AUTONOMOUSLY DELIVERING ITEMS TO CORRESPONDING DELIVERY LOCATIONS PROXIMATE A DELIVERY ROUTE." These applications are hereby expressly incorporated by reference in their entirety.

BACKGROUND

As autonomous delivery hardware, such as flying delivery drones, becomes more prevalent, the focus of innovation has generally been on the autonomous delivery hardware itself and guidance algorithms for directing autonomous delivery vehicles to intended destinations. Specifically, the autonomous delivery industry has, to date, focused on innovating locomotion mechanisms, power generation and storage devices, lift capacity of the delivery hardware, travel range of the delivery hardware, guidance and obstacle avoidance algorithms, and/or the like.

However, efficient item delivery requires a consideration of other aspects beyond hardware and navigation concerns. For example, selecting an appropriate delivery time and delivery route may significantly impact delivery efficiency, and accordingly additional innovation is needed to enable autonomous vehicles to efficiently deliver items to various locations.

BRIEF SUMMARY

Various embodiments are directed to systems and methods for establishing autonomous delivery vehicle routes based on established manual delivery vehicle routes to enable efficient operation of both manual delivery vehicles and autonomous delivery vehicles. To minimize autonomous vehicle travel distances, the autonomous vehicles may be configured to launch from the manual delivery vehicles as the manual delivery vehicle traverses a pre-established vehicle route. Accordingly, various embodiments are configured to determine optimal launch locations from the manual delivery vehicle to minimize travel distances for the autonomous delivery vehicles and to minimize travel delays to the manual delivery vehicle while the autonomous delivery vehicle is on a delivery assignment.

Various embodiments are directed to an autonomous vehicle item delivery system for autonomously delivering at least one item to a destination location. In certain embodiments, the system comprises: a manual delivery vehicle operable by a vehicle operator, wherein the manual delivery vehicle is configured to traverse an assigned manual delivery vehicle route between a plurality of manual delivery locations; an autonomous delivery vehicle (e.g., an unmanned aerial vehicle) configured for autonomously transporting at least one item between the manual delivery vehicle and an autonomous delivery location; and a computing entity comprising one or more memory storage areas and one or more hardware processors. In certain embodiments, the one or more hardware processors are configured to: receive item data for the at least one item identified for autonomous delivery, wherein the item data identifies an autonomous delivery location for the at least one item; determining, based at least in part on the item data, a launch location along the manual delivery vehicle route for the at least one item; and wherein the autonomous vehicle is configured to depart the manual delivery vehicle at the launch location to deliver the at least one item to the autonomous delivery location.

In certain embodiments, the manual delivery vehicle comprises an onboard computing entity configured to monitor the location of the manual delivery vehicle relative to the launch location, and wherein the onboard computing entity of the manual delivery vehicle is configured to transmit a signal to the autonomous delivery vehicle when the manual delivery vehicle is at least substantially located at the launch location. The launch location may be a manual delivery location for a second item.

Moreover, in certain embodiments, the autonomous delivery vehicle is configured to receive manual delivery vehicle location data indicative of a current location of the manual delivery vehicle; and the autonomous delivery vehicle is configured to, based at least in part on the manual delivery vehicle location data, return to the manual delivery vehicle after completing delivery of the at least one item to the autonomous delivery location.

Certain embodiments are directed to a method for delivering at least one item from a manual delivery vehicle to a destination location via an autonomous delivery vehicle. The method may comprise steps for: receiving, via a computing entity, item data for a plurality of items to be delivered to corresponding delivery locations at least in part via a delivery vehicle; electronically classifying, based at least in part on the item data, each of the plurality of items as one of manual-delivery eligible or autonomous-delivery eligible, wherein manual delivery-eligible items are eligible for final delivery between the delivery vehicle and corresponding manual delivery locations by a delivery vehicle operator and autonomous-delivery eligible items are eligible for final delivery between the delivery vehicle and corresponding autonomous delivery locations by an autonomous vehicle; determining whether at least one autonomous delivery-eligible item satisfies autonomous delivery criteria by: comparing a destination location for the at least one autonomous delivery-eligible item against the delivery locations corresponding to the manual delivery eligible items; and responsive to determining that the autonomous delivery criteria is satisfied: identifying at least one manual delivery location as a launch location for the autonomous vehicle to depart the delivery vehicle for final delivery to the destination location; monitoring the location of the delivery vehicle relative to the launch location; and upon detecting that the delivery vehicle is at the launch location, causing the autonomous vehicle to depart from the delivery vehicle to deliver the at least one autonomous-delivery eligible item to the destination location. Upon determining that the autonomous delivery criteria is not satisfied, certain embodiments comprise steps for reclassifying the at least one autonomous-delivery eligible item to be a manual-delivery eligible item.

In certain embodiments, the autonomous delivery criteria defines a geographical area surrounding the destination location and a minimum presence time that the delivery vehicle must be present within the geographical area. In such embodiments, determining whether the at least one autonomous delivery-eligible item satisfies autonomous delivery criteria comprises: comparing the manual delivery locations

against the geographical area to determine whether one or more of the manual delivery locations are within the geographical area; determining an estimated delivery time for each manual-delivery eligible shipment destined to be delivered to a manual delivery location located within the geographical area; comparing the cumulative estimated delivery time for all manual-delivery eligible shipments destined to be delivered to corresponding manual delivery locations located within the geographical area against the minimum presence time; and responsive to determining that the cumulative estimated delivery time for all manual-delivery eligible shipments destined to be delivered to corresponding manual delivery locations located within the geographical area satisfies the minimum presence time, identifying at least one of the manual delivery locations located within the geographical area to be the launch location. In certain embodiments, determining an estimated delivery time for each manual-delivery eligible shipment comprises: retrieving, from a location database, a location profile for each manual delivery location located within the geographical area; and retrieving, from the location profile corresponding to each manual delivery location located within the geographical area, an estimated delivery time for deliveries to the manual delivery location. In certain embodiments, the cumulative estimated delivery time for all manual-delivery eligible shipments comprises the estimated delivery time for deliveries to each manual delivery location within the geographical area and the estimated travel time for the delivery vehicle to travel between each of the manual delivery locations within the geographical area. In certain embodiments, the delivery criteria defines a first geographical area surrounding the destination location and an associated first minimum presence time, and a second geographical area surrounding the destination location and an associated second minimum presence time, wherein the second geographical area is larger than the first geographical area and the second minimum presence time is longer than the first minimum presence time.

In various embodiments, the autonomous delivery criteria defines a geographical area surrounding a manual delivery location, and determining whether the at least one autonomous delivery-eligible item satisfies autonomous delivery criteria comprises: comparing the at least one autonomous delivery location against the geographical area to determine whether the at least one autonomous delivery location is within the geographical area; and responsive to determining that the autonomous delivery location is within the geographical area, identifying the manual delivery location to be the launch location. In various embodiments, the geographical area is defined based at least in part on a maximum estimated round trip time for an autonomous vehicle to deliver an item to the autonomous delivery location from the manual delivery location.

In various embodiments, the autonomous delivery criteria indicates that autonomous delivery is available to a predefined listing of delivery locations, and determining whether the at least one autonomous delivery-eligible item satisfies autonomous delivery criteria comprises: comparing the at least one autonomous delivery location against the predefined listing of delivery locations; and responsive to determining that the autonomous delivery location matches one of the predefined listings of delivery locations, identifying a manual delivery location to be the launch location. In various embodiments, the predefined listing of delivery locations is identified based at least in part on one or more manual delivery locations for one or more of the manual-delivery eligible items.

In certain embodiments, the item data identifies one or more item attributes for the corresponding item, and identifying one or more items as autonomous-delivery eligible comprises: comparing the one or more item attributes against autonomous-delivery eligibility criteria; wherein the autonomous-delivery eligibility criteria defines at least one of: a maximum item size, a maximum item weight, a maximum item value, one or more excluded item contents, a consignee approval requirement, or a delivery location requirement. Moreover, in certain embodiments the method further comprises steps for monitoring the location of the autonomous vehicle while the autonomous vehicle delivers the at least one autonomous-delivery eligible item from the delivery vehicle to the destination location; and upon detecting that the delivery vehicle begins moving before the autonomous vehicle completes the delivery of the at least one autonomous-delivery eligible item, generating an alert to the delivery vehicle operator. In various embodiments, identifying at least one manual delivery location as a launch location for the autonomous vehicle to depart the delivery vehicle comprises: identifying a manual delivery location within a defined distance of the destination location, wherein the defined distance is less than a travel range of the autonomous vehicle.

BRIEF DESCRIPTION OF THE SEVERAL VIEWS OF THE DRAWINGS

Reference will now be made to the accompanying drawings, which are not necessarily drawn to scale, and wherein:

FIG. **1** is a diagram of a system that can be used to practice various embodiments of the present invention.

FIG. **2** is a schematic of a mapping computing entity in accordance with certain embodiments of the present invention.

FIG. **3** is a schematic of a mobile computing entity in accordance with certain embodiments of the present invention.

FIG. **4** schematically depicts a top view of an autonomous delivery vehicle according to one or more embodiments of the present invention.

FIG. **5** schematically depicts a manual delivery vehicle and a plurality of autonomous delivery vehicles according to one or more embodiments of the present invention.

FIG. **6** is a flowchart depicting various steps for establishing a drone launch location according to various embodiments.

FIGS. **7-9** depict example manual delivery vehicle travel paths relative to various delivery locations according to various embodiments.

FIG. **10** illustrates example data stored in a serviceable point profile according to various embodiments.

FIG. **11** is a flowchart depicting various steps for establishing a drone launch location according to various embodiments.

FIG. **12** depicts an example manual delivery vehicle travel path relative to various delivery locations according to various embodiments.

FIG. **13** illustrates example data stored in a serviceable point profile according to various embodiments.

FIG. **14** is a flowchart depicting various steps for establishing a drone launch location according to various embodiments.

FIG. **15** depicts an example manual delivery vehicle travel path relative to various delivery locations according to various embodiments.

FIG. **16** illustrates example data stored in a serviceable point profile according to various embodiments.

DETAILED DESCRIPTION

The present disclosure more fully describes various embodiments with reference to the accompanying drawings. It should be understood that some, but not all embodiments are shown and described herein. Indeed, the embodiments may take many different forms, and accordingly this disclosure should not be construed as limited to the embodiments set forth herein. Rather, these embodiments are provided so that this disclosure will satisfy applicable legal requirements. Like numbers refer to like elements throughout.

I. OVERVIEW

Various embodiments are directed to systems and methods for autonomously delivering items to corresponding destination locations located proximate a delivery route for a manual delivery vehicle (e.g., a delivery vehicle operated by a human; an autonomous base delivery vehicle transporting a human delivery personnel who completes various deliveries; an autonomous base delivery vehicle transporting a plurality of smaller, auxiliary autonomous vehicles (referred to herein simply as autonomous vehicles); and/or the like). The manual delivery vehicle serves as a launching point for the autonomous delivery vehicles, and accordingly various embodiments are configured to determine an optimal launching time/location for the autonomous vehicle to depart from the manual delivery vehicle, relative to the location of the manual delivery vehicle along its route. The optimal launching location may be established based at least in part on the overall travel range of the autonomous vehicle, the estimated travel time for the autonomous vehicle to reach the destination location and to return to the manual delivery vehicle, the estimated amount of time the manual delivery vehicle is likely to remain at a particular location (e.g., a manual delivery destination), and/or the like. Accordingly, the launch location for the autonomous vehicle may be established to minimize travel delays of the manual delivery vehicle while ensuring the autonomous vehicle is able to complete an assigned delivery task and to return to the manual delivery vehicle.

In various embodiments, launch locations are selected from a variety of potential launch locations within a threshold distance away from an intended autonomous delivery destination location. The launch locations may be selected based on the amount of time the manual delivery vehicle is expected to remain within the threshold distance of the intended autonomous delivery destination location (e.g., while a delivery vehicle operator completes manual deliveries to locations within the threshold distance), the estimated amount of time to complete the autonomous delivery, and/or the like.

In certain embodiments, launch locations may be predesignated, and accordingly autonomous delivery may be available only for destination locations located within a predefined distance of a particular predesignated launch location. For example, certain manual delivery destinations (e.g., office buildings, apartment building, malls, and/or other delivery destinations which are expected to require a lengthy stop time to complete deliveries) may be indicated as predesignated launch locations. Accordingly, autonomous delivery may be available only for destination locations within a defined distance away from the predesignated launch locations.

In certain embodiments, launch locations for various autonomous deliveries may be identified based on one or more established clusters of locations, between which autonomous delivery is considered eligible. For example, neighborhoods, geofenced areas, and/or the like may encompass a plurality of clustered destination locations, such that any one of the destination locations within the location cluster may serve as a launch location for autonomous delivery to any other destination locations within the same location cluster. As just one example, a first-visited manual delivery destination location within a location cluster (e.g., the first residence visited by a delivery vehicle operator within a particular neighborhood) may be designated as a launch location for one or more autonomous deliveries to other destination locations located within the same location cluster.

II. COMPUTER PROGRAM PRODUCTS, METHODS, AND COMPUTING ENTITIES

Embodiments of the present invention may be implemented in various ways, including as computer program products that comprise articles of manufacture. A computer program product may include a non-transitory computer-readable storage medium storing applications, programs, program modules, scripts, source code, program code, object code, byte code, compiled code, interpreted code, machine code, executable instructions, and/or the like (also referred to herein as executable instructions, instructions for execution, program code, and/or similar terms used herein interchangeably). Such non-transitory computer-readable storage media include all computer-readable media (including volatile and non-volatile media).

In one embodiment, a non-volatile computer-readable storage medium may include a floppy disk, flexible disk, hard disk, solid-state storage (SSS) (e.g., a solid state drive (SSD), solid state card (SSC), solid state module (SSM)), enterprise flash drive, magnetic tape, or any other non-transitory magnetic medium, and/or the like. A non-volatile computer-readable storage medium may also include a punch card, paper tape, optical mark sheet (or any other physical medium with patterns of holes or other optically recognizable indicia), compact disc read only memory (CD-ROM), compact disc-rewritable (CD-RW), digital versatile disc (DVD), Blu-ray disc (BD), any other non-transitory optical medium, and/or the like. Such a non-volatile computer-readable storage medium may also include read-only memory (ROM), programmable read-only memory (PROM), erasable programmable read-only memory (EPROM), electrically erasable programmable read-only memory (EEPROM), flash memory (e.g., Serial, NAND, NOR, and/or the like), multimedia memory cards (MMC), secure digital (SD) memory cards, SmartMedia cards, CompactFlash (CF) cards, Memory Sticks, and/or the like. Further, a non-volatile computer-readable storage medium may also include conductive-bridging random access memory (CBRAM), phase-change random access memory (PRAM), ferroelectric random-access memory (FeRAM), non-volatile random-access memory (NVRAM), magnetoresistive random-access memory (MRAM), resistive random-access memory (RRAM), Silicon-Oxide-Nitride-Oxide-Silicon memory (SONOS), floating junction gate random access memory (FJG RAM), Millipede memory, racetrack memory, and/or the like.

In one embodiment, a volatile computer-readable storage medium may include random access memory (RAM), dynamic random access memory (DRAM), static random

access memory (SRAM), fast page mode dynamic random access memory (FPM DRAM), extended data-out dynamic random access memory (EDO DRAM), synchronous dynamic random access memory (SDRAM), double data rate synchronous dynamic random access memory (DDR SDRAM), double data rate type two synchronous dynamic random access memory (DDR2 SDRAM), double data rate type three synchronous dynamic random access memory (DDR3 SDRAM), Rambus dynamic random access memory (RDRAM), Twin Transistor RAM (TTRAM), Thyristor RAM (T-RAM), Zero-capacitor (Z-RAM), Rambus in-line memory module (RIMM), dual in-line memory module (DIMM), single in-line memory module (SIMM), video random access memory (VRAM), cache memory (including various levels), flash memory, register memory, and/or the like. It will be appreciated that where embodiments are described to use a computer-readable storage medium, other types of computer-readable storage media may be substituted for or used in addition to the computer-readable storage media described above.

As should be appreciated, various embodiments of the present invention may also be implemented as methods, apparatus, systems, computing devices, computing entities, and/or the like. As such, embodiments of the present invention may take the form of an apparatus, system, computing device, computing entity, and/or the like executing instructions stored on a computer-readable storage medium to perform certain steps or operations. However, embodiments of the present invention may also take the form of an entirely hardware embodiment performing certain steps or operations.

Embodiments of the present invention are described below with reference to block diagrams and flowchart illustrations. Thus, it should be understood that each block of the block diagrams and flowchart illustrations may be implemented in the form of a computer program product, an entirely hardware embodiment, a combination of hardware and computer program products, and/or apparatus, systems, computing devices, computing entities, and/or the like carrying out instructions, operations, steps, and similar words used interchangeably (e.g., the executable instructions, instructions for execution, program code, and/or the like) on a computer-readable storage medium for execution. For example, retrieval, loading, and execution of code may be performed sequentially such that one instruction is retrieved, loaded, and executed at a time. In some exemplary embodiments, retrieval, loading, and/or execution may be performed in parallel such that multiple instructions are retrieved, loaded, and/or executed together. Thus, such embodiments can produce specifically-configured machines performing the steps or operations specified in the block diagrams and flowchart illustrations. Accordingly, the block diagrams and flowchart illustrations support various combinations of embodiments for performing the specified instructions, operations, or steps.

III. EXEMPLARY SYSTEM ARCHITECTURE

FIG. **1** provides an illustration of a system that can be used in conjunction with various embodiments of the present invention. As shown in FIG. **1**, the system may include one or more vehicles (e.g., manual delivery vehicles **100**, autonomous delivery vehicles **140**, and/or the like), one or more mobile computing entities **105**, one or more mapping computing entities **110**, one or more Global Positioning System (GPS) satellites **115**, one or more location sensors, one or more information/data collection devices **130**, one or more networks **135**, one or more location devices, one or more user computing entities (not shown), and/or the like. Each of the components of the system may be in electronic communication with, for example, one another over the same or different wireless or wired networks including, for example, a wired or wireless Personal Area Network (PAN), Local Area Network (LAN), Metropolitan Area Network (MAN), Wide Area Network (WAN), or the like. Additionally, while FIG. **1** illustrates certain system entities as separate, standalone entities, the various embodiments are not limited to this particular architecture.

A. Exemplary Mapping Computing Entity

As shown in FIG. **2**, in one embodiment, the mapping computing entity **110** may include or be in communication with one or more processing elements **305** (also referred to as processors, processing circuitry, and/or similar terms used herein interchangeably) that communicate with other elements within the mapping computing entity **110** via a bus, for example. As will be understood, the processing element **305** may be embodied in a number of different ways. For example, the processing element **305** may be embodied as one or more complex programmable logic devices (CPLDs), microprocessors, multi-core processors, coprocessing entities, application-specific instruction-set processors (ASIPs), and/or controllers. Further, the processing element **305** may be embodied as one or more other processing devices or circuitry. The term circuitry may refer to an entirely hardware embodiment or a combination of hardware and computer program products. Thus, the processing element **305** may be embodied as integrated circuits, application specific integrated circuits (ASICs), field programmable gate arrays (FPGAs), programmable logic arrays (PLAs), hardware accelerators, other circuitry, and/or the like. As will therefore be understood, the processing element **305** may be configured for a particular use or configured to execute instructions stored in volatile or non-volatile media or otherwise accessible to the processing element **305**. As such, whether configured by hardware or computer program products, or by a combination thereof, the processing element **305** may be capable of performing steps or operations according to embodiments of the present invention when configured accordingly.

In one embodiment, the mapping computing entity **110** may further include or be in communication with non-volatile media (also referred to as non-volatile storage, memory, memory storage, memory circuitry and/or similar terms used herein interchangeably). In one embodiment, the non-volatile storage or memory may include one or more non-volatile storage or memory media **310** as described above, such as hard disks, ROM, PROM, EPROM, EEPROM, flash memory, MMCs, SD memory cards, Memory Sticks, CBRAIVI, PRAM, FeRAM, RRAM, SONOS, racetrack memory, and/or the like. As will be recognized, the non-volatile storage or memory media may store databases, database instances, database management system entities, data, applications, programs, program modules, scripts, source code, object code, byte code, compiled code, interpreted code, machine code, executable instructions, and/or the like. The term database, database instance, database management system entity, and/or similar terms used herein interchangeably may refer to a structured collection of records or information/data that is stored in a computer-readable storage medium, such as via a relational database, hierarchical database, and/or network database.

In one embodiment, the mapping computing entity **110** may further include or be in communication with volatile media (also referred to as volatile storage, memory, memory storage, memory circuitry and/or similar terms used herein interchangeably). In one embodiment, the volatile storage or memory may also include one or more volatile storage or memory media **315** as described above, such as RAM, DRAM, SRAM, FPM DRAM, EDO DRAM, SDRAM, DDR SDRAM, DDR2 SDRAM, DDR3 SDRAM, RDRAM, RIMM, DIMM, SIMM, VRAM, cache memory, register memory, and/or the like. As will be recognized, the volatile storage or memory media may be used to store at least portions of the databases, database instances, database management system entities, data, applications, programs, program modules, scripts, source code, object code, byte code, compiled code, interpreted code, machine code, executable instructions, and/or the like being executed by, for example, the processing element **305**. Thus, the databases, database instances, database management system entities, data, applications, programs, program modules, scripts, source code, object code, byte code, compiled code, interpreted code, machine code, executable instructions, and/or the like may be used to control certain aspects of the operation of the mapping computing entity **110** with the assistance of the processing element **305** and operating system.

As indicated, in one embodiment, the mapping computing entity **110** may also include one or more communications interfaces **320** for communicating with various computing entities, such as by communicating data, content, information, and/or similar terms used herein interchangeably that can be transmitted, received, operated on, processed, displayed, stored, and/or the like. For instance, the mapping computing entity **110** may communicate with computing entities or communication interfaces of the vehicle **100**, mobile computing entities **105**, and/or the like.

Such communication may be executed using a wired information/data transmission protocol, such as fiber distributed information/data interface (FDDI), digital subscriber line (DSL), Ethernet, asynchronous transfer mode (ATM), frame relay, information/data over cable service interface specification (DOCSIS), or any other wired transmission protocol. Similarly, the mapping computing entity **110** may be configured to communicate via wireless external communication networks using any of a variety of protocols, such as GPRS, UMTS, CDMA2000, 1×RTT, WCDMA, TD-SCDMA, LTE, E-UTRAN, EVDO, HSPA, HSDPA, Wi-Fi, WiMAX, UWB, IR protocols, Bluetooth protocols, USB protocols, and/or any other wireless protocol. As yet other examples, the mapping computing entity **110** may be configured to transmit and/or receive information/data transmissions via light-based communication protocols (e.g., utilizing specific light emission frequencies, wavelengths (e.g., visible light, infrared light, and/or the like), and/or the like to transmit data), to transmit data) via sound-based communication protocols (e.g., utilizing specific sound frequencies to transmit data), and/or the like. Although not shown, the mapping computing entity **110** may include or be in communication with one or more input elements, such as a keyboard input, a mouse input, a touch screen/display input, audio input, pointing device input, joystick input, keypad input, and/or the like. The mapping computing entity **110** may also include or be in communication with one or more output elements (not shown), such as audio output, video output, screen/display output, motion output, movement output, and/or the like.

As will be appreciated, one or more of the mapping computing entity's **110** components may be located remotely from other mapping computing entity **110** components, such as in a distributed system. Furthermore, one or more of the components may be combined and additional components performing functions described herein may be included in the mapping computing entity **110**. Thus, the mapping computing entity **110** can be adapted to accommodate a variety of needs and circumstances.

B. Exemplary User Computing Entity

In various embodiments, a user device as discussed herein may be a user computing entity **105**. As discussed herein, the user computing entity **105** may be a stationary computing device (e.g., a desktop computer, an artificial intelligence (AI) computing entity (e.g., Amazon Echo, Google Home, Apple HomePod, and/or the like) a server, a mounted computing device, and/or the like) or a mobile computing device (e.g., a PDA, a smartphone, a tablet, a phablet, a wearable computing entity, a mobile AI computing entity (e.g., Amazon Echo Dot, and/or the like) and/or the like) having an onboard power supply (e.g., a battery). Moreover, in certain embodiments, the user computing entity **105** may be embodied as an Internet of Things (IoT) computing entity to provide various specific functionalities (e.g., a subset of those discussed herein). For example, the IoT computing entities may comprise a Nest thermostat, a Ring.com doorbell, a Wemo IoT power outlet, a Phillips Hue lightbulb, and/or the like.

FIG. **3** provides an illustrative schematic representative of a user computing entity **105** that can be used in conjunction with embodiments of the present invention. In one embodiment, the user computing entities **105** may include one or more components that are functionally similar to those of the mapping computing entity **110** and/or as described below. As will be recognized, user computing entities **105** can be operated by various parties, including residents, employees, and/or visitors of a facility. As shown in FIG. **5**, a user computing entity **105** can include an antenna **412**, a transmitter **404** (e.g., radio), a receiver **406** (e.g., radio), and a processing element **408** that provides signals to and receives signals from the transmitter **404** and receiver **406**, respectively.

The signals provided to and received from the transmitter **404** and the receiver **406**, respectively, may include signaling information/data in accordance with an air interface standard of applicable wireless systems to communicate with various entities, such as autonomous vehicles **140**, mapping computing entities **110**, location devices, and/or the like. In this regard, the user computing entity **105** may be capable of operating with one or more air interface standards, communication protocols, modulation types, and access types. More particularly, the user computing entity **105** may operate in accordance with any of a number of wireless communication standards and protocols. In a particular embodiment, the user computing entity **105** may operate in accordance with multiple wireless communication standards and protocols, such as GPRS, UMTS, CDMA2000, 1×RTT, WCDMA, TD-SCDMA, LTE, E-UTRAN, EVDO, HSPA, HSDPA, Wi-Fi, WiMAX, UWB, IR protocols, Bluetooth protocols, USB protocols, and/or any other wireless protocol. As yet other examples, the user computing entity **105** may be configured to transmit and/or receive information/data transmissions via light-based communication protocols (e.g., utilizing specific light emission frequencies, wavelengths (e.g., visible light, infrared light, and/or the like), and/or the like to transmit data), to transmit

data) via sound-based communication protocols (e.g., utilizing specific sound frequencies to transmit data), and/or the like.

Via these communication standards and protocols, the user computing entity **105** can communicate with various other entities using concepts such as Unstructured Supplementary Service information/data (US SD), Short Message Service (SMS), Multimedia Messaging Service (MMS), Dual-Tone Multi-Frequency Signaling (DTMF), and/or Subscriber Identity Module Dialer (SIM dialer). The user computing entity **105** can also download changes, add-ons, and updates, for instance, to its firmware, software (e.g., including executable instructions, applications, program modules), and operating system.

According to one embodiment, the user computing entity **105** (e.g., a mobile user computing entity **105**) may include location determining aspects, devices, modules, functionalities, and/or similar words used herein interchangeably. For example, the user computing entity **105** may include outdoor positioning aspects, such as a location module adapted to acquire, for example, latitude, longitude, altitude, geocode, course, direction, heading, speed, UTC, date, and/or various other information/data. In one embodiment, the location module can acquire data, sometimes known as ephemeris data, by identifying the number of satellites in view and the relative positions of those satellites. The satellites may be a variety of different satellites, including LEO satellite systems, DOD satellite systems, the European Union Galileo positioning systems, the Chinese Compass navigation systems, Indian Regional Navigational satellite systems, and/or the like. Alternatively, the location information/data may be determined by triangulating the user computing entity's **105** position in connection with a variety of other systems, including cellular towers, Wi-Fi access points, location devices, and/or the like. Similarly, the user computing entity **105** (e.g., a mobile user computing entity **105**) may include indoor positioning aspects, such as a location module adapted to acquire, for example, latitude, longitude, altitude, geocode, course, direction, heading, speed, time, date, location identifying data, and/or various other information/data. Some of the indoor aspects may use various position or location technologies including RFID tags, indoor location devices or transmitters, Wi-Fi access points, cellular towers, nearby computing devices (e.g., smartphones, laptops) and/or the like. For instance, such technologies may include iBeacons, Gimbal proximity beacons, BLE transmitters, Near Field Communication (NFC) transmitters, and/or the like. These indoor positioning aspects can be used in a variety of settings to determine the location of someone or something to within inches or centimeters.

The user computing entity **105** may also comprise a user interface (that can include a display **416** coupled to a processing element **408**) and/or a user input interface (coupled to a processing element **408**). For example, the user interface may be an application, browser, user interface, dashboard, webpage, and/or similar words used herein interchangeably executing on and/or accessible via the mobile computing entity **105** to interact with and/or cause display of information. The user input interface can comprise any of a number of devices allowing the user computing entity **105** to receive data, such as a keypad **418** (hard or soft), a touch display, voice/speech or motion interfaces, scanners, readers, or other input device. In embodiments including a keypad **418**, the keypad **418** can include (or cause display of) the conventional numeric (0-9) and related keys (#, *), and other keys used for operating the user computing entity **105** and may include a full set of alphabetic keys or set of keys that may be activated to provide a full set of alphanumeric keys. In addition to providing input, the user input interface can be used, for example, to activate or deactivate certain functions, such as screen savers and/or sleep modes. Through such inputs the user computing entity can collect contextual information/data as part of the telematics data.

The user computing entity **105** can also include volatile storage or memory **422** and/or non-volatile storage or memory **424**, which can be embedded and/or may be removable. For example, the non-volatile memory may be ROM, PROM, EPROM, EEPROM, flash memory, MMCs, SD memory cards, Memory Sticks, CBRAM, PRAM, FeRAM, RRAM, SONOS, racetrack memory, and/or the like. The volatile memory may be RAM, DRAM, SRAM, FPM DRAM, EDO DRAM, SDRAM, DDR SDRAM, DDR2 SDRAM, DDR3 SDRAM, RDRAM, RIMM, DIMM, SIMM, VRAM, cache memory, register memory, and/or the like. The volatile and non-volatile storage or memory can store databases, database instances, database management system entities, data, applications, programs, program modules, scripts, source code, object code, byte code, compiled code, interpreted code, machine code, executable instructions, and/or the like to implement the functions of the user computing entity **105**.

C. Exemplary Autonomous Vehicle

As utilized herein, autonomous vehicles **140** may be configured for transporting one or more shipments/items (e.g., one or more packages, parcels, bags, containers, loads, crates, items banded together, vehicle parts, pallets, drums, the like, and/or similar words used herein interchangeably). Various autonomous vehicles **140** may be configured as discussed in co-pending U.S. patent application Ser. No. 15/582,129, filed Apr. 28, 2017, and incorporated herein by reference in its entirety.

In certain embodiments, each autonomous vehicle **140** may be associated with a unique vehicle identifier (such as a vehicle ID) that uniquely identifies the autonomous vehicle **140**. The unique vehicle ID may include characters, such as numbers, letters, symbols, and/or the like. For example, an alphanumeric vehicle ID (e.g., "AS445") may be associated with each vehicle **100**. Although the autonomous vehicles **140** are discussed herein as comprising unmanned aerial vehicles (UAVs), it should be understood that the autonomous vehicles may comprise ground-based autonomous vehicles **140** in certain embodiments.

FIG. **4** illustrates an example autonomous vehicle **140** that may be utilized in various embodiments. As shown in FIG. **4**, the autonomous vehicle **140** is embodied as a UAV generally comprising a UAV chassis **142** and a plurality of propulsion members **143** extending outwardly from the UAV chassis **142** (in certain embodiments, the propulsion members are surrounded by propeller guards **141**). The UAV chassis **142** generally defines a body of the UAV, which the propulsion members **143** (e.g., propellers having a plurality of blades configured for rotating within a propeller guard circumscribing the propellers) are configured to lift and guide during flight. According to various embodiments, the UAV chassis **142** may be formed from any material of suitable strength and weight (including sustainable and reusable materials), including but not limited to composite materials, aluminum, titanium, polymers, and/or the like, and can be formed through any suitable process.

In the embodiment depicted in FIG. **4**, the autonomous vehicle **140** is a hexacopter and includes six separate propulsion members **143**, each extending outwardly from the

UAV chassis **142**. However, as will be appreciated from the description herein, the autonomous vehicle **140** may include any number of propulsion members **143** suitable to provide lift and guide the autonomous vehicle **140** during flight. The propulsion members **143** are configured to enable vertical locomotion (e.g., lift) and/or horizontal locomotion, as shown in the example embodiment of FIG. **4**, as well as enabling roll, pitch, and yaw movements of the autonomous vehicle **140**. Although not shown, it should be understood that autonomous vehicles **140** may comprise any of a variety of propulsion mechanisms, such as balloon-based lift mechanisms (e.g., enabling lighter-than-air transportation), wing-based lift mechanisms, turbine-based lift mechanisms, and/or the like.

In the illustrated embodiment, the propulsion members **143** are electrically powered (e.g., by an electric motor that controls the speed at which the propellers rotate). However, as will be recognized, the propulsion members **143** may be powered by internal combustion engines (e.g., alcohol-fueled, oil-fueled, gasoline-fueled, and/or the like) driving an alternator, hydrogen fuel-cells, and/or the like.

Moreover, as shown in FIG. **4**, the lower portion of the UAV chassis **142** is configured to receive and engage a parcel carrier **144** configured for selectively supporting a shipment/item to be delivered from a manual delivery vehicle **100** to a delivery destination. The parcel carrier **144** may define the lowest point of the autonomous vehicle **140** when secured relative to the chassis **142** of the autonomous vehicle **140**, such that a shipment/item carried by the autonomous vehicle **140** may be positioned below the chassis of the autonomous vehicle **140** during transit. In certain embodiments, the parcel carrier **144** may comprise one or more parcel engagement arms **145** configured to detachably secure a shipment/item relative to the autonomous vehicle **140**. In such embodiments, the shipment/item may be suspended by the parcel engagement arms **145** below the autonomous vehicle **140**, such that it may be released from the autonomous vehicle **140** while the autonomous vehicle **140** hovers over a desired delivery destination. However, it should be understood that the parcel carrier **144** may have any of a variety of configurations enabling the autonomous vehicle **140** to support a shipment/item during transit. For example, the parcel carrier **144** may comprise a parcel cage for enclosing a shipment/item during transit, a parcel platform positioned above the UAV chassis **142**, and/or the like.

In certain embodiments, the parcel carrier **144** may be detachably secured relative to the UAV chassis **142**, for example, such that alternative parcel carriers **144** having shipments/items secured thereto may be alternatively connected relative to the UAV chassis **142** for delivery. In certain embodiments, a UAV may be configured to deliver a shipment/item secured within a parcel carrier **144**, and return to a manual delivery vehicle **100** where the now-empty parcel carrier **144** (due to the delivery of the shipment/item that was previously secured therein) may be detached from the autonomous vehicle **140** and a new parcel carrier **144** having a second shipment/item may secured to the UAV chassis **142**.

As indicated by FIG. **5**, which illustrates an example manual delivery vehicle **100** according to various embodiments, the autonomous vehicle **140** may be configured to selectively engage a portion of the manual delivery vehicle **100** such that the manual delivery vehicle **100** may transport the autonomous vehicle **140**. For example, the UAV chassis **142** may be configured to engage one or more vehicle guide mechanisms secured relative to the manual delivery vehicle **100** to detachably secure the autonomous vehicle **140** relative to the manual delivery vehicle **100** when not delivering shipments/items. As discussed herein, the guide mechanism of a manual delivery vehicle **100** may be configured to enable an autonomous vehicle **140** to autonomously take-off from the manual delivery vehicle **100** to initiate a delivery activity and/or to autonomously land at the manual delivery vehicle **100** to conclude a delivery activity.

Moreover, the autonomous vehicle **140** additionally comprises an onboard control system (e.g., onboard computing entity) that includes a plurality of sensing devices that assist in navigating autonomous vehicle **140** during flight. For example, the control system is configured to control movement of the vehicle, navigation of the vehicle, obstacle avoidance, item delivery, and/or the like. Although not shown, the control system may additionally comprise one or more user interfaces, which may comprise an output mechanism and/or an input mechanism configured to receive user input. For example, the user interface may be configured to enable autonomous vehicle technicians to review diagnostic information/data relating to the autonomous vehicle **140**, and/or a user of the autonomous vehicle **140** may utilize the user interface to input and/or review information/data indicative of a destination location for the autonomous vehicle **140**.

The plurality of sensing devices are configured to detect objects around the autonomous vehicle **140** and provide feedback to an autonomous vehicle onboard control system to assist in guiding the autonomous vehicle **140** in the execution of various operations, such as takeoff, flight navigation, and landing, as will be described in greater detail herein. In certain embodiments, the autonomous vehicle control system comprises a plurality of sensors including ground landing sensors, vehicle landing sensors, flight guidance sensors, and one or more cameras. The vehicle landing sensors may be positioned on a lower portion of the UAV chassis **142** and assist in landing the autonomous vehicle **140** on a manual delivery vehicle **100** (e.g., as shown in FIG. **5**) as will be described in greater detail herein. The vehicle landing sensors may include one or more cameras (e.g., video cameras and/or still cameras), one or more altitude sensors (e.g., Light Detection and Ranging (LIDAR) sensors, laser-based distance sensors, infrared distance sensors, ultrasonic distance sensors, optical sensors and/or the like). Being located on the lower portion of the UAV chassis **142**, the vehicle landing sensors are positioned below the propulsion members **143** and have a line of sight with the manual delivery vehicle's UAV support mechanism (FIG. **5**) when the autonomous vehicle **140** approaches the manual delivery vehicle **100** during landing.

The autonomous vehicle's one or more cameras may also be positioned on the lower portion of the UAV chassis **142**, on propeller guards **141**, and/or the like. The one or more cameras may include video and/or still cameras, and may capture images and/or video of the flight of the autonomous vehicle **140** during a delivery process, and may assist in verifying or confirming delivery of a shipment/item to a destination, as will be described in greater detail herein. Being located on the lower portion of the UAV chassis **142**, the one or more cameras are positioned below the propulsion members **143** and have an unobstructed line of sight to view the flight of the autonomous vehicle **140**.

The autonomous vehicle's flight guidance sensors may also be positioned on the lower portion of the UAV chassis **142**. The flight guidance sensors may include LIDAR, LiDAR, LADAR, SONAR, magnetic-field sensors, RADAR sensors, and/or the like and may be configured to "sense and avoid" objects that the autonomous vehicle **140**

may encounter during flight. For example the flight guidance sensors **166** may be configured to detect objects positioned around the autonomous vehicle **140** such that the autonomous vehicle **140** may determine an appropriate flight path to avoid contact with the objects. By positioning the flight guidance sensors on the lower portion of the UAV chassis **142**, the flight guidance sensors are positioned below the propulsion members **143** and may have an unobstructed line of sight to view the flight of the autonomous vehicle **140**.

Moreover, the autonomous vehicle's ground landing sensors may be coupled to the upper portion of the UAV chassis **142**. For example, the ground landing sensors may be coupled to the propulsion members **143** at their outer perimeter on their respective propeller guards. According to various embodiments, the ground landing sensors are generally configured to detect a distance between the autonomous vehicle **140** and surfaces positioned within a line of sight of the ground landing sensors. For example, during flight, the ground landing sensors may detect a distance between the autonomous vehicle **140** and a landing surface, such as the ground or the roof of the manual delivery vehicle. By detecting a distance between the autonomous vehicle **140** and a landing surface, the ground landing sensors may assist in the takeoff and landing of the autonomous vehicle **140**. According to various embodiments, the ground landing sensors may include SONAR sensors, LIDAR sensors, IR-Lock sensors, infrared distance sensors, ultrasonic distance sensors, magnetic-field sensors, RADAR sensors, and/or the like.

In various embodiments, the control system of the autonomous vehicle **140** may encompass, for example, an information/data collection device similar to information/data collection device **130** discussed in reference to a manual delivery vehicle **100** or other computing entities. In general, the terms computing entity, entity, device, system, and/or similar words used herein interchangeably may refer to, for example, one or more computers, computing entities, desktop computers, mobile phones, tablets, phablets, notebooks, laptops, distributed systems, gaming consoles (e.g., Xbox, Play Station, Wii), watches, glasses, iBeacons, proximity beacons, key fobs, radio frequency identification (RFID) tags, ear pieces, scanners, televisions, dongles, cameras, wristbands, wearable items/devices, items/devices, vehicles, kiosks, input terminals, servers or server networks, blades, gateways, switches, processing devices, processing entities, set-top boxes, relays, routers, network access points, base stations, the like, and/or any combination of devices or entities adapted to perform the functions, operations, and/or processes described herein.

In one embodiment, the information/data collection device **130** may include, be associated with, or be in wired or wireless communication with one or more processors (various exemplary processors are described in greater detail below), one or more location-determining devices or one or more location sensors (e.g., Global Navigation Satellite System (GNSS) sensors, indoor location sensors, such as Bluetooth sensors, Wi-Fi sensors, and/or the like), one or more real-time clocks, a J-Bus protocol architecture, one or more electronic control modules (ECM), one or more communication ports for receiving information/data from various sensors (e.g., via a CAN-bus), one or more communication ports for transmitting/sending data, one or more RFID tags/sensors, one or more power sources, one or more information/data radios for communication with a variety of communication networks, one or more memory modules, and one or more programmable logic controllers (PLC). It should be noted that many of these components may be located in the autonomous vehicle **140** but external to the information/data collection device **130**.

In one embodiment, the one or more location sensors, modules, or similar words used herein interchangeably may be one of several components in wired or wireless communication with or available to the information/data collection device **130**. Moreover, the one or more location sensors may be compatible with GPS satellites **115**, such as Low Earth Orbit (LEO) satellite systems, Department of Defense (DOD) satellite systems, the European Union Galileo positioning systems, the Chinese Compass navigation systems, Indian Regional Navigational satellite systems, and/or the like. This information/data can be collected using a variety of coordinate systems, such as the Decimal Degrees (DD); Degrees, Minutes, Seconds (DMS); Universal Transverse Mercator (UTM); Universal Polar Stereographic (UPS) coordinate systems; and/or the like.

As discussed herein, triangulation and/or proximity based location determinations may be used in connection with a device associated with a particular autonomous vehicle **140** and with various communication points (e.g., cellular towers, Wi-Fi access points, and/or the like) positioned at various locations throughout a geographic area to monitor the location of the vehicle **100** and/or its operator. The one or more location sensors may be used to receive latitude, longitude, altitude, heading or direction, geocode, course, position, time, location identifying information/data, and/or speed information/data (e.g., referred to herein as location information/data and further described herein below). The one or more location sensors may also communicate with the mapping computing entity **110**, the information/data collection device **130**, user computing entity **105**, and/or similar computing entities.

In one embodiment, the ECM may be one of several components in communication with and/or available to the information/data collection device **130**. The ECM, which may be a scalable and subservient device to the information/data collection device **130**, may have information/data processing capability to decode and store analog and digital inputs received from, for example, vehicle systems and sensors. The ECM may further have information/data processing capability to collect and present location information/data to the J-Bus (which may allow transmission to the information/data collection device **130**), and output location identifying data, for example, via a display and/or other output device (e.g., a speaker).

As indicated, a communication port may be one of several components available in the information/data collection device **130** (or be in or as a separate computing entity). Embodiments of the communication port may include an Infrared information/data Association (IrDA) communication port, an information/data radio, and/or a serial port. The communication port may receive instructions for the information/data collection device **130**. These instructions may be specific to the vehicle **100** in which the information/data collection device **130** is installed, specific to the geographic area and/or serviceable point to which the vehicle **100** will be traveling, specific to the function the vehicle serves within a fleet, and/or the like. In one embodiment, the information/data radio may be configured to communicate with a wireless wide area network (WWAN), wireless local area network (WLAN), wireless personal area network (WPAN), or any combination thereof. For example, the information/data radio may communicate via various wireless protocols, such as 802.11, general packet radio service (GPRS), Universal Mobile Telecommunications System (UMTS), Code Division Multiple Access 2000

(CDMA2000), CDMA2000 1× (1×RTT), Wideband Code Division Multiple Access (WCDMA), Time Division-Synchronous Code Division Multiple Access (TD-SCDMA), Long Term Evolution (LTE), Evolved Universal Terrestrial Radio Access Network (E-UTRAN), Evolution-Data Optimized (EVDO), High Speed Packet Access (HSPA), High-Speed Downlink Packet Access (HSDPA), IEEE 802.11 (Wi-Fi), 802.16 (WiMAX), ultra-wideband (UWB), infrared (IR) protocols, Bluetooth protocols (including Bluetooth low energy (BLE)), wireless universal serial bus (USB) protocols, and/or any other wireless protocol. As yet other examples, the communication port may be configured to transmit and/or receive information/data transmissions via light-based communication protocols (e.g., utilizing specific light emission frequencies, wavelengths (e.g., visible light, infrared light, and/or the like), and/or the like to transmit data), via sound-based communication protocols (e.g., utilizing specific sound frequencies to transmit data), and/or the like.

In various embodiments, the autonomous vehicle **140** may comprise a user interface one or more input devices and/or one or more output devices configured to receive user input and/or to provide visual and/or audible output to a user (e.g., a programmer; a technician, and/or the like). For example, the vehicle may comprise a touchscreen (e.g., a capacitive touchscreen), a keyboard, a mouse, a touchpad, a display (e.g., an LCD display, an LED display, a tube display, and/or the like), and/or the like.

As discussed herein, the onboard control system of the autonomous vehicle **140** may be configured to generate and/or retrieve navigational instructions for the autonomous vehicle **140** to move to a particular destination location within the facility. The onboard control system may be configured to interpret the navigational instructions relative to a determined location of the autonomous vehicle **140**, and to provide signals to the onboard locomotion mechanisms to move the autonomous vehicle **140** along a determined route to the destination location while avoiding obstacles detected by the one or more sensors of the control system.

D. Exemplary Manual Delivery Vehicle

As discussed herein, a manual delivery vehicle **100** may be a human operable delivery vehicle configured for transporting a vehicle operator, a plurality of items, and one or more autonomous vehicles **140** along a delivery route. However, it should be understood that in certain embodiments, the manual delivery vehicle **100** may itself be autonomous or semi-autonomous. In certain embodiments, an autonomous manual delivery vehicle **100** may be configured as an autonomous base vehicle configured to carry a plurality of items, one or more smaller, auxiliary autonomous vehicles (e.g., autonomous vehicles **140** described in detail herein), a human delivery personnel (e.g., who may complete various deliveries from the manual delivery vehicle **100** to respective destination locations), and/or the like. For example, a vehicle **100** may be a manned or an unmanned tractor, truck, car, motorcycle, moped, Segway, bicycle, golf cart, hand truck, cart, trailer, tractor and trailer combination, van, flatbed truck, vehicle, drone, airplane, helicopter, boat, barge, and/or any other form of object for moving or transporting people, UAVs, and/or shipments/items (e.g., one or more packages, parcels, bags, containers, loads, crates, items banded together, vehicle parts, pallets, drums, the like, and/or similar words used herein interchangeably). In one embodiment, each vehicle **100** may be associated with a unique vehicle identifier (such as a vehicle ID) that uniquely identifies the vehicle **100**. The unique vehicle ID (e.g., trailer ID, tractor ID, vehicle ID, and/or the like) may include characters, such as numbers, letters, symbols, and/or the like. For example, an alphanumeric vehicle ID (e.g., "AS445") may be associated with each vehicle **100**. In another embodiment, the unique vehicle ID may be the license plate, registration number, or other identifying information/data assigned to the vehicle **100**. In various embodiments, the manual delivery vehicle **100** may be configured as discussed in co-pending U.S. patent application Ser. No. 15/582,129, filed Apr. 28, 2017, and incorporated herein by reference in its entirety.

In various embodiments, the manual delivery vehicle **100** comprises one or more autonomous vehicle support mechanisms, as shown in FIG. **5**. The autonomous vehicle support mechanisms may be configured to enable the autonomous vehicles **140** to launch and land at the manual delivery vehicle **100** while completing autonomous deliveries. In certain embodiments, the autonomous vehicle support mechanisms may be configured to enable the autonomous vehicles **140** to launch and/or land while the manual delivery vehicle **100** is moving, however certain embodiments may be configured to enable autonomous vehicle **140** launching and/or landing while the manual delivery vehicle **100** is stationary.

Moreover, although not shown, the interior of the manual delivery vehicle **100** may comprise a cargo area configured for storing a plurality of items, a plurality of autonomous vehicles **140**, a plurality of autonomous vehicle components, and/or the like. In certain embodiments, items designated for autonomous delivery may be stored in one or more autonomously operated storage assemblies within the cargo area of the manual delivery vehicle **100**. When a particular item is identified as ready for delivery, the storage assembly autonomously delivers the item to an autonomous vehicle **140** for delivery.

Moreover, the manual delivery vehicle **100** may comprise and/or be associated with one or more computing entities, devices, and/or similar words used herein interchangeably. For example, the manual delivery vehicle **100** may be associated with an information/data collection device **130** or other computing entities. In general, the terms computing entity, entity, device, system, and/or similar words used herein interchangeably may refer to, for example, one or more computers, computing entities, desktop computers, mobile phones, tablets, phablets, notebooks, laptops, distributed systems, gaming consoles (e.g., Xbox, Play Station, Wii), watches, glasses, iBeacons, proximity beacons, key fobs, RFID tags, ear pieces, scanners, televisions, dongles, cameras, wristbands, wearable items/devices, items/devices, vehicles, kiosks, input terminals, servers or server networks, blades, gateways, switches, processing devices, processing entities, set-top boxes, relays, routers, network access points, base stations, the like, and/or any combination of devices or entities adapted to perform the functions, operations, and/or processes described herein. FIG. **2** provides a block diagram of an exemplary information/data collection device **130** that may be attached, affixed, disposed upon, integrated into, or part of a vehicle **100**. The information/data collection device **130** may collect telematics information/data (including location data) and transmit/send the information/data to the mobile computing entity **105**, the mapping computing entity **110**, and/or various other computing entities via one of several communication methods.

In one embodiment, the information/data collection device **130** may include, be associated with, or be in wired or wireless communication with one or more processors

(various exemplary processors are described in greater detail below), one or more location-determining devices or one or more location sensors (e.g., GNSS sensors), one or more telematics sensors, one or more real-time clocks, a J-Bus protocol architecture, one or more ECMs, one or more communication ports for receiving telematics information/data from various sensors (e.g., via a CAN-bus), one or more communication ports for transmitting/sending data, one or more RFID tags/sensors, one or more power sources, one or more information/data radios for communication with a variety of communication networks, one or more memory modules, and one or more programmable logic controllers (PLC). It should be noted that many of these components may be located in the vehicle **100** but external to the information/data collection device **130**.

In one embodiment, the one or more location sensors, modules, or similar words used herein interchangeably may be one of several components in wired or wireless communication with or available to the information/data collection device **130**. Moreover, the one or more location sensors may be compatible with GPS satellites **115**, LEO satellite systems, DOD satellite systems, the European Union Galileo positioning systems, the Chinese Compass navigation systems, Indian Regional Navigational satellite systems, and/or the like, as discussed above in reference to the autonomous delivery vehicle. Alternatively, triangulation may be used in connection with a device associated with a particular vehicle and/or the vehicle's operator and with various communication points (e.g., cellular towers or Wi-Fi access points) positioned at various locations throughout a geographic area to monitor the location of the vehicle **100** and/or its operator. The one or more location sensors may be used to receive latitude, longitude, altitude, heading or direction, geocode, course, position, time, and/or speed information/data (e.g., referred to herein as telematics information/data and further described herein below). The one or more location sensors may also communicate with the mapping computing entity **110**, the information/data collection device **130**, user computing entity **105**, and/or similar computing entities.

In one embodiment, the ECM may be one of several components in communication with and/or available to the information/data collection device **130**. The ECM, which may be a scalable and subservient device to the information/data collection device **130**, may have information/data processing capability to decode and store analog and digital inputs from vehicle systems and sensors (e.g., location sensor). The ECM may further have information/data processing capability to collect and present collected information/data to the J-Bus (which may allow transmission to the information/data collection device **130**).

As indicated, a communication port may be one of several components available in the information/data collection device **130** (or be in or as a separate computing entity). Embodiments of the communication port may include an Infrared information/data Association (IrDA) communication port, an information/data radio, and/or a serial port. The communication port may receive instructions for the information/data collection device **130**. These instructions may be specific to the vehicle **100** in which the information/data collection device **130** is installed, specific to the geographic area in which the vehicle **100** will be traveling, specific to the function the vehicle **100** serves within a fleet, and/or the like. In one embodiment, the information/data radio may be configured to communicate with WWAN, WLAN, WPAN, or any combination thereof, as discussed in reference to the autonomous vehicle, above.

E. Exemplary Shipment/Item

In one embodiment, a shipment/item may be any tangible and/or physical object. In one embodiment, a shipment/item may be or be enclosed in one or more packages, envelopes, parcels, bags, goods, products, containers, loads, crates, items banded together, vehicle parts, pallets, drums, the like, and/or similar words used herein interchangeably. In one embodiment, each shipment/item may include and/or be associated with a shipment/item identifier, such as an alphanumeric identifier. Such shipment/item identifiers may be represented as text, barcodes, tags, character strings, Aztec Codes, MaxiCodes, information/data Matrices, Quick Response (QR) Codes, electronic representations, and/or the like. A unique shipment/item identifier (e.g., 123456789) may be used by the carrier to identify and track the shipment/item as it moves through the carrier's transportation network and to associate a particular physical shipment/item with an electronically stored shipment/item profile. For example, the shipment/item profile may be stored in a shipment/item level detail database, and may store data informing various carrier personnel and/or delivery vehicles (e.g., autonomous vehicle **140**) of delivery-related information/data specific to a particular shipment. Further, such shipment/item identifiers can be affixed to shipments/items by, for example, using a sticker (e.g., label) with the unique shipment/item identifier printed thereon (in human and/or machine readable form) or an RFID tag with the unique shipment/item identifier stored therein. Such items may be referred to as "connected" shipments/items and/or "non-connected" shipments/items.

In one embodiment, connected shipments/items include the ability to determine their locations and/or communicate with various computing entities. This may include the shipment/item being able to communicate via a chip or other devices, such as an integrated circuit chip, RFID technology, NFC technology, Bluetooth technology, Wi-Fi technology, light-based communication protocols, sound-based communication protocols, and any other suitable communication techniques, standards, or protocols with one another and/or communicate with various computing entities for a variety of purposes. Connected shipments/items may include one or more components that are functionally similar to those of the mapping computing entity **110** and/or user computing entity **105** as described herein. For example, in one embodiment, each connected shipment/item may include one or more processing elements, one or more display device/input devices (e.g., including user interfaces), volatile and non-volatile storage or memory, and/or one or more communications interfaces. In this regard, in some example embodiments, a shipment/item may communicate send "to" address information/data, received "from" address information/data, unique identifier codes, location information/data, status information/data, and/or various other information/data.

In one embodiment, non-connected shipments/items do not typically include the ability to determine their locations and/or might not be able communicate with various computing entities or are not designated to do so by the carrier. The location of non-connected shipments/items can be determined with the aid of other appropriate computing entities. For example, non-connected shipments/items can be scanned (e.g., affixed barcodes, RFID tags, and/or the like) or have the containers or vehicles in which they are located scanned or located. As will be recognized, an actual scan or location determination of a shipment/item is not necessarily required to determine the location of a shipment/item. That is, a scanning operation might not actually be

performed on a label affixed directly to a shipment/item or location determination might not be made specifically for or by a shipment/item. For example, a label on a larger container housing many shipments/items can be scanned, and by association, the location of the shipments/items housed within the container are considered to be located in the container at the scanned location. Similarly, the location of a vehicle transporting many shipments/items can be determined, and by association, the location of the shipments/items being transported by the vehicle are considered to be located in the vehicle **100** at the determined location. These can be referred to as "logical" scans/determinations or "virtual" scans/determinations. Thus, the location of the shipments/items is based on the assumption they are within the container or vehicle, despite the fact that one or more of such shipments/items might not actually be there.

F. Exemplary Shipment/Item Profile

As noted herein, various shipments/items may have an associated shipment/item profile, record, and/or similar words used herein interchangeably stored in a shipment/item detail database. The shipment/item profile may be utilized by the carrier to track the current location of the shipment/item and to store and retrieve information/data about the shipment/item. For example, the shipment/item profile may comprise electronic data corresponding to the associated shipment/item, and may identify various shipping instructions for the shipment/item, various characteristics of the shipment/item, and/or the like. The electronic data may be in a format readable by various computing entities, such as a mapping computing entity **110**, a user computing entity **105**, an autonomous vehicle control system, and/or the like. However, it should be understood that a computing entity configured for selectively retrieving electronic data within various shipment/item profiles may comprise a format conversion aspect configured to reformat requested data to be readable by a requesting computing entity.

In various embodiments, the shipment/item profile comprises identifying information/data corresponding to the shipment/item. The identifying information/data may comprise information/data identifying the unique item identifier associated with the shipment/item. Accordingly, upon providing the identifying information/data to the item detail database, the item detail database may query the stored shipment/item profiles to retrieve the shipment/item profile corresponding to the provided unique identifier.

Moreover, the shipment/item profiles may comprise shipping information/data for the shipment/item. For example, the shipping information/data may identify an origin location (e.g., an origin serviceable point), a destination location (e.g., a destination serviceable point), a service level (e.g., Next Day Air, Overnight, Express, Next Day Air Early AM, Next Day Air Saver, Jetline, Sprintline, Secureline, 2nd Day Air, Priority, 2nd Day Air Early AM, 3 Day Select, Ground, Standard, First Class, Media Mail, SurePost, Freight, and/or the like), whether a delivery confirmation signature is required, and/or the like. In certain embodiments, at least a portion of the shipping information/data may be utilized as identifying information/data to identify a shipment/item. For example, a destination location may be utilized to query the item detail database to retrieve data about the shipment/item.

In certain embodiments, the shipment/item profile comprises characteristic information/data identifying shipment/item characteristics. For example, the characteristic information/data may identify dimensions of the shipment/item (e.g., length, width, height), a weight of the shipment/item, contents of the shipment/item, and/or the like. In certain embodiments, the contents of the shipment/item may comprise a precise listing of the contents of the shipment/item (e.g., three widgets) and/or the contents may identify whether the shipment/item contains any hazardous materials (e.g., the contents may indicate whether the shipment/item contains one or more of the following: no hazardous materials, toxic materials, flammable materials, pressurized materials, controlled substances, firearms, and/or the like).

Moreover, as will be discussed in greater detail herein, the characteristic information/data may identify whether the shipment/item is eligible for autonomous delivery. The determination of whether the shipment/item is eligible for autonomous delivery may be based at least in part on an intended recipient's preferences (e.g., provided to the mapping computing entity **110** based at least in part on user input provided by the recipient), and/or based at least in part on various information/data contained within the shipment/item profile. In various embodiments, a computing entity associated with the item detail database (e.g., mapping computing entity **110**) may be configured to update the shipment/item profile to include an indication of whether the shipment/item is eligible for autonomous delivery. In making such a determination, the mapping computing entity **110** may be configured to determine whether an intended recipient has expressed a preference for whether autonomous delivery should be used to the deliver the shipment/item. For example, the mapping computing entity **110** may be configured to retrieve information/data from the shipment/item profile that identifies the intended recipient, and the mapping computing entity **110** may be configured to generate and transmit a query to a recipient preference database (e.g., operated by a separate computing entity and/or by the same computing entity) determine whether the recipient has expressed a preference for autonomous delivery of shipments/items. Responsive to determining that the recipient has indicated that autonomous delivery should not be utilized, the mapping computing entity **110** may update the shipment/item profile to indicate that autonomous delivery is not available for the shipment/item. However, if the recipient has indicated that autonomous delivery may be utilized, the mapping computing entity **110** may continue to determine whether the characteristics of the particular item satisfy autonomous delivery criteria. For example, the mapping computing entity **110** may compare the item dimensions against dimensional criteria for autonomous delivery to determine whether the item is sized appropriately for autonomous delivery. For example, the dimensional criteria may identify one or more maximum and/or minimum dimensions for items to be delivered via an autonomous vehicle **140**. Due to size limitations of the autonomous vehicles **140** themselves, autonomous delivery may only be available for items sized such that these items may be securely supported by the autonomous vehicle **140**. Similarly, the mapping computing entity **110** may compare the weight of the item against weight criteria for autonomous delivery to determine whether the shipment/item is within an appropriate weight range to enable autonomous delivery. For example, the weight criteria may specify a maximum and/or a minimum weight for items to be delivered via an autonomous vehicle **140**. The weight criteria may be established based on a weight limit of an autonomous vehicle **140**, such that items are only eligible for autonomous delivery if the propulsion mechanisms of the autonomous vehicle **140** are capable of maneuvering the combined weight of the autonomous vehicle **140** and the shipment/item. Finally, the mapping computing entity **110** may com-

pare the contents of the shipment/item against a listing of permitted and/or excluded item contents to determine whether the contents of the shipment/item are eligible for autonomous delivery.

Responsive to determining that the shipment/item satisfies all applicable autonomous delivery criteria, the mapping computing entity **110** may be configured to update the shipment/item profile to indicate that the shipment/item is eligible for autonomous delivery.

G. Exemplary Location Profile

In one embodiment, a serviceable point, serviceable point addresses, and/or similar words used herein interchangeably may be any identifiable location, such as one or more addresses, lockers, access points, delivery locations, parking locations, sidewalks, highways, trails, alleys, paths, walkways, streets, street segments, entrance or exit ramps, roads, longitude and latitude points, geocodes, zip codes, area codes, cities, counties, states, provinces, countries, stops (e.g., pick up stops, delivery stops, vehicle visits, stops) geofenced areas, geographic areas, landmarks, buildings, bridges, and/or other identifiable locations. For example, a serviceable point may be a residential location, such as one or more homes, one or more mobile homes, one or more apartments, one or more apartment buildings, one or more condominiums, one or more townhomes, one or more points at such locations, and/or the like. The serviceable point may also be any specific location at a residential location (e.g., front door of a residence, side door of a residence, and/or the like). A serviceable point may also be a commercial location, such as one or more stores in a mall, one or more office buildings, one or more office parks, one or more offices of an apartment complex, one or more garages, one or more lockers or access points, one or more warehouses, one or more restaurants, one or more stores, one or more retail locations, one or more points at such locations, and/or the like. The serviceable point may also be any specific location at a commercial location, e.g., (e.g., front door of a commercial location, dock of a commercial location, and/or the like). A serviceable point may be one or more streets, one or more street segments, one or more zones, one or more areas, one or more latitude and/or longitude points (e.g., 33.7869128, −84.3875602), one or more geocodes, and/or the like. A serviceable point may be any identifiable location. As will be recognized, a variety of approaches and techniques can be used to adapt to various needs and circumstances. In various embodiments, serviceable points may be configured as discussed in co-pending U.S. patent application Ser. No. 14/988,136, filed on Jan. 5, 2016, the contents of which are incorporated herein by reference in their entirety.

In various embodiments, a serviceable point profile corresponding to each of one or more (e.g., all) serviceable points serviced by the carrier may be created and stored in a serviceable point management database in electronic communication with the mapping computing entity **110**. Each serviceable point profile stored within the serviceable point management database may comprise serviceable point identifying information/data that may comprise a unique combination of characters, symbols, words, and/or the like that may be utilized to identify a particular serviceable point. In certain embodiments, the identifying information/data may comprise the street address of the serviceable point, and may include the street number, the street name, a sub-unit (e.g., apartment number, suite number, floor number, and/or the like), the city, the state/province, a postal/zip code, and/or the like. Moreover, the identifying information/data may comprise information/data indicative of alternative identifying information/data, if applicable. For example, if a particular location's street address changes, or if the particular location is commonly known by an identifier other than the street address, the serviceable point profile may comprise information/data identifying the previous and/or alternative location identifier for the serviceable point. In certain embodiments, the identifying information/data may comprise a shortened unique identifier that may be utilized to identify a particular serviceable point without utilizing an entire street address. For example, the shortened unique identifier may comprise a unique character string, a unique symbol and/or string of symbols, and/or the like.

Moreover, in various embodiments, each serviceable point profile additionally comprises a geocode for each of the associated serviceable point (e.g., a geocode established by one or more user computing entities **105** (e.g., mobile devices) while the user computing entity **105** is physically located at the serviceable point). As a specific example, a serviceable point profile may identify one or more preferred delivery locations for shipments/items to be delivered to a particular delivery address (e.g., a geocode accurately identifying the location of the front porch of a particular residence). In various embodiments, the serviceable point profile may identify a first delivery location at the corresponding delivery address for manual deliveries (e.g., deliveries made by a carrier employee should be placed on a front porch of the address) and/or may identify a second delivery location at the corresponding delivery address for autonomous deliveries (e.g., deliveries made by an autonomous UAV should be deposited on a second-story balcony of the address). Such data, including the information/data indicating the preferred serviceable point indicators and/or the alternative serviceable point indicators, may be utilized by the mapping computing entity **110** to match a particular serviceable point indicator provided on a shipment/item received by the carrier to one or more appropriate serviceable point profiles. In certain embodiments, the serviceable point profile may comprise one or more images of the serviceable point. For example, the serviceable point profile may comprise a street-view of the serviceable point, and/or one or more close-up views of particular preferred delivery locations for the serviceable point.

Moreover, each serviceable point profile may comprise information/data indicative of one or more linked serviceable points at geographically distinct locations. The linked serviceable points may be identified in each serviceable point profile based on a determination that autonomous delivery may be achieved between the serviceable point associated with the profile and the linked serviceable point, as discussed in greater detail below. The linked serviceable points to be associated with a particular serviceable point profile may be identified based at least in part on historical, real-time, and/or predictive information/data (e.g., historical information/data indicative of the distance between addresses and/or the elapsed time between deliveries (e.g., manual deliveries, autonomous deliveries, and/or the like to multiple addresses). In various embodiments, the one or more linked serviceable points may be serviceable points eligible for autonomous delivery while a manual delivery vehicle **100** is located at the serviceable point associated with the serviceable point profile. Alternatively, the linked serviceable points may be serviceable points at which a manual delivery vehicle **100** must be located to enable autonomous delivery to the serviceable point associated with the serviceable point profile. Accordingly, in certain embodi-

ments the serviceable point profile may identify at least two discrete listings of linked serviceable points, including a list identifying linked serviceable points to which autonomous delivery is available while the manual delivery vehicle **100** is physically located at the serviceable point, and a list identifying linked serviceable points from which autonomous delivery is available to the serviceable point while the manual delivery vehicle **100** is physically located at a linked serviceable point. FIGS. **10**, **13**, and **16**, discussed in greater detail below, illustrate example information/data that may be stored in a serviceable point profile.

In various embodiments, upon receipt of information/data indicating that a shipment/item is scheduled to be delivered to a particular destination serviceable point, the mapping computing entity **110** may be configured to determine whether the shipment/item is eligible for autonomous delivery (e.g., based on information/data stored within a shipment/item profile associated with the shipment/item), and/or whether other existing shipments/items are eligible for autonomous delivery based on the inclusion of a stop to deliver the shipment/item along a delivery route.

Accordingly, the one or more mapping computing entities **110** may first identify the corresponding serviceable point profile (e.g., stored within the one or more serviceable point management databases) for the particular destination serviceable point. In various embodiments, identifying an appropriate serviceable point profile for a particular shipment/item may comprise steps for obtaining information/data indicative of a destination for a shipment/item (e.g., by querying a shipment/item level detail database, by scanning an indicia on the package, and/or by receiving user input). Upon identifying the destination for the shipment/item, the serviceable point management database may be queried to identify a serviceable point profile corresponding to the destination of the shipment/item. The mapping computing entity **110** may then retrieve information/data associated with the serviceable point profile to ascertain whether a shipment/item destined for the serviceable point is eligible for autonomous delivery.

In various embodiments, the serviceable point profiles may comprise information/data indicative of one or more estimated elapsed times to complete a delivery at the serviceable point. The estimated elapsed time to complete a delivery at the serviceable point may be determined based on historical data, and may represent an average amount of time to make a delivery at the serviceable point. In certain embodiments, the amount of time to make a delivery may be identified as the elapsed time between when the manual vehicle's engine is turned off to enable the vehicle operator to disembark and complete the delivery and when the vehicle's engine is then turned on to enable the vehicle operator to leave the delivery location. Accordingly, the estimated amount of time to complete a delivery at a serviceable point comprises the sum of the estimated amount of time for the driver to unbuckle his/her seatbelt (after turning off the engine), get out of a driver's seat, retrieve a shipment/item to be delivered, disembark from the vehicle, transport the shipment/item from the vehicle to a delivery point at the destination location (e.g., from the vehicle to the front porch of the delivery location), to request and obtain a delivery signature (if applicable), to return to and board the vehicle, to sit in the driver's seat, to buckle the driver's seat belt (before turning on the engine), and to turn on the vehicle's engine.

To establish the estimated elapsed delivery time, a computing entity (e.g., mapping computing entity **110**) may store and retrieve historical delivery information/data indicative of historical deliveries to the particular serviceable point. The mapping computing entity **110** may retrieve information/data indicative of the amount of time a vehicle's engine is turned off while a delivery vehicle operator makes a delivery to the destination location. In various embodiments, the mapping computing entity **110** may retrieve historical vehicle telematics information/data and/or service information/data indicative of an amount of time to complete deliveries at various locations from one or more fleet management systems, such as those described in U.S. Pat. No. 9,208,626, the contents of which is incorporated herein by reference in its entirety.

In various embodiments, a serviceable point profile may comprise a plurality of elapsed delivery time estimates for various possible delivery scenarios to the serviceable point. For example, the serviceable point profile may comprise a chart showing various elapsed delivery time estimates corresponding to various delivery scenarios. As a specific example, the elapsed delivery time estimate chart may comprise (1) a delivery time estimate for regular, no-signature required deliveries, (2) a delivery time estimate for heavy (e.g., over 70 lb) deliveries, (3) a delivery time estimate for signature required deliveries, and/or the like. Accordingly, when retrieving information/data regarding the estimated elapsed time to complete an upcoming delivery as discussed herein, the mapping computing entity **110** may be configured to retrieve a delivery estimate corresponding to the delivery type for the upcoming delivery.

IV. EXEMPLARY SYSTEM OPERATION

With reference to FIGS. **6-16**, various embodiments establish autonomous delivery eligibility for various shipments/items in real-time, while a final delivery route is established for shipments/items to be delivered to associated destination locations (e.g., serviceable points). Certain embodiments establish final autonomous delivery eligibility based on a determination of whether an established delivery route passes within an established proximity to an autonomous delivery location, whether an established delivery route visits one or more serviceable points linked for autonomous delivery to a different serviceable point, whether an established delivery route causes a manual delivery vehicle **100** to be located within a particular geographical area for a threshold period of time, and/or the like. Such concepts are discussed in greater detail herein.

A. Determining Autonomous Delivery Eligibility Based on Autonomous Delivery Destination Locations

In various embodiments, determining whether one or more items may be delivered autonomously may be based at least in part on the location of the prospective autonomous delivery location (e.g., serviceable point) relative to the location of an established manual delivery vehicle route and/or the location of one or more deliveries on the ordered listing of deliveries to be completed by the manual delivery vehicle **100**. As discussed in reference to FIGS. **6-9**, autonomous delivery eligibility may be established for autonomous delivery destinations if a manual delivery vehicle route passes within a defined distance (e.g., linear distance) of the autonomous delivery location and remains within the defined distance for at least a threshold period of time to enable an autonomous vehicle **140** to depart from the manual delivery vehicle **100**, to complete the delivery, and to return to the manual delivery vehicle **100** while the

manual delivery vehicle **100** remains within the defined distance. In certain embodiments, delivery locations existing within the defined distance of the autonomous delivery location may be stored in the serviceable point profile corresponding to the autonomous delivery location as linked serviceable points.

FIG. **6** is a flowchart showing an example method for determining whether autonomous delivery is available for various shipments/items, and FIGS. **7-9** provide schematic illustrations of various scenarios that may arise from the methodology shown in the flowchart of FIG. **6**.

As shown at Block **601** of FIG. **6**, an example method for establishing autonomous delivery eligibility begins by identifying shipments/item identified as autonomous-delivery eligible. These shipments may be identified based on information/data stored in a corresponding shipment/item profile (e.g., an indicator stored therein providing information/data regarding whether the shipment/item satisfies the one or more criteria for establishing autonomous delivery eligibility for the shipments/items). Identifying the shipments/items as autonomous delivery eligible may thus comprise steps for querying the item detail database to identify those shipment/item profiles indicating that the corresponding shipments/items are eligible for autonomous delivery. In certain embodiments, a mapping computing entity **110** querying the item detail database may populate a listing of autonomous delivery eligible shipments/items for further analysis in determining whether these shipments/items may be delivered autonomously from a manual delivery vehicle **100** traversing an established vehicle route.

A manual delivery vehicle route (e.g., an ordered listing of deliveries and/or a predefined travel path for a manual delivery vehicle) may be established prior to determining whether the autonomous delivery eligible shipments/items may be delivered autonomously, as indicated at Block **602** of FIG. **6**. The manual delivery vehicle routes may be established based at least in part on the relative locations of manual deliveries to be delivered by a particular manual deliver vehicle **100** (and the associated manual delivery vehicle operator). In certain embodiments, the order in which the manual deliveries are scheduled to be delivered may be optimized to minimize the amount of resources consumed by the vehicle and/or vehicle operator while completing the delivery route. For example, the manual delivery vehicle route may be optimized to minimize an estimate fuel usage by the vehicle, an estimated amount of time to complete the route, and/or the like. In certain embodiments, a mapping computing entity **110** establishing the manual delivery vehicle route for a particular vehicle may complete the route optimization process for a plurality of vehicle routes in the aggregate, and may delegate various delivery stops to the vehicles to minimize the total resources utilized by the plurality of manual delivery vehicles **100** while completing all of the necessary delivery stops.

In certain embodiments, the manual delivery vehicle routes may be established to optimize resource usage for manual deliveries alone, and autonomous deliveries may be added thereto. However, in certain embodiments, the manual delivery vehicle routes may be established to minimize the amount of resources utilized to complete all of the manual deliveries and the autonomous deliveries. For example, the manual delivery vehicle route may be established having one or more autonomous delivery stops in which the manual delivery vehicle **100** stops at a predetermined location (which may or may not correspond to a manual delivery serviceable point) to enable the autonomous vehicles **140** to complete one or more deliveries while the manual delivery vehicle **100** remains stationary.

The established manual delivery vehicle route may comprise an ordered listing of deliveries to be completed by the manual delivery vehicle **100**, and therefore the manual delivery vehicle route may not have an established vehicle travel path associated therewith. In such embodiments, the manual delivery vehicle operator may select a path between each of the deliveries along the delivery route. However, in certain embodiments, the established manual delivery vehicle route may identifying a manual delivery vehicle travel path establishing an expected path between the various established manual delivery vehicle stops along the manual delivery vehicle route.

As indicated at Block **603**, the method comprises steps for determining one or more autonomous-vehicle delivery time radii surrounding each autonomous delivery destination serviceable point. The autonomous delivery destination serviceable points are the destination locations corresponding to each of the autonomous-delivery eligible shipments/items identified in the steps discussed at Block **601**. For example, the dashed circles shown in FIGS. **7-9** represent the boundaries of geographic areas within respective autonomous-vehicle delivery time radii relating to residence **1000***f* (shown shaded for emphasis relative to other potential delivery serviceable points). As shown in FIGS. **7-9**, each autonomous delivery destination serviceable point may be associated with a plurality of autonomous-vehicle delivery time radii, each representing a different estimated time for the autonomous delivery to complete an autonomous delivery from a manual delivery vehicle **100** positioned at the boundary of the geographical area. For example, boundary **1050***a* may be representative of an estimated autonomous delivery time of 10 minutes, and boundary **1050***b* may be representative of an estimated autonomous delivery time of 20 minutes. Although two boundaries are shown in FIGS. **7-9**, it should be understood that any number of boundaries may be established for various autonomous delivery destinations.

In various embodiments, the autonomous-vehicle delivery time radii may be established independently for each autonomous delivery serviceable point (e.g., based on historical information/data indicative of an elapsed amount of time to complete autonomous deliveries from manual delivery vehicles **100** positioned at various distances away from the autonomous delivery serviceable point). However, in certain embodiments, the autonomous-vehicle delivery time radii may be established based on standardized distances away from the autonomous delivery serviceable point. For example, the standardized distances may be established based on an estimated time for the autonomous vehicle **140** to travel the standardized distance, to deposit a shipment/item at a destination serviceable point, and to travel the standardized distance again, back to the manual delivery vehicle **100**.

With reference again to FIGS. **6-9**, the autonomous-delivery time radii are compared against a delivery route (shown as line **790** in FIGS. **6-9**) to determine an estimated amount of time that the delivery vehicle is likely to remain within the boundaries of the autonomous-delivery time radii, as indicated at Blocks **604-610**. FIGS. **7-9** provide illustrative schematics of various steps performed as indicated at Blocks **605-610**.

In each of FIGS. **7-9**, the delivery route proceeds along First St., along the entire length of Second St., and then onto Main St. The manual delivery vehicle **100** delivers to various manual delivery serviceable points (indicated with a

"Y" indication) along the manual delivery vehicle route. In each of FIGS. **7-9**, residence **1000***f* is indicated as autonomous delivery eligible (indicated by the "D" indication and the grey shading), and residence **1000***f* is associated with two autonomous delivery radii, **1050***a* and **1050***b*. For purposes of discussion, autonomous delivery radii **1050***a* is associated with a minimum presence time of 10 minutes to permit autonomous delivery to residence **1000***f*; autonomous delivery radii **1050***b* is associated with a minimum presence time of 20 minutes to permit autonomous delivery to residence **1000***f*; and it is assumed that manual deliveries at residences (e.g., any of residences **1000***a*-**1000***o*) takes 6 minutes.

FIG. **7** illustrates a scenario in which autonomous delivery is available based on the estimated amount of time that the manual delivery vehicle **100** will be positioned within delivery radii **1050***a*. As shown in FIG. **7**, the manual delivery vehicle **100** is scheduled to make deliveries at residences **1000***a*, **1000***i*, and **1000***j*. Because residences **1000***i* and **1000***j* are located within delivery radius **1050***a* (with a minimum presence time of 10 minutes), and each manual delivery is estimated to require 6 elapsed minutes (for a total cumulative time within radius **1050***a* of at least 12 minutes), autonomous delivery to residence **1000***f* is permitted. Following the Blocks shown in FIG. **6**, a mapping computing entity **110** reviewing the delivery route would determine that there is at least one delivery within the autonomous-delivery radius, as indicated at Block **605**, at Block **607** the mapping computing entity **110** would determine that the estimated time to deliver a shipment/item at the single serviceable point (6 minutes) is less than the minimum presence time. At Block **609**, the mapping computing entity **110** would determine that there is more than 1 delivery scheduled within radius **1050***a* (deliveries at residences **1000***i* and **1000***j*). At Block **610**, the mapping computing entity **110** would determine that the cumulative estimated delivery time (12 minutes) is greater than the minimum presence time (10 minutes) and the mapping computing entity **110** would set the autonomous vehicle launch location as the first delivery serviceable point approached by the manual delivery vehicle **100** that is positioned within radius **1050***a*, as indicated at Block **608**. In the case of FIG. **7**, the autonomous vehicle **140** would launch from the manual delivery vehicle **100** when the manual delivery vehicle **100** reached residence **1000***i*. The autonomous vehicle **140** would be expected to complete the autonomous delivery to residence **1000***f* before the manual delivery vehicle **100** completes both deliveries to residences **1000***i* and **1000***j*.

FIG. **8** illustrates a scenario in which autonomous delivery is not available to residence **1000***f* because the manual delivery vehicle **100** is not expected to remain within either distance radii **1050***a*, **1050***b* for at least the minimum presence time. In the illustrated embodiment of FIG. **8**, the only manual delivery serviceable point along the manual delivery vehicle route **790** that is within either radii **1050***a*, **1050***b* is a delivery to residence **1000***j*. Because the estimated delivery time to residence **1000***j* (6 minutes) is less than the minimum presence time for radius **1050***a* (10 minutes) and for radius **1050***b* (20 minutes), autonomous delivery may not be available for a shipment/item to be delivered to residence **1000***f*.

Describing the scenario of FIG. **8** in reference to the steps of FIG. **6**, the mapping computing entity **110** may begin by first reviewing delivery eligibility under the smallest radius (e.g., corresponding to boundary **1050***a*), and then may repeat the various analytical processes for increasingly large distance radii upon a determination that autonomous delivery eligibility is not established. Accordingly, at Block **605**, the mapping computing entity **110** would determine that there is at least one autonomous delivery within boundary **1050***a* (residence **1000***j*), however, at Block **607** the mapping computing entity **110** would determine that the estimated delivery time at the at least one delivery is less than the minimum presence time for the manual delivery vehicle **100** within the boundary **1050***a* (estimated delivery time of 6 minutes, versus a minimum presence time of 10 minutes). At Block **609**, the mapping computing entity **110** would determine that no other manual deliveries scheduled within the area bounded by boundary **1050***a*. Although not shown in FIG. **6**, the mapping computing entity **110** may then repeat the analysis represented by Blocks **605-610** with respect to the larger radius corresponding to boundary **1050***b*. However, there would be no additional deliveries within the area bounded by **1050***b*, and so the mapping computing entity **110** would then reclassify the delivery to residence **1000***f* as a manual delivery, as indicated at Block **606**. Because this is added as a new manual delivery vehicle stop, the mapping computing entity **110** would proceed to generate a new manual delivery vehicle route incorporating a stop at residence **1000***f*, as indicated at Block **602**.

FIG. **9** illustrates a scenario in which autonomous delivery is available to residence **1000***f* based on the amount of time that the manual delivery vehicle **100** is estimated to remain within the large area bounded by **1050***b* while traveling along the manual delivery vehicle route **791**. In the illustrated embodiment of FIG. **9**, the only delivery along the manual delivery vehicle route **791** that is within the area bounded by boundary **1050***a* is to residence **1000***j*. The estimated delivery time at residence **1000***j* (6 minutes) is less than the minimum presence time within boundary **1050***a* (10 minutes), and accordingly autonomous delivery to residence **1000***f* is not available based on the presence of the manual delivery vehicle **100** within boundary **1050***a*. However, there are estimated deliveries to residences **1000***j*, **10001**, **1000***g*, and **1000***d* within the area bounded by **1050***b*, for a total estimated delivery time of 24 minutes (6 minutes for each delivery) within the area bounded by **1050***b*. This total estimated delivery time is greater than the minimum presence time for the area within boundary **1050***b* (20 minutes), and accordingly autonomous delivery is available for a shipment/item destined to residence **1000***f* As noted in FIG. **9**, the delivery route for the manual delivery vehicle **100** passes out of the area bounded by **1050***b* while the delivery vehicle travels along Main Street, although the manual delivery vehicle **100** passes into the area bounded by **1050***b* while making deliveries to residences **1000***g* and **1000***d*. In various embodiments, determining whether a manual delivery vehicle **100** is estimated to remain within a radius distance for at least a minimum presence time may comprise summing the total estimated amount of time the manual delivery vehicle **100** is expected to remain within the radius distance, regardless of whether the manual delivery vehicle **100** temporarily leaves the bounded area. In other words, the total presence time within the bounded area need not be continuous. However, in certain embodiments, each time the manual delivery vehicle **100** leaves the bounded area, the total presence time may reset, and accordingly the total presence time for the vehicle within a bounded area may be the total continuous presence time for the vehicle within the bounded area. In such an embodiment, the scenario shown in FIG. **9** would not enable autonomous delivery to residence **1000***f*.

With reference again to FIG. **6**, the scenario shown in FIG. **9** would be represented by the following computing

entity determinations. The mapping computing entity **110** would first proceed through Blocks **605-610** with respect to boundary **1050***a*, and would determine that autonomous delivery is not eligible based on manual deliveries within boundary **1050***a* (the only delivery within boundary **1050***a* is at residence **1000***j*). The mapping computing entity **110** would then repeat the analysis of Blocks **605-610** with respect to boundary **1050***b*. With respect to boundary **1050***b*, the mapping computing entity **110** would determine that there is at least one delivery within boundary **1050***b* (for example, at residence **10001**), as shown at Block **605**. At Block **607**, the mapping computing entity **110** would determine that the estimated delivery time at residence **10001** (6 minutes) is less than the minimum presence time (20 minutes) within boundary **1050***b*. At Block **609**, the mapping computing entity **110** would determine that additional deliveries are scheduled within boundary **1050***b* (e.g., deliveries at residences **10001**, **1000***j*, **1000***g*, and **1000***d*). At Block **610**, the mapping computing entity **110** would determine that the cumulative estimated delivery time for all of the deliveries (24 minutes) is greater than the minimum presence time (20 minutes). Accordingly, at Block **608** the mapping computing entity **110** sets the autonomous delivery launch location as residence **10001** (the first delivery within boundary **1050***b*).

For purposes of simplicity of explanation the forgoing discussion assumed that the manual delivery vehicle **100** is only present within a distance radius during the period of time that the manual delivery vehicle **100** is located at a scheduled delivery stop. However, it should be understood that in various embodiments, the travel time that the manual delivery vehicle **100** is moving within the radius (e.g., between delivery serviceable points), inclusive of travel delays (e.g., stops to turn across traffic, stops at traffic signals, and/or the like) may be considered when determining whether a manual delivery vehicle **100** is estimated to be present within a radius for at least the corresponding minimum presence time.

Moreover, in various embodiments, the launch location for an autonomous vehicle **140** may be set to any of a variety of locations within a radius area. For example, the launch location may be the location where the manual delivery vehicle **100** crosses into the radius area (e.g., at the time and location where the manual delivery vehicle **100** crosses into the radius area). With respect to FIG. **7** as an example, the launch location may be set to be immediately before the manual delivery vehicle **100** makes a right turn to follow the direction of travel of Second Street. Such embodiments are particularly available in embodiments in which the autonomous vehicle **140** is capable of launching from the manual delivery vehicle **100** while the manual delivery vehicle **100** is moving.

In certain embodiments, a determination of whether the manual delivery vehicle **100** is to be located within an autonomous delivery eligibility radius may be determined in real-time, by comparing a mapped representation of the manual delivery vehicle route against one or more boundaries, as illustrated in FIGS. **7-9**. However, as discussed herein, various embodiments may determine whether a particular delivery serviceable point is eligible for autonomous delivery based on linked delivery serviceable points stored within a serviceable point profile for the autonomous delivery serviceable point. For example, FIG. **10** provides an example of information/data stored within a serviceable point profile for residence **1000***f* that may be utilized to determine whether autonomous delivery is available. As shown in FIG. **10**, the serviceable point profile may comprise information/data identifying the one or more linked delivery serviceable points located within autonomous delivery ranges (e.g., corresponding to boundaries **1050***a*, **1050***b* of FIGS. **7-9**). Accordingly, a determination of whether autonomous delivery to the serviceable point (e.g., Residence **1000***o*), may comprise querying the item detail database to determine whether shipments/items are scheduled to be delivered to any of the one or more linked serviceable points, and then determining whether the cumulative delivery time for the one or more shipments/items satisfies an applicable minimum presence time. With reference to the scenario shown in FIG. **7**, autonomous delivery eligibility for deliveries to Residence **1000***f* may be determined by querying the serviceable point profile corresponding to Residence **1000***f* (as shown in FIG. **10**) to identify linked serviceable points within boundaries **1050***a*, **1050***b*. A mapping computing entity **110** may be configured to determine that Residences **1000***e*, **1000***i*, and **1000***j* are within boundary **1050***a* based on the information/data stored in the serviceable point profile for Residence **1000***f*. Accordingly, the mapping computing entity **110** may then query the item detail database to determine whether shipments/items are scheduled for manual delivery to any of Residences **1000***e*, **1000***i*, and/or **1000***j*. In the scenario shown in FIG. **7**, the mapping computing entity **110** may be configured to determine that deliveries are scheduled to Residences **1000***i* and **1000***j*. Accordingly based on the information/data stored within the serviceable point profile (e.g., as shown in FIG. **10**), the mapping computing entity **110** may determine that the manual delivery vehicle **100** is estimated to remain within boundary **1050***a* for at least the minimum presence time (e.g., 10 minutes) based on the cumulative delivery time for deliveries to Residences **1000***i* and **1000***j* (e.g., 12 minutes). Accordingly, autonomous delivery to Residence **1000***f* is available.

B. Determining Autonomous Delivery Eligibility Based on Manual Delivery Destination Serviceable Points

In various embodiments, determining whether one or more items may be delivered autonomously may be based at least in part on the location of the prospective autonomous delivery serviceable point relative to the location of a manual delivery serviceable point identified as an autonomous vehicle launch location. As discussed in reference to FIGS. **11-12**, autonomous delivery eligibility may be established for autonomous delivery destinations if an autonomous delivery serviceable point is within a defined distance (e.g., linear distance) of a particular manual delivery serviceable point identified as an autonomous vehicle launch location. For example, delivery serviceable points having an extended estimated elapsed delivery time may be identified as potential autonomous vehicle launch locations, because the manual delivery vehicle **100** is expected to remain stationary for an extended period of time, permitting autonomous deliveries to depart from the manual delivery vehicle **100**, deliver a shipment/item at an autonomous delivery serviceable point, and return to the manual delivery vehicle **100** while the manual delivery vehicle **100** remains located at the manual delivery serviceable point.

Establishing a particular manual delivery serviceable point as a launch location may be done dynamically and in real-time, based on the estimated elapsed delivery time at a particular serviceable point. For example, after establishing a manual delivery vehicle **100** route, the estimated elapsed delivery time for each manual delivery serviceable point

may be compared against a launch location criteria to determine whether the manual delivery serviceable point may be considered a launch location for the particular delivery route. For example, the launch location criteria may specify a threshold estimated elapsed delivery time (e.g., a minimum estimated elapsed delivery time) for a particular manual delivery serviceable point to be considered a launch location.

Alternatively, various manual delivery serviceable points may be pre-selected as autonomous vehicle launch locations. Such manual delivery serviceable points may be pre-selected based on historical information/data indicating that the manual delivery serviceable points have historically had an extended average elapsed delivery time when making deliveries to the manual delivery serviceable point. For example, based on retrieved historical data, a mapping computing entity **110** may be configured to determine that the average elapsed delivery time for a particular manual delivery serviceable point satisfies launch location criteria (e.g., specifying a threshold (e.g., minimum) estimated elapsed delivery time). As examples, deliveries to large office buildings, apartment buildings, condominium buildings, and/or the like may be determined to satisfy applicable launch location criteria.

In certain embodiments, the defined distance for autonomous deliveries from a particular manual delivery serviceable point may be defined for each manual delivery serviceable point individually. For example, the defined distance for a first apartment building may be larger than the defined distance for a second office building. In such embodiments, the estimated elapsed delivery time for the first apartment building may be longer than the estimated elapsed delivery time for the second office building, and accordingly the amount of time that one or more autonomous vehicles **140** may be away from the manual delivery vehicle **100** may be longer while the manual delivery vehicle **100** is located at the first apartment building than the second office building. However, it should be understood that in certain embodiments, a defined distance for autonomous deliveries may be universally applied to all identified launch locations (e.g., a defined distance of 1 mile may be utilized for all launch locations), and such a defined distance may be based at least in part on a travel range of the autonomous vehicles **140**.

Moreover, the defined distance for each launch location may be established dynamically, for example based on the estimated elapsed delivery time for deliveries to a particular manual delivery serviceable point during an established delivery route. Upon establishing a delivery route, inclusive of deliveries to a manual delivery destination identified as a launch location, a mapping computing entity **110** may determine the estimated elapsed delivery time at the identified launch location, and may dynamically establish the defined distance based on the estimated elapsed delivery time. For example, the defined distance may be established as the maximum distance that an autonomous vehicle **140** can travel away from the manual delivery vehicle **100** to complete an autonomous delivery and still return to the manual delivery vehicle **100** before the expiration of the estimated elapsed delivery time at the manual delivery serviceable point. However, it should be understood that the defined distance for each launch location may be pre-established for each launch location, and may not be dependent on expected deliveries to the manual delivery serviceable point. For example, the defined distance for a first apartment building may be set to be 1.5 miles, regardless of the number of deliveries made to the first apartment building during a particular delivery route.

FIG. **11** is a flowchart showing an example method for determining whether autonomous delivery is available for various shipments/items, and FIG. **12** provides a schematic illustration of a scenario in which autonomous delivery is available according to the methodology of FIG. **11**.

As shown at Block **901** of FIG. **11**, an example method for establishing autonomous delivery eligibility begins by identifying manual delivery serviceable points deemed to be potential launch locations. As noted herein, launch locations may be pre-established, and accordingly various serviceable points may be identified as launch locations for a vehicle route (e.g., a serviceable point profile corresponding to a particular serviceable point may identify that the serviceable point is a launch location). However, as noted above, launch locations may be determined dynamically, based on a determination that a manual delivery vehicle **100** is estimated to remain at a particular manual delivery serviceable point for more than a threshold amount of time, thereby enabling autonomous deliveries to be completed while the manual delivery vehicle **100** remains at the manual delivery serviceable point.

As indicated at Block **902**, autonomous-delivery eligible shipments/items are identified that are scheduled to be delivered during a particular vehicle route. As noted above, the autonomous-delivery eligible shipments/items may be indicated as being autonomous-delivery eligible in a shipment/item profile corresponding to the shipment/item.

As noted at Block **903**, various embodiments comprise steps for establishing a delivery route for the manual-deliveries. Such a manual delivery vehicle route may be established according to the methodology discussed in reference to FIG. **6**, above. Although shown as occurring after Blocks **901** and **902**, it should be understood that the steps reflected by Blocks **901-903** may be performed in any order.

With reference to FIGS. **11-12**, the location of the identified autonomous-delivery eligible shipments/items may be compared against one or more delivery radius surrounding the one or more identified launch locations to determine whether autonomous delivery from the launch locations may be completed to the autonomous-delivery eligible delivery serviceable points.

For example, in the scenario shown schematically in FIG. **12**, a manual delivery vehicle **100** traversing delivery route **1290** makes delivery stops at a plurality of residences **1000***a-o*, shops **1100***a-c*, and office buildings **1200***a-b* (e.g., those indicated with a "Y" to reflect a scheduled manual delivery stop). Of particular relevance, office building **1200***b* (shaded in grey for emphasis) has been indicated as a launch location for autonomous deliveries. As noted above, office building **1200***b* may have been pre-established as a launch location, or office building **1200***b* may have been established as a launch location responsive to determining that the manual delivery vehicle **100** is estimated to be located at the office building **1200***b* for at least a threshold amount of time to enable autonomous deliveries while the manual delivery vehicle **100** remains at the office building **1200***b*.

As shown in FIG. **12**, office building **1200***b* may be associated with an autonomous delivery range indicated by boundary **1250**. As mentioned herein, the autonomous delivery range may be pre-established for office building **1200***b*, or the autonomous delivery range may be established dynamically, for example, based at least in part on an estimated elapsed time to complete the manual deliveries at the office building **1200***b*.

In the scenario of FIG. **12**, comparing the destination serviceable point for various autonomous-delivery eligible shipments/items (Residences **1000***d*, **1000***k*, and **1000***o*; as

indicated by the "D" indicator corresponding to each residence) as indicated at Blocks **904-905** of FIG. **11**, indicates that only Residences **1000***k* and **1000***o* are within the autonomous-delivery eligible radius of office building **1200***b*. Accordingly, the autonomous-delivery eligible shipment/item destined for Residence **1000***d* is reclassified as a manual delivery shipment/item, as indicated at Block **907**, and the delivery route is updated to reflect the stop at Residence **1000***d*, as indicated at Block **903**.

With respect to Residences **1000***k* and **1000***o*, the mapping computing entity **110** may determine that these residences are within the autonomous-delivery eligible range of office building **1200***b*, and accordingly the mapping computing entity **110** may establish office building **1200***b* as the launch location for autonomous deliveries to each of Residences **1000***k* and **1000***o*, as shown at Block **906**.

In certain embodiments, a determination of whether autonomous delivery may be completed to a particular destination serviceable point may be determined in real-time, by comparing a mapped representation of the autonomous delivery serviceable points against various launch locations, as illustrated in FIG. **12**. However, as discussed herein, various embodiments may determine whether a particular delivery serviceable point is eligible for autonomous delivery based on linked delivery serviceable points stored within a serviceable point profile for the identified launch location. For example, FIG. **13** provides an example of information/data stored within a serviceable point profile for office building **1200***b* that may be utilized to determine whether autonomous delivery is available for one or more shipments/items to be delivered to locations surrounding office building **1200***b*. As shown in FIG. **13**, the serviceable point profile may comprise information/data identifying the one or more linked delivery serviceable points located within autonomous delivery range (e.g., corresponding to boundary **1250** of FIG. **12**). Accordingly, a determination of whether autonomous delivery to a particular serviceable point is available may comprise querying the serviceable point profile database based on information/data identifying a destination serviceable point for a particular shipment/item to determine whether the destination serviceable point is stored as a linked serviceable point to one or more launch locations. With reference to the scenario shown in FIG. **12**, upon receipt of information/data indicating that shipments/items to residences **1000***d*, **1000***k*, and **1000***o* are eligible for autonomous delivery, the mapping computing entity **110** may be configured to query the serviceable point profile database to determine whether any of residences **1000***d*, **1000***k*, and/or **1000***o* are identified as linked serviceable points located within an autonomous delivery range of an identified launch location and identified within the serviceable point profile corresponding to the identified launch location. Accordingly, the mapping computing entity **110** would retrieve the serviceable point profile corresponding to the office building **1200***b* (e.g., based on the results of a query for serviceable point profiles identifying one or more of residences **1000***d*, **1000***k*, and/or **1000***o* as linked serviceable points and would determine that only residences **1000***k* and **1000***o* are located within an autonomous delivery range of office building **1200***b*. Responsive to determining that residence **1000***d* is not identified as a linked serviceable point within other serviceable point profiles corresponding to launch locations, the delivery to residence **1000***d* is reclassified as a manual delivery shipment/item.

Although not shown in any of FIGS. **11-13**, in various embodiments a particular launch location may be associated with an autonomous delivery limit establishing a maximum number of autonomous deliveries that may be made while the manual delivery vehicle **100** is located at the launch location. The autonomous delivery limit may be pre-established for a particular launch location, and may be stored in the serviceable point profile for the launch location. In certain embodiments, the autonomous delivery limit may comprise a plurality of autonomous delivery limits, each of which provide an autonomous delivery limit based on the number of autonomous vehicles **140** carried by a particular manual delivery vehicle **100**. For example, the autonomous vehicle limit for a particular apartment building may set a first maximum number of autonomous deliveries to 6 for manual delivery vehicles **100** carrying 3 autonomous vehicles **140**; and a second maximum number of autonomous deliveries to 12 for manual delivery vehicles **100** carrying 6 autonomous vehicles **140**.

C. Determining Autonomous Delivery Eligibility Based on Geofences

In various embodiments, determining whether one or more items may be delivered autonomously may be based at least in part on the location of the prospective autonomous delivery serviceable point relative to a defined geofenced area. As discussed in reference to FIGS. **14-15**, autonomous delivery eligibility may be established for autonomous delivery destinations if an autonomous delivery serviceable point is positioned within a geofenced area satisfying a geofence-delivery criteria. For example, if the autonomous delivery serviceable point is positioned within a geofence comprising a threshold (e.g., minimum) number of manual delivery serviceable points along a vehicle route, then the autonomous delivery serviceable point is eligible for autonomous delivery. As a specific example, a particular geofence may be defined around a neighborhood comprising a plurality of residences, around a particular zip code, around a particular town, around a particular subsection of a neighborhood, and/or the like.

In certain embodiments, a mapping computing entity **110** may be configured to automatically generate a geofence to encompass a plurality of delivery serviceable points. For example, a geofence may be automatically generated in response to user input indicating that a plurality of delivery serviceable points should be grouped within the defined geofence. Upon receipt of such user input, the mapping computing entity **110** may be configured to automatically determine the location of boundaries of a geofence to encompass the identified delivery serviceable points, for example, based on location information/data stored in serviceable point profiles corresponding to the identified delivery serviceable points.

In certain embodiments, the mapping computing entity **110** may be configured to store information/data indicative of a plurality of geofenced areas in association with corresponding cluster profiles. Each cluster profile may be stored in a cluster profile database and may comprise information/data identifying those serviceable points within a common geofenced area. For example, all those serviceable points determined to be within a single geofenced area may be identified to be within a single cluster associated with a corresponding cluster profile.

In certain embodiments, the inclusion of a serviceable point within a particular geofenced area may be identified according to information/data stored in serviceable point profiles. For example, each serviceable point profile may comprise a cluster-identifier field having a unique identifier corresponding to the cluster stored therein. To identify

serviceable points within a common cluster, the serviceable point profile database may be queried to compile a listing of all those serviceable points sharing a common cluster identifier.

Alternatively, each serviceable point profile may identify each other serviceable point within a common cluster as linked serviceable points within the serviceable point profile. FIG. **16** illustrates example information/data that may be stored in a serviceable point profile for a serviceable point within a cluster of serviceable points, according to one embodiment. As shown in FIG. **16**, the serviceable point profile may comprise a cluster identifier field and a listing of linked serviceable points within the same cluster. However, as noted above, a serviceable point profile may comprise only one of (1) the cluster identifier field or (2) the listing of linked serviceable points within the same cluster.

As indicated in FIGS. **14-15**, the mapping computing entity **110** may be configured to determine whether autonomous delivery is available for one or more autonomous-delivery eligible shipments/items. Specifically, FIG. **14** is a flowchart showing an example method for determining whether autonomous delivery is available for various shipments/items, and FIG. **15** provides a schematic illustration of a scenario in which autonomous delivery is available according to the methodology of FIG. **14**.

As shown at Block **951** of FIG. **14**, an example method for establishing autonomous delivery eligibility begins by identifying geofenced areas identified as autonomous-delivery eligible. For example, various neighborhoods may be identified as autonomous delivery eligible, such that various shipments/items destined for delivery to locations within the neighborhood may be delivered autonomously while other shipments/items destined for delivery to locations within the neighborhood are delivered manually.

Upon identifying a geofenced area identified as autonomous-delivery eligible, the mapping computing entity **110** is configured to identify one or more autonomous-delivery eligible shipments/items destined for delivery to locations within the identified geofenced area, as indicated at Block **952**. As noted above, the autonomous-delivery eligible shipments/items may be indicated as being autonomous-delivery eligible in a shipment/item profile corresponding to the shipment/item.

As noted at Block **953**, various embodiments comprise steps for establishing a delivery route for manual deliveries. Such a manual delivery vehicle route may be established according to the methodology discussed in reference to FIG. **6**, above. Although shown as occurring after Blocks **951** and **952**, it should be understood that the steps reflected by Blocks **951-953** may be performed in any order.

With reference to FIGS. **14-15**, the established manual delivery vehicle route **1590** and the one or more autonomous-delivery eligible shipments/items may be compared against geofence-delivery criteria to determine whether autonomous delivery is available for one or more shipments/items. For example, the geofence-delivery criteria may specify a minimum number of manual deliveries within the geofenced area to enable autonomous delivery of various shipments/items. In certain embodiments, the minimum number of manual deliveries may specify the overall minimum number of manual deliveries for any number of autonomous deliveries. For example, the geofence-delivery criteria may indicate that there must be at least three manual deliveries scheduled within the geofenced area for autonomous delivery to be available for any shipments/items. In certain embodiments however, the minimum number of manual deliveries may specify a minimum number of manual deliveries for each scheduled autonomous delivery within the geofenced area. For example, the geofence-delivery criteria may indicate that there must be at least two manual deliveries scheduled within the geofenced area for each autonomous delivery scheduled within the geofenced area. As a more specific example, to deliver one shipment/item autonomously within the geofenced area, there must be at least two scheduled manual deliveries within the geofenced area. By extension to delivery two shipments/items autonomously, there must be four manual deliveries within the same geographical area.

As yet another example, the geofence-delivery criteria may specify a minimum estimated presence time for the manual delivery vehicle **100** to be located within the geofenced area. The estimated presence time may be determined based on an estimated elapsed delivery time at each manual delivery serviceable point within the geofenced area. In certain embodiments, the estimated presence time may comprise the cumulative estimated delivery time at each of the manual delivery serviceable points, the estimated travel time for the manual delivery vehicle **100** within the geofenced area, and/or the like.

In certain embodiments, the geofence-delivery criteria may be established for each geofenced area independently. For example, a first geofenced area may have a first set of geofence-delivery criteria associated therewith, and a second geofenced area may have a second set of geofence-delivery criteria associated therewith.

With reference to the scenario illustrated in FIG. **9**, initially assume the geofence-delivery criteria specifies an absolute minimum number of manual deliveries required for any number of autonomous deliveries within the same geofenced area. For purposes of discussion, assume the defined minimum number of manual deliveries is 4. Accordingly, because there are 4 scheduled manual deliveries within the geofenced area (at Residences **1000***i*, **1000***j*, **1000***g*, and **1000***h*; indicated with the "Y" indicator on each), the geofence-delivery criteria is determined to be satisfied, as indicated at Block **955** of FIG. **14**. Accordingly, autonomous-delivery is available to all 3 autonomous-delivery eligible serviceable points (Residences **1000***e*, **1000***k*, and **1000***o*; indicated with the "D" indicator and shaded for emphasis). Thus, as indicated at Block **956** of FIG. **14**, the mapping computing entity **110** would set the autonomous vehicle launch location as the first delivery serviceable point approached by the manual delivery vehicle **100** that is positioned within geofenced area **1060** (i.e., Residence **1000***i* in the scenario illustrated in FIG. **15**). As discussed in reference to FIG. **6**, the launch location for the autonomous vehicle **140** may be set to any of a variety of locations, such as the location where the manual delivery vehicle **100** first crosses into geofenced area **1060**. The autonomous vehicle(s) **140** would be expected to complete all of the autonomous deliveries before the manual delivery vehicle **100** completes all of the manual deliveries within the same geofenced area **1060**.

Again with reference to FIG. **9**, now assume the geofence-delivery criteria specifies a minimum number of manual deliveries required for each autonomous delivery within the geofenced area. For purposes of discussion, assume the defined minimum number of manual deliveries for each autonomous delivery is 2. Accordingly, because there are 4 scheduled manual deliveries within the geofenced area **1060**, only 2 autonomous deliveries may be completed. As discussed in greater detail herein, the mapping computing entity **110** may utilize any of a variety of methodologies for resolving autonomous delivery conflicts to determine which

autonomous-delivery eligible shipment/item should be reclassified as a manual delivery shipment/item. For example, because reclassifying the delivery to Residence **1000***k* as a manual delivery would not require a change to the manual delivery vehicle route, the mapping computing entity **110** may reclassify the delivery to Residence **1000***k* as a manual delivery, as indicated at Block **957**. As indicated in the prior example, the mapping computing entity **110** would set the autonomous vehicle launch location as the first delivery serviceable point approached by the manual delivery vehicle **100** that is positioned within geofenced area **1060** (i.e., Residence **1000***i* in the scenario illustrated in FIG. **15**) for autonomous deliveries to Residences **1000***e* and **1000***o*. As discussed in reference to FIG. **6**, the launch location for the autonomous vehicle **140** may be set to any of a variety of locations, such as the location where the manual delivery vehicle **100** first crosses into geofenced area **1060**. The autonomous vehicle(s) **140** would be expected to complete all of the autonomous deliveries before the manual delivery vehicle **100** completes all of the manual deliveries within the same geofenced area **1060**.

In certain embodiments, a determination of whether the manual delivery vehicle **100** will satisfy the geofence-delivery criteria may be made in real-time, by comparing a mapped representation of the manual delivery vehicle route (inclusive of scheduled stops) against the boundaries of a geofenced area, as illustrated in FIG. **15**. However, as discussed herein, various embodiments may determine whether one or more delivery serviceable points are eligible for autonomous delivery based on linked delivery serviceable points stored within a serviceable point profile, based on delivery serviceable points identified within a cluster profile, and/or the like. As noted above, FIG. **16** provides an example of information/data stored within a serviceable point profile for residence **1000***i* that may be utilized to determine whether autonomous delivery is available to various locations within geofenced area **1060**. Accordingly, a determination of whether autonomous delivery for shipments/items destined to various locations within geofenced area **1060** may be determined by querying the serviceable point profiles corresponding to various locations with the geofenced area **1060** to identify linked serviceable points within the common geofenced area **1060**. The mapping computing entity **110** may determine how many of the linked serviceable points have corresponding manual deliveries scheduled to their locations, and how many of the serviceable points have autonomous deliveries schedule to their respective locations. The mapping computing entity **110** may then compare the number of manual deliveries (and/or the estimated elapsed time of manual deliveries) and/or the number of autonomous deliveries against the geofence-delivery criteria to determine whether autonomous delivery is available for any of the shipments/items, as indicated in FIG. **14**.

D. Resolving Autonomous Delivery Eligibility Conflicts

The forgoing methodologies for establishing autonomous delivery eligibility may result in scenarios in which autonomous delivery to a particular location may be available from a plurality of launch locations, and/or the mapping computing entity **110** may be required to select only a subset of autonomous-delivery eligible shipments/items to reclassify as manual delivery shipments/items. The mapping computing entity **110** may be configured to resolve such conflicts to optimize the overall delivery activities (inclusive of both manual deliveries and autonomous deliveries) assigned to a particular manual delivery vehicle **100**. For example, the mapping computing entity **110** may be configured to minimize resource usage by the manual delivery vehicle **100**, the autonomous vehicle **140**, and/or the like.

1. Selecting One of a Plurality of Possible Launch Locations

In certain embodiments, autonomous delivery may be available to a particular autonomous delivery serviceable point from a plurality of possible launch locations. With reference to FIG. **12**, for example, if both office buildings **1200***a* and **1200***b* were indicated as possible launch locations, residence **1000***k* may be within an autonomous delivery range of both office buildings **1200***a* and **1200***b*. In order to determine which of the possible launch locations should be utilized for autonomous delivery, the mapping computing entity **110** may apply a delivery criteria hierarchy to select a particular launch location for an autonomous delivery. The delivery criteria hierarchy may comprise one or more criteria to be utilized to identify an optimal launch location for autonomous delivery. The criteria may be organized in a descending order of importance, such that the most-important criteria that resolves an outstanding conflict is automatically applied to establish an optimal launch location.

In certain embodiments, the delivery criteria hierarchy may cause the mapping computing entity **110** to analyze a plurality of autonomous delivery conflicts simultaneously to generate an optimal delivery plan for the manual delivery vehicle **100**. An example delivery criteria hierarchy is discussed below, although it should be understood that any criteria or combination of criteria may be utilized to resolve conflicts.

As an example, a delivery criteria hierarchy may consider the criteria listed in the chart below, beginning with the criteria identified as having the highest importance, and sequentially considering additional criteria having descending importance until the conflict is resolved.

Importance Ranking	Criteria
1	Maximizing the total number of autonomous deliveries.
2	Minimizing the distance travelled by the manual delivery vehicle along the delivery route.
3	Minimizing the distance travelled by the autonomous vehicles.
4	Launching from a location having a larger estimated duration.
5	Delivering from an earlier-approached launch location.
6	Random selection.

In certain embodiments, launch locations for various shipments/items may be selected in order to maximize the total number of autonomous deliveries that may be performed within the confines of applicable autonomous-delivery criteria. For example, the autonomous delivery criteria may set a maximum number of autonomous deliveries that may be performed from any one launch location. Accordingly, launch locations for particular shipments/items may be delegated between various shipments/items to maximize the total number of shipments/items that may be delivered autonomously. As a specific, and simplified example, assume the maximum number of autonomous deliveries that may be made from a particular launch location is 1. In such an embodiment, if a first shipment/item may be delivered autonomously from either a first launch location or a second launch location, but a second shipment/item may only be delivered autonomously from the second launch location, then the mapping computing entity **110** sets the first ship-

ment/item to be launched at the first launch location, and the second shipment/item to be launched at the second launch location.

In the event that the criteria for maximizing the total number of autonomous deliveries does not resolve outstanding conflicts, the mapping computing entity **110** may select appropriate launch locations to minimize the total distance travelled by the manual delivery vehicle **100** along the delivery route. For example, if autonomous delivery of a particular shipment/item may be achieved by launching from a first launch location or a second launch location, however launching from the second launch location would increase the distance travelled by the manual delivery vehicle **100** along the delivery route to add an additional manual delivery stop whereas launching from the first launch location would require the addition of an additional manual delivery vehicle route along a portion of the delivery route already scheduled to be travelled by the manual delivery vehicle **100**, then the mapping computing entity **110** assigns the first launch location to the shipment/item.

In the event that the criteria for minimizing the distance travelled by the manual delivery vehicle **100** does not resolve outstanding conflicts, the mapping computing entity **110** may be configured to identify a launch location for one or more shipments/items to minimize the distance travelled by the autonomous vehicle **140**. For example, the mapping computing entity **110** may be configured to select the launch location located geographically closer to the intended destination location for the shipment/item.

In the event that the criteria for minimizing the distance travelled by the autonomous vehicle **140** does not resolve outstanding conflicts, the mapping computing entity **110** may select a launch location corresponding to a manual delivery serviceable point having a longer estimated duration as the launch location for a particular shipment/item. For example, if the manual delivery vehicle **100** is expected to remain stationary at a first manual delivery serviceable point for a longer period of time than the expected time the vehicle will remain stationary at a second manual delivery serviceable point, the mapping computing entity **110** is configured to select the first manual delivery serviceable point as the launch location for the shipment/item.

In the event that the criteria for selecting a launch location having an expected longer duration does not resolve outstanding conflicts, the mapping computing entity **110** may select the earliest-in-time launch location along the manual delivery vehicle route as the launch location for autonomous delivery of a shipment/item.

Finally, as a fail-safe, the mapping computing entity **110** may be configured to randomly select a launch location for autonomous delivery for a shipment/item in the event none of the other criteria resolve outstanding conflicts in the selection of a launch location for a particular shipment/item.

It should be understood that, in certain embodiments, satisfying one of the delivery criteria may conceptually conflict with a separate delivery criteria. For example, maximizing the number of autonomous deliveries may cause the manual delivery vehicle **100** to travel a distance greater than otherwise possible. In such embodiments, the hierarchical nature of the delivery criteria resolves such conflicts, because once a delivery criteria solves a delivery conflict and selects an appropriate launch location for delivering a shipment/item autonomously, the mapping computing entity **110** does not further consider lower-ranked (or higher ranked) delivery criteria.

2. Selecting One of a Plurality of Autonomous-Delivery Eligible Shipments/Items for Reclassification as a Manual Delivery Serviceable Point.

In certain embodiments, applicable autonomous delivery criteria may indicate that only a subset of possible autonomous-delivery eligible shipments/items may actually be delivered autonomously. As indicated above, one potential reclassification criteria for identifying which of a plurality of shipments/items should be reclassified to be manual delivery eligible may be to identify a shipment/item that is already along an existing portion of a manual delivery vehicle route. However, certain embodiments may apply a reclassification criteria hierarchy, similar to the delivery criteria hierarchy described above. In various embodiments, the mapping computing entity **110** may be configured to apply criteria of decreasing identified importance to the plurality of possible shipments/items for reclassification until existing conflicts are resolved.

In certain embodiments, the reclassification criteria hierarchy may cause the mapping computing entity **110** to analyze a plurality of autonomous delivery conflicts simultaneously to generate an optimal delivery plan for the manual delivery vehicle **100**. The reclassification criteria may be analyzed in combination (e.g., simultaneously) with the delivery criteria to create the optimal delivery plan for the manual delivery vehicle **100**, for example to ensure that reclassification of various deliveries does not substantially increase the resources required to complete a delivery route (e.g., increasing delivery route time, decreasing number of autonomous deliveries, increasing estimated manual delivery vehicle fuel usage, and/or the like). An example reclassification criteria hierarchy is discussed below, although it should be understood that any criteria or combination of criteria may be utilized to resolve conflicts.

As an example, a reclassification criteria hierarchy may consider the criteria listed in the chart below, beginning with the criteria identified as having the highest importance, and sequentially considering additional criteria having descending importance until the conflict is resolved.

Importance Ranking	Criteria
1	Maximizing the total number of autonomous deliveries.
2	Minimizing the distance travelled by the manual delivery vehicle along the delivery route.
3	Minimizing the distance travelled by the autonomous vehicles.
4	Providing an autonomous delivery preference to delivery locations having identified characteristics.
5	Random selection.
6	Maximizing the total number of autonomous deliveries.

In certain embodiments, various shipments/items may be selectively reassigned for manual delivery to optimize the delivery of a plurality of shipments/items. For example, reassigning a particular shipment/item for manual delivery may result in a change in the route assigned to a corresponding manual delivery vehicle **100** that enables an increase in the number of shipments/items to be autonomously delivered. As a specific example, reassigning a shipment/item for manual delivery may reroute the manual delivery vehicle **100** along a street that would not have been traveled by the manual delivery vehicle but for the reassignment. That newly traveled street may be nearer to a plurality of autonomous delivery-eligible delivery serviceable points than any location along the prior manual delivery vehicle route, such

that a greater number of shipments/items may be delivered autonomously as a result of the reassignment.

Thus, in instances in which two (or more) manual delivery vehicle route alternatives may be selected, wherein each route alternative results in at least one package being delivered manually and at least one package being delivered autonomously, the mapping computing entity **110** may utilize the reclassification criteria to select the manual delivery vehicle route alternative which results in the greatest number of shipments/items being eligible for autonomous delivery. As noted, the reclassification criteria may be applied after a manual delivery vehicle route is established (in which case the reclassification criteria may cause a modification to the manual delivery vehicle route) and/or the reclassification criteria may be applied during generation of the manual delivery vehicle route.

In the event that the reclassification criteria for maximizing the total number of autonomous deliveries does not resolve outstanding conflicts (e.g., for reassigning a subset of a plurality of shipments/items for manual delivery), the mapping computing entity **110** may select identify one or more shipments/items for reassignment to minimize the total distance traveled by the manual delivery vehicle **100** along the delivery route. For example, if one autonomous delivery eligible shipment destination is located near an existing portion of a manual delivery vehicle route, and a second autonomous delivery eligible shipment destination is located farther away from the existing portion of the manual delivery vehicle route, such that reassigning the second autonomous delivery eligible shipment/item for manual delivery would increase the distance traveled by the manual delivery vehicle **100**, the mapping computing entity **110** may be configured to reassign the first shipment/item for manual delivery, while assigning the second shipment/item for autonomous delivery.

In the event that the reclassification criteria for minimizing the distance travelled by the manual delivery vehicle **100** does not resolve outstanding conflicts for reassigning a subset of a plurality of shipments/item for manual delivery, the mapping computing entity **110** may select one or more shipments/items for reassignment to manual delivery to minimize the distance travelled by the one or more autonomous vehicles **140**. Because the autonomous vehicles **140** may have limited flight times (e.g., due to limited onboard power supplies), the mapping computing entity **110** may reassign one or more shipments/items for manual delivery to minimize the total distance travelled by the autonomous vehicles **140**, thereby minimizing the risk of unanticipated power failures while the autonomous vehicles **140** are delivering shipments/items and are positioned away from the manual delivery vehicle **100**.

In the event that the reclassification criteria for minimizing the distance travelled by the autonomous vehicles **140** does not resolve outstanding conflicts, the mapping computing entity **110** may select one or more shipments/items for reassignment to manual delivery to provide a preference for autonomous delivery to delivery destinations having one or more identified characteristics. For example, a delivery destination may receive more than a threshold number of shipments/items in a given time period (e.g., each week), the delivery destination may be associated with a delivery customer who has paid for premium autonomous delivery services, the delivery destination may have a favorable autonomous delivery configuration (e.g., minimal airborne obstructions, low crime rates, secure delivery location, predictable landing location for the autonomous vehicle **140** at the delivery destination, and/or the like), and/or the like. In such embodiments, the mapping computing entity **110** may retrieve information/data stored within a delivery destination profile and/or a customer profile to determine whether a particular delivery destination satisfies one or more preference criteria when reassigning shipments/items for manual delivery. Responsive to determining that a particular destination serviceable point and/or customer profile satisfies the preference criteria, the mapping computing entity **110** may reassign a different shipment/item for manual delivery such that a shipment/item destined for the delivery serviceable point determined to satisfy the preference criteria is delivered autonomously.

Finally, as a fail-safe, the mapping computing entity **110** may be configured to randomly select one or more shipments/items for reassignment to manual delivery in the event that none of the other criteria resolve outstanding conflicts in the selection of a shipment/item to be reassigned. The random selection may be performed according to parameters that ensure that the outstanding conflict is resolved by the random selection. For example, the random selection may be limited to only those shipments/items for which a conflict has arisen, such that the selection of one or more of the shipments/items for reassignment necessarily resolves the outstanding conflict.

As mentioned above, satisfying one of the reassignment criteria may conceptually conflict with a separate reassignment criteria. For example, maximizing the number of autonomous deliveries may cause the manual delivery vehicle **100** to travel a distance greater than otherwise possible. In such embodiments, the hierarchical nature of the reassignment criteria resolves such conflicts, because once a delivery criteria solves a delivery conflict and selects an appropriate launch location for delivering a shipment/item autonomously, the mapping computing entity **110** does not further consider lower-ranked (or higher ranked) delivery criteria.

E. Executing a Delivery Route

Once various shipments/items to be delivered by a particular manual delivery vehicle **100** have been assigned for autonomous delivery and/or manual delivery, the mapping computing entity **110** establishes a final delivery route (e.g., an ordered listing of deliveries to be performed by a manual delivery vehicle **100** and/or an assigned travel path for the manual delivery vehicle **100**, including the location of scheduled stops for the manual delivery vehicle **100**) and launch locations for one or more autonomous vehicles **140** to deliver shipments/items between the manual delivery vehicle **100** and the destination serviceable point corresponding to the shipments/items. In certain embodiments, the final delivery route may be stored in a memory associated with the mapping computing entity **110**, and/or may be transmitted to an onboard computing entity for the manual delivery vehicle **100**, a user computing entity **105** carried by the manual delivery vehicle operator, the onboard control system of the autonomous vehicles **140**, and/or the like. In certain embodiments, the final delivery route may be viewable via a display associated with the computing entity. For example, the computing entity may be configured to generate a graphical display of a map indicating the assigned travel path for the manual delivery vehicle **100**, the location of various manual delivery stops (e.g., indicated by one or more icons), the launch location for various autonomous vehicles **140** (e.g., indicated by one or more icons), the expected travel path for the various autonomous vehicles

140, the destination serviceable points for the autonomously delivered shipments/items (e.g., indicated by one or more icons), and/or the like.

In operation, the execution of various delivery (and/or pick-up) processes defined for the delivery route may be based at least in part on the location of the manual delivery vehicle **100** along the assigned manual delivery route (and/or the location of the manual delivery vehicle **100** relative to one or more delivery stops included in the ordered listing of delivery stops for the manual delivery vehicle **100**). As noted, the manual delivery vehicle operator may be informed of the assigned manual delivery vehicle route via one or more computing entities onboard the manual delivery vehicle **100** and/or carried by the manual delivery vehicle operator. The manual delivery vehicle **100** may then traverse the assigned delivery route to proceed to various manual delivery serviceable points. As the manual delivery vehicle **100** moves, the onboard computing entity monitors the current location of the manual delivery vehicle **100** relative to established launch locations for the autonomous vehicles **140**. Upon reaching an established launch location (e.g., which may be at a manual delivery serviceable point and/or any point along the assigned manual delivery vehicle route), the onboard computing entity of the manual delivery vehicle provides signals to onboard launch mechanisms of the manual delivery vehicle **100** and/or to the onboard control system of the autonomous vehicle **140** to initialize a launch sequence for the autonomous vehicle **140**.

Once the autonomous vehicle **140** has launched from the manual delivery vehicle **100**, the manual delivery vehicle **100** (and/or manual delivery vehicle operator) continue to perform assigned delivery operations for manual delivery shipments/items. Simultaneously, the autonomous vehicle **140** navigates to an assigned destination serviceable point for an autonomous delivery shipment/item, utilizing onboard location determining devices, onboard sensors, and/or the like to travel to the desired destination serviceable point while avoiding obstacles along the way. Once at the destination serviceable point, the autonomous vehicle **140** locates the appropriate delivery location (e.g., via onboard sensors), and deposits the shipment/item at the appropriate delivery serviceable point (e.g., on a front porch, on a balcony, on a printed delivery target, and/or the like). Once the autonomous vehicle **140** deposits the shipment/item at the delivery serviceable point, the autonomous vehicle **140** returns to the manual delivery vehicle **100**. In various embodiments, the manual delivery vehicle **100** may have moved to a new location while the autonomous vehicle **140** was delivering the shipment/item, and accordingly the onboard control system of the autonomous vehicle **140** may be in electronic communication with the onboard computing entity of the manual delivery vehicle **100** to ascertain the current location of the manual delivery vehicle **100**. The manual delivery vehicle **100** may periodically send updated location information/data to the autonomous vehicle **140**, such that the autonomous vehicle **140** navigates to the location of the manual delivery vehicle **100**. Accordingly, even if the manual delivery vehicle **100** is moving, the autonomous vehicle **140** receives continuously updated location information/data for the manual delivery vehicle **100**. Once the autonomous vehicle **140** reaches the manual delivery vehicle **100**, the autonomous vehicle **140** may land on the manual delivery vehicle **100** (e.g., via one or more landing mechanisms of the manual delivery vehicle **100**). The autonomous vehicle **140** may then be stored in association with the manual delivery vehicle **100** and/or prepared for a future autonomous delivery (e.g., at a next assigned launch location).

In certain embodiments, the autonomous vehicle **140** may be configured to transmit location information/data to the manual delivery vehicle **100** onboard computing entity, such that the manual delivery vehicle **100** onboard computing entity may track the location of each autonomous vehicle **140** relative to the location of the manual delivery vehicle **100**. In certain embodiments, the autonomous vehicle **140** may be configured to transmit a mayday alert to the manual delivery vehicle **100** if the autonomous vehicle **140** becomes disabled or trapped during an autonomous delivery. In such embodiments, the manual delivery vehicle operator may be informed of the location of the disabled and/or trapped autonomous vehicle **140**, such that the manual delivery vehicle operator may deviate from a planned delivery route to retrieve the autonomous vehicle **140**.

Moreover, in certain embodiments, the manual delivery vehicle **100** onboard computing entity may be configured to monitor the location of the autonomous vehicle **140** relative to manual delivery vehicle **100** to ensure the autonomous vehicle **140** is capable of returning to the manual delivery vehicle **100** (e.g., based on an estimated travel range of the autonomous vehicle **140**). The manual delivery vehicle **100** onboard computing entity may be configured to generate an alert responsive to determining that the manual delivery vehicle **100** is exiting an estimated travel range of the autonomous vehicle **140**, such that the manual delivery vehicle operator may stop the manual delivery vehicle **100** to await the return of the autonomous vehicle **140**.

V. CONCLUSION

Many modifications and other embodiments will come to mind to one skilled in the art to which this disclosure pertains having the benefit of the teachings presented in the foregoing descriptions and the associated drawings. Therefore, it is to be understood that the disclosure is not to be limited to the specific embodiments disclosed and that modifications and other embodiments are intended to be included within the scope of the appended claims. Although specific terms are employed herein, they are used in a generic and descriptive sense only and not for purposes of limitation.

In certain embodiments, a computing system determining whether autonomous delivery is available as discussed herein may be further configured to modify shipping schedules for various computing entities to synchronize deliveries among shipments/items destined for nearby addresses, as discussed in co-pending U.S. patent application Ser. No. 14/988,136, filed on Jan. 5, 2016, the contents of which is incorporated herein by reference in its entirety. For example, responsive to determining that autonomous delivery is unavailable for a shipment/item during an originally scheduled delivery date, the computing entity may query delivery schedules for adjacent delivery dates (e.g., a date before and/or a date after the original delivery date) to determine whether autonomous delivery would be available for the shipment/item if delivered on one of the adjacent delivery dates (e.g., based on the location of deliveries along a defined delivery route for the adjacent delivery dates). Responsive to determining that autonomous delivery would be available on an adjacent delivery date, the computing entity may be configured to modify the service level for the shipment/item (e.g., by speeding up shipment/item by increasing shipping level or by slowing down shipment/item

by decreasing a shipping level) such that the autonomous delivery eligible item is delivered on the identified adjacent delivery date.

The invention claimed is:

1. A method comprising:

identifying, one or more hardware processors, a delivery radius corresponding to at least one item and a delivery destination serviceable point;

determining, by the one or more hardware processors, that an autonomous vehicle delivery time radius corresponding to the delivery radius and the delivery destination serviceable point is below a threshold; and

determining, by the one or more hardware processors and based at least in part on determining that the autonomous vehicle delivery time radius is below the threshold, an autonomous vehicle launch location within the delivery radius for delivering the at least one item via an autonomous vehicle to the delivery destination serviceable point.

2. The method of claim **1**, wherein the autonomous vehicle delivery time radius is determined based at least in part on historical data associated with manual deliveries.

3. The method of claim **1**, wherein the autonomous vehicle launch location is from a ground-based vehicle and along a predefined travel path.

4. The method of claim **3**, wherein the autonomous vehicle delivery time radius is determined based in part on a minimum presence time that the ground-based vehicle is within the delivery radius.

5. The method of claim **1**, further comprising:

identifying a plurality of delivery destination serviceable points within the delivery radius;

determining a total delivery time to the plurality of delivery destination serviceable points; and

determining the autonomous vehicle launch location based on the total delivery time.

6. The method of claim **5**, wherein the total delivery time is based on delivery times associated with delivery along a predefined travel path.

7. One or more non-transitory computer storage media having computer-executable instructions embodied thereon, that when executed by at least one processor, cause the at least one processor to perform operations comprising:

identifying a vehicle delivery route for an item;

determining an autonomous vehicle delivery time radius corresponding to the vehicle delivery route and an autonomous delivery destination serviceable point;

determining, based at least in part on the autonomous vehicle delivery time radius, an amount of time an autonomous vehicle is likely to remain within a boundary associated with the autonomous delivery destination serviceable point; and

determining, based at least in part on the amount of time, an autonomous vehicle launch location along the vehicle delivery route for delivering the item via the autonomous vehicle to the autonomous delivery destination serviceable point.

8. The one or more non-transitory computer storage media of claim **7**, wherein the autonomous vehicle delivery time radius is determined based at least in part on historical data associated with elapsed amounts of time to complete an autonomous delivery from a ground-based delivery vehicle, each of the elapsed amounts of time associated with a distance from the autonomous delivery destination serviceable point.

9. The one or more non-transitory computer storage media of claim **8**, wherein the distance for each of the elapsed amounts of time is a standardized distance from the autonomous delivery destination serviceable point.

10. The one or more non-transitory computer storage media of claim **7**, wherein the autonomous vehicle launch location is within the boundary.

11. The one or more non-transitory computer storage media of claim **7**, wherein the autonomous vehicle delivery time radius corresponds to an amount of time that a ground-based delivery vehicle from which the autonomous vehicle is launched is within a threshold distance from the autonomous delivery destination serviceable point.

12. The one or more non-transitory computer storage media of claim **7**, wherein the autonomous vehicle launch location is determined based on a recipient of the item indicating a preference to autonomous delivery over manual delivery.

13. The one or more non-transitory computer storage media of claim **7**, wherein the autonomous delivery destination serviceable point corresponds to a residence.

14. A system comprising:

one or more processors; and

one or more computer storage memory having computer-executable instructions stored thereon that, when executed by the one or more processors, cause the one or more processors to:

identify an autonomous delivery destination serviceable point for an item;

determine an autonomous vehicle delivery time radius based at least in part on a minimum presence time for an autonomous vehicle within a bounded area surrounding the autonomous delivery destination serviceable point; and

determine, based at least in part on the autonomous vehicle delivery time radius, an autonomous vehicle launch location along a delivery route for delivering the at least one item via the autonomous vehicle to the autonomous delivery destination serviceable point.

15. The system of claim **14**, further comprising identify other autonomous delivery destination serviceable points within the bounded area and determine the minimum presence time for the autonomous vehicle within the bounded area based on the other autonomous delivery destination serviceable points.

16. The system of claim **14**, wherein the autonomous vehicle launch location is from a ground-based vehicle along the delivery route.

17. The system of claim **14**, wherein the autonomous vehicle delivery time radius comprises a first autonomous vehicle delivery time radius corresponding to a first bounded area surrounding the autonomous delivery destination serviceable point and a second autonomous vehicle delivery time radius corresponding to a second bounded area surrounding the autonomous delivery destination serviceable point, the first bounded area being larger than the second bounded area.

* * * * *