US012409931B2

(12) **United States Patent**
**Alley et al.**

(10) **Patent No.: US 12,409,931 B2**
(45) **Date of Patent: *Sep. 9, 2025**

(54) **LANDING GEAR SHRINK LINK MECHANISM**

(71) Applicant: **The Boeing Company**, Chicago, IL (US)

(72) Inventors: **Christopher M. Alley**, Seattle, WA (US); **Leanne M. Campbell**, Snohomish, WA (US); **Gabriela K. Defrancisci**, Edmonds, WA (US); **Gregory J. Vering**, Seattle, WA (US); **Aaron P. Knock**, Seattle, WA (US); **Mitchell Mellor**, Bothell, WA (US); **Justin D. Cottet**, Snohomish, WA (US)

(73) Assignee: **The Boeing Company**, Arlington, VA (US)

( * ) Notice: Subject to any disclaimer, the term of this patent is extended or adjusted under 35 U.S.C. 154(b) by 191 days.

This patent is subject to a terminal disclaimer.

(21) Appl. No.: **18/329,723**

(22) Filed: **Jun. 6, 2023**

(65) **Prior Publication Data**

US 2023/0322369 A1 Oct. 12, 2023

**Related U.S. Application Data**

(63) Continuation of application No. 17/188,198, filed on Mar. 1, 2021, now Pat. No. 11,708,151, which is a (Continued)

(51) **Int. Cl.**
***B64C 25/20*** (2006.01)
***B64C 25/12*** (2006.01)
(Continued)

(52) **U.S. Cl.**
CPC ..... ***B64C 25/20*** (2013.01); ***B64C 25/12*** (2013.01); ***B64C 25/60*** (2013.01); *B64C 2025/008* (2013.01)

(58) **Field of Classification Search**
CPC ..... B64C 25/18; B64C 25/20; B64C 25/22; B64C 25/60; B64C 2025/008
See application file for complete search history.

(56) **References Cited**

U.S. PATENT DOCUMENTS

2,256,540 A 9/1941 Armstrong
2,420,066 A 5/1947 Conway
(Continued)

FOREIGN PATENT DOCUMENTS

EP 0246949 5/1987
EP 2138398 12/2009
(Continued)

OTHER PUBLICATIONS

Torsion Sway Bar; dated Apr. 1, 2021; https://carlisuspension.com/product/dodge/dodge-ram-2500-3500/ram-components/13-18-3500-components/torsion-sway-bar/.
(Continued)

*Primary Examiner* — Joseph W Sanderson

(57) **ABSTRACT**

A landing gear including an outer cylinder, a shock strut assembly, and a passive shrink mechanism. The outer cylinder is coupled to a frame of an aircraft about a trunnion axis of rotation. The shock strut assembly is coupled to the outer cylinder for reciprocation along a longitudinal axis of the outer cylinder. The passive shrink mechanism includes: a first shrink link member coupled to the outer cylinder, a second shrink link member coupling the first shrink link member to the shock strut assembly, a crank member coupled to the outer cylinder, a first connecting link coupling the crank member to a walking beam of a landing gear retract mechanism, and a second connecting link coupling the crank member to the first shrink link member. The passive shrink mechanism is passively extended and short-
(Continued)

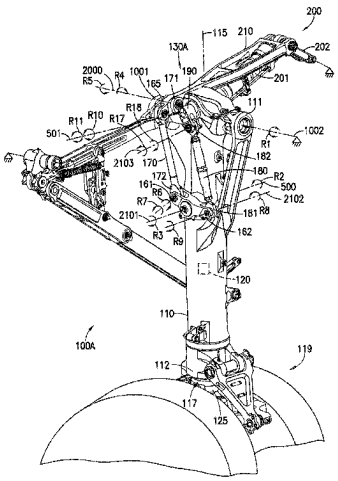

ened through actuation of the landing gear retract mechanism with deployment and retraction of the landing gear.

**20 Claims, 38 Drawing Sheets**

**Related U.S. Application Data**

continuation of application No. 16/049,090, filed on Jul. 30, 2018, now Pat. No. 10,981,646.

(51) **Int. Cl.**
***B64C 25/60*** (2006.01)
*B64C 25/00* (2006.01)

(56) **References Cited**

U.S. PATENT DOCUMENTS

| | | | | |
|---|---|---|---|---|
| 2,461,595 | A * | 2/1949 | Foster | B64C 25/20 244/102 R |
| 2,467,015 | A * | 4/1949 | Dreifke | B64C 25/20 244/102 R |
| 2,478,729 | A * | 8/1949 | Westcott, Jr. | B64C 25/20 244/102 SS |
| 2,754,072 | A | 7/1956 | Shapiro | |
| 2,868,482 | A * | 1/1959 | Westcott, Jr. | B64C 25/10 244/102 R |
| 2,933,271 | A | 4/1960 | Maltby | |
| 2,967,682 | A | 1/1961 | Fullam et al. | |
| 3,514,057 | A * | 5/1970 | Biggs | B64C 25/20 244/102 R |
| 3,533,580 | A * | 10/1970 | Rene | B64C 25/20 244/102 R |
| 3,870,254 | A * | 3/1975 | Watts | B64C 25/26 244/102 SL |
| 4,540,142 | A | 9/1985 | Veaux et al. | |
| 4,586,682 | A * | 5/1986 | Veaux | B64C 25/20 244/102 R |
| 4,749,152 | A | 6/1988 | Veaux et al. | |
| 4,907,760 | A * | 3/1990 | Sealey | B64C 25/60 244/102 R |
| 5,100,083 | A | 3/1992 | Large et al. | |
| 5,299,761 | A | 4/1994 | Robin et al. | |
| 5,429,323 | A | 7/1995 | Derrien et al. | |
| 5,460,340 | A | 10/1995 | White | |
| 5,482,228 | A | 1/1996 | Hoshino | |
| 6,182,925 | B1 | 2/2001 | Kilner et al. | |
| 8,376,272 | B2 | 2/2013 | Bennett et al. | |
| 8,448,900 | B2 | 5/2013 | Mellor et al. | |
| 8,991,753 | B2 | 3/2015 | Mellor et al. | |
| 8,998,133 | B2 | 4/2015 | Cottet | |
| 9,481,452 | B2 | 11/2016 | Lindahl et al. | |
| 9,499,280 | B2 | 11/2016 | Mellor | |
| 9,868,518 | B2 * | 1/2018 | Elliott | B64C 25/34 |
| 10,384,767 | B2 | 8/2019 | Cottet et al. | |
| 10,442,527 | B2 * | 10/2019 | Bennett | B64C 25/60 |
| 10,486,798 | B2 * | 11/2019 | Cottet | B64C 25/60 |
| 10,569,862 | B2 * | 2/2020 | Bennett | B64C 25/20 |
| 10,766,608 | B2 | 9/2020 | Mellor et al. | |
| 10,800,516 | B2 | 10/2020 | Dahl et al. | |
| 10,981,646 | B2 * | 4/2021 | Alley | B64C 25/60 |
| 11,407,500 | B2 * | 8/2022 | Schmidt | B64C 25/12 |
| 11,572,158 | B2 * | 2/2023 | Dahl | B64C 25/20 |
| 11,708,151 | B2 * | 7/2023 | Alley | B64C 25/58 244/102 R |
| 11,827,342 | B2 * | 11/2023 | Dahl | B64C 25/04 |
| 2009/0050736 | A1 | 2/2009 | Bennett et al. | |
| 2009/0321560 | A1 | 12/2009 | Luce et al. | |
| 2010/0116930 | A1 | 5/2010 | Griffin | |
| 2010/0181423 | A1 | 7/2010 | Martin et al. | |
| 2010/0219290 | A1 | 9/2010 | Luce | |
| 2010/0288878 | A1 | 11/2010 | Bennett | |
| 2011/0233327 | A1 | 9/2011 | Mellor et al. | |
| 2013/0341457 | A1 | 12/2013 | Wilson | |
| 2016/0052623 | A1 * | 2/2016 | Elliott | B64C 25/18 244/102 R |
| 2017/0253323 | A1 | 9/2017 | Green et al. | |
| 2018/0001998 | A1 | 1/2018 | Bennett | |
| 2018/0162522 | A1 | 6/2018 | Luce | |
| 2018/0208298 | A1 | 7/2018 | Cottet et al. | |
| 2018/0244371 | A1 * | 8/2018 | Simpson | B64C 25/10 |
| 2018/0244372 | A1 * | 8/2018 | Simpson | B64C 25/20 |
| 2018/0244373 | A1 * | 8/2018 | Mellor | B64C 25/20 |
| 2018/0297694 | A1 * | 10/2018 | Cottet | B64C 25/34 |
| 2018/0346102 | A1 * | 12/2018 | Dahl | B64C 25/34 |
| 2019/0039723 | A1 | 2/2019 | Dubrovsky et al. | |
| 2019/0185147 | A1 | 6/2019 | Luce | |

FOREIGN PATENT DOCUMENTS

| | | |
|---|---|---|
| EP | 2489591 | 8/2012 |
| EP | 3213992 | 9/2017 |
| EP | 3335988 | 6/2018 |
| EP | 3437990 | 2/2019 |
| FR | 2686857 | 8/1993 |
| GB | 484938 | 5/1938 |
| GB | 610698 | 10/1948 |
| GB | 670889 | 4/1952 |
| GB | 1216732 | 12/1970 |
| GB | 2137147 | 10/1984 |
| JP | 54022679 | 8/1979 |
| JP | 60071394 | 4/1985 |
| JP | 06008886 | 1/1994 |
| JP | 06219394 | 8/1994 |
| JP | 08338045 | 12/1996 |
| JP | 2011504829 | 2/2011 |
| JP | 2012111479 | 6/2012 |
| WO | 2006094145 | 9/2006 |
| WO | 2009047367 | 4/2009 |
| WO | 2011119283 | 9/2011 |

OTHER PUBLICATIONS

CE-9900XJF—XJ/MJ Antirock Front Sway Bar Kit; dated Apr. 1, 2021; https://www.rockjock4x4.com/CE-9900XJF.

* cited by examiner

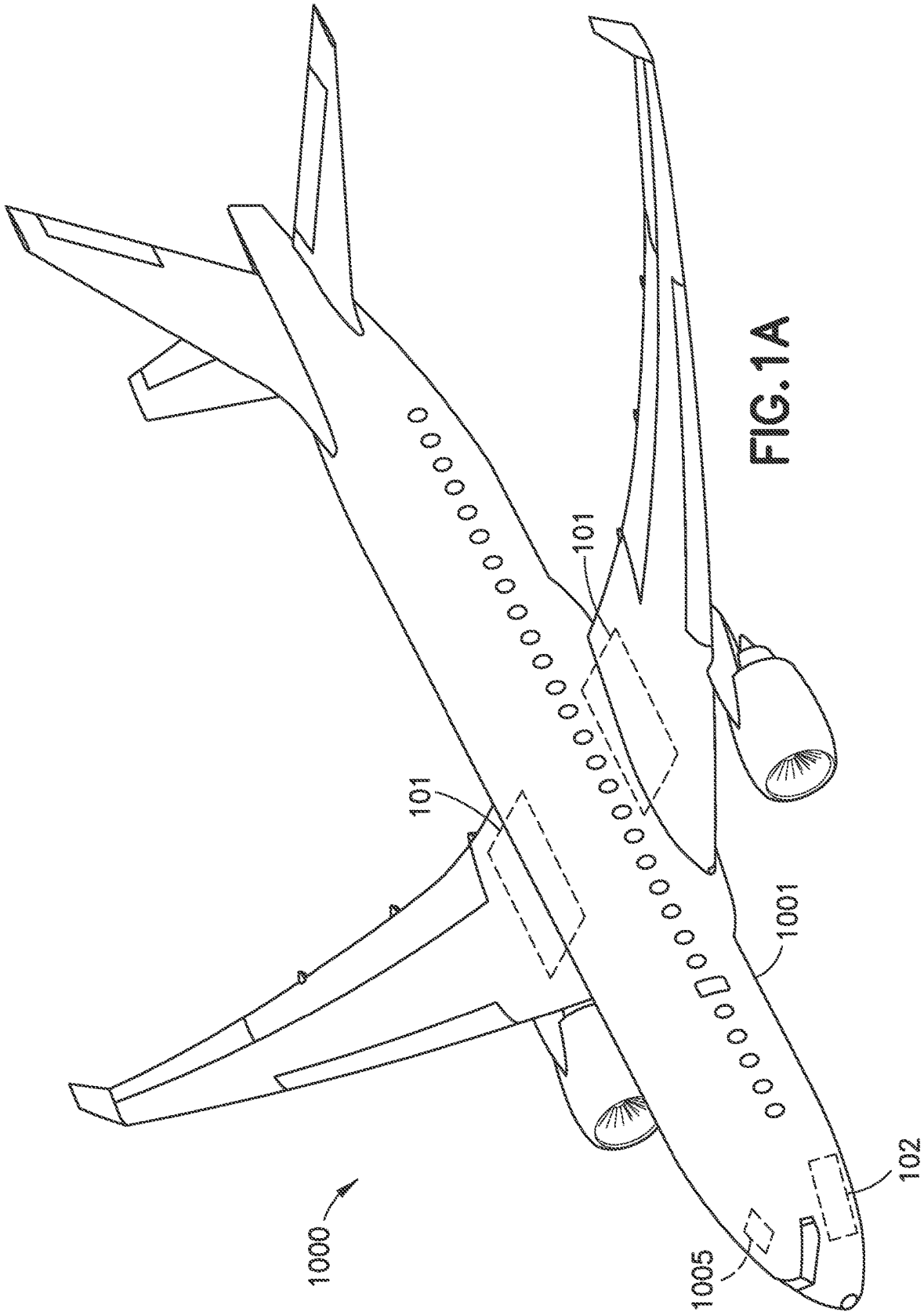


FIG. 1A

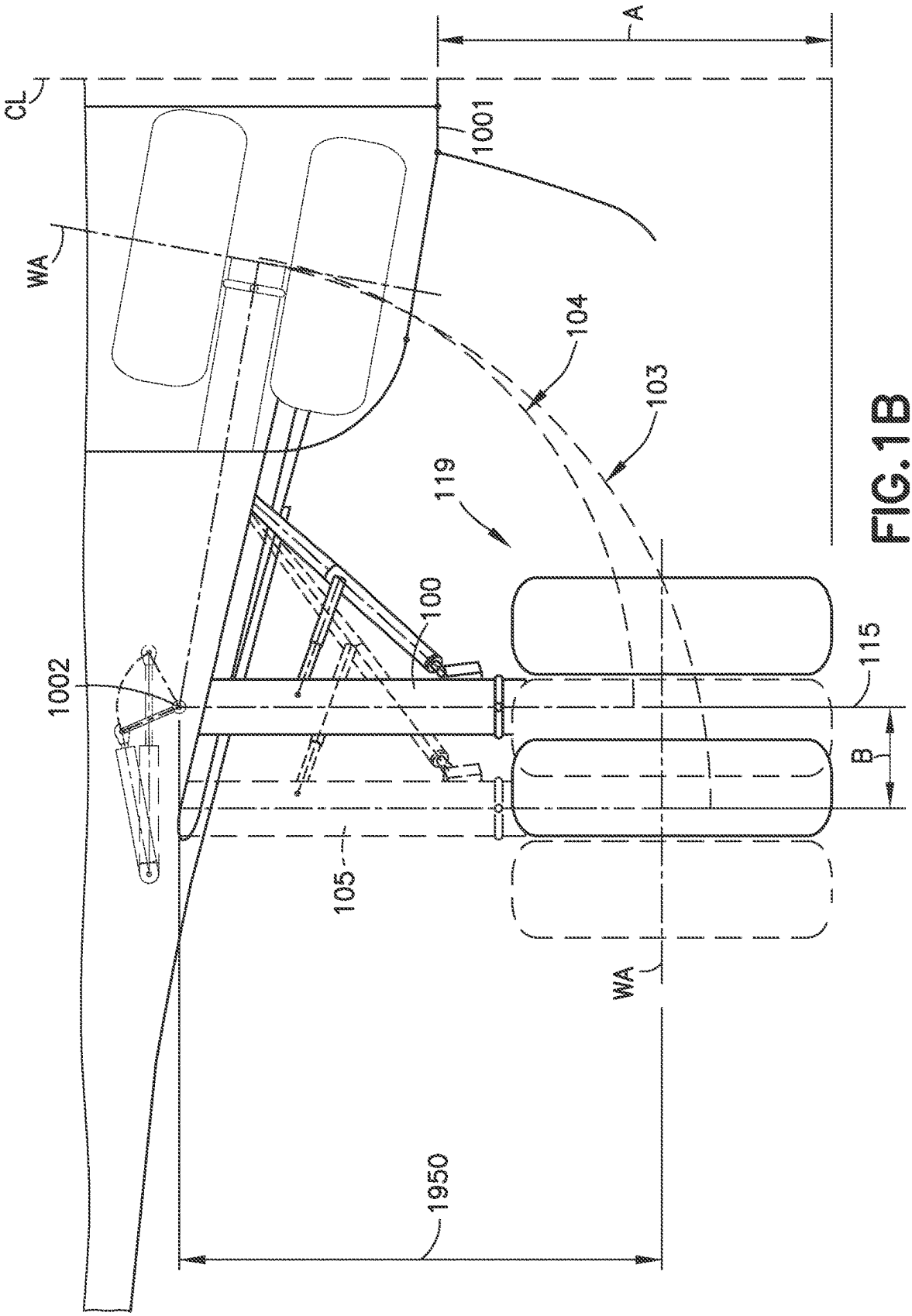


FIG. 1B

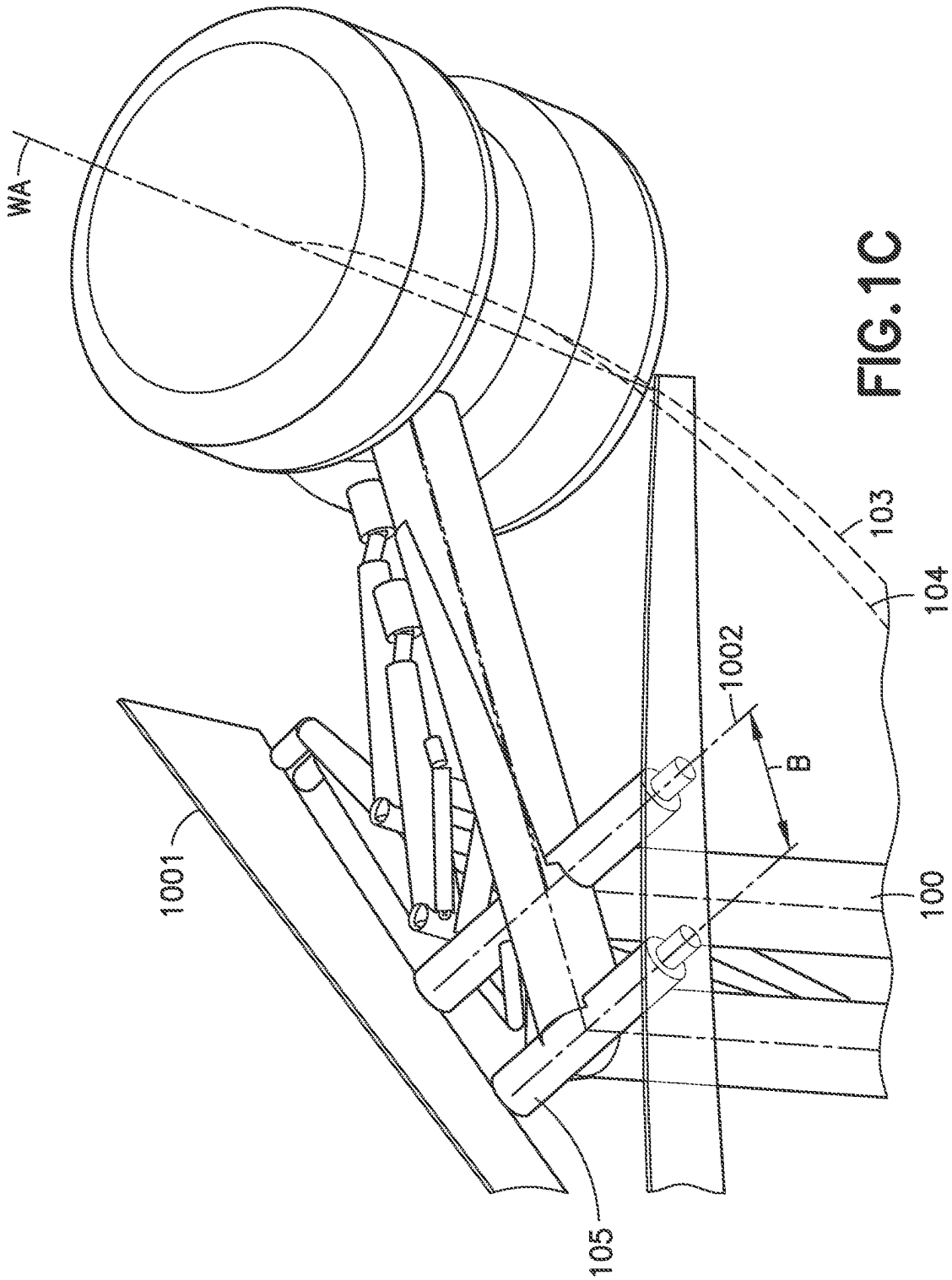


FIG. 1C

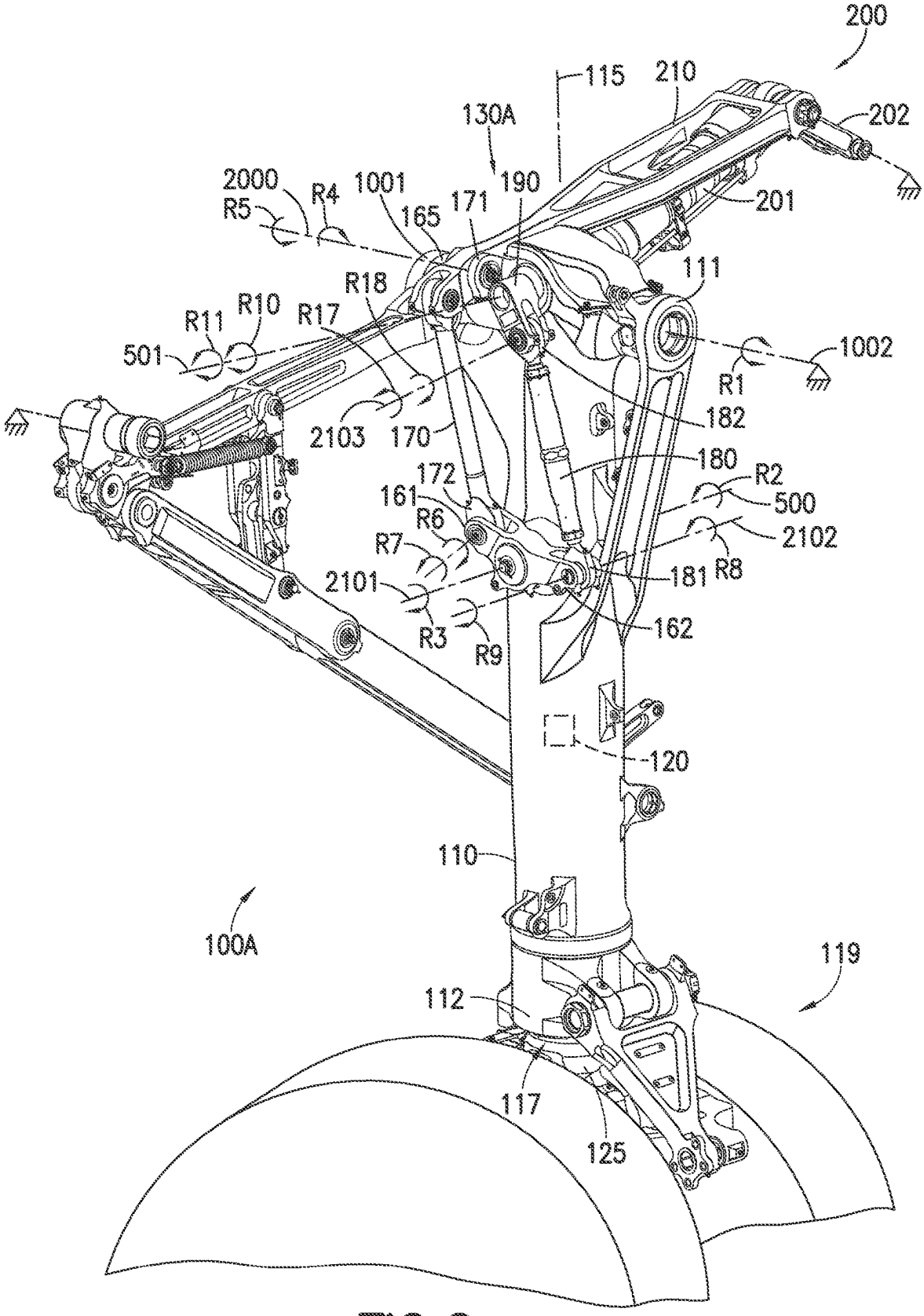
200
115
210
202
130A
2000
R4
1001
190
R5
165
171
201
111
R18
R10
R11
R17
501
1002
R1
182
2103
170
180
172
R2
161
500
R6
2102
R7
181
R8
2101
162
R3
R9
120
110
100A
119
112
117
125

FIG.2

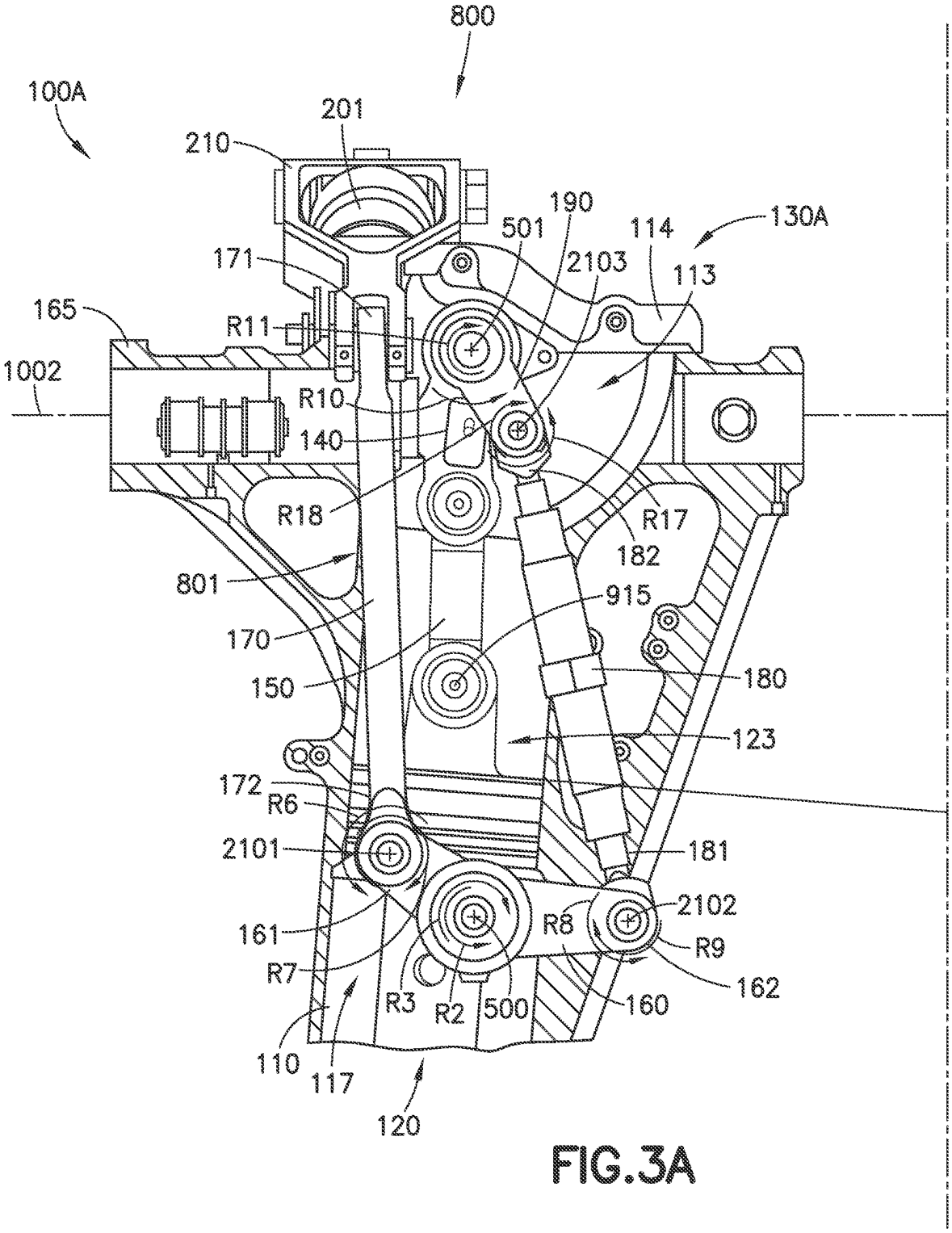
800
100A
201
210
190
501
114
130A
171
2103
113
165
R11
1002
R10
140
R18
R17
182
801
915
170
150
180
123
172
R6
2101
181
2102
161
R8
R9
R7
162
R3
R2
500
160
110
117
120

FIG.3A

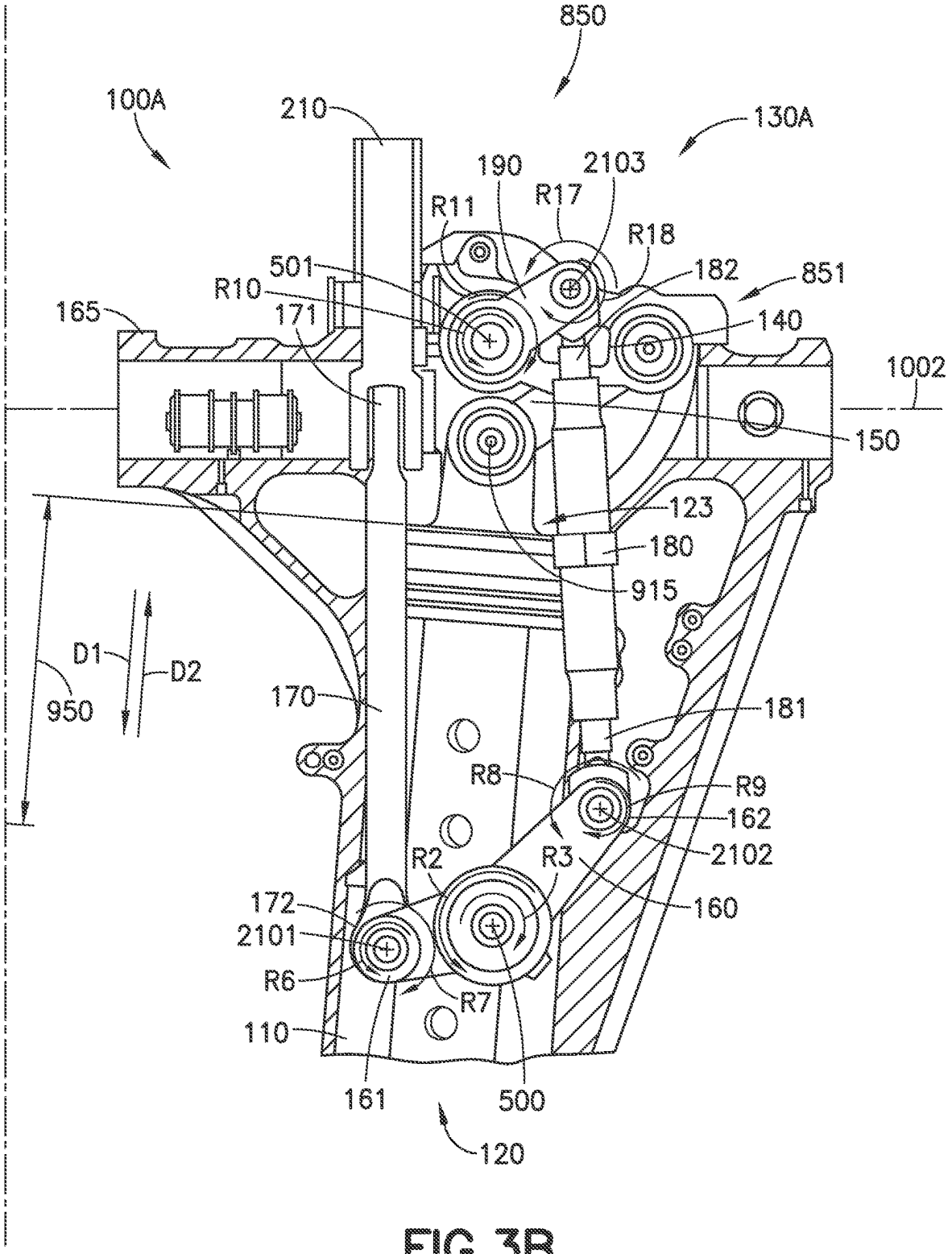
850
100A
210
130A
190
2103
R11
R17
R18
501
182
851
R10
165
171
140
1002
150
123
180
915
D1
D2
950
170
181
R8
R9
162
2102
R2
R3
160
172
2101
R6
R7
110
161
500
120

FIG.3B

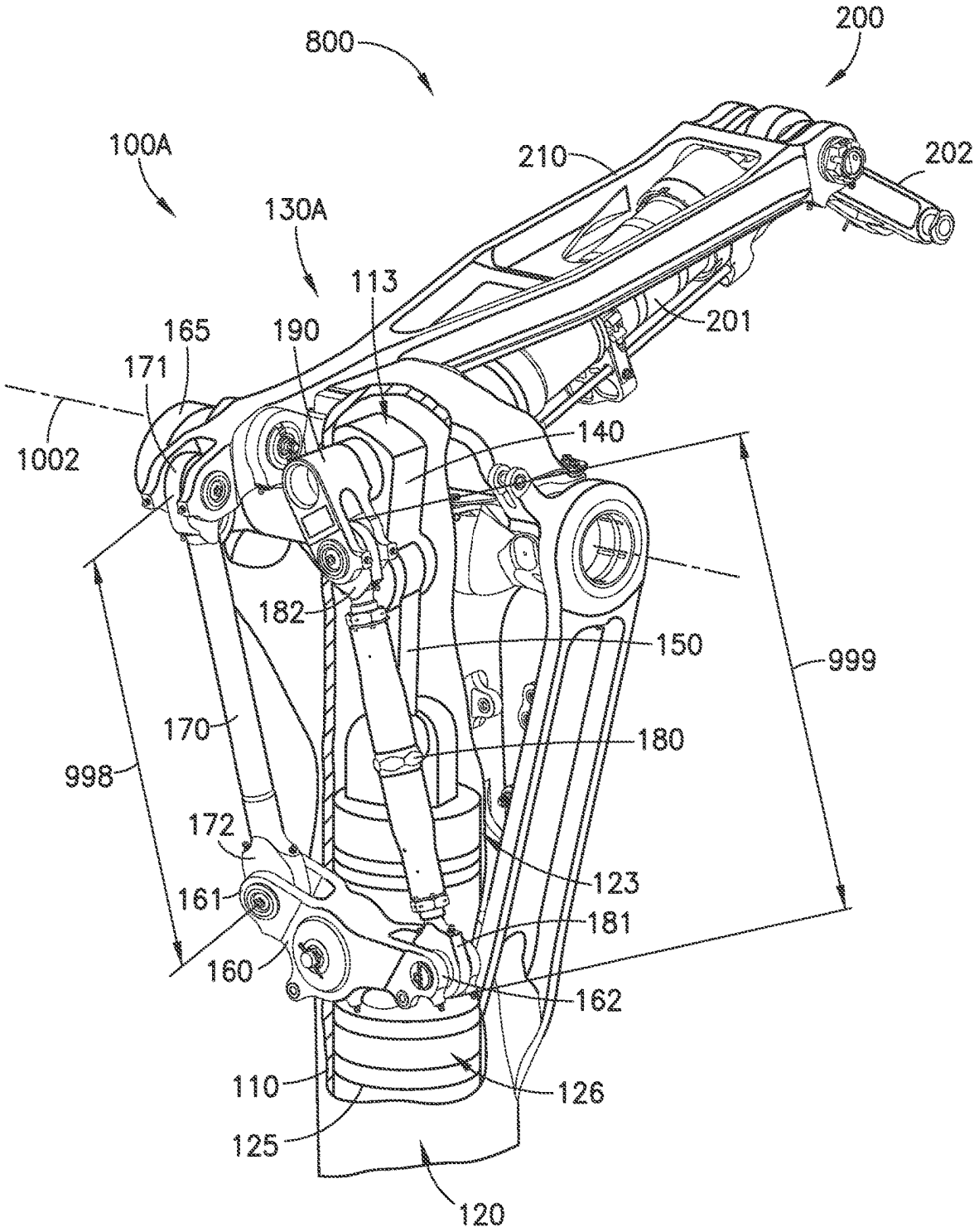
800
200
100A
210
202
130A
113
201
165
190
171
1002
140
182
150
999
170
180
998
172
123
161
181
160
162
110
126
125
120

FIG.4

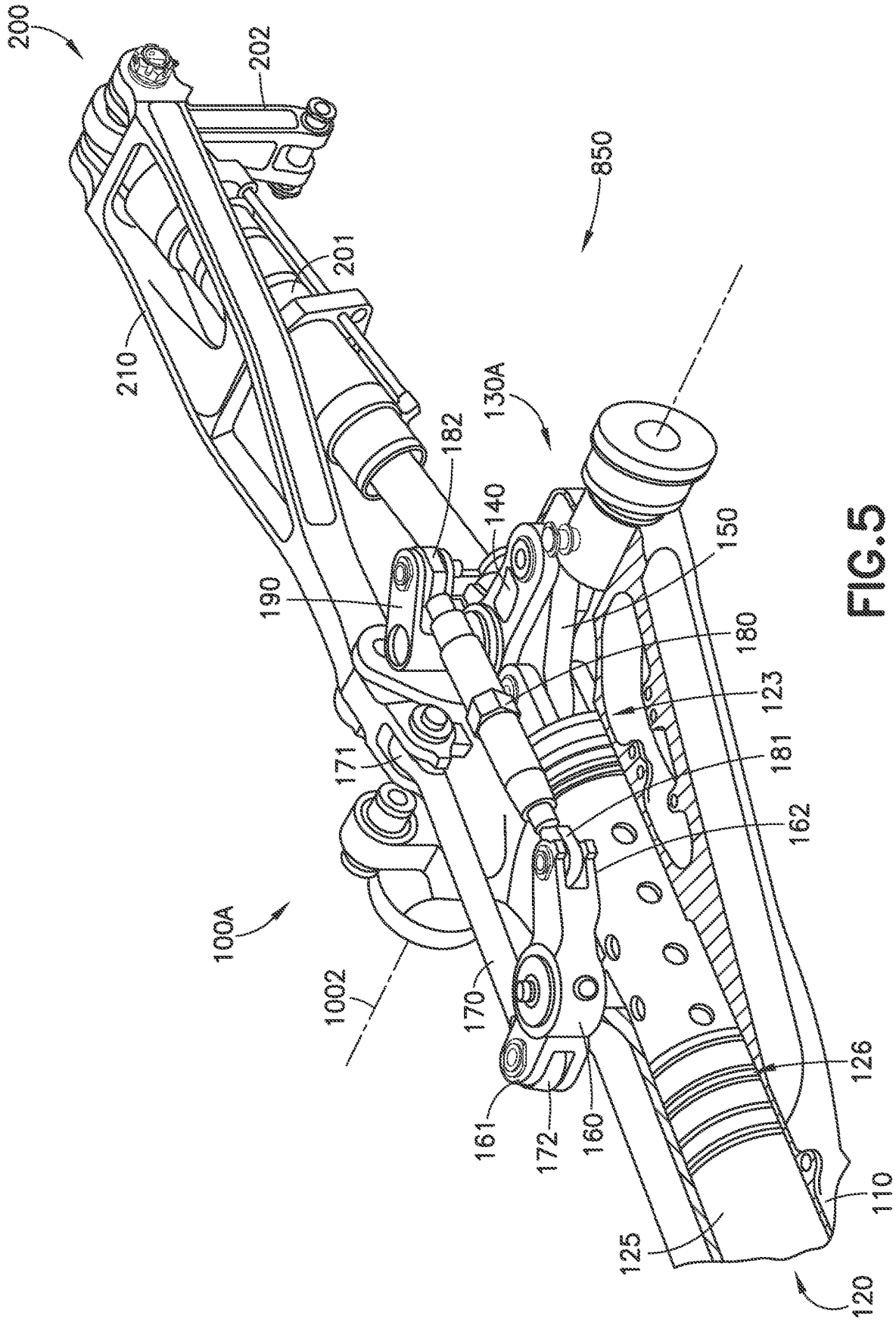
200
202
850
201
210
130A
182
140
150
190
180
123
171
181
162
100A
1002
170
126
161
172
160
110
125
120

FIG.5

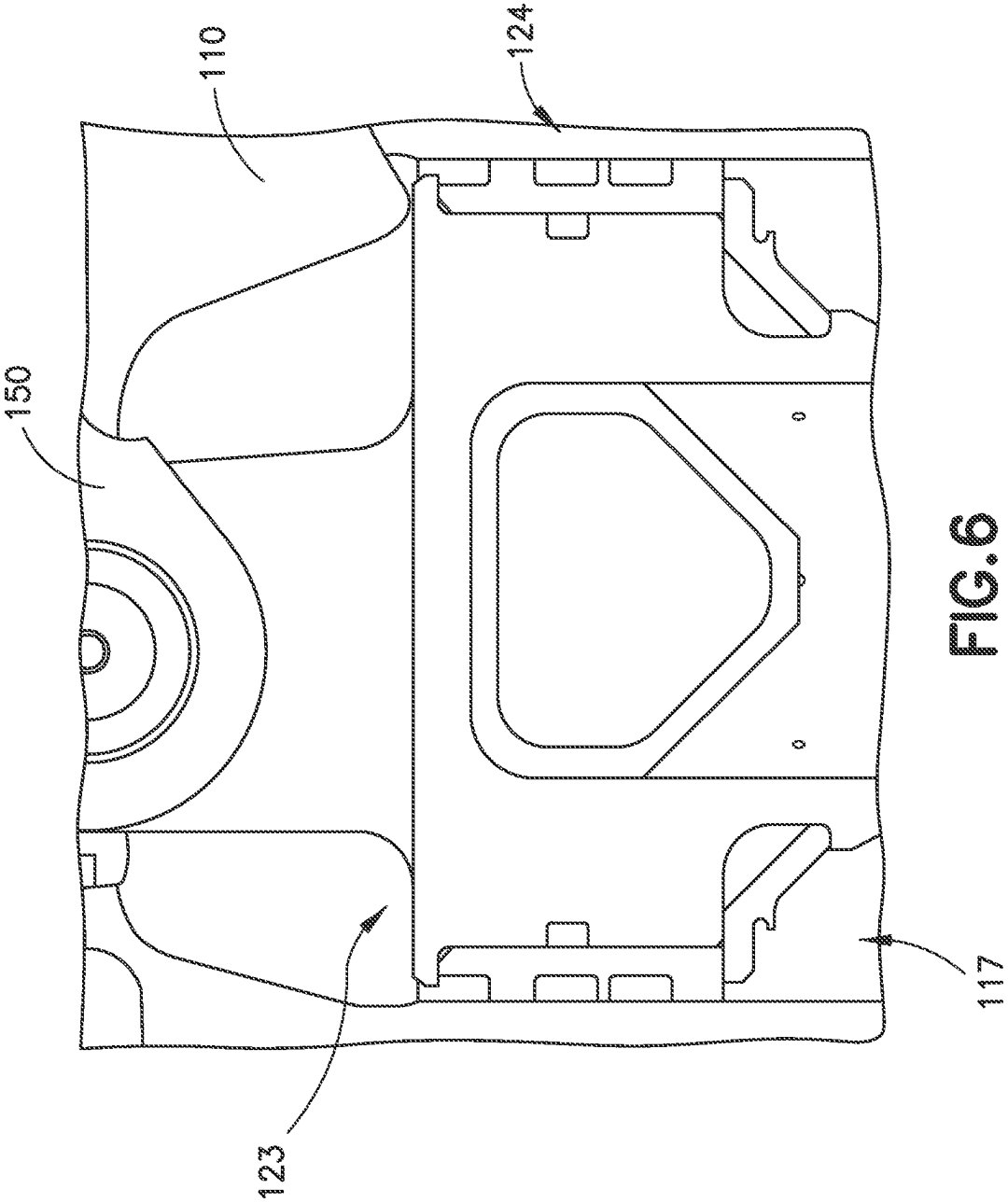


FIG.6

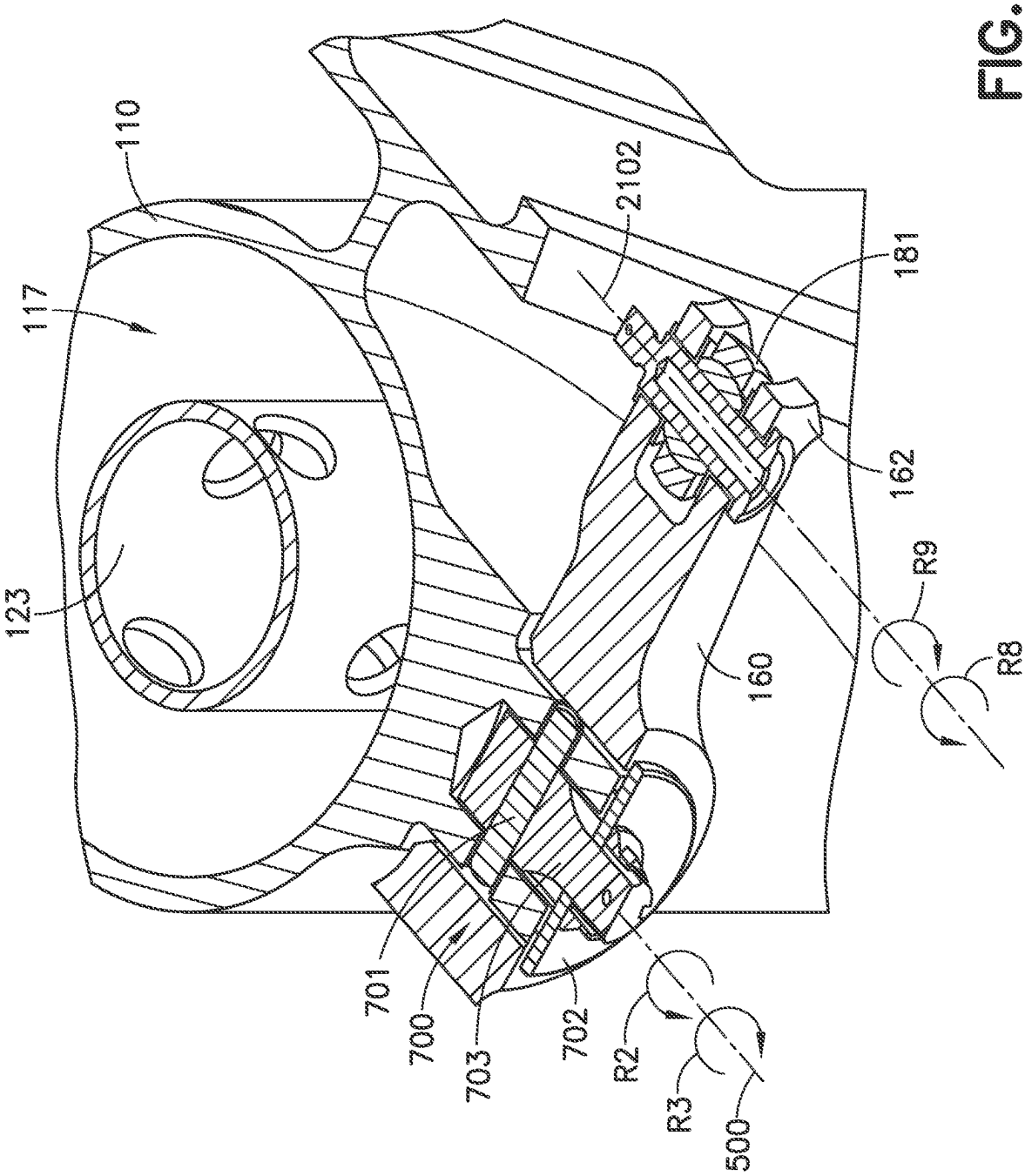


FIG.7

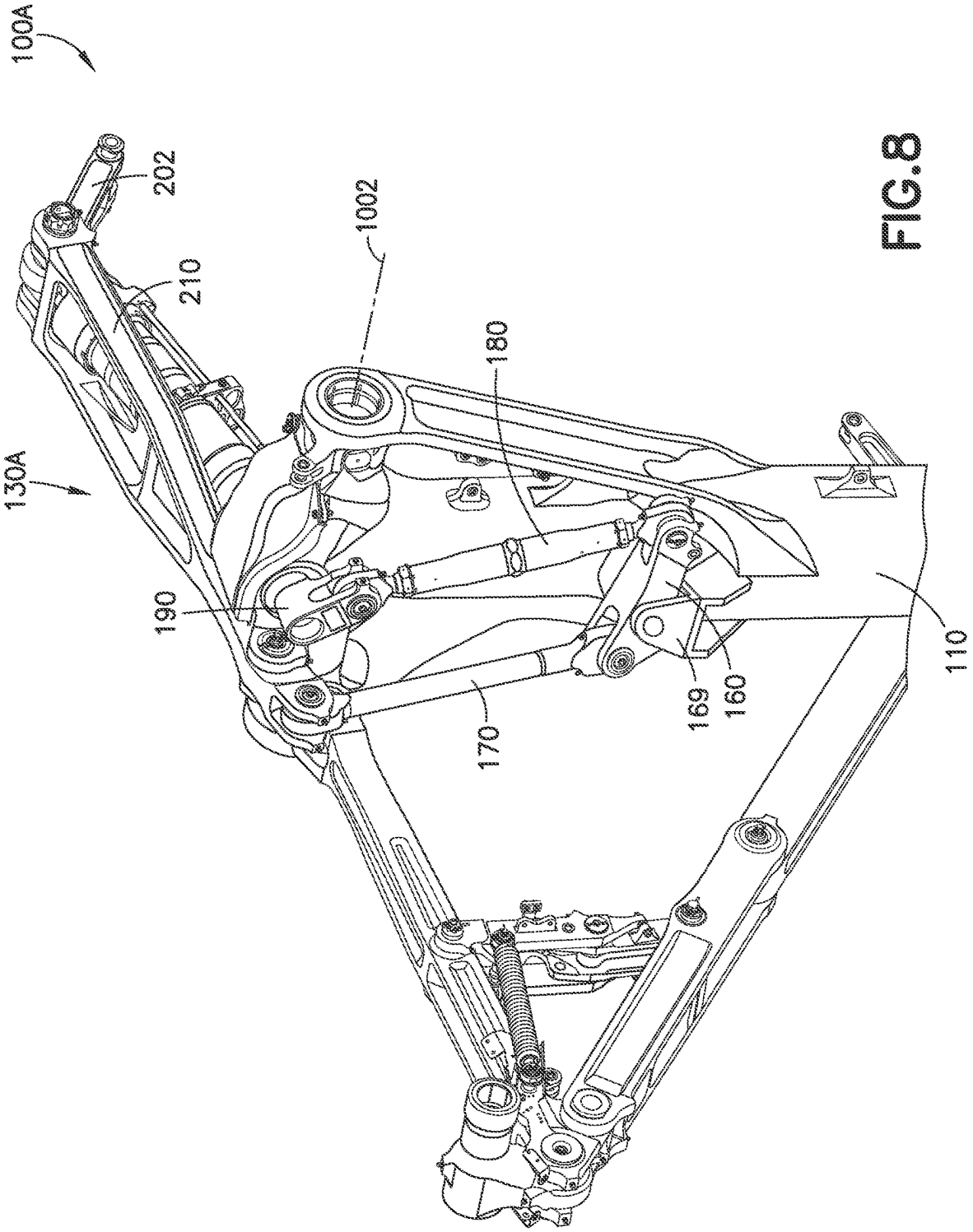


FIG.8

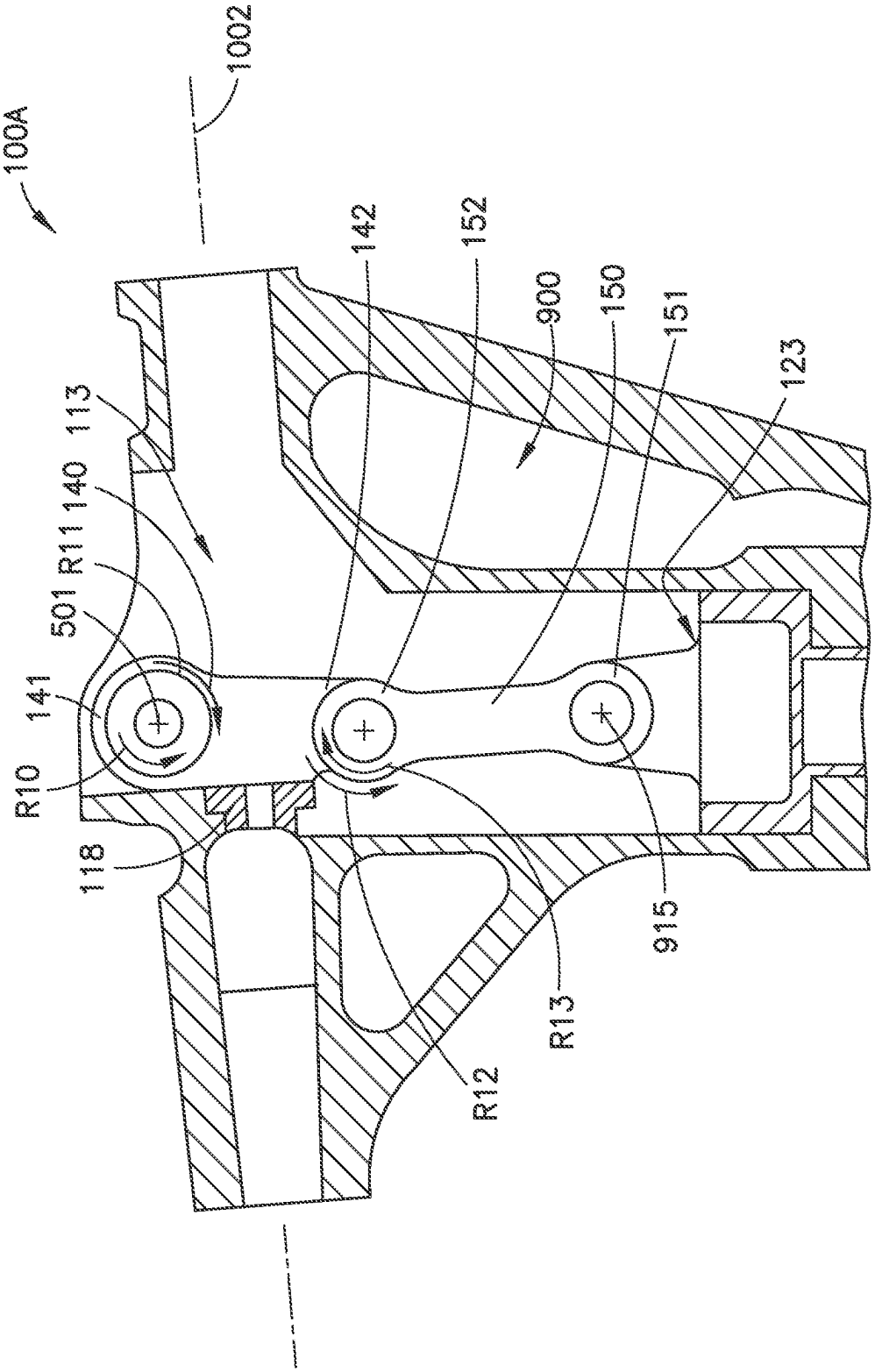
100A
1002
113
140
R11
501
141
R10
118
142
152
900
150
151
123
R12
R13
915

FIG.9

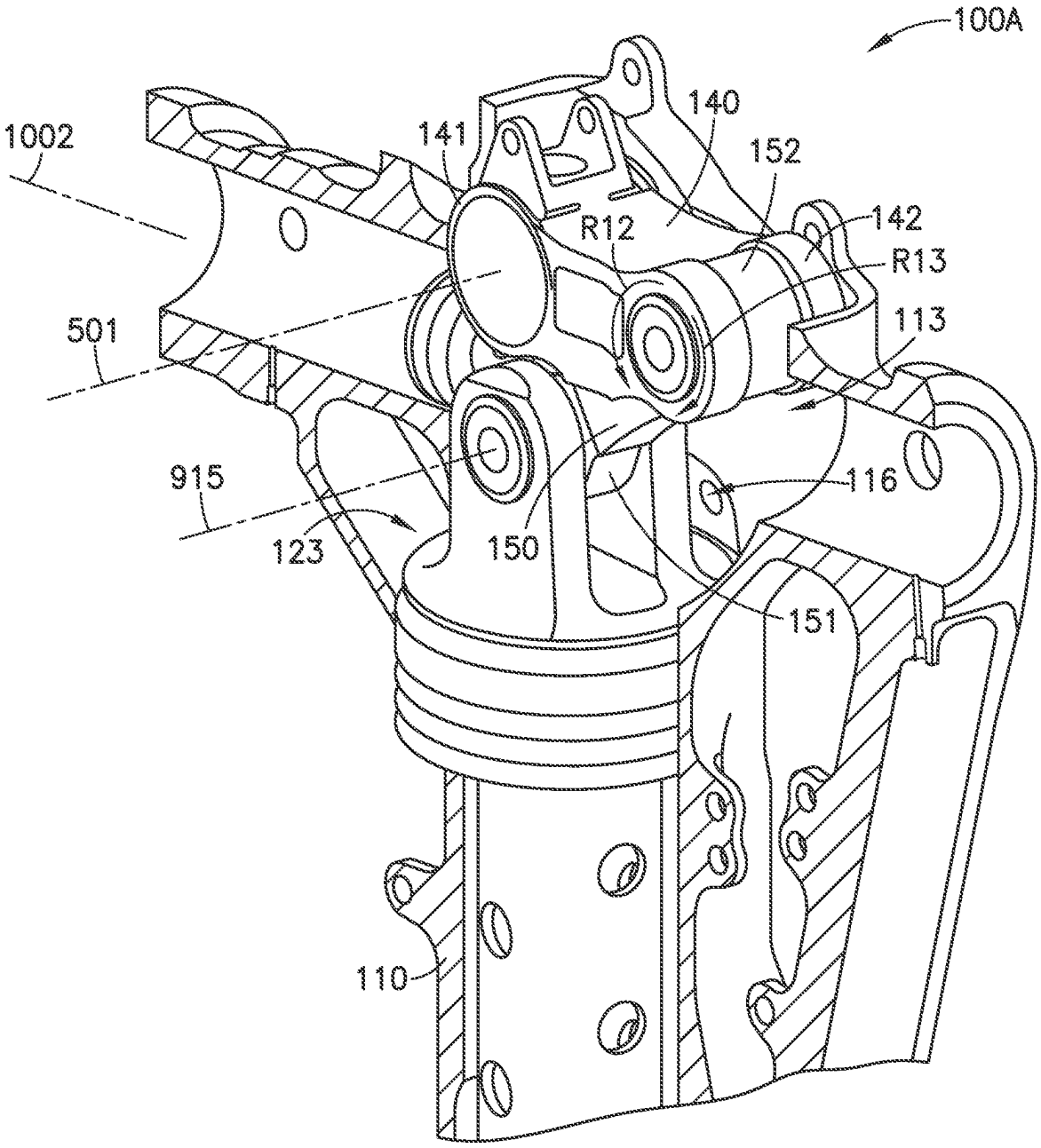
100A
1002
141
140
152
142
R12
R13
501
113
915
116
123
150
151
110

FIG.10

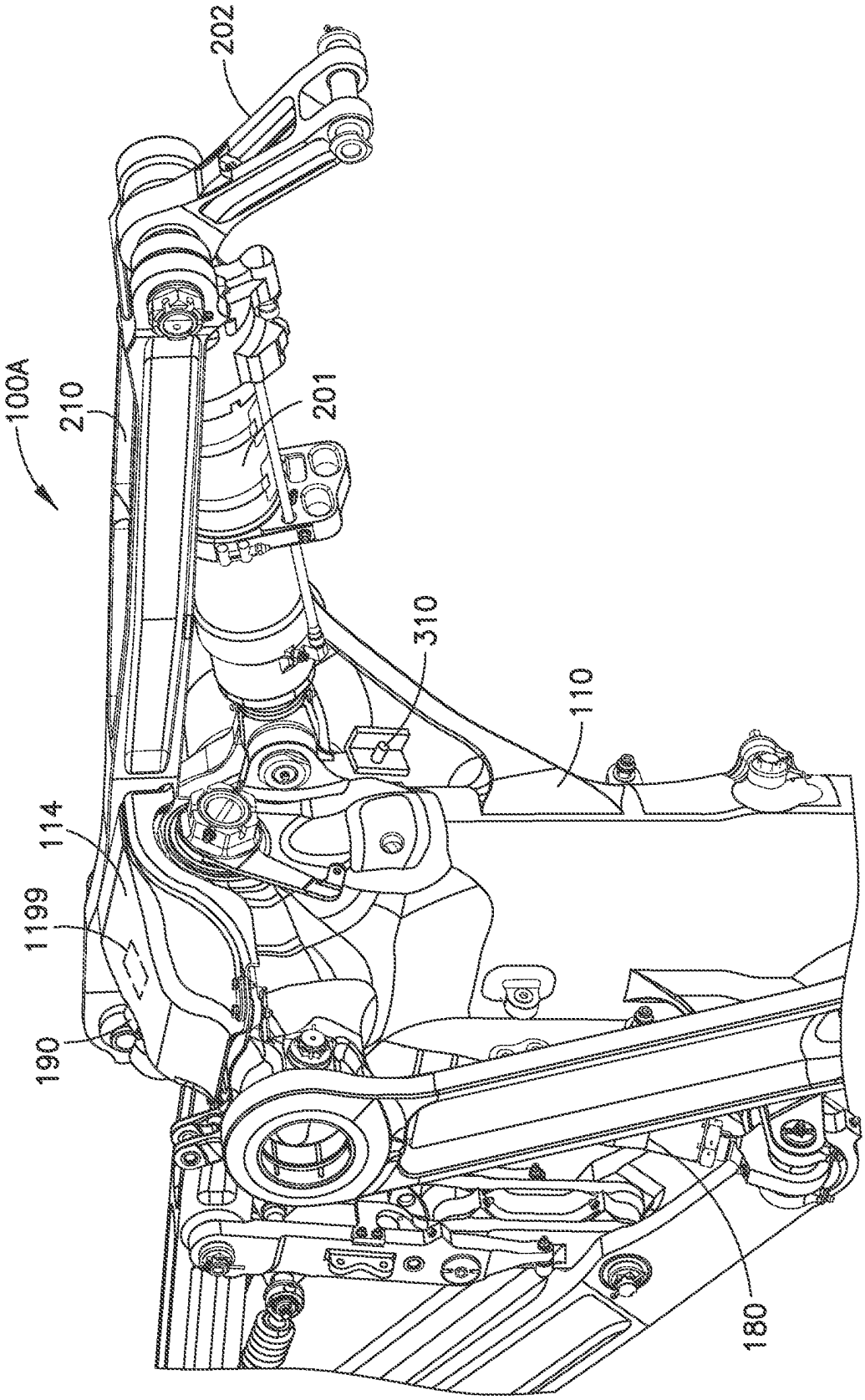


FIG. 11

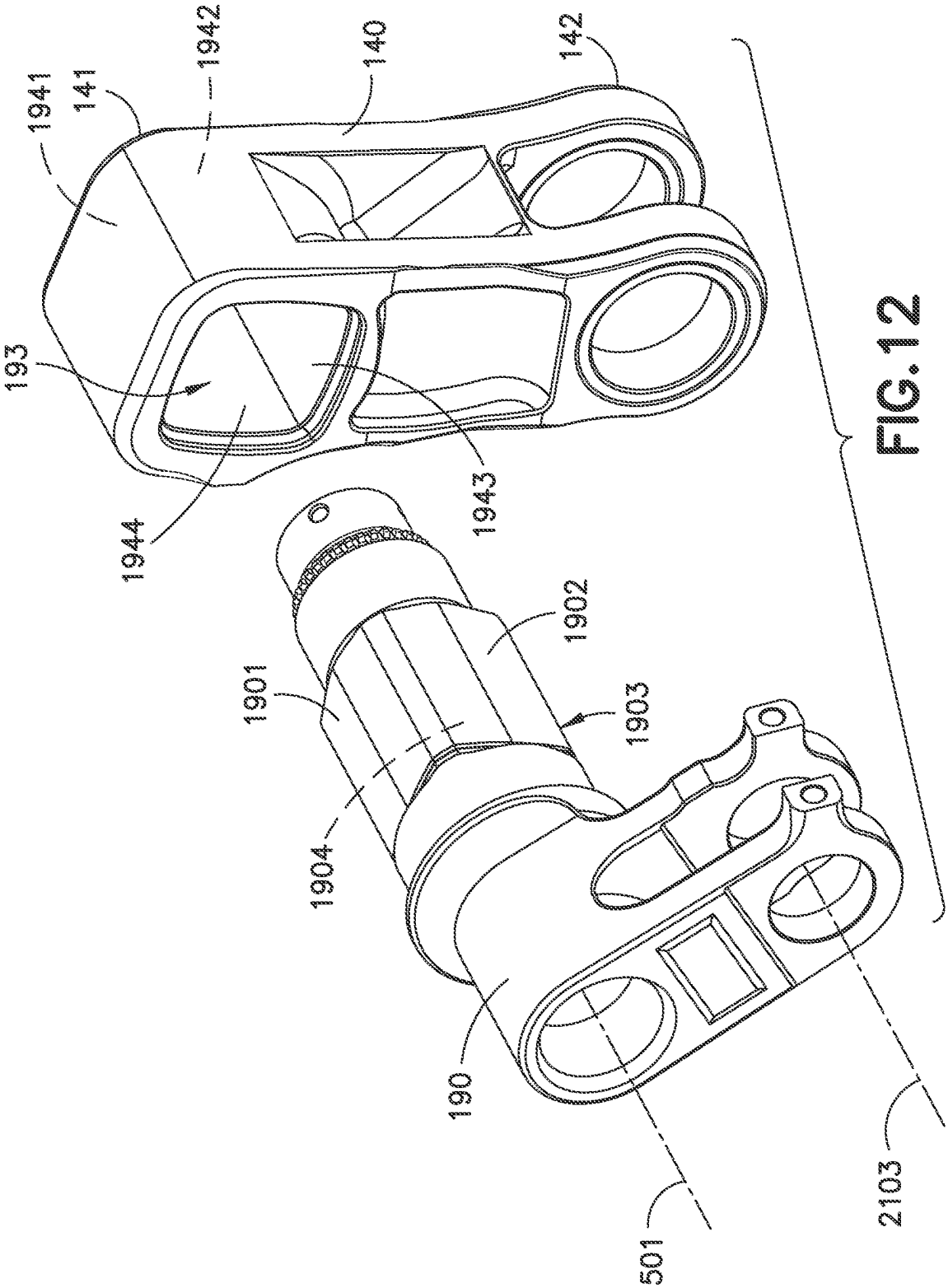
1941
141
1942
140
142
193
1944
1943
1901
1902
1903
1904
190
501
2103

FIG. 12

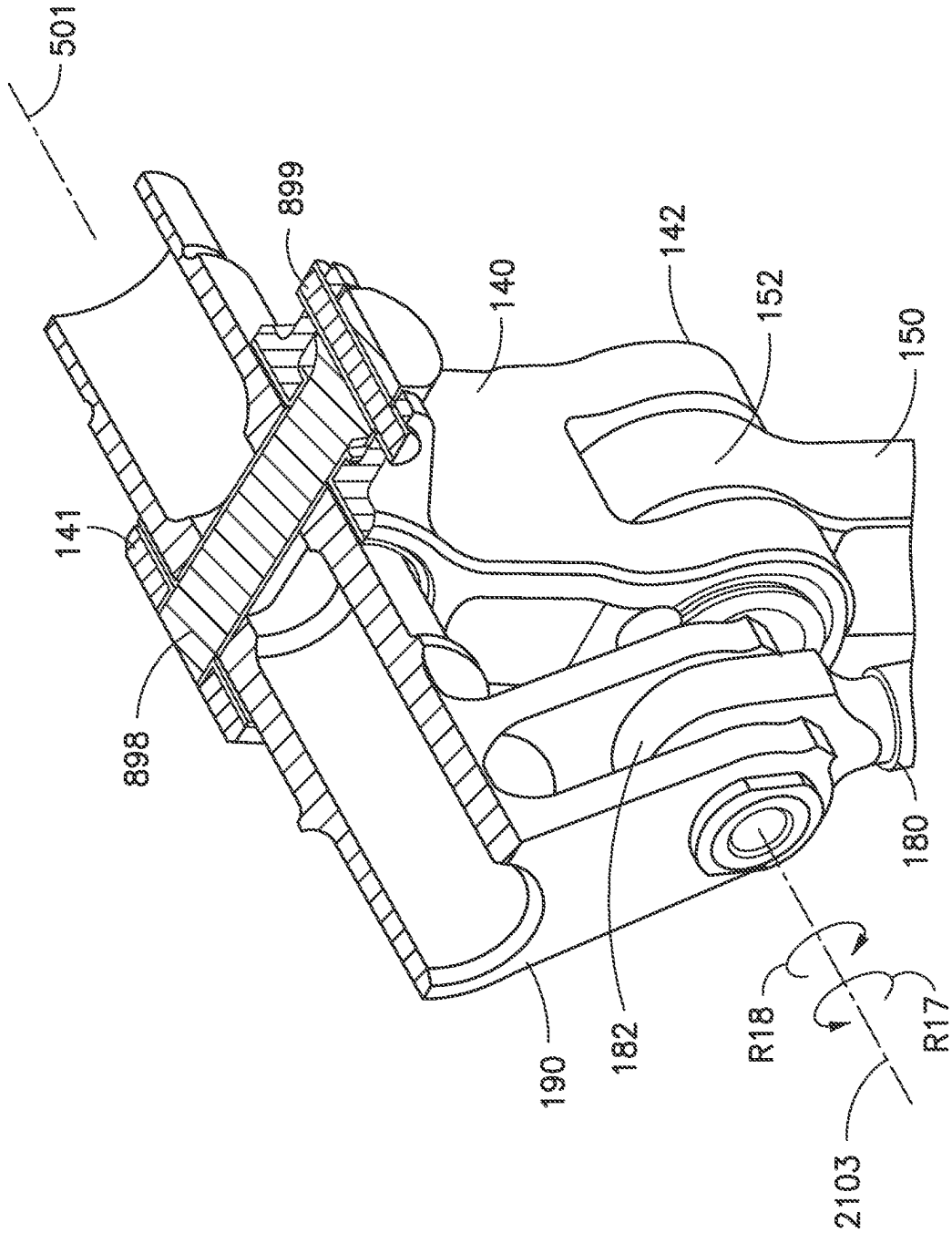


FIG.13

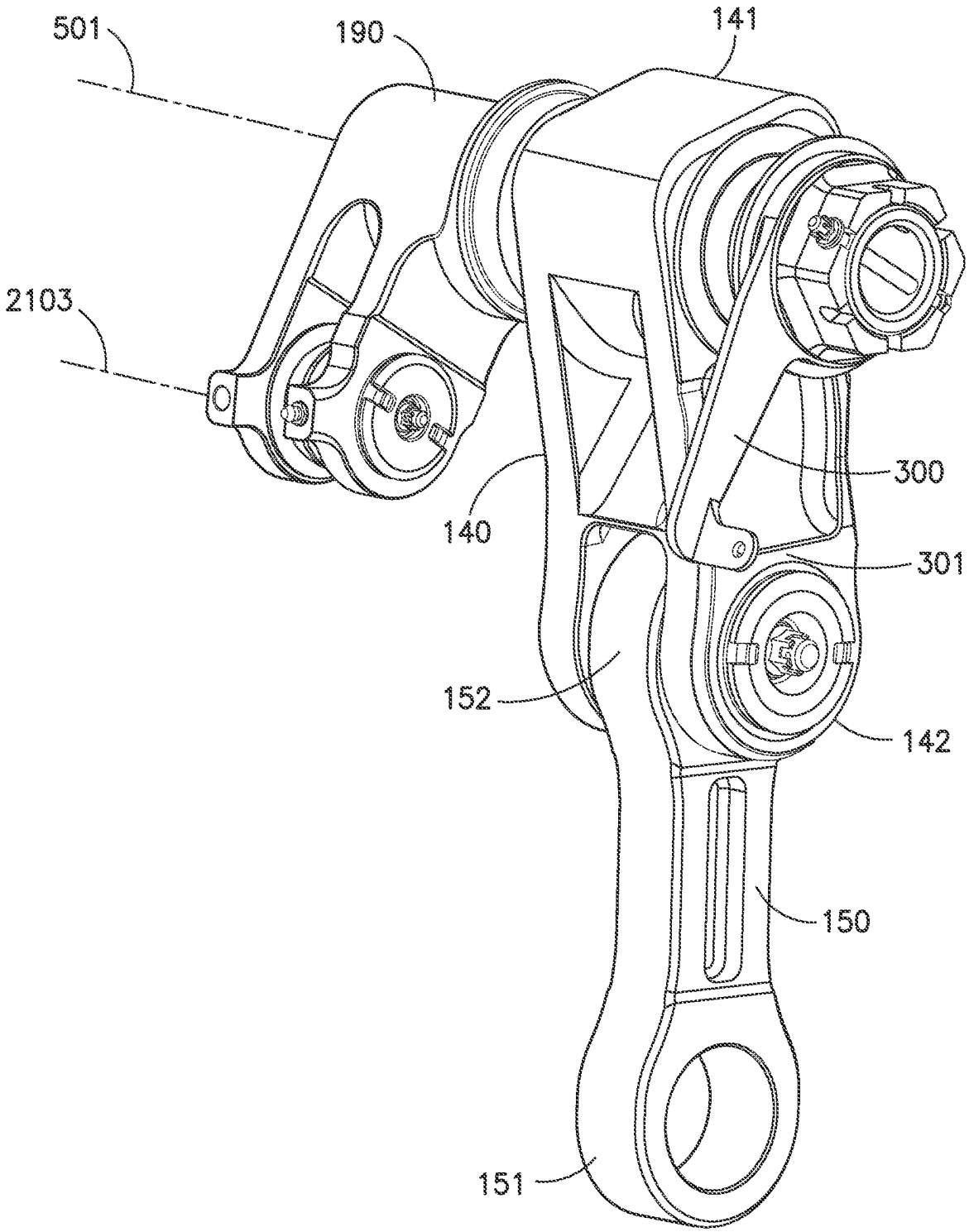


FIG.14

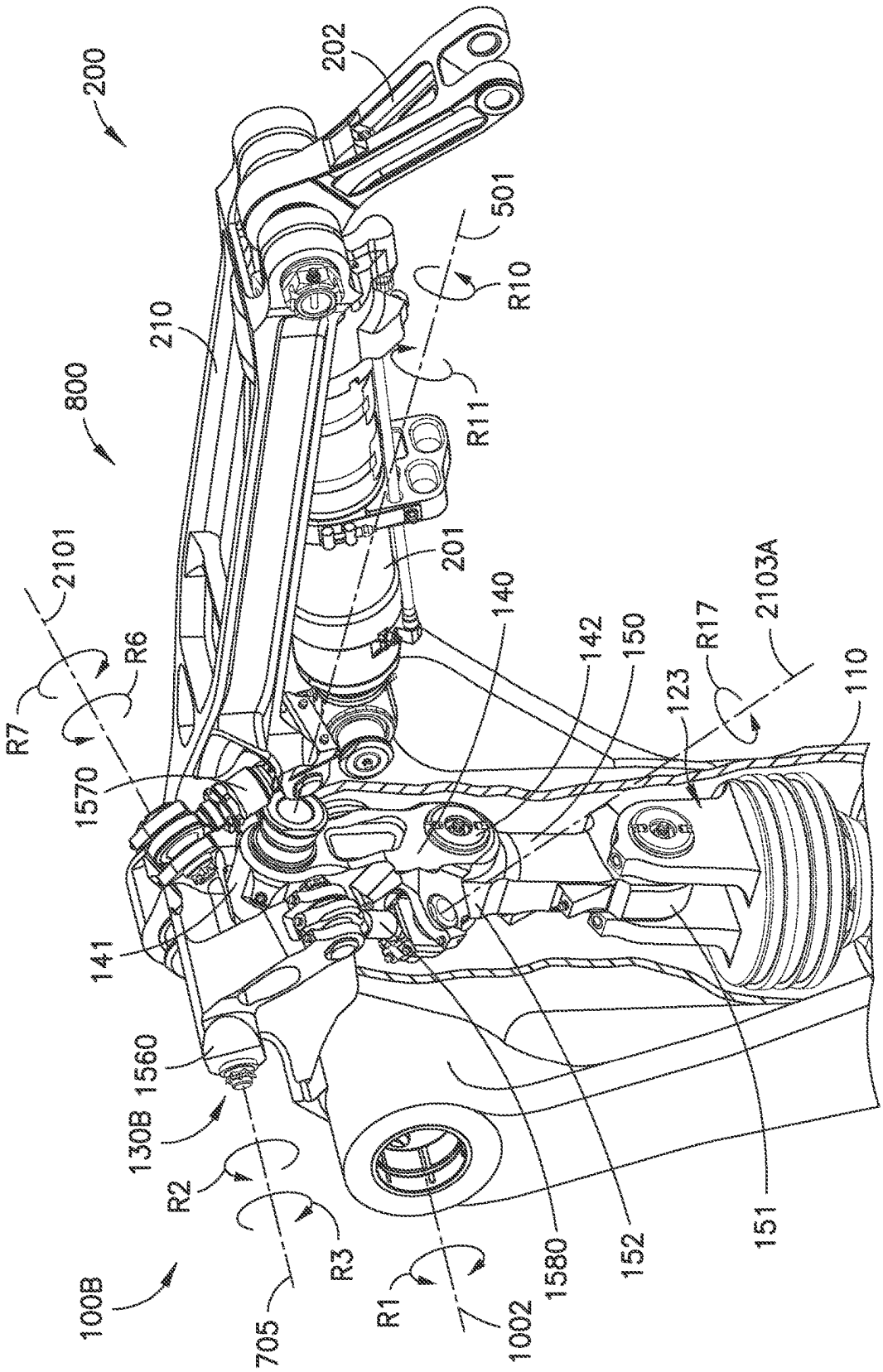
200
202
501
R10
210
800
R11
201
2101
R6
R7
140
142
150
R17
2103A
123
110
1570
120
141
1560
130B
R2
R3
R1
1002
1580
152
151
100B
705

FIG. 15

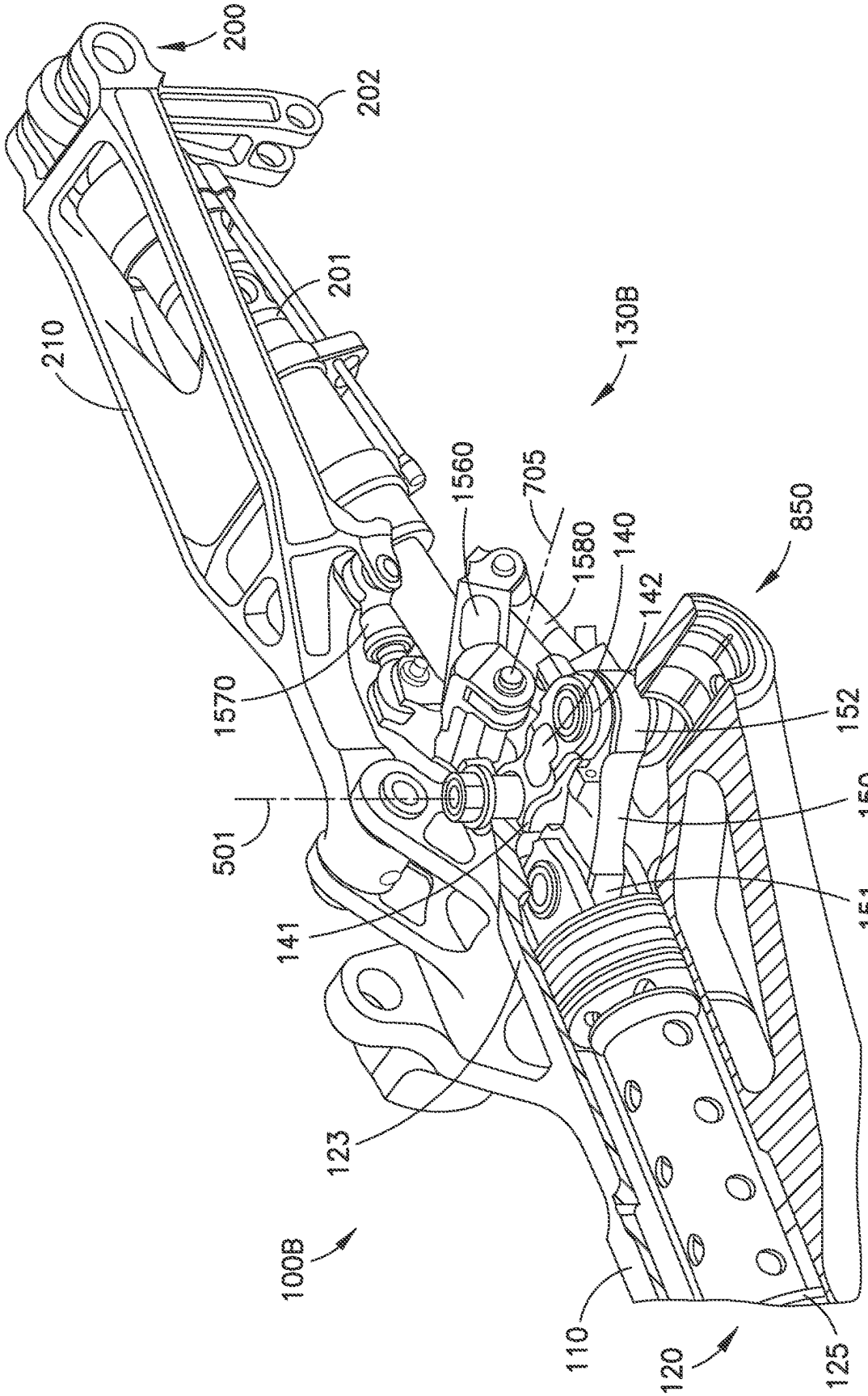
200
202
201
210
130B
1560
705
1580
140
142
850
1570
152
501
150
151
141
123
100B
110
120
125

FIG. 16

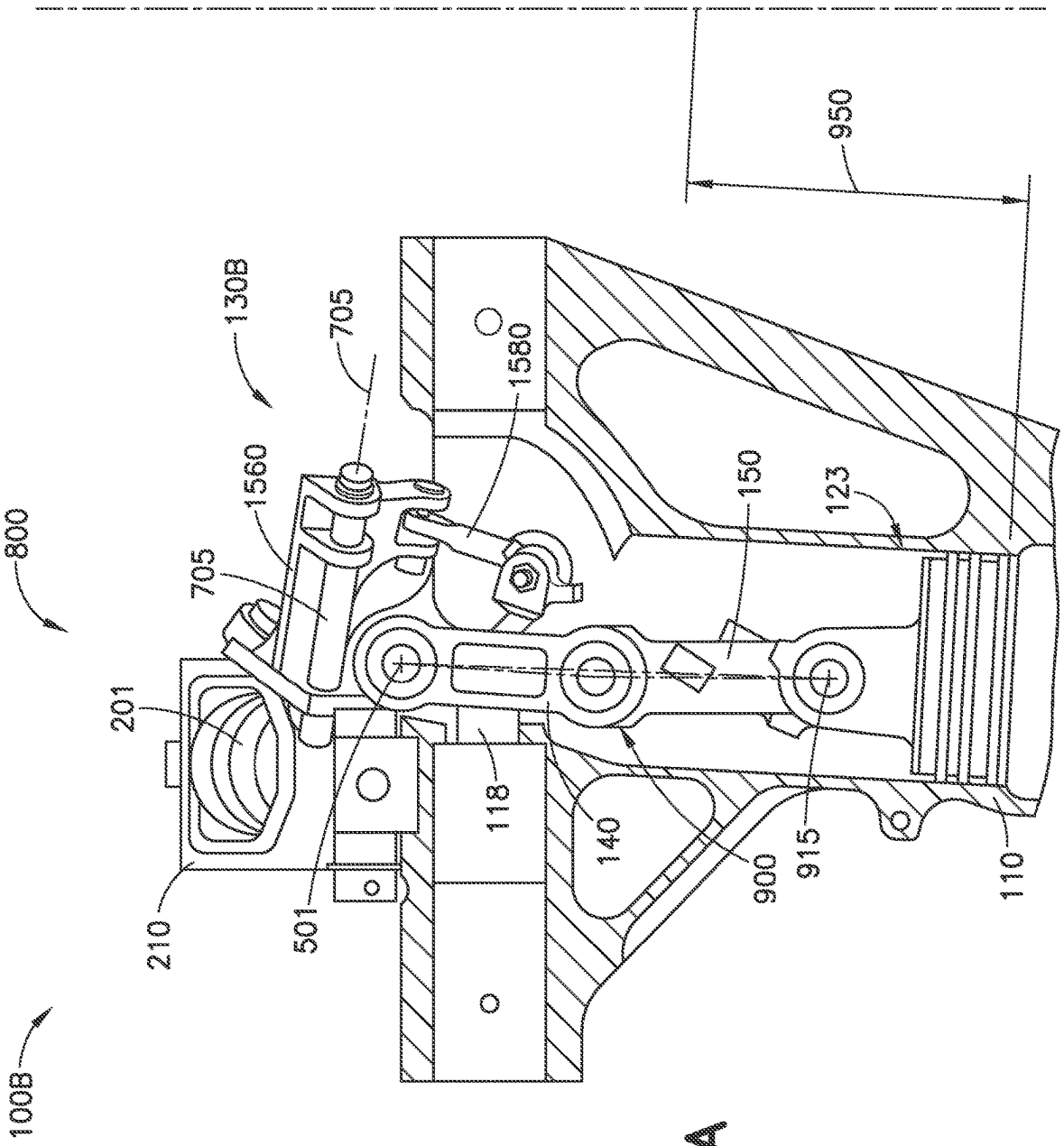
800
100B
130B
705
705
1560
1580
201
210
501
118
140
900
915
110
150
123
950

FIG. 17A

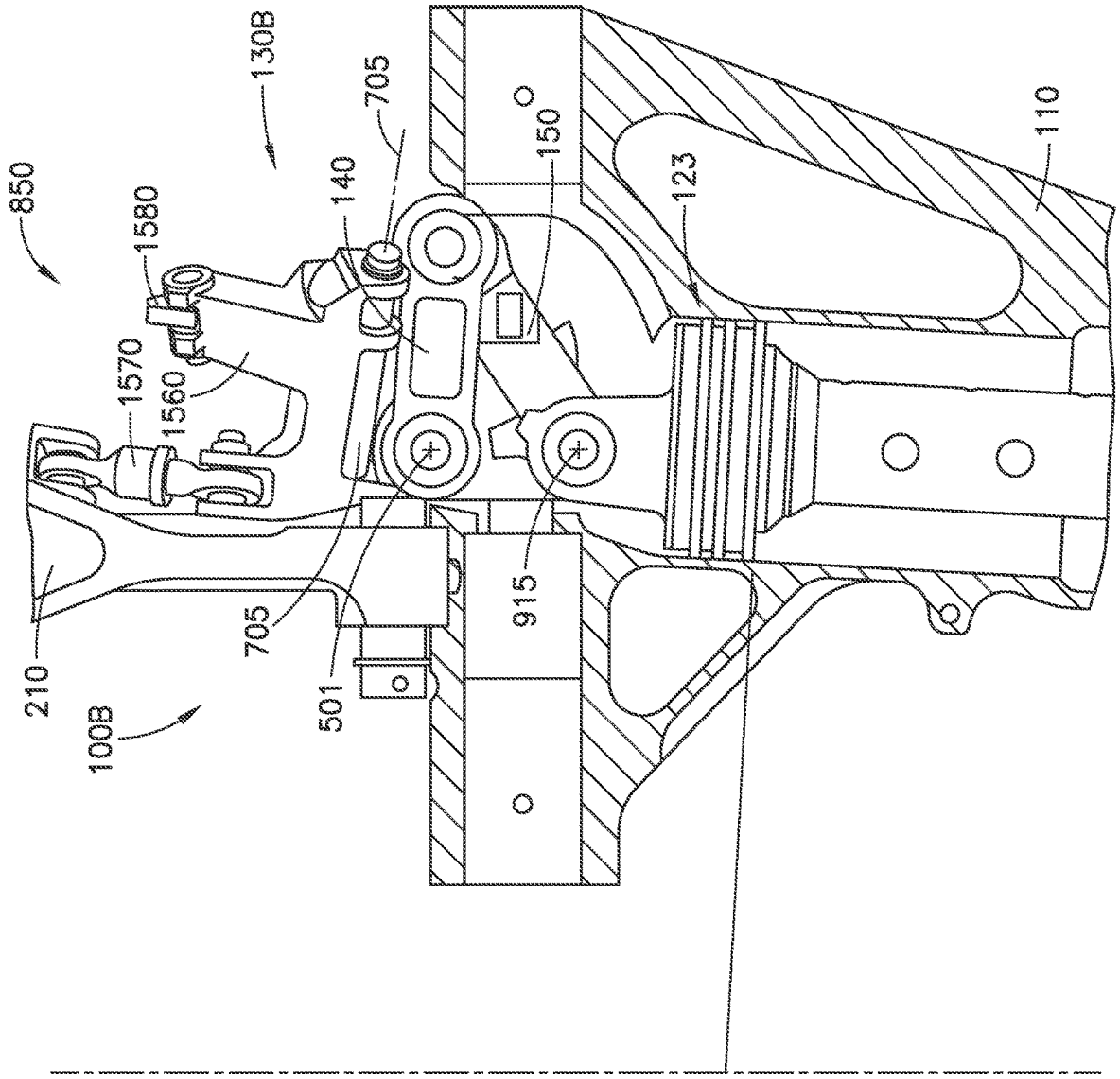
850
1580
1570
1560
210
100B
130B
140
705
705
501
150
915
123
110

FIG.17B

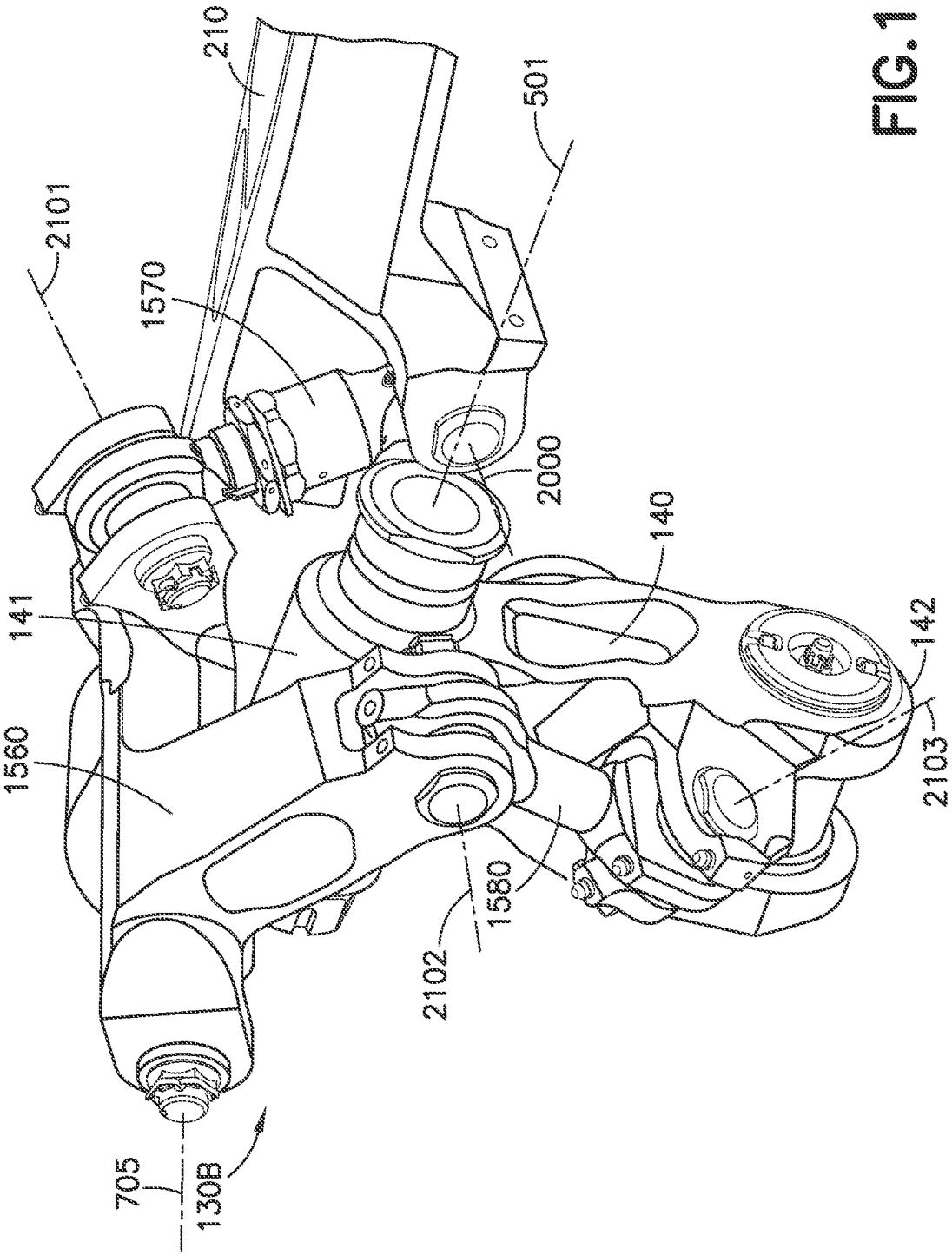
210
2101
1570
501
2000
140
141
142
1560
2103
1580
2102
705
130B

FIG. 18

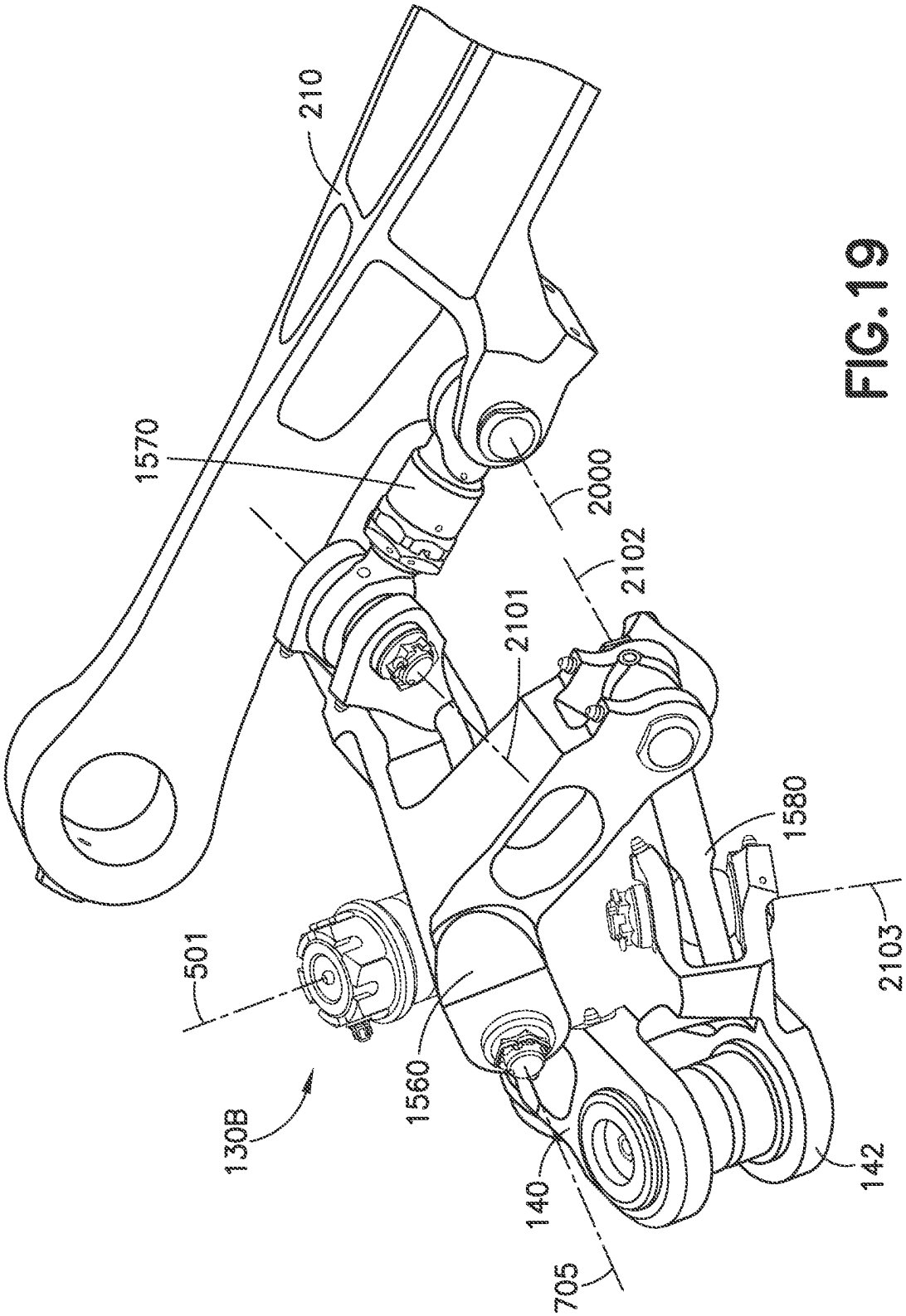


FIG. 19

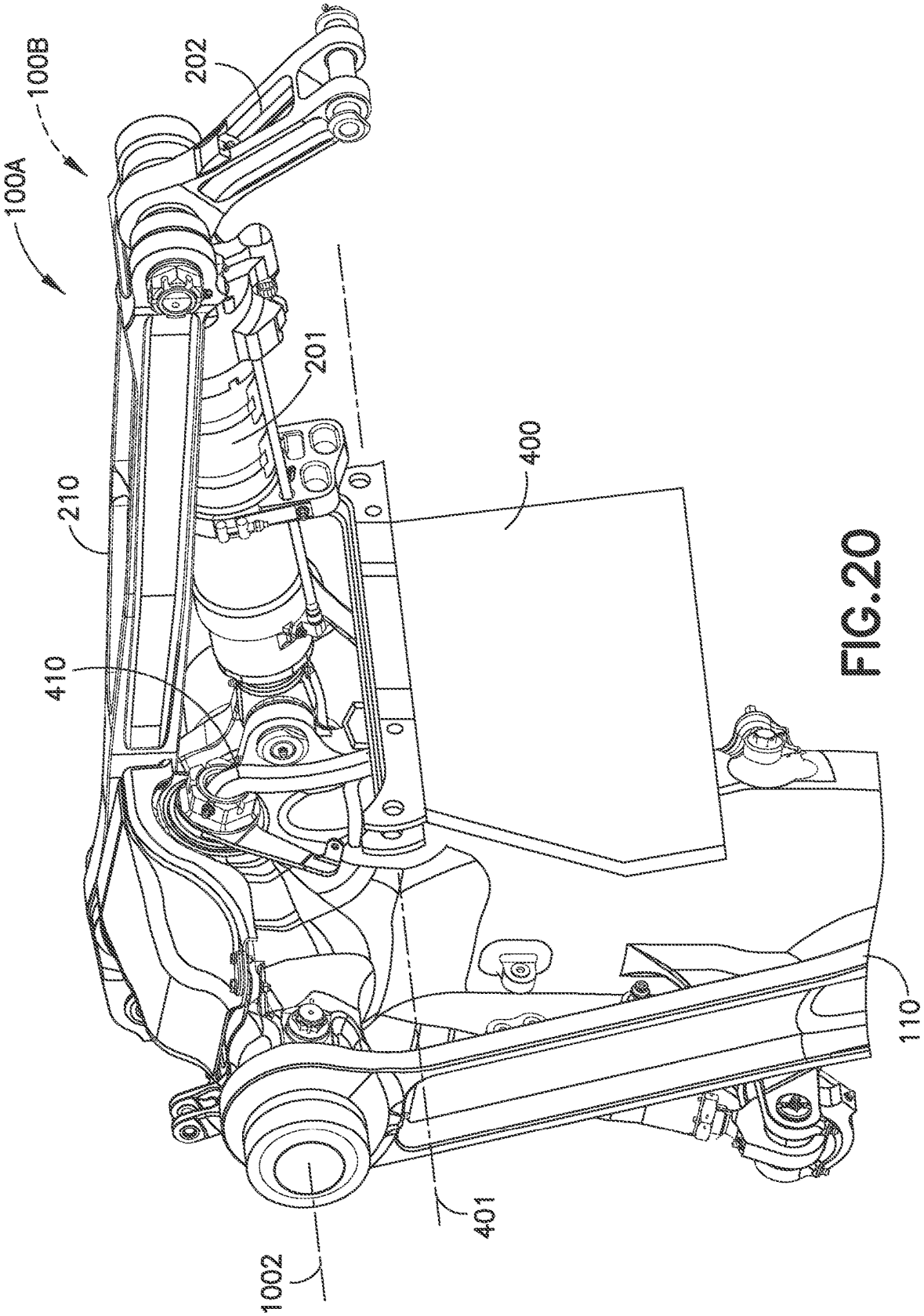


FIG.20

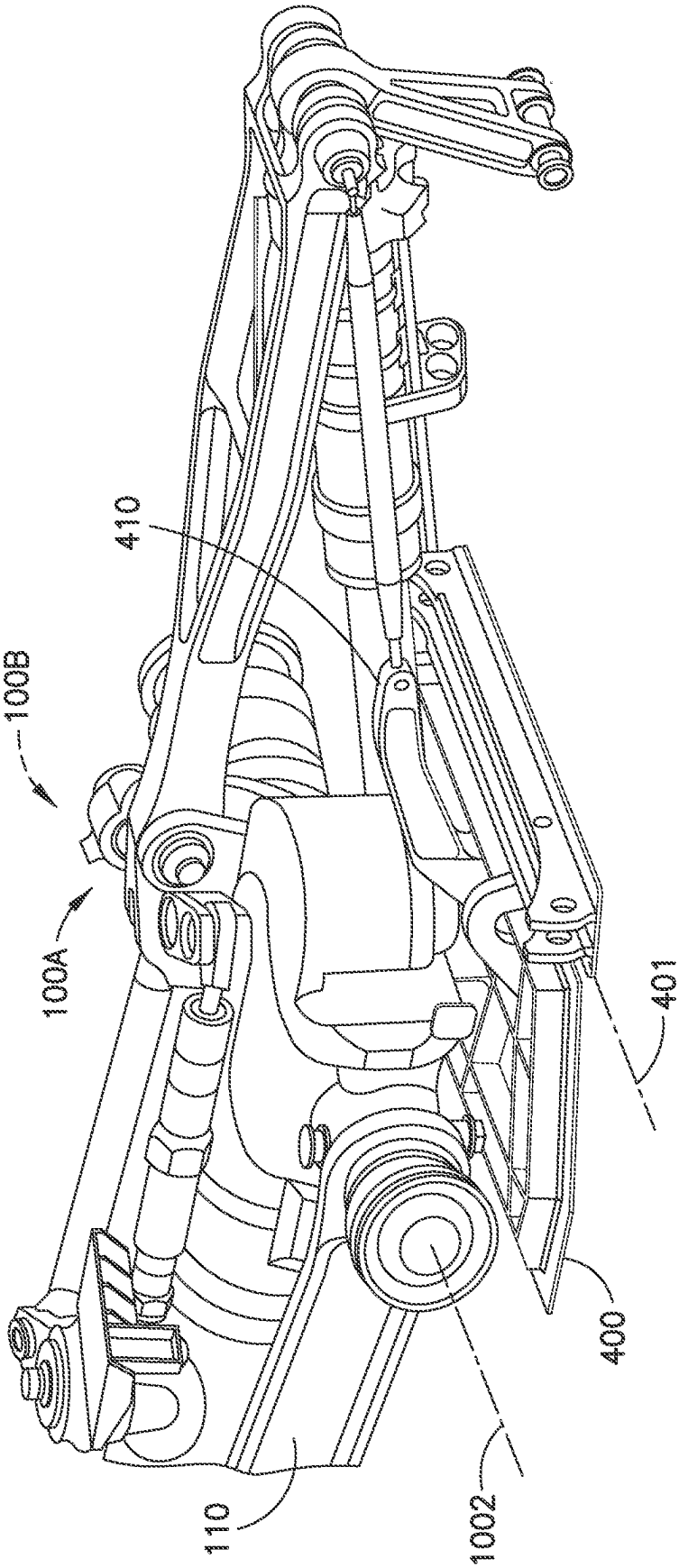


FIG.21

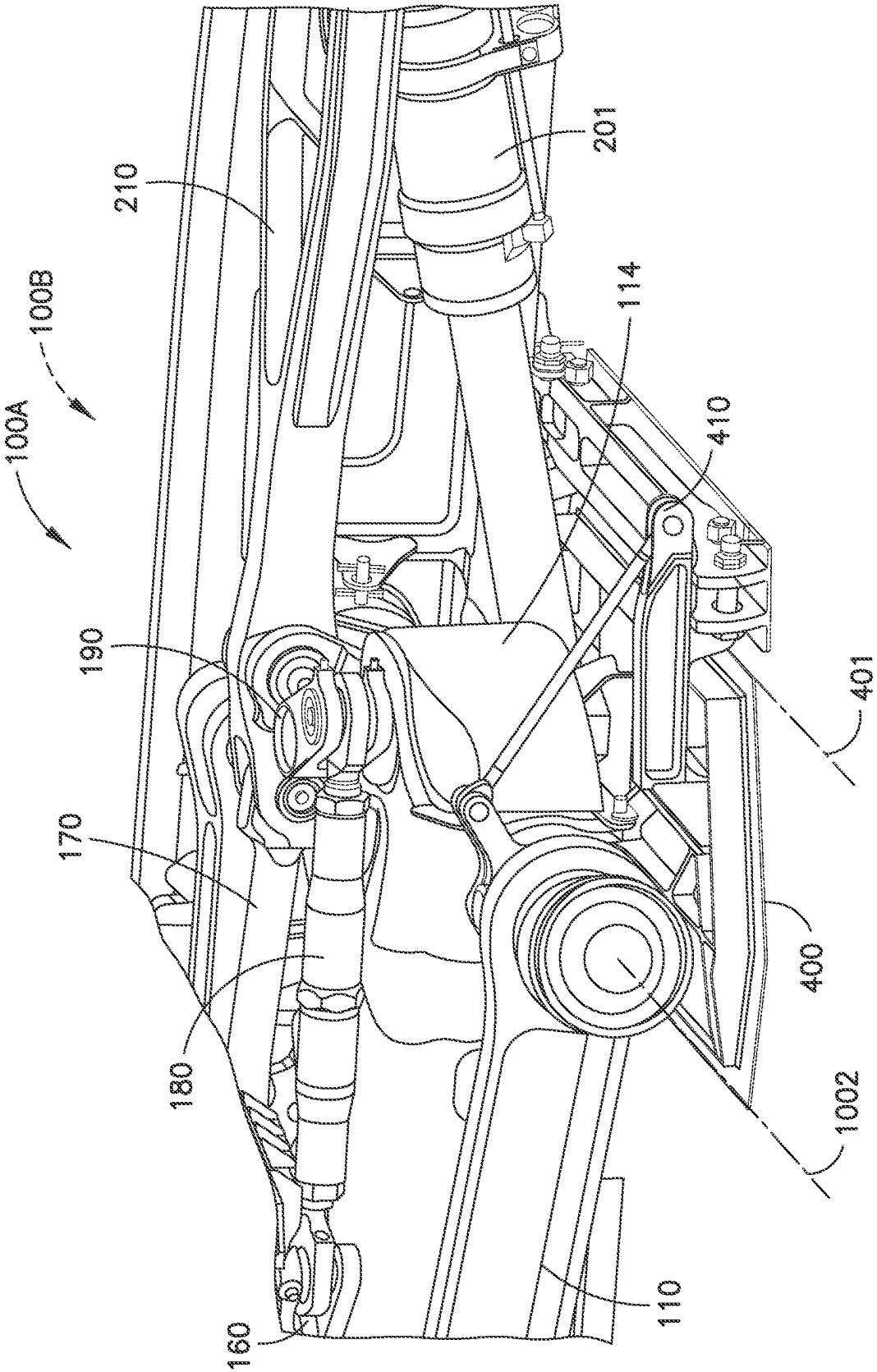


FIG.22

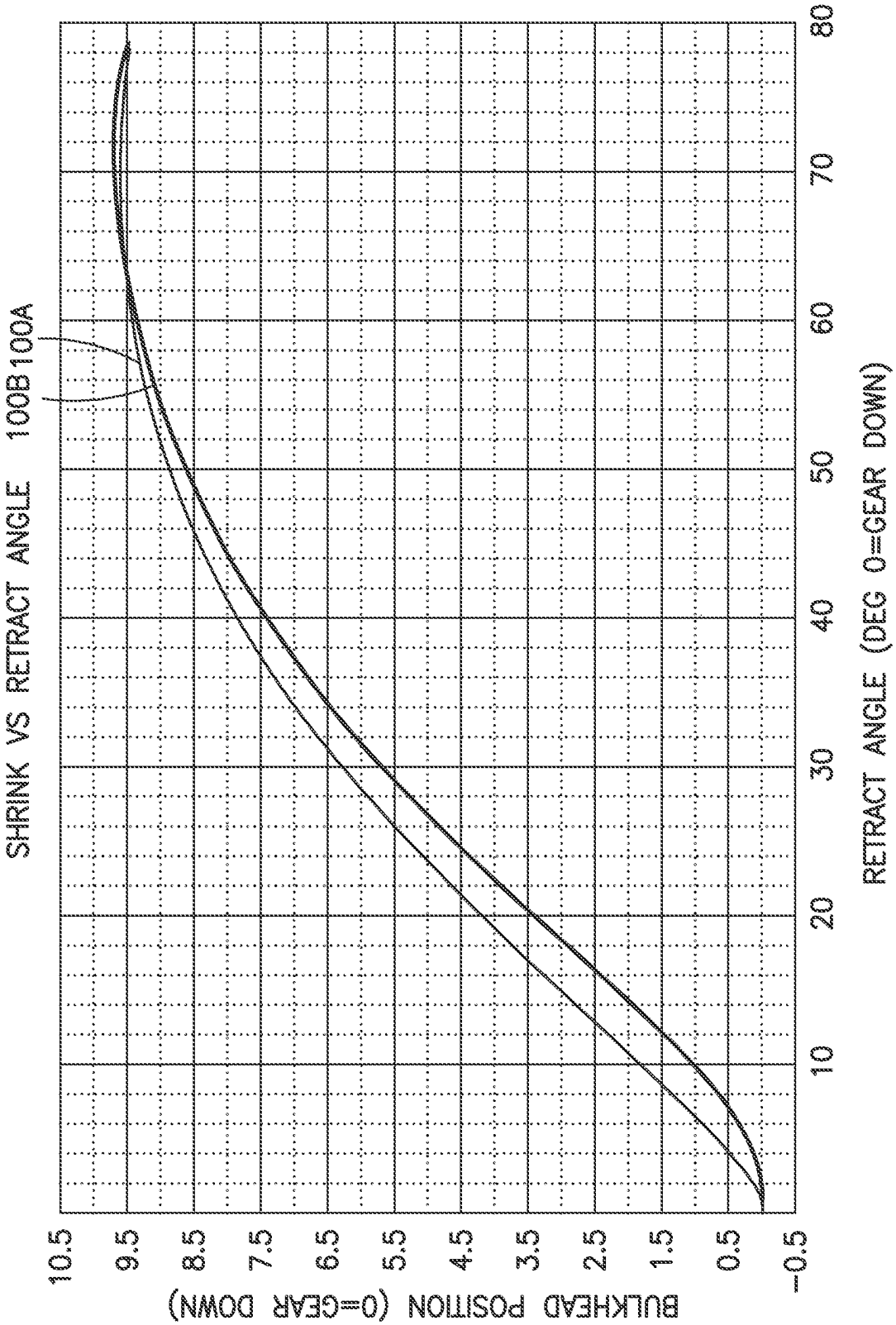
SHRINK VS RETRACT ANGLE
100B
100A
BULKHEAD POSITION (0=GEAR DOWN)
10.5
9.5
8.5
7.5
6.5
5.5
4.5
3.5
2.5
1.5
0.5
−0.5
10
20
30
40
50
60
70
80
RETRACT ANGLE (DEG 0=GEAR DOWN)

FIG.23

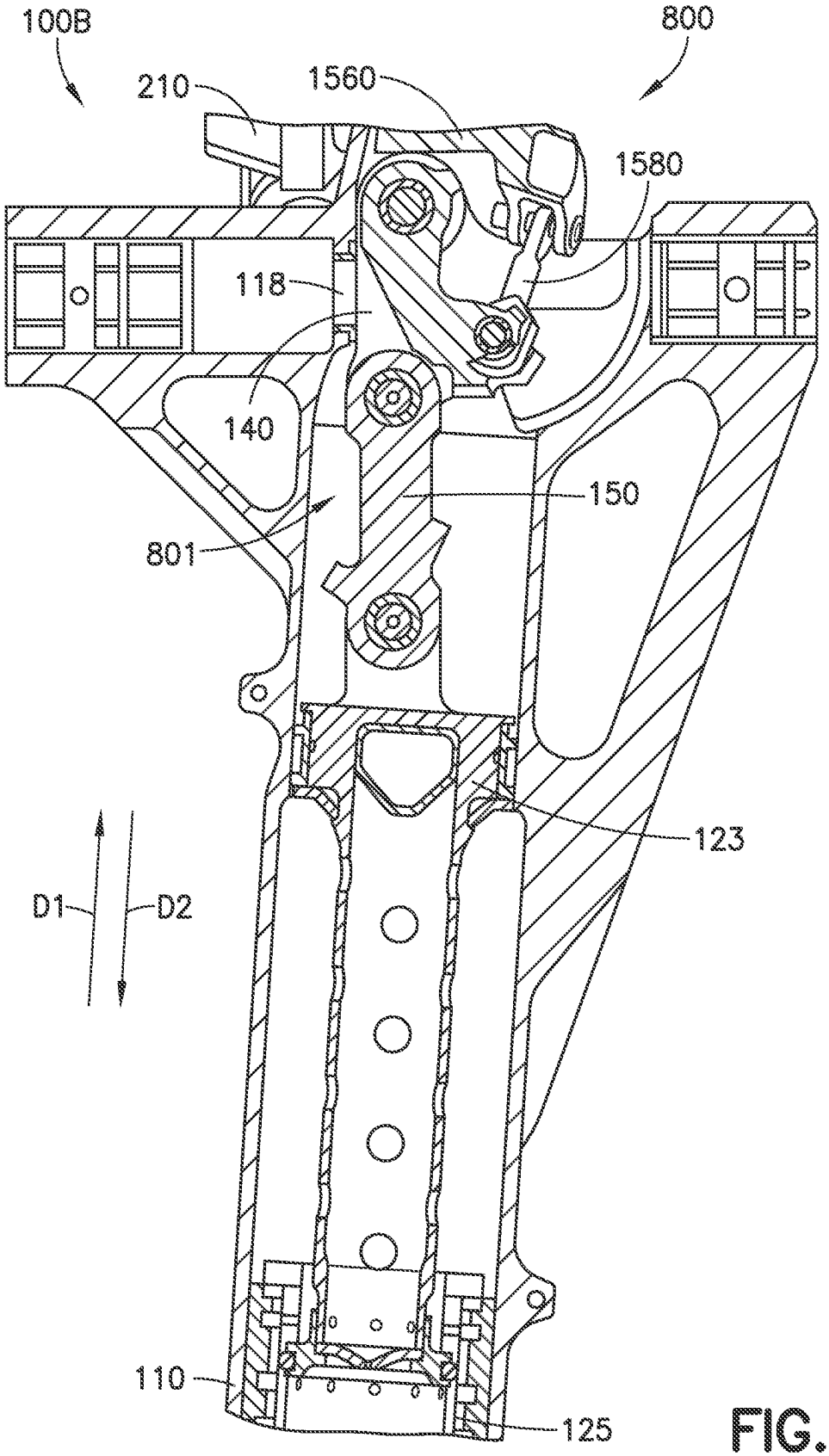


FIG.24A

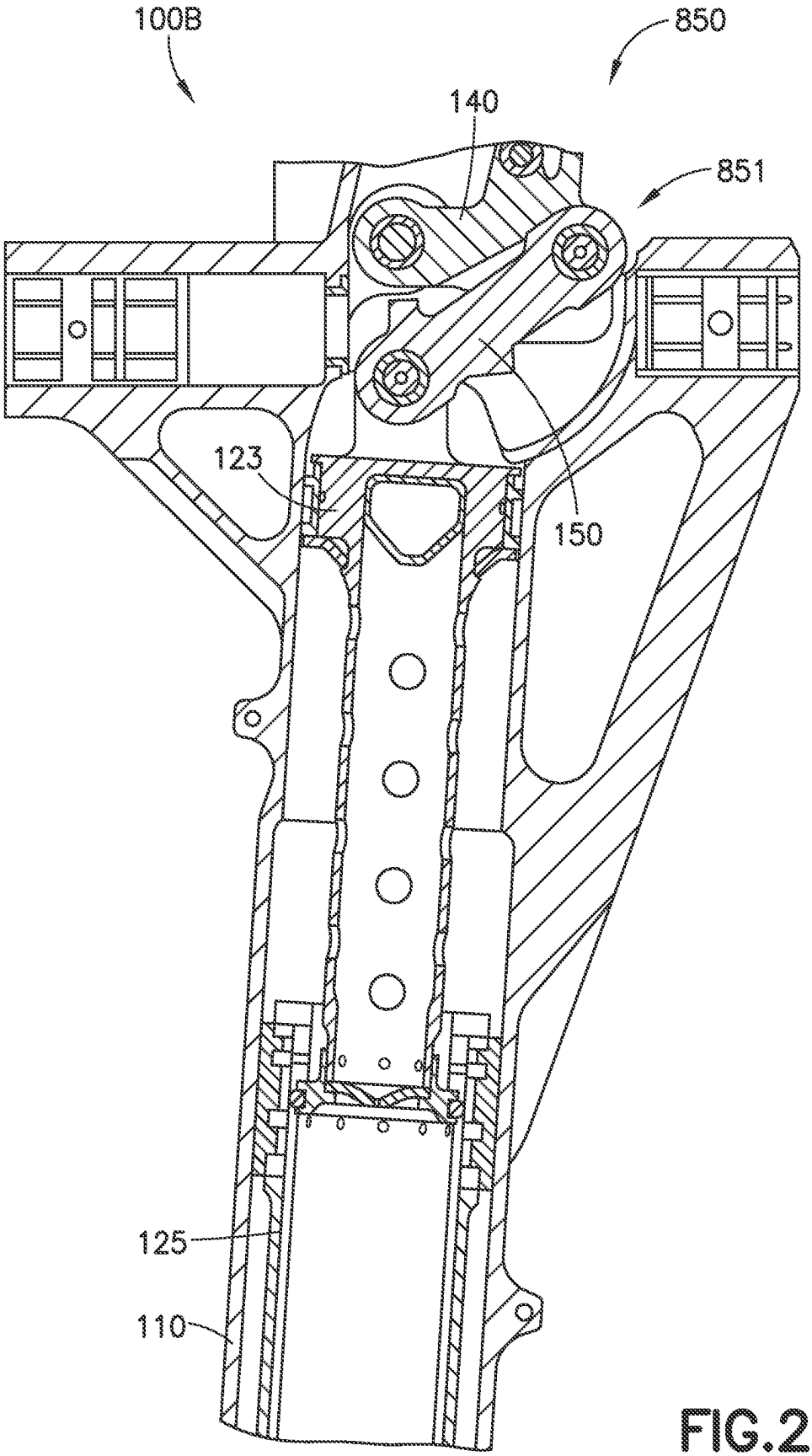


FIG.24B

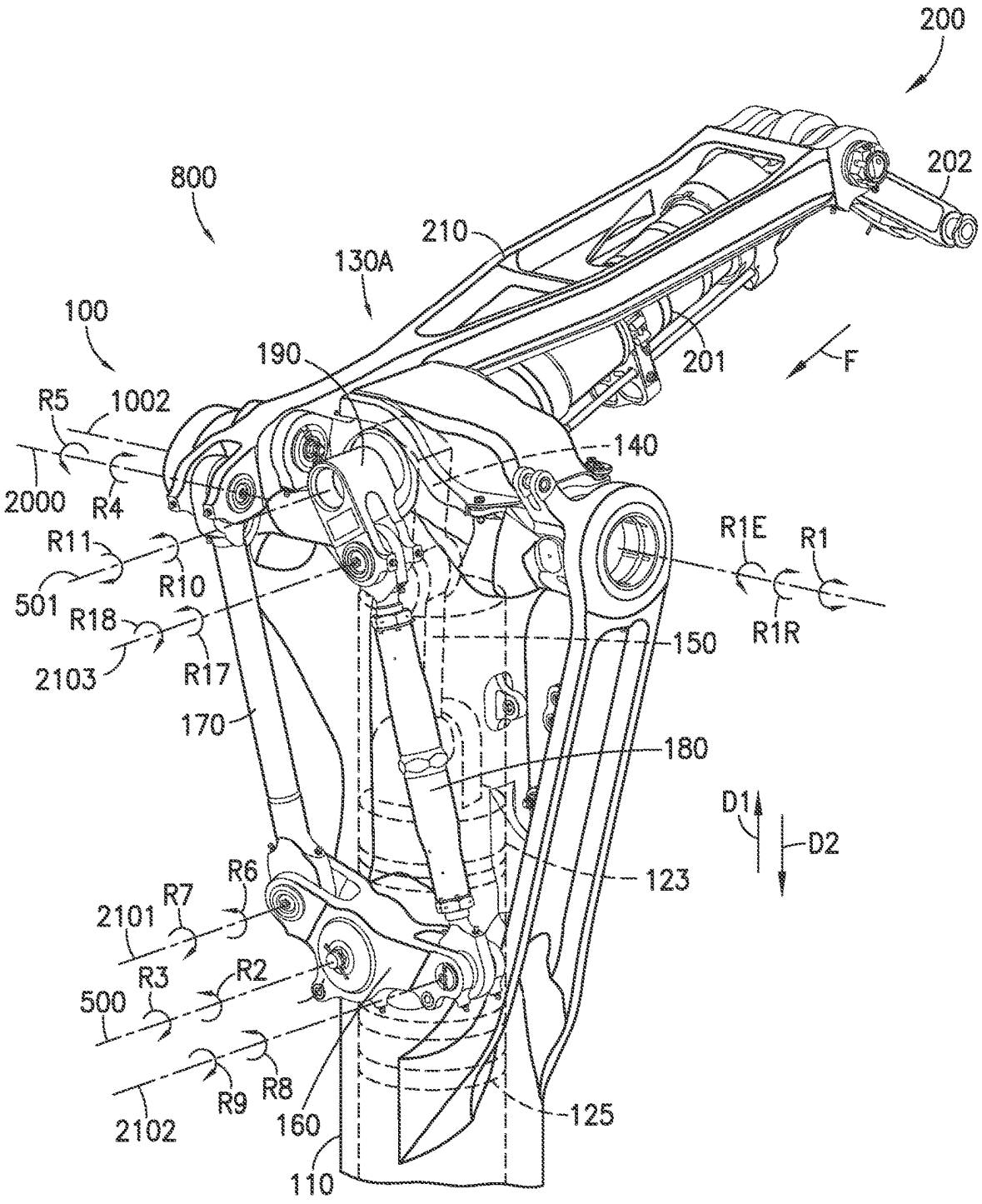
200
202
800
210
130A
100
190
201
F
R5
1002
140
2000
R4
R11
R1E
R1
501
R10
R18
R1R
150
2103
R17
170
180
D1
D2
R6
123
2101
R7
R3
R2
500
R9
R8
125
2102
160
110

FIG.25A

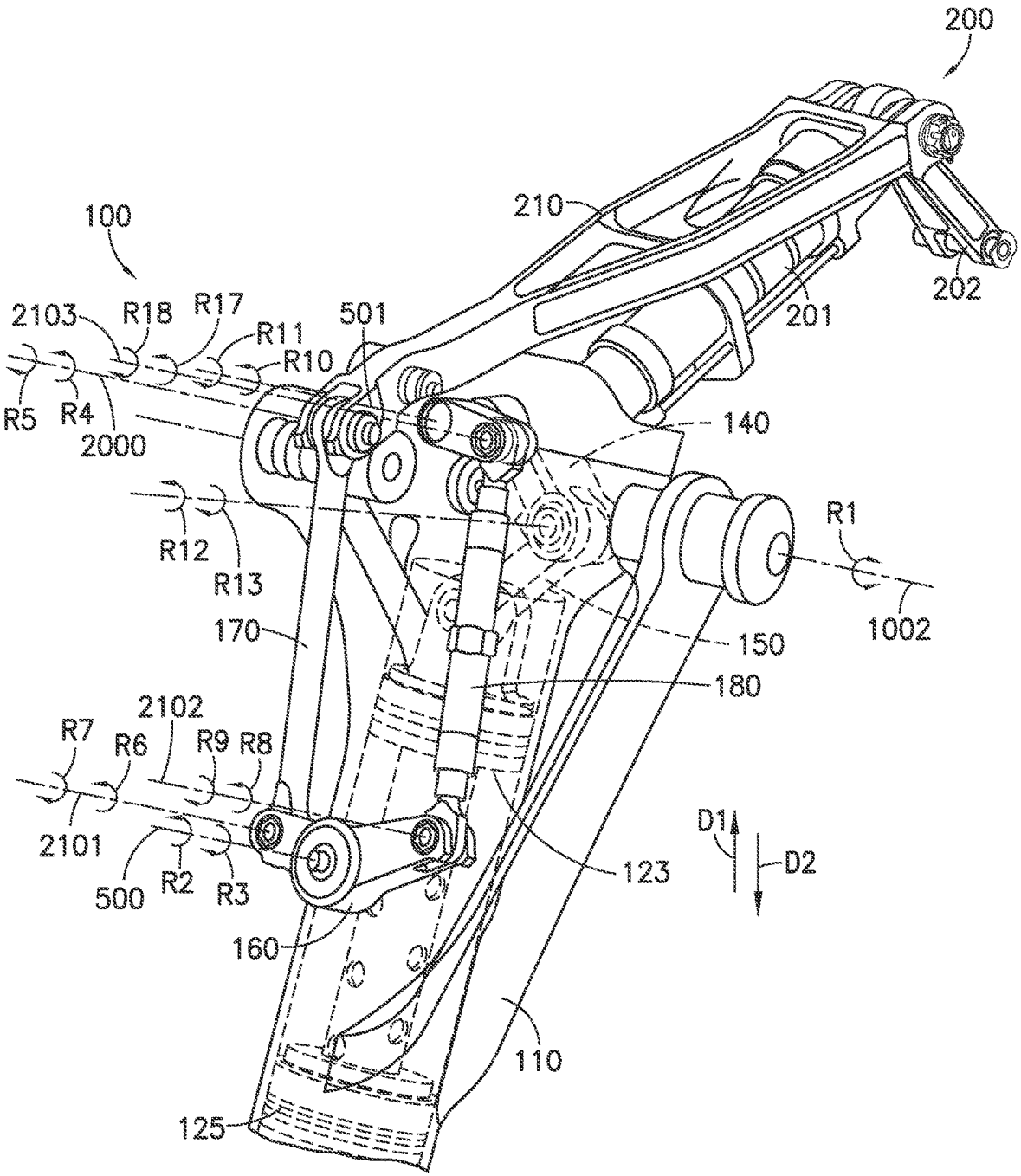
200
210
100
202
201
2103
R18
R17
501
R11
R10
R5
R4
2000
140
R12
R13
R1
1002
170
150
180
2102
R7
R6
R9
R8
2101
500
R2
R3
123
D1
D2
160
110
125

FIG.25B

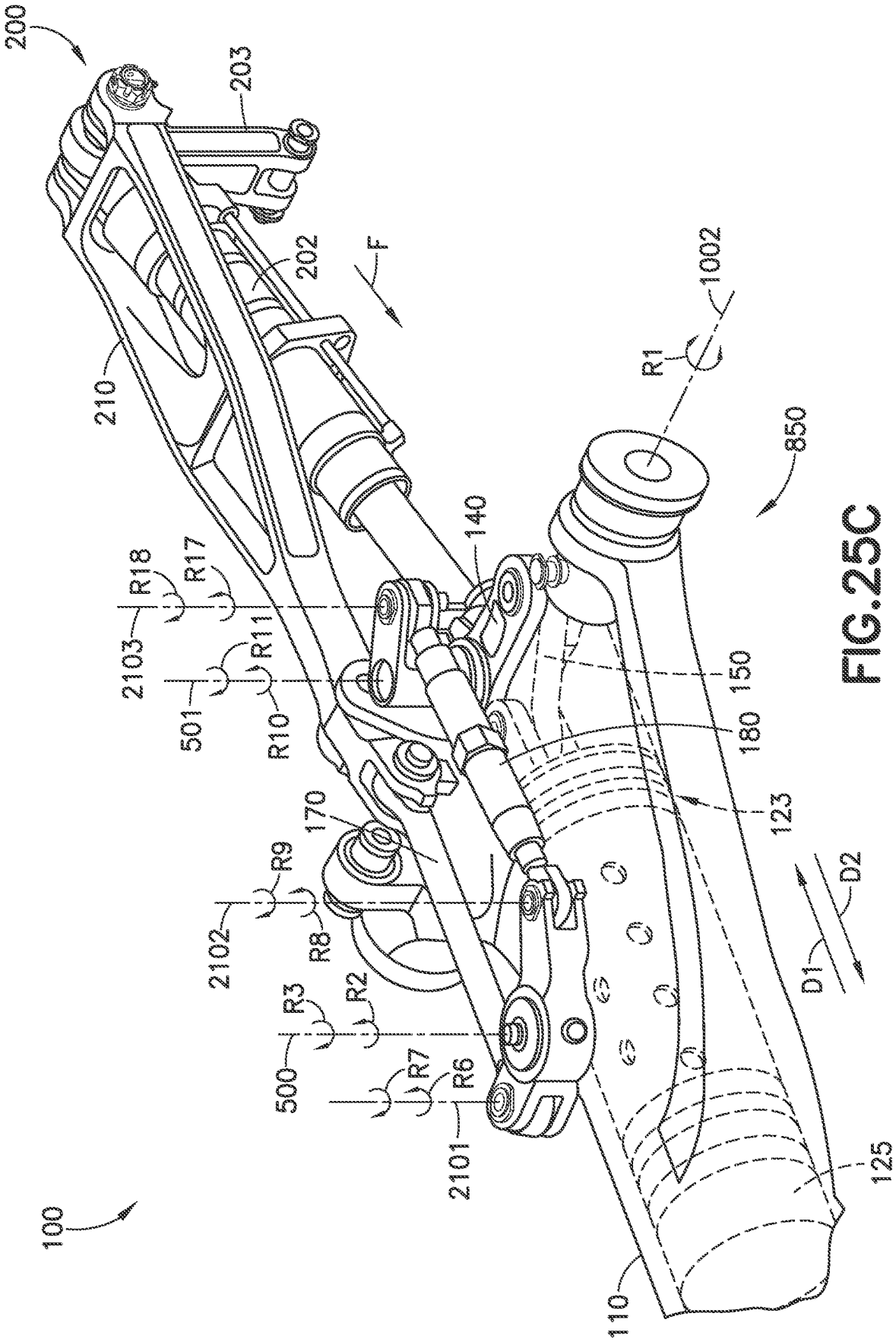
200
203
202
F
210
1002
R1
850
140
R18
R17
2103
R11
501
R10
150
180
170
123
R9
2102
R8
D2
D1
R3
R2
500
R7
R6
2101
125
100
110

FIG.25C

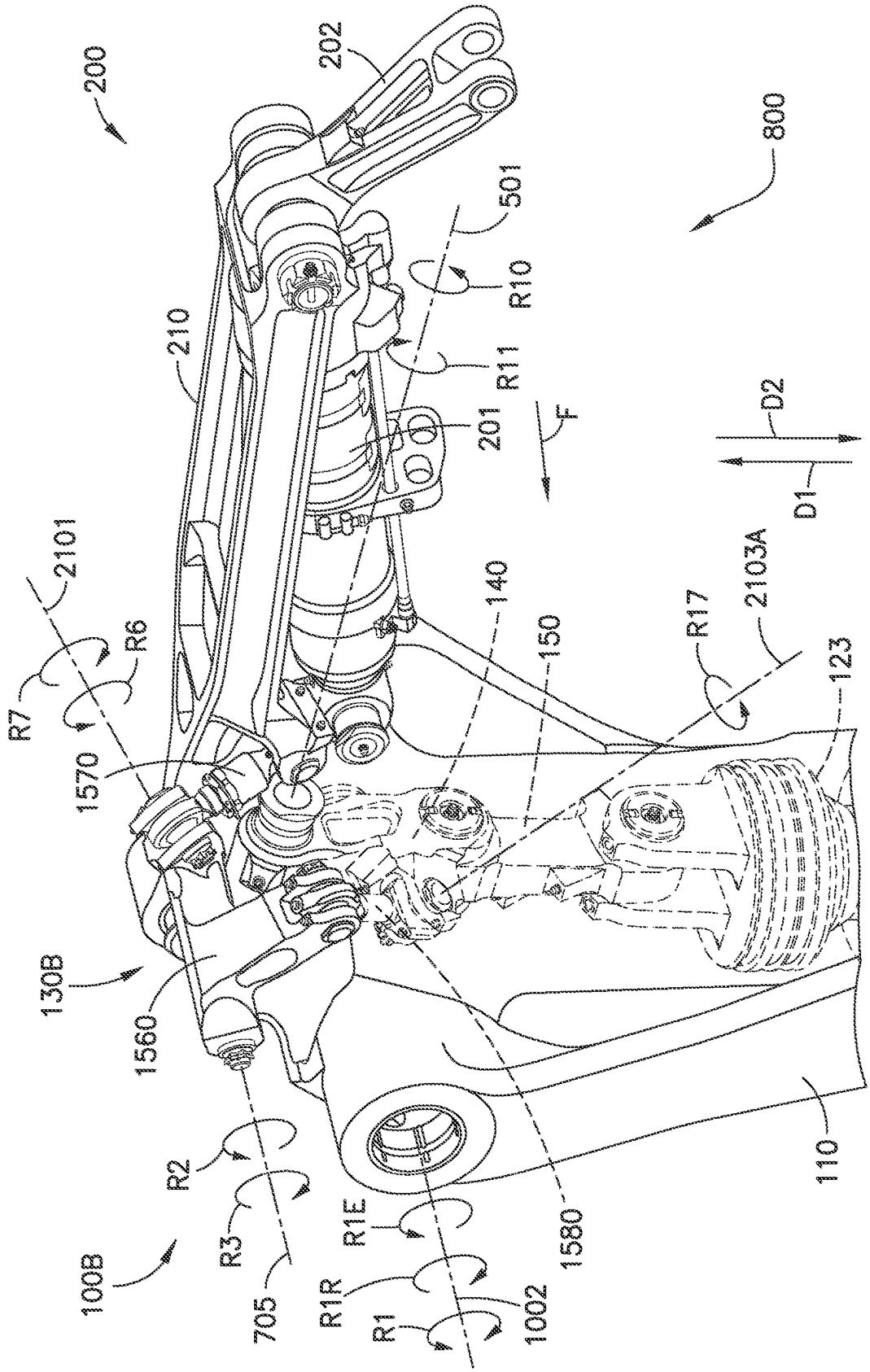
200
202
800
501
R10
210
R11
201
F
D2
D1
2101
R6
R7
1570
140
150
R17
2103A
123
130B
1560
R2
R3
705
100B
R1E
R1R
R1
1002
1580
110

FIG.26A

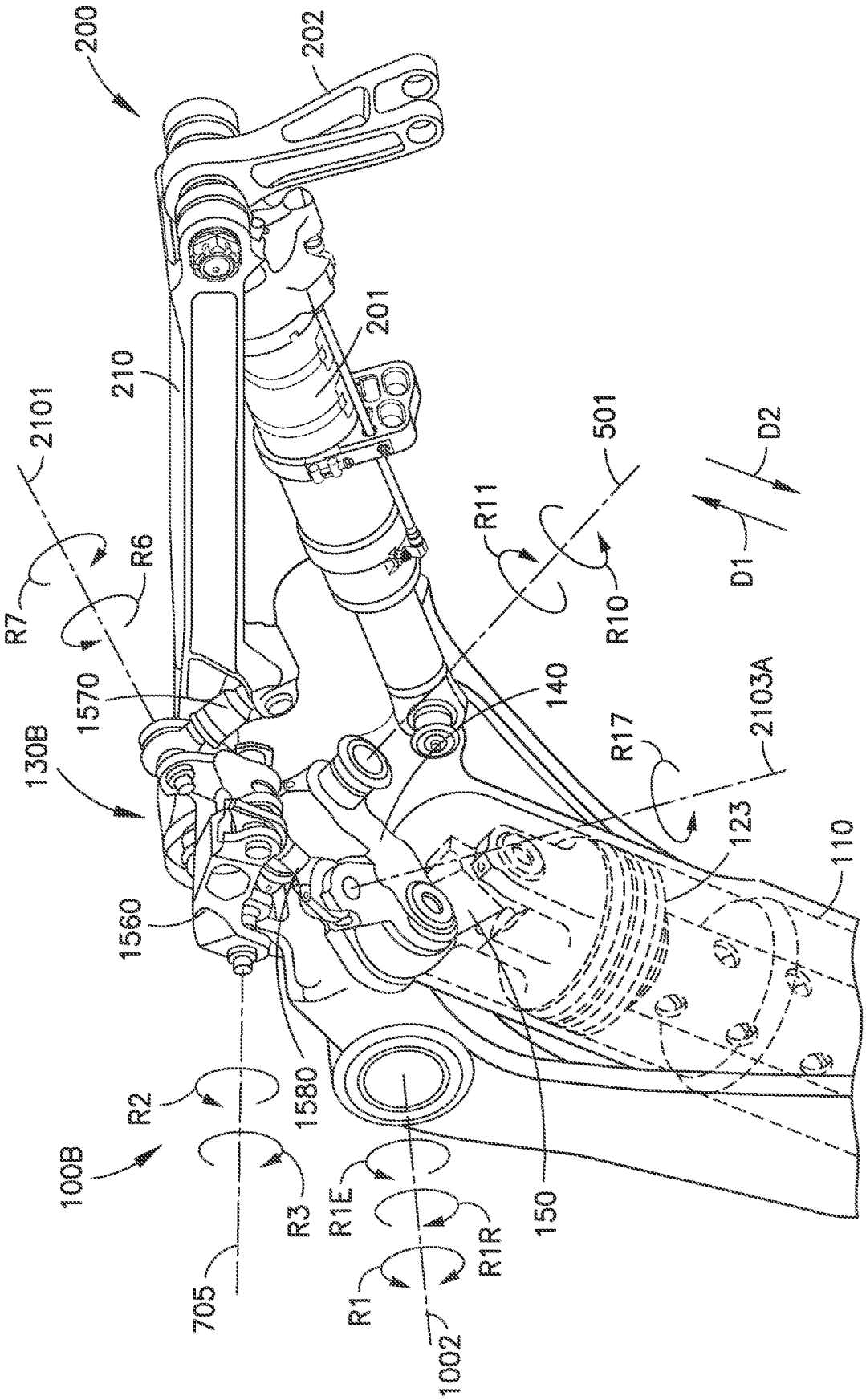
200
202
201
210
2101
R7
R6
1570
130B
1560
1580
R2
100B
R3
705
R1E
R1R
R1
1002
150
140
R11
501
R10
D2
D1
R17
2103A
123
110

FIG.26B

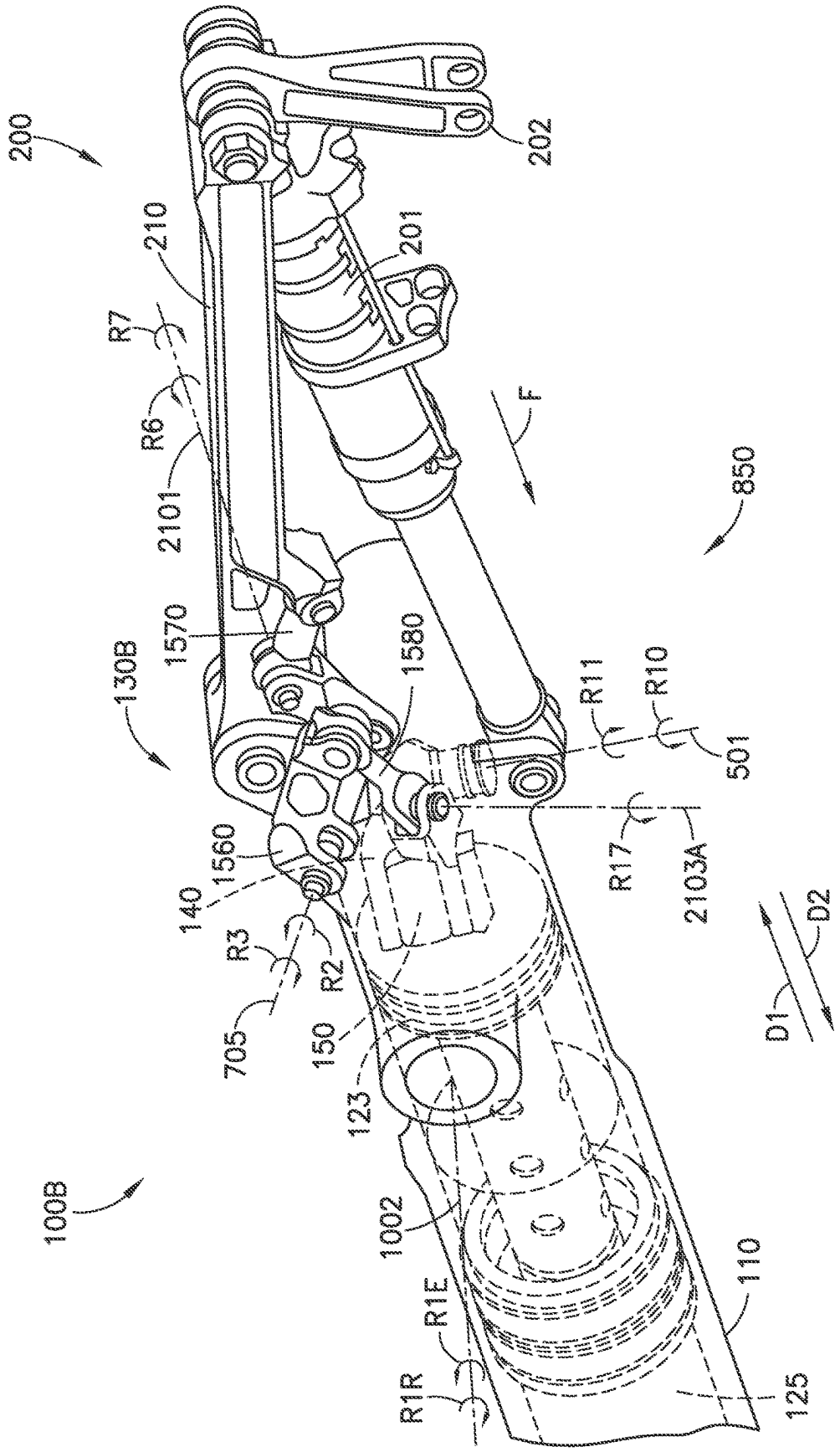
200
202
210
201
R7
R6
2101
F
850
1570
1580
130B
R11
R10
501
1560
R17
2103A
140
R3
R2
D2
705
150
D1
123
100B
1002
110
R1E
R1R
125

FIG.26C

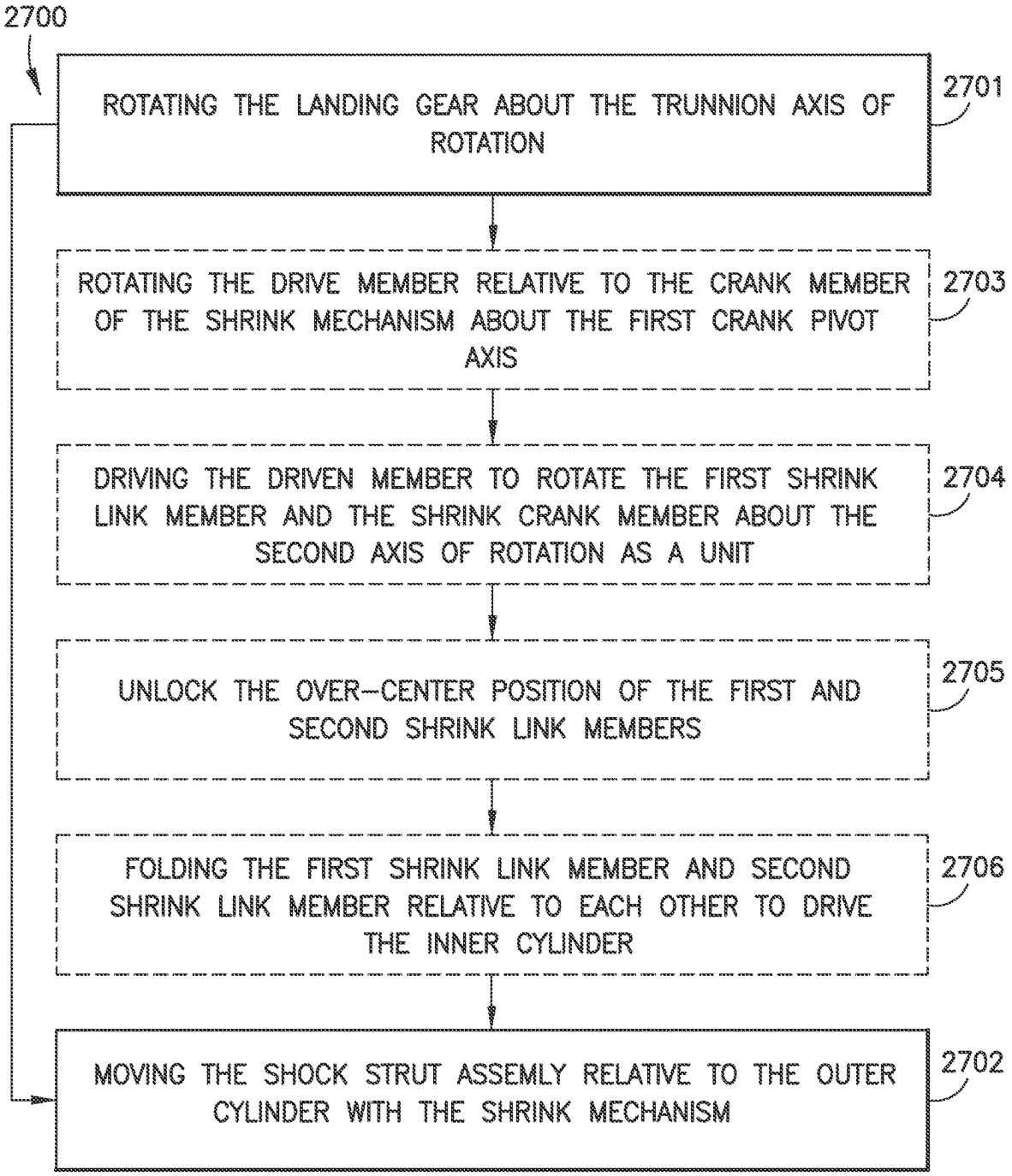
2700
ROTATING THE LANDING GEAR ABOUT THE TRUNNION AXIS OF ROTATION
2701
ROTATING THE DRIVE MEMBER RELATIVE TO THE CRANK MEMBER OF THE SHRINK MECHANISM ABOUT THE FIRST CRANK PIVOT AXIS
2703
DRIVING THE DRIVEN MEMBER TO ROTATE THE FIRST SHRINK LINK MEMBER AND THE SHRINK CRANK MEMBER ABOUT THE SECOND AXIS OF ROTATION AS A UNIT
2704
UNLOCK THE OVER-CENTER POSITION OF THE FIRST AND SECOND SHRINK LINK MEMBERS
2705
FOLDING THE FIRST SHRINK LINK MEMBER AND SECOND SHRINK LINK MEMBER RELATIVE TO EACH OTHER TO DRIVE THE INNER CYLINDER
2706
MOVING THE SHOCK STRUT ASSEMLY RELATIVE TO THE OUTER CYLINDER WITH THE SHRINK MECHANISM
2702

FIG.27

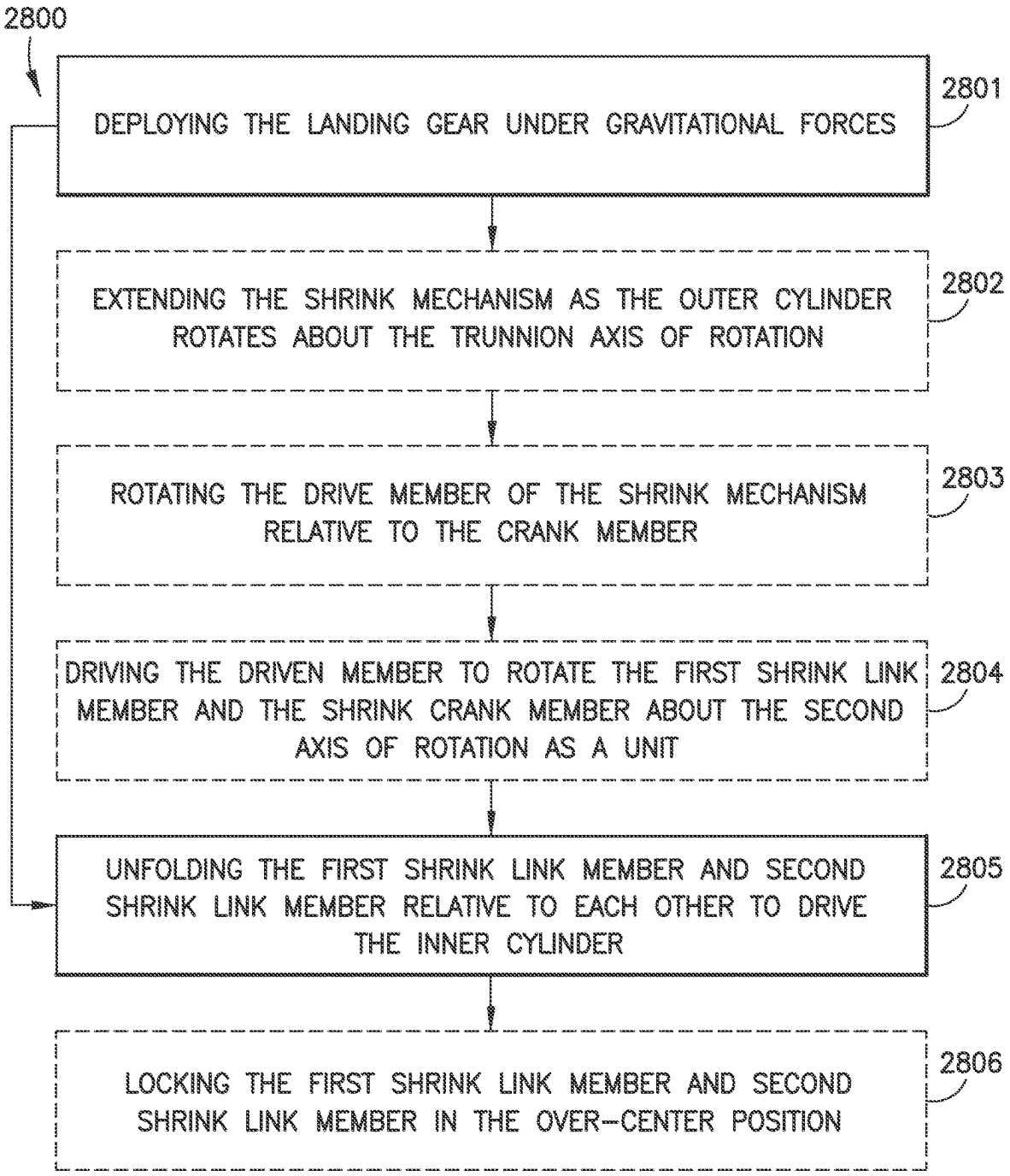
2800
DEPLOYING THE LANDING GEAR UNDER GRAVITATIONAL FORCES
2801
EXTENDING THE SHRINK MECHANISM AS THE OUTER CYLINDER ROTATES ABOUT THE TRUNNION AXIS OF ROTATION
2802
ROTATING THE DRIVE MEMBER OF THE SHRINK MECHANISM RELATIVE TO THE CRANK MEMBER
2803
DRIVING THE DRIVEN MEMBER TO ROTATE THE FIRST SHRINK LINK MEMBER AND THE SHRINK CRANK MEMBER ABOUT THE SECOND AXIS OF ROTATION AS A UNIT
2804
UNFOLDING THE FIRST SHRINK LINK MEMBER AND SECOND SHRINK LINK MEMBER RELATIVE TO EACH OTHER TO DRIVE THE INNER CYLINDER
2805
LOCKING THE FIRST SHRINK LINK MEMBER AND SECOND SHRINK LINK MEMBER IN THE OVER-CENTER POSITION
2806

FIG.28

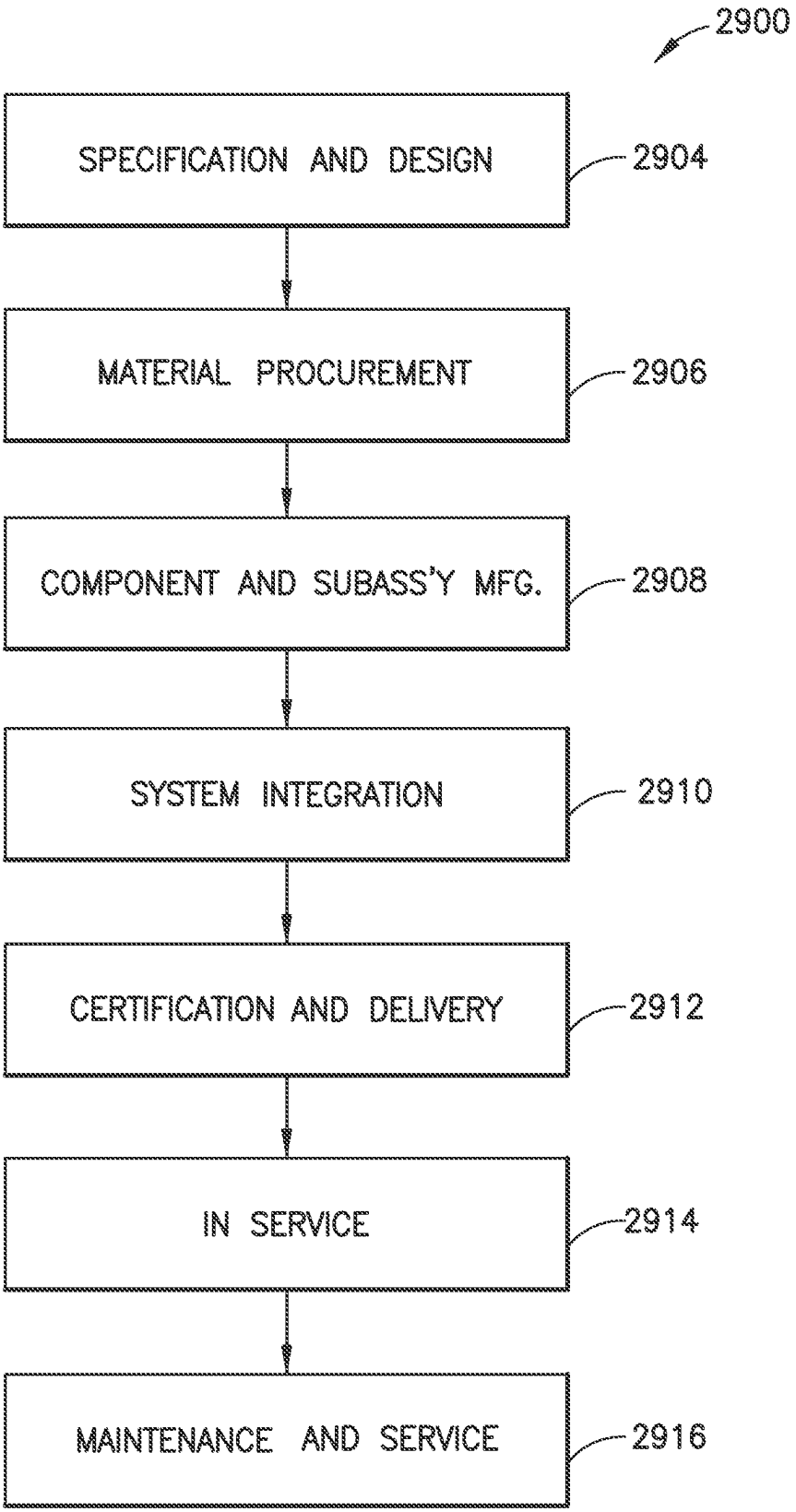
2900
SPECIFICATION AND DESIGN
2904
MATERIAL PROCUREMENT
2906
COMPONENT AND SUBASS'Y MFG.
2908
SYSTEM INTEGRATION
2910
CERTIFICATION AND DELIVERY
2912
IN SERVICE
2914
MAINTENANCE AND SERVICE
2916

FIG.29

# LANDING GEAR SHRINK LINK MECHANISM

## CROSS-REFERENCE TO RELATED APPLICATIONS

This application is a continuation of and claims the benefit of U.S. application Ser. No. 17/188,198 filed on Mar. 1, 2021 (now U.S. Pat. No. 11,708,151 issued on Jul. 25, 2023), which is a continuation of and claims the benefit of U.S. application Ser. No. 16/049,090 filed on Jul. 30, 2018 (now U.S. Pat. No. 10,981,646 issued on Apr. 20, 2021), the disclosures of which are incorporated herein by reference in their entireties.

## BACKGROUND

### 1. Field

The exemplary embodiments generally relate to aircraft landing gear components and systems and in particular to landing gear assemblies for extending and retracting landing gear.

### 2. Brief Description of Related Developments

Aircraft generally include landing gear to facilitate take-off, landing, and taxi. It is generally desired to have tall landing gear for various reasons. These reasons include generating a greater angle of rotation (e.g., angle of attack) of the aircraft during take-off and landing, providing more ground clearance to mount engines, increasing the ride height of the aircraft, etc. Lengthening of the landing gear can cause several issues including requiring moving the landing gear further outboard from the fuselage along the wing to compensate for the increased length of the landing gear on stowage, integrating overwing slides into the aircraft, a larger wheel well, etc. Further, increasing the length of the landing gear increases the static height of the aircraft resulting in the need for new sill waterlines, longer and higher exit slides, a landing gear actuation mechanism redesign, the need for off wing exit slides, landing gear stowage compartment redesign, etc.

Some aircraft utilize telescopic landing gear to provide increased ground clearance where a length of the telescopic landing gear can be decreased for stowage of the landing gear within the wheel well of the aircraft. The telescopic landing gear may also provide for greater angle of rotation of the aircraft at take-off and/or landing. Telescopic landing gear may be used in conventional aircraft to combat the costs of reconfiguring an aircraft's wheel well to incorporate taller landing gear. The length of the telescopic landing gear will shorten when the landing gear is retracted for stowing the landing gear (i.e., the landing gear shortens to fit the existing wheel well) and the landing gear will extend (i.e., its length will increase) when deployed for ground maneuvering (e.g., take-off, landing, taxiing, etc.) to take advantage of a taller landing gear.

## SUMMARY

The following is a non-exhaustive list of examples, which may or may not be claimed, of the subject matter according to the present disclosure.

One example of the subject matter according to the present disclosure relates to a landing gear including an outer cylinder rotatably coupled to a frame of an aircraft about a trunnion axis of rotation, a shock strut assembly movably coupled to the outer cylinder so as to reciprocate along a longitudinal axis of the outer cylinder, and a shrink mechanism including a first shrink link member pivotally coupled to the outer cylinder, a second shrink link member coupling the first shrink link member to the shock strut assembly, a crank member pivotally coupled to the outer cylinder, a drive member coupling the crank member to a walking beam (a.k.a. retract actuator beam) of a landing gear retract mechanism, and a driven member coupling the crank member to the first shrink link member.

Another example of the subject matter according to the present disclosure relates to a shrink mechanism for use with a landing gear of an aircraft, the landing gear including an outer cylinder rotatably coupled to a frame of an aircraft about a trunnion axis of rotation and a shock strut assembly movably coupled to the outer cylinder so as to reciprocate along a longitudinal axis of the outer cylinder, the shrink mechanism including a first shrink link member pivotally coupled to the outer cylinder, a second shrink link member coupling the first shrink link member to the shock strut assembly, a crank member pivotally coupled to the outer cylinder, a drive member coupling the crank member to a walking beam (a.k.a. retract actuator beam) of a landing gear retract mechanism, and a driven member coupling the crank member to the first shrink link member.

Still another example of the subject matter according to the present disclosure relates to an aircraft including a frame, and a landing gear coupled to the frame, the landing gear including an outer cylinder rotatably coupled to a frame of an aircraft about a trunnion axis of rotation, a shock strut assembly movably coupled to the outer cylinder so as to reciprocate along a longitudinal axis of the outer cylinder, and a shrink mechanism including a first shrink link member pivotally coupled to the outer cylinder, a second shrink link member coupling the first shrink link member to the shock strut assembly, a crank member pivotally coupled to the outer cylinder, a drive member coupling the crank member to a walking beam (a.k.a. retract actuator beam) of a landing gear retract mechanism, and a driven member coupling the crank member to the first shrink link member.

Further still another example of the subject matter according to the present disclosure relates to a method of operating a landing gear of an aircraft, the method including rotating the landing gear about a trunnion axis of rotation, where the trunnion axis of rotation is defined by an outer cylinder of the landing gear, and moving a shock strut assembly relative to the outer cylinder with a shrink mechanism, where the outer cylinder at least partially surrounds the shock strut assembly and the shrink mechanism includes a first shrink link member pivotally coupled to the outer cylinder, a second shrink link member coupling the first shrink link member to the shock strut assembly, a crank member pivotally coupled to the outer cylinder, a drive member coupling the crank member to a walking beam (a.k.a. retract actuator beam) of a landing gear retract mechanism, and a driven member coupling the crank member to the first shrink link member.

## BRIEF DESCRIPTION OF THE DRAWINGS

Having thus described examples of the present disclosure in general terms, reference will now be made to the accompanying drawings, which are not necessarily drawn to scale, and wherein like references characters designate the same or similar parts throughout the several views, and wherein:

FIGS. **1**A-**1**C are schematic illustrations of an aircraft and landing gear in accordance with one or more aspects of the present disclosure;

FIG. **2** is a schematic perspective view illustration of the landing gear of FIGS. **1**A-**1**C in an extended configuration in accordance with one or more aspects of the present disclosure;

FIGS. **3**A and **3**B are collectively (and should be viewed with each other) a schematic partial cross-sectional side view illustration of a comparison between portions of the landing gear of FIG. **2** in retracted and extended configurations in accordance with one or more aspects of the present disclosure;

FIG. **4** is a schematic perspective partial cross-sectional view illustration of a portion the landing gear of FIG. **2** in an extended configuration in accordance with one or more aspects of the present disclosure;

FIG. **5** is a schematic perspective partial cross-sectional view illustration of the landing gear of FIG. **2** in a retracted configuration in accordance with one or more aspects of the present disclosure;

FIG. **6** is a schematic cross-sectional side view illustration of a portion the landing gear of FIG. **2** in accordance with one or more aspects of the present disclosure;

FIG. **7** is a schematic perspective cross-section view illustration of a portion the landing gear of FIG. **2** in accordance with one or more aspects of the present disclosure;

FIG. **8** is a schematic perspective view illustration of a portion of the landing gear of FIG. **2** in accordance with one or more aspects of the present disclosure;

FIG. **9** is a schematic partial cross-sectional side view illustration of a portion of the landing gear of FIG. **2** in accordance with one or more aspects of the present disclosure;

FIG. **10** is a schematic perspective cross-sectional view illustration of a portion of the landing gear of FIG. **2** in accordance with one or more aspects of the present disclosure;

FIG. **11** is a schematic perspective view illustration of a portion of the landing gear of FIG. **2** in accordance with one or more aspects of the present disclosure;

FIG. **12** is a schematic perspective view illustration of a portion of the landing gear of FIG. **2** in accordance with one or more aspects of the present disclosure;

FIG. **13** is a schematic perspective partial cross-sectional view illustration of a portion of the landing gear of FIG. **2** in accordance with one or more aspects of the present disclosure;

FIG. **14** is a schematic perspective view illustration of a portion of the landing gear of FIG. **2** in accordance with one or more aspects of the present disclosure;

FIG. **15** is a schematic perspective partial cross-sectional view illustration of the landing gear of FIGS. **1**A-**1**C in an extended configuration in accordance with one or more aspects of the present disclosure;

FIG. **16** is a schematic perspective partial cross-sectional view illustration of the landing gear of FIG. **15** in a retracted configuration in accordance with one or more aspects of the present disclosure;

FIGS. **17**A and **17**B are collectively (and should be viewed with each other) a schematic cross-sectional side view illustration of a comparison between portions of the landing gear of FIG. **15** in retracted and extended configurations in accordance with one or more aspects of the present disclosure;

FIG. **18** is a schematic perspective view illustration of a portion of the landing gear of FIG. **15** in accordance with one or more aspects of the present disclosure;

FIG. **19** is a schematic perspective view illustration of a portion of the landing gear of FIG. **15** in accordance with one or more aspects of the present disclosure;

FIG. **20** is a schematic perspective view illustration of a portion of the landing gear of FIGS. **1**A-**1**C in accordance with one or more aspects of the present disclosure;

FIG. **21** is a schematic perspective view illustration of a portion of the landing gear of FIGS. **1**A-**1**C in accordance with one or more aspects of the present disclosure;

FIG. **22** is a schematic perspective view illustration of a portion of the landing gear of FIGS. **1**A-**1**C in accordance with one or more aspects of the present disclosure;

FIG. **23** is an exemplary graph illustrating the shrink length of the landing gear versus the retract angle of the landing gear in accordance with one or more aspects of the present disclosure;

FIG. **24**A is a schematic cross-sectional side view illustration of the landing gear of FIG. **15** in an extended configuration in accordance with one or more aspects of the present disclosure;

FIG. **24**B is a schematic cross-sectional side view illustration of the landing gear of FIG. **15** in a retracted configuration in accordance with one or more aspects of the present disclosure;

FIGS. **25**A-**25**C are schematic perspective view illustrations of a retraction sequence of the landing gear of FIG. **2** in accordance with one or more aspects of the present disclosure;

FIGS. **26**A-**26**C are schematic perspective view illustrations of a retraction sequence of the landing gear of FIG. **15** in accordance with one or more aspects of the present disclosure;

FIG. **27** is a flow chart of a method of retraction of the landing gear of FIGS. **1**A-**1**C in accordance with one or more aspects of the present disclosure;

FIG. **28** is a flow chart of a method of extension of the landing gear of FIGS. **1**A-**1**C in accordance with one or more aspects of the present disclosure; and

FIG. **29** is a block diagram of aircraft production and service methodology.

## DETAILED DESCRIPTION

Referring to FIGS. **1**A-**1**C, **2**, and **15**, an exemplary aircraft **1000** and landing gear **100**, **100**A, **100**B with a shrinking mechanism **130**A, **130**B is illustrated incorporating aspects of the present disclosure. In order to achieve a greater angle of attack/rotation of the aircraft on take-off and/or landing, maintain current static ride heights and current attachment locations of a conventional landing gear, without having to redesign the aircraft, the shrink mechanism **130**A, **130**B for landing gear **100**, **100**A, **100**B described herein increases height of the aircraft during takeoff and shortens a length of the landing gear in a stowing position following takeoff for stowage in the current landing gear bay with little to no modification of the aircraft. In particular, the landing gear **100**, **100**A, **100**B described herein is cost efficient and is not overly complex, while still satisfying the static height, takeoff and/or landing height and stowage requirements of the landing gear.

Illustrative, non-exhaustive examples, which may or may not be claimed, of the subject matter according to the present disclosure are provided below.

The aspects of the present disclosure described herein may provide landing gear which is generally referred to as landing gear **100** and more specifically referred to as landing gear **100**A, **100**B. The landing gear **100**, **100**A, **100**B shrinks when retracted into a wheel well of the aircraft **1000** so that the landing gear **100**, **100**A, **100**B can be stowed within a frame **1001** of the aircraft **1000**. When extended, the landing gear **100**, **100**A, **100**B provides for increased ground clearance so that, e.g., larger more efficient engines can be fitted of the aircraft **1000**. The aspects of the present disclosure described herein provide the landing gear **100**, **100**A, **100**B with the shrink mechanism **130**A, **130**B which generally has a configuration that provides a low static ride height of the aircraft, a tall takeoff height of the aircraft and a shortened landing gear length for stowage of the landing gear **100**, **100**A, **100**B within the aircraft **1000**.

In one aspect, while the landing gear **100**, **100**A, **100**B described herein is described with respect to a commercial passenger jet, referred to herein as the aircraft **1000**, in other aspects the aircraft may be any suitable aircraft having a fixed wing, variable sweep wing, or rotary wing. The landing gear **100**, **100**A, **100**B may also be used in any suitable position on the aircraft **1000**, such as a main landing gear **101** located towards a longitudinal center of the aircraft **1000**, or in other aspects a nose landing gear **102** located towards a longitudinal front of the aircraft **1000**. As will be described herein, the landing gear **100**, **100**A, **100**B is configured to couple to one or more of the frame **1001** and the landing gear components (e.g., landing gear retract mechanism **200** including an actuator **201**, a reaction link **202**, a walking beam **210** (i.e., also referred to as a retract actuator beam), etc.) of the aircraft **1000** for providing the low static ride height, the tall take-off height, and effecting shrinking of the length landing gear **100**, **100**A, **100**B for retraction of the landing gear **100**, **100**A, **100**B.

Referring to FIGS. **1**B and **1**C, the landing gear **100** is illustrated in an extended/deployed and stowed/retracted position. A conventional tall landing gear **105** is also illustrated for comparison of the landing gear attachment locations relative to the frame **1001** of the aircraft **1000**. In one aspect, the landing gear **100** provides the same static ride height A (e.g., the distance from the ground to the lowest point on the aircraft **1000** such as the bottom of the frame **1001**) as the conventional tall landing gear **105** while being coupled to the frame **1001** further inboard, relative to the centerline CL of the frame **1001**, by a predetermined distance B. As can be seen best in FIG. **1**B, upon retraction, the location of the landing gear wheel assembly **119** and wheel axis WA are located at a common location (e.g., within the wheel compartment of the aircraft **1000** with little to no modification of the wheel bay) as illustrated by the retraction path **103** of the conventional tall landing gear **105** and the retraction path **104** of the landing gear **100**. As such, the landing gear **100** may be fit to an aircraft while maintaining the existing conventional landing gear bay of the aircraft, sill waterlines, etc., i.e., the aircraft **1000** does not have to be redesigned in order to accommodate the landing gear **100** and receive the increased takeoff and/or landing height and aircraft rotation benefits of the landing gear **100**.

Referring now to FIGS. **2-10**, in one aspect, the landing gear **100**A includes an outer cylinder **110**, a shock strut assembly **120**, a wheel assembly **119** coupled to the shock strut assembly **120**, and a shrink mechanism **130**A. In one aspect, the landing gear **100**A further includes a cover **114** (FIG. **11**), a sensor actuator arm **300** (FIG. **14**), a sensor **310** (FIG. **11**), a door **400** (FIGS. **20-22**), and a door drive member **410** (FIGS. **20-22**). A landing gear retract mechanism **200** is coupled to the landing gear **100**A for extending/retracting the landing gear **100**A and driving the shrink mechanism **130**A.

The outer cylinder **110** includes a first end **111** and a second end **112** longitudinally spaced from the first end **111** along longitudinal axis **115**. The outer cylinder **110** further includes a shrink link cavity **113** (FIGS. **3**A and **3**B) and an inner cavity **117**. The inner cavity **117** is configured such that the shock strut assembly **120** is at least partially disposed within the inner cavity **117**. The shrink link cavity **113** is configured to at least partially house portions of the shrink mechanism **130**A. In one aspect, the outer cylinder **110** is a single, rigid member such that the shrink link cavity **113** and an inner cavity **117** are integrally formed with the outer cylinder **110**. The outer cylinder **110** is rotatably coupled to the frame **1001** of the aircraft **1000** about a trunnion axis of rotation **1002**, such that the outer cylinder **110** rotates about the trunnion axis of rotation **1002** in direction R**1** (FIG. **2**). In one aspect, the first end **111** of the outer cylinder **110** forms a landing gear trunnion **165** and is rotatably coupled to the frame **1001** of the aircraft **1000** about the trunnion axis of rotation **1002**, effectively coupling the outer cylinder **110** to the frame **1001**. In one aspect, the outer cylinder **110** further includes a cover **114** (FIG. **11**) configured to enclose first and second shrink link members **140**, **150** within the outer cylinder **110**, a fluid drainage aperture **116** (FIG. **10**) configured to drain condensation or fluid that may penetrate/accumulate in the shrink link cavity **113** or the inner cavity **117**, and an over-center stop surface **118** (FIGS. **9**, **17**A, and **17**B).

The shock strut assembly **120** includes a bulkhead **123** (FIG. **6**) movably coupled to the inner cavity **117** of the outer cylinder **110** so as to form a first seal **124** (FIG. **6**) with the inner cavity **117**. The bulkhead **123** is further coupled to the shrink mechanism **130**A to effect reciprocating movement of the shock strut assembly **120** within the inner cavity **117** so as to shrink and extend the landing gear **100**A. The inner cylinder **125** is movably coupled to both the inner cavity **117** of the outer cylinder **110** and the bulkhead **123** so as to form a second seal **126** (FIG. **5**) with the inner cavity **117** and so that the inner cylinder **125** is movable relative to (such as during compression and rebound of the shock strut assembly **120**) and with the bulkhead **123** (such as during shrinking and extending of the landing gear **100**A) within the inner cavity **117** of the outer cylinder **110**. The shrink mechanism **130**A effects relative movement of both the bulkhead **123** and the inner cylinder **125**, as a unit, in directions D**1**, D**2** (FIGS. **3**A and **3**B) so as to one of both increase or decrease a length **1950** (FIG. **1**B) of the landing gear **100**A depending on a respective deployed/extended configuration **800** or retracted/folded configuration **850** of the landing gear **100**A. In one aspect, the length **1950** may be increased or decreased depending on the retracted configuration **850** or the deployed configuration **800** by moving the shock strut assembly **120**, with the shrink mechanism **130**A, by a distance **950**. The distance **950** may be about 10 inches or in other aspects the distance may be more or less than about 10 inches.

Still referring to FIGS. **2-10**, the shrink mechanism **130**A of landing gear **100**A includes the first shrink link member **140**, the second shrink link member **150**, a crank member **160**, a drive member **170**, and a driven member **180**. The crank member **160** includes a first end **161** and a second end **162**. In one aspect, the crank member **160** is rotatably coupled to the outer cylinder **110** about a first axis of rotation **500** such that the crank member **160** rotates about the first axis of rotation **500** in directions R**2**, R**3**. In one aspect, the

crank member **160** is coupled to the outer cylinder **110** between the first end **111** and the second end **112** of the outer cylinder **110**. For example, as illustrated in FIG. **7**, the crank member **160** is coupled to the outer cylinder **110** in any suitable manner such as by a cross-bolt assembly **700** including a cross-bolt **701**, a pivot washer **702**, and a stud **703**. In one aspect, the crank member **160** is coupled to the outer cylinder with a bracket **169** as illustrated in FIG. **8**.

The drive member **170** includes a first end **171** and a second end **172**. The first end **171** of the drive member **170** is rotatably coupled to the walking beam **210** of the landing gear retract mechanism **200** at a walking beam pivot axis **2000** (FIG. **2**) such that the drive member **170** and the walking beam **210** pivot relative to one another about the walking beam pivot axis **2000** in directions R**4**, R**5**. The second end **172** of the drive member **170** is rotatably coupled to the first end **161** of the crank member **160** at a first crank pivot axis **2101** such that the drive member **170** and the crank member **160** pivot relative to one another about the first crank pivot axis **2101** in directions R**6**, R**7**. In one aspect, the drive member **170** is coupled to the crank member **160** with a clevis joint, while in other aspects, they may be coupled together with spherical bearings or any other suitable coupling (it is noted that each of the rotatable couplings between the links of the shrink mechanism **130**A, **130**B described herein may be coupled in a manner that is substantially similar to the rotatable coupling between the drive member **170** and the crank member **160** to transmit torque between each link and to change a direction of the force applied by the walking beam **210** to shrink and extend the landing gear **100**, **100**A, **100**B). The drive member **170** is configured to effectively couple the crank member **160** to the walking beam **210** of the landing gear retract mechanism **200**. The drive member **170**, via the walking beam **210**, drives rotational motion of the crank member **160** about the first axis of rotation **500** in directions R**2**, R**3**. In one aspect, the drive member **170** has an adjustable length **998** (FIG. **4**).

The driven member **180** includes a first end **181** and a second end **182**. The first end **181** is coupled to the second end **162** of the crank member **160** at a second crank pivot axis **2102** such that the driven member **180** and the crank member **160** pivot relative to one another about the second crank pivot axis **2102** in directions R**8**, R**9**. The second end **182** is coupled to the first shrink link member **140**. The driven member **180** is configured to effectively couple the crank member **160** to the first shrink link member **140** such that the crank member **160** drives the first shrink link member **140** in rotation about a second axis of rotation **501**. In one aspect, the drive member **170** and the driven member **180** extend substantially along the longitudinal axis **115** of the outer cylinder **110** adjacent one another. In one aspect, the driven member **180** has an adjustable length **999** (FIG. **4**).

Referring now to FIGS. **3**A-**5**, and **9**-**10**, the first shrink link member **140** includes a first end **141** (FIGS. **9** and **10**) rotatably coupled to the outer cylinder **110** and a second end **142** (FIGS. **9** and **10**) rotatably coupled to the second shrink link member **150**. The first shrink link member **140** is disposed at least partially within the shrink link cavity **113** of the outer cylinder **110**. In one aspect, the first shrink link member **140** is disposed within the shrink link cavity **113** such that the first shrink link member **140** is enclosed by the outer cylinder **110**. For example, the cover **114** (FIG. **11**) may enclose the first shrink link member **140** within the shrink link cavity **113** of the outer cylinder **110**. The cover **114** may include vent apertures **1199** to allow for air flow into and out of the shrink link cavity **113** and the inner cavity **117** during extension and retraction of the shock strut assembly **120** relative to the outer cylinder **110** The first shrink link member **140** is rotatably coupled to the outer cylinder **110** such that the first shrink link member **140** rotates relative to the outer cylinder **110** about the second axis of rotation **501** in directions R**10**, R**11**. The second axis of rotation **501** is spaced, along the longitudinal axis **115** of the outer cylinder **110**, from the first axis of rotation **500**. In one aspect, the first axis of rotation **500** and the second axis of rotation **501** are substantially parallel with one another (as seen in FIG. **2**). In one aspect, the first shrink link member **140** further includes a shrink crank member **190** that couples the first shrink link member **140** to the driven member **180**.

The second shrink link member **150** includes a first end **151** and a second end **152** (FIGS. **9** and **10**). In one aspect, the second shrink link member **150** is disposed within the shrink link cavity **113** such that the second shrink link member **150** is enclosed by the outer cylinder **110**. For example, the cover **114** (FIG. **11**) may enclose the second shrink link member **150** (and the first shrink link member **140**) within the shrink link cavity **113**. The first end **151** of the second shrink link member **150** is rotatably coupled to the bulkhead **123** of the shock strut assembly **120** about axis of rotation **915** (FIGS. **9** and **10**). The second end **152** of the second shrink link member **150** is rotatably coupled to the second end **142** of the first shrink link member **140**, effectively coupling the first shrink link member **140** to the shock strut assembly **120**. The first shrink link member **140** and the second shrink link member **150** are rotatably coupled to each other so as to fold and unfold relative to each other in directions R**12**, R**13**. For example, the driven member **180** is coupled to the first shrink link member **140** so as to effect, under impetus of the drive member **170**, folding and unfolding of the second shrink link member **150** relative to the first shrink link member **140**. As the driven member **180** pivotally coupled to the first shrink link member **140** drives rotation of the first shrink link member **140** and thus folding/unfolding of the first and second shrink link members **140**, **150**, extension or retraction of the shock strut assembly **120** relative to the outer cylinder **110** and along the longitudinal axis **115** is effected. When unfolded, the first shrink link member **140** and the second shrink link member **150** lock in an over-center position **900** (FIG. **9**). In one aspect, an over-center stop surface **118** (FIGS. **9**, **17**A, and **17**B) of the outer cylinder **110** is configured to releasably couple with one or more of the first shrink link member **140** and the second shrink link member **150** to effect over-center locking of the first shrink link member **140** and the second shrink link member **150** in the over-center position **900**. In one aspect, the over-center stop surface **118** is integral with the outer cylinder **110**, while in other aspect, the over-center stop surface **118** is a removable member that may be replaced. The over-center position **900** may be maintained due to a preload on at least one or more of the first shrink link member **140** and the second shrink link member **150**. For example, one or more of the drive member **170**, crank member **160**, and driven member **180** may be sized in length so that, when in the deployed configuration **800**, the shrink mechanism **130**A acts as a spring mechanism that forces the first and second shrink link members **140**, **150** into the over-center position **900** (FIG. **9**) so that one or more of the first and second shrink link members **140**, **150** couples with the over-center stop surface **118**. In the retracted configuration **850**, the preload on the shrink mechanism **130**A may be relaxed compared to that of the deployed configuration **800**.

Referring now to FIGS. **2** and **12-14**, the shrink crank member **190** is coupled to the first shrink link member **140** so that the shrink crank member **190** and the first shrink link member **140** rotate as a unit about the second axis of rotation **501**. The shrink crank member **190** is disposed adjacent the first end **141** of the first shrink link member **140**. In one aspect, a crank member receiver **193** of the first shrink link member **140** is configured to receive the shrink crank member **190** so that the shrink crank member **190** is rotationally fixed relative to the first shrink link member **140**. For example, the shrink crank member **190** may include mating polygonal surfaces **1901-1904** that couple with polygonal surfaces **1941-1944** of the crank member receiver **193**. It is noted that although the mating surfaces are illustrated as having a square configuration, the mating surfaces may have any suitable configuration including triangular, hexagonal, octagonal, splined, etc. that transfers torque between the first shrink link member **140** and the shrink crank member **190**. In one aspect, the shrink crank member **190** is coupled to the first shrink link member **140** with a cross-bolt **898** and a pin **899** (FIG. **13**). In another aspect, the shrink crank member **190** and the first shrink link member **140** may be constructed as a single unitary member. At least part of the shrink crank member **190** extends through the outer cylinder **110**. The driven member **180** is coupled to the shrink crank member **190** at a third crank pivot axis **2103** such that the driven member **180** and the shrink crank member **190** pivot relative to one another about the third crank pivot axis **2103** in directions R**17**, R**18**. The driven member **180** and the shrink crank member **190** pivoting relative to one another about the third crank pivot axis **2103** drives rotation of the first shrink link member **140** about the second axis of rotation **501**. As noted above, rotation of the first shrink link member **140** about the second axis of rotation **501** effects extension and retraction of the shock strut assembly **120** relative to the outer cylinder **110** and along the longitudinal axis **115**.

The sensor actuator arm **300** (FIG. **14**) is coupled to the first shrink link member **140**. The sensor actuator arm **300** is coupled to the first shrink link member **140** so as to rotate with the first shrink link member **140**. The sensor **310** (FIG. **11**) is coupled to the outer cylinder **110** and is configured to sense the sensor actuator arm **300** upon extension of the shock strut assembly **120**. For example, the sensor actuator arm **300** includes a target **301** and the sensor **310** is a proximity sensor configured to sense the target **301**. It is noted that the sensor actuator arm **300** may include any suitable sensor input and the sensor **310** may be any suitable sensor configured to sense the respective sensor input of the sensor actuator arm **300**. The sensor **310** may be coupled to any suitable controller **1005** (FIG. **1**) of the aircraft **1000**, where the controller **1005** is configured to effect an indication to an operator or maintenance crew of the aircraft **1000** that the shrink mechanism **130**A is at a predetermined position relative to, for example, the outer cylinder **110**.

Referring now to FIGS. **15-19**, the landing gear **100**B is substantially similar to landing gear **100**A unless otherwise noted. For example, the landing gear **100**B includes the outer cylinder **110**, the wheel assembly **119**, the shock strut assembly **120**, and a shrink mechanism **130**B. The landing gear retract mechanism **200** is coupled to the landing gear **100**B for extending/retracting the landing gear **100**B and driving the shrink mechanism **130**B.

The shrink mechanism **130**B of landing gear **100**B includes crank member **1560**, drive member **1570**, driven member **1580**, and the first and second shrink link members **140**, **150**. Each component of the shrink mechanism **130**B of the landing gear **100**B functions in a manner substantially similar to that of the components of the shrink mechanism **130**A of landing gear **100**A. For example, the shrink mechanism **130**B effects extension and retraction of the shock strut assembly **120** relative to the outer cylinder **110** and along the longitudinal axis **115** to increase or decrease length **1950** (FIG. **1**B) of the landing gear **100**B depending on a respective deployed configuration **800** or a retracted configuration **850** of the landing gear **100**B. In one aspect, the length **1950** may be increased or decreased depending on the retracted configuration **850** or the deployed configuration **800** by moving the shock strut assembly **120**, with the shrink mechanism **130**B, by a distance **950**. The distance **950** may be about 10 inches or in other aspects the distance may be more or less than about 10 inches.

In this aspect, the crank member **1560** is pivotally coupled to the outer cylinder **110** at the first end **111**, relative to the trunnion axis of rotation **1002**, of the outer cylinder **110** opposite the second end **112** of the outer cylinder **110**. Here, the crank member **1560** is coupled to the outer cylinder **110** about first axis of rotation **705** as illustrated in FIGS. **15**, **17**A, and **17**B. In this aspect, the first axis of rotation **705** and the second axis of rotation **501** cross one another (FIG. **16**). It is noted that the crank member **1560** may be coupled to the outer cylinder **110** in any suitable manner that effects rotational motion of the crank member **1560** about the first axis of rotation **705**. In this aspect, the driven member **1580** is pivotally coupled to the first shrink link member **140** adjacent the second end **142** so as to drive rotation of the first shrink link member **140** about the second axis of rotation **501** and effect extension or retraction of the shock strut assembly **120** relative to the outer cylinder **110** and along the longitudinal axis **115** in a manner similar to that of landing gear **100**A. In one aspect, the landing gear **100**B may further include the door **400** (FIGS. **20-22**) and the door drive member **410** (FIGS. **20-22**)

Referring now to FIGS. **20-22**, the door **400** is pivotally coupled to the frame **1001** about a door pivot axis **401**. In one aspect, the door drive member **410** couples the door **400** to the outer cylinder **110** so that rotation of the outer cylinder **110** about the trunnion axis of rotation **1002** effects pivoting of the door **400**, about the door pivot axis **401**, between opened (when the landing gear **100**A, **100**B is extended as in FIG. **20**) and closed (when the landing gear **100**A, **100**B is retracted as in FIGS. **21** and **22**) positions. In one aspect, the door drive member **410** is an articulated member that couples the door **400** to the walking beam **210** (FIGS. **20** and **21**) so that rotation of the outer cylinder **110** about the trunnion axis of rotation **1002** and movement of the walking beam **210** effects pivoting of the door **400** about the door pivot axis **401** between the open and closed positions. In other aspects, the door drive member **410** may be a single rigid member or any other suitable member to effect pivoting of the door **400** between the open and closed positions.

Referring now to FIGS. **3**A, **3**B, **17**A, **17**B, and **23**, an exemplary graph for the landing gear **100**A, **100**B is illustrated showing shrink length (e.g., distance **950**) versus retract angle (e.g., the angle of the landing gear **100**A, **100**B relative to the frame **1001** of the aircraft **1000** as the landing gear **100**A, **100**B rotates about the trunnion axis of rotation **1002**). As the landing gear **100**A, **100**B is retracted upon, e.g., takeoff, the bulkhead **123** position is tracked indicating the distance **950** the bulkhead **123** travels relative to the outer cylinder **110**. As illustrated in FIG. **23**, the distance **950** increases to about 10 inches (and the landing gear **100**A, **100**B shrinks a corresponding distance to shrink the length **1950**) as the landing gear **100**A, **100**B retracts form a zero

(0) degree angle (i.e., the landing gear **100**A, **100**B extended) to between about a sixty (60) degree angle and about an eighty (80) degree angle.

Referring now to FIGS. **2**, **24**A, **24**B, **25**A-**25**C, **26**A-**26**C and **27**, a method **2700** for operating, for example, landing gear **100**A, **100**B is illustrated. In one aspect, the landing gear **100**A, **100**B is situated in a deployed configuration **800** such as during ground operations, take-off, and landing of the aircraft **1000**. While the landing gear **100**A is in a deployed configuration **800**, the shrink mechanism **130**A is in an extended position **801** as illustrated in, e.g., FIGS. **24**A, **25**A, and **26**A.

In order to retract the landing gear **100**A, **100**B, for example, after takeoff the landing gear retract mechanism **200** is operated to rotate the landing gear **100**A, **100**B about the trunnion axis of rotation **1002** (FIG. **27**, Block **2701**), where the trunnion axis of rotation is defined by the outer cylinder **110** of the landing gear **100**A, **100**B. For example, the walking beam **210** is actuated by the actuator **201** to rotate the outer cylinder **110** about the trunnion axis of rotation **1002** and retract the landing gear **100**A, **100**B. The outer cylinder **110** is rotatably fixed to the frame **1001** of the aircraft **1000** about the trunnion axis of rotation **1002**. Force F (FIGS. **25**A and **26**A) is applied, by the actuator **201**, to the walking beam **210**. Due to the outer cylinder **110** being rotatably fixed to the frame **1001** of the aircraft **1000**, the outer cylinder **110** is forced to rotate about the trunnion axis of rotation **1002** in direction R1R (FIGS. **25**A and **26**A). As to the outer cylinder **110** rotates about the trunnion axis of rotation **1002** in direction R1R, the shock strut assembly **120** is moved relative to the outer cylinder **110** in direction D**1** by the shrink mechanism **130**A, **130**B (FIG. **27**, Block **2702**). The drive member **170**, **1570** of the shrink mechanism **130**A, **130**B being rotatably coupled to the walking beam **210**, rotates relative to the crank member **160**, **1560** about the first crank pivot axis **2101** in direction R**7** which forces the crank member **160**, **1560** to rotate about the first axis of rotation **500**, **705** in direction R**2** (FIG. **27**, Block **2703**). With respect to landing gear **100**A, as the drive member **170** and the crank member **160** are rotated relative to one another, the driven member **180** is forced to pivot relative to the shrink crank member **190** about the third crank pivot axis **2103** in direction R**17** which rotates the first shrink link member **140** and the shrink crank member **190** as a unit about the second axis of rotation **501** in direction R**10** (FIG. **27**, Block **2704**). With respect to landing gear **100**B, as the drive member **1570** and the crank member **1560** are rotated relative to one another, the driven member **1580** is forced to pivot relative to the first shrink link member **140** about the third crank pivot axis **2103**A in direction R**17** which rotates the first shrink link member **140** about the second axis of rotation **501** in direction R**10** (FIG. **27**, Block **2704**).

As the first shrink link member **140** rotates about the second axis of rotation **501** in direction R**10**, the over-center position **900** is unlocked (i.e., the first shrink link member **140** folds relative to the second shrink link member **150**) to effect moving of the inner cylinder **125** and the bulkhead **123** of the shock strut assembly **120** in direction D**1** and shrinking of the landing gear **100**A, **100**B (FIG. **27**, Block **2705**). The first shrink link member **140** and second shrink link member **150** fold relative to each other and drive the shock strut assembly **120** along the longitudinal axis **115** from the second end **112** of the outer cylinder **110** to the first end **111** of the outer cylinder **110** (FIG. **27**, Block **2706**). As the landing gear **100**A, **100**B shrinks and is rotated into the retracted configuration **850** (shown in FIGS. **25**C and **26**C), the inner cylinder **125**, transiting from the second end **112** to the first end **111** of the outer cylinder **110**, carries the wheel assembly **119** towards the first end **111** of the outer cylinder **110** to shrink the length **1950** (FIG. **1**B) of the landing gear **100**A, **100**B.

Referring now to FIGS. **2**, **24**A, **24**B, **25**A-**25**C, **26**A-**26**C and **28**, a method **2800** for extending landing gear **100**A, **100**B is illustrated. The landing gear **100**A, **100**B is situated in a retracted configuration **850** (FIGS. **25**C and **26**C) disposed within the frame **1001** of the aircraft **1000**. While the landing gear **100**A, **100**B is in the retracted configuration **850**, the shrink mechanism **130**A, **130**B is in a retracted position **851** as illustrated in, e.g., FIGS. **25**C and **26**C.

In order to extend the landing gear **100**A, **100**B, for example, before landing, a sequence opposite to that described above is initiated by, e.g., deploying the landing gear **100**A, **100**B under gravitational forces (FIG. **28**, Block **2801**). As the outer cylinder **110** rotates about the trunnion axis of rotation **1002** in direction R**1**E and travels to deployed configuration **800** under gravitational forces, the shrink mechanism **130**A, **130**B is extended (FIG. **28**, Block **2802**). For example, the drive member **170**, **1570** of the shrink mechanism **130**A, **130**B being rotatably coupled to the walking beam **210** rotates relative to the crank member **160**, **1560** about the first crank pivot axis **2101** in direction R**6** which forces the crank member **160**, **1560** to rotate about the first axis of rotation **500**, **705** in direction R**3** (FIG. **28**, Block **2803**). As the drive member **170**, **1570** and the crank member **160**, **1560** are rotated relative to one another, the driven member **180** is forced to pivot relative to the shrink crank member **190** about the third crank pivot axis **2103** in direction R**18** which rotates the first shrink link member **140** and the shrink crank member **190** as a unit about the second axis of rotation **501** in direction R**11** (or in the case of landing gear **100**B the driven member **1580** pivots relative to the first shrink link member **140** in direction R**18** so as to rotate the first shrink link member **140** about the second axis of rotation **501** in direction R**11**) (FIG. **28**, Block **2804**). As the first shrink link member **140** rotates in direction R**11**, the first shrink link member **140** and second shrink link member **150** unfold relative to each other and drive the shock strut assembly **120** along the longitudinal axis **115** from the first end **111** of the outer cylinder **110** to the second end **112** of the outer cylinder **110** (FIG. **28**, Block **2805**). The first shrink link member **140** and second shrink link member **150** unfold to an extended position and are locked in the over-center position **900** (FIG. **28**, Block **2806**). As the landing gear **100**A, **100**B deploys the preload in the shrink mechanism **130**A, **130**B increases so as to hold the first shrink link member **140** and the second shrink link member **150** in the over-center position **900**.

Examples of the present disclosure may be described in the context of aircraft manufacturing and service method **2900** as shown in FIG. **29**. In other aspects, the examples of the present disclosure may be applied in any suitable industry, such as, e.g., automotive, maritime and aerospace. With respect to aircraft manufacturing, during pre-production, illustrative method **2900** may include specification and design (FIG. **29**, Block **2904**) of aircraft **1000** and material procurement (FIG. **29**, Block **2906**). During production, component and subassembly manufacturing (FIG. **29**, Block **2908**) and system integration (FIG. **29**, Block **2910**) of aircraft **1000** may take place, which may include manufacturing and installation of the landing gear **100**. Thereafter, aircraft **1000** may go through certification and delivery (FIG. **29**, Block **2912**) to be placed in service (FIG. **29**, Block **2914**). While in service, aircraft **1000** may be sched-

uled for routine maintenance and service (FIG. **29**, Block **2916**). Routine maintenance and service may include modification, reconfiguration, refurbishment, etc. of one or more systems of aircraft **1000**, which may include installation of the landing gear **100** as described herein.

Each of the processes of illustrative method **2900** may be performed or carried out by a system integrator, a third party, and/or an operator (e.g., a customer). For the purposes of this description, a system integrator may include, without limitation, any number of aircraft manufacturers and major-system subcontractors; a third party may include, without limitation, any number of vendors, subcontractors, and suppliers; and an operator may be an airline, leasing company, military entity, service organization, and so on.

Apparatus(es) and method(s) shown or described herein may be employed during any one or more of the stages of the manufacturing and service method **2900**. For example, components or subassemblies corresponding to component and subassembly manufacturing (FIG. **29**, Block **2908**) may be fabricated or manufactured in a manner similar to components or subassemblies produced while aircraft **1000** is in service (FIG. **29**, Block **2914**). Also, one or more examples of the apparatus(es), method(s), or combination thereof may be utilized during production of the aircraft **1000**, for example, by substantially expediting assembly of or reducing the cost of aircraft **1000**. Similarly, one or more examples of the apparatus or method realizations, or a combination thereof, may be utilized, for example and without limitation, while aircraft **1000** is in service (FIG. **29**, Block **2914**) and/or during maintenance and service (FIG. **29**, Block **2916**).

The following clauses (A1-D19) are provided in accordance with the aspects of the present disclosure:

A1. A landing gear comprising:

an outer cylinder rotatably coupled to a frame of an aircraft about a trunnion axis of rotation;

a shock strut assembly movably coupled to the outer cylinder so as to reciprocate along a longitudinal axis of the outer cylinder; and

a shrink mechanism including

a first shrink link member pivotally coupled to the outer cylinder,

a second shrink link member coupling the first shrink link member to the shock strut assembly,

a crank member pivotally coupled to the outer cylinder,

a drive member coupling the crank member to a walking beam (a.k.a. retract actuator beam) of a landing gear retract mechanism, and

a driven member coupling the crank member to the first shrink link member.

A2. The landing gear of clause A1, wherein:

the crank member pivots about a first axis of rotation; and

the first shrink link member pivots about a second axis of rotation that is spaced, along the longitudinal axis of the outer cylinder, from the first axis of rotation.

A3. The landing gear of clause A2, wherein the first axis of rotation and the second axis of rotation are substantially parallel with one another.

A4. The landing gear of clause A2, wherein the drive member and the driven member extend substantially along the longitudinal axis adjacent one another.

A5. The landing gear of clause A2, wherein the first axis of rotation and the second axis of rotation cross one another.

A6. The landing gear of clause A1, further comprising:

a shrink crank member coupled to the first shrink link so that the shrink crank member and the first shrink link rotate as a unit; and

wherein the driven member is coupled to the shrink crank member so as to drive rotation of the first shrink link and effect extension and retraction of the shock strut assembly relative to the outer cylinder and along the longitudinal axis.

A7. The landing gear of clause A6, wherein the first shrink link includes a first end rotatably coupled to the outer cylinder and a second end rotatably coupled to the second shrink link, the shrink crank member being disposed adjacent the first end of the first shrink link.

A8. The landing gear of clause A6, wherein the first shrink link includes a crank member receiver configured to receive the shrink crank member so that the shrink crank member is rotationally fixed relative to the first shrink link.

A9. The landing gear of clause A8, wherein the crank member receiver includes polygonal surfaces and the shrink crank member includes mating polygonal surfaces that couple with the polygonal surfaces of the crank member receiver.

A10. The landing gear of clause A6, wherein at least part of the shrink crank member extends through the outer cylinder.

A11. The landing gear of clause A1, further comprising:

a sensor actuator arm coupled to the first shrink link so as to rotate with the first shrink link; and

a sensor coupled to the outer cylinder;

wherein the sensor is configured to sense the sensor actuator arm upon extension of the shock strut assembly.

A12. The landing gear of clause A11, wherein the sensor actuator arm includes a target and the sensor is a proximity sensor configured to sense the target.

A13. The landing gear of clause A1, wherein the outer cylinder includes a shrink link cavity and the first shrink link member and the second shrink link member are disposed within the shrink link cavity and are enclosed by the outer cylinder.

A14. The landing gear of clause A13, wherein the outer cylinder includes a cover configured to enclose the first shrink link member and the second shrink link member within the shrink link cavity.

A15. The landing gear of clause A13, wherein the shrink link cavity includes a fluid drainage aperture.

A16. The landing gear of clause A1, wherein:

the first shrink link includes a first end rotatably coupled to the outer cylinder and a second end rotatably coupled to the second shrink link; and

the driven member is pivotally coupled to the first shrink link adjacent the second end so as to drive rotation of the first shrink link and effect extension or retraction of the shock strut assembly relative to the outer cylinder and along the longitudinal axis.

A17. The landing gear of clause A1, wherein the driven member is coupled to the first shrink link so as to effect, under impetus of the drive member, folding and unfolding of the second shrink link relative to the first shrink link.

A18. The landing gear of clause A1, wherein one or more of the drive member and the driven member has an adjustable length.

A19. The landing gear of clause A1, wherein the outer cylinder includes a first end having the trunnion axis of

rotation and a second end longitudinally spaced from the first end, the crank member being pivotally coupled to the outer cylinder between the first end and the second end.

A20. The landing gear of clause A1, wherein the outer cylinder includes a first end having the trunnion axis of rotation and a second end longitudinally spaced from the first end, the crank member being pivotally coupled to the outer cylinder at the first end opposite, relative to the trunnion axis of rotation, the second end.

A21. The landing gear of clause A1, wherein the outer cylinder includes a shrink link cavity and the first shrink link member and the second shrink link member are disposed within the shrink link cavity.

A22. The landing gear of clause A21, wherein the shrink link cavity includes a fluid drainage aperture.

A23. The landing gear of clause A1, wherein the first shrink link member and the second shrink link member are rotatably coupled to each other so as to fold and unfold relative to each other and lock in an over-center position when unfolded.

A24. The landing gear of clause A23, wherein the outer cylinder includes an over-center stop surface configured to couple with one or more of the first shrink link member and the second shrink link member to effect over-center locking of the first shrink link member and the second shrink link member.

A25. The landing gear of clause A1, further comprising:

a door pivotally coupled to the frame about a door pivot axis; and

a door drive member coupling the door to the outer cylinder so that rotation of the outer cylinder about the trunnion axis of rotation effects pivoting of the door about the door pivot axis.

A26. The landing gear of clause A1, further comprising:

a door pivotally coupled to the frame about a door pivot axis; and

a door drive member coupling the door to the walking beam so that rotation of the outer cylinder about the trunnion axis of rotation effects pivoting of the door about the door pivot axis.

A27. The landing gear of clause A1, wherein the outer cylinder includes an inner cavity and the shock strut assembly comprises:

a bulk head movably coupled to the inner cavity so as to form a first seal with the inner cavity, the bulk head being coupled to the shrink mechanism; and

an inner cylinder movably coupled to both the inner cavity and the bulk head so as to form a second seal with the inner cavity and so that the inner cylinder is movable with the bulk head relative to the outer cylinder;

wherein the shrink mechanism effects relative movement of both the bulk head and the inner cylinder so as to one of both increase or decrease a length of the landing gear depending on a respective deployed or retracted configuration of the landing gear.

B1. A shrink mechanism for use with a landing gear of an aircraft, the landing gear including an outer cylinder rotatably coupled to a frame of an aircraft about a trunnion axis of rotation and a shock strut assembly movably coupled to the outer cylinder so as to reciprocate along a longitudinal axis of the outer cylinder, the shrink mechanism comprising:

a first shrink link member pivotally coupled to the outer cylinder,

a second shrink link member coupling the first shrink link member to the shock strut assembly,

a crank member pivotally coupled to the outer cylinder,

a drive member coupling the crank member to a walking beam (a.k.a. retract actuator beam) of a landing gear retract mechanism, and

a driven member coupling the crank member to the first shrink link member.

B2. The shrink mechanism of clause B1, wherein:

the crank member pivots about a first axis of rotation; and

the first shrink link member pivots about a second axis of rotation that is spaced, along the longitudinal axis of the outer cylinder, from the first axis of rotation.

B3. The shrink mechanism of clause B2, wherein the first axis of rotation and the second axis of rotation are substantially parallel with one another.

B4. The shrink mechanism of clause B2, wherein the drive member and the driven member extend substantially along the longitudinal axis adjacent one another.

B5. The shrink mechanism of clause B2, wherein the first axis of rotation and the second axis of rotation cross one another.

B6. The shrink mechanism of clause B1, further comprising:

a shrink crank member coupled to the first shrink link so that the shrink crank member and the first shrink link rotate as a unit; and

wherein the driven member is coupled to the shrink crank member so as to drive rotation of the first shrink link and effect extension and retraction of the shock strut assembly relative to the outer cylinder and along the longitudinal axis.

B7. The shrink mechanism of clause B6, wherein the first shrink link includes a first end rotatably coupled to the outer cylinder and a second end rotatably coupled to the second shrink link, the shrink crank member being disposed adjacent the first end of the first shrink link.

B8. The shrink mechanism of clause B6, wherein the first shrink link includes a crank member receiver configured to receive the shrink crank member so that the shrink crank member is rotationally fixed relative to the first shrink link.

B9. The shrink mechanism of clause B8, wherein the crank member receiver includes polygonal surfaces and the shrink crank member includes mating polygonal surfaces that couple with the polygonal surfaces of the crank member receiver.

B10. The shrink mechanism of clause B6, wherein at least part of the shrink crank member extends through the outer cylinder.

B11. The shrink mechanism of clause B1, further comprising:

a sensor actuator arm coupled to the first shrink link so as to rotate with the first shrink link; and

a sensor coupled to the outer cylinder;

wherein the sensor is configured to sense the sensor actuator arm upon extension of the shock strut assembly.

B12. The shrink mechanism of clause B11, wherein the sensor actuator arm includes a target and the sensor is a proximity sensor configured to sense the target.

B13. The shrink mechanism of clause B1, wherein the outer cylinder includes a shrink link cavity and the first shrink link member and the second shrink link member are disposed within the shrink link cavity and are enclosed by the outer cylinder.

B14. The shrink mechanism of clause B1, wherein:

the first shrink link includes a first end rotatably coupled to the outer cylinder and a second end rotatably coupled to the second shrink link; and

the driven member is pivotally coupled to the first shrink link adjacent the second end so as to drive rotation of the first shrink link and effect extension or retraction of the shock strut assembly relative to the outer cylinder and along the longitudinal axis.

B15. The shrink mechanism of clause B1, wherein the driven member is coupled to the first shrink link so as to effect, under impetus of the drive member, folding and unfolding of the second shrink link relative to the first shrink link.

B16. The shrink mechanism of clause B1, wherein one or more of the drive member and the driven member has an adjustable length.

B17. The shrink mechanism of clause B1, wherein the outer cylinder includes a first end having the trunnion axis of rotation and a second end longitudinally spaced from the first end, the crank member being pivotally coupled to the outer cylinder between the first end and the second end.

B18. The shrink mechanism of clause B1, wherein the outer cylinder includes a first end having the trunnion axis of rotation and a second end longitudinally spaced from the first end, the crank member being pivotally coupled to the outer cylinder at the first end opposite, relative to the trunnion axis of rotation, the second end.

B19. The shrink mechanism of clause B1, wherein the outer cylinder includes a shrink link cavity and the first shrink link member and the second shrink link member are disposed within the shrink link cavity.

B20. The shrink mechanism of clause B1, wherein the first shrink link member and the second shrink link member are rotatably coupled to each other so as to fold and unfold relative to each other and lock in an over-center position when unfolded.

B21. The shrink mechanism of clause B20, wherein the outer cylinder includes an over-center stop surface configured to couple with one or more of the first shrink link member and the second shrink link member to effect over-center locking of the first shrink link member and the second shrink link member.

C1. An aircraft comprising:

a frame; and

a landing gear coupled to the frame, the landing gear including

an outer cylinder rotatably coupled to a frame of an aircraft about a trunnion axis of rotation;

a shock strut assembly movably coupled to the outer cylinder so as to reciprocate along a longitudinal axis of the outer cylinder; and

a shrink mechanism including

a first shrink link member pivotally coupled to the outer cylinder,

a second shrink link member coupling the first shrink link member to the shock strut assembly,

a crank member pivotally coupled to the outer cylinder,

a drive member coupling the crank member to a walking beam (a.k.a. retract actuator beam) of a landing gear retract mechanism, and

a driven member coupling the crank member to the first shrink link member.

C2. The aircraft of clause C1, wherein:

the crank member pivots about a first axis of rotation; and

the first shrink link member pivots about a second axis of rotation that is spaced, along the longitudinal axis of the outer cylinder, from the first axis of rotation.

C3. The aircraft of clause C2, wherein the first axis of rotation and the second axis of rotation are substantially parallel with one another.

C4. The aircraft of clause C2, wherein the drive member and the driven member extend substantially along the longitudinal axis adjacent one another.

C5. The aircraft of clause C2, wherein the first axis of rotation and the second axis of rotation cross one another.

C6. The aircraft of clause C1, further comprising:

a shrink crank member coupled to the first shrink link so that the shrink crank member and the first shrink link rotate as a unit; and

wherein the driven member is coupled to the shrink crank member so as to drive rotation of the first shrink link and effect extension and retraction of the shock strut assembly relative to the outer cylinder and along the longitudinal axis.

C7. The aircraft of clause C6, wherein the first shrink link includes a first end rotatably coupled to the outer cylinder and a second end rotatably coupled to the second shrink link, the shrink crank member being disposed adjacent the first end of the first shrink link.

C8. The aircraft of clause C6, wherein the first shrink link includes a crank member receiver configured to receive the shrink crank member so that the shrink crank member is rotationally fixed relative to the first shrink link.

C9. The aircraft of clause C8, wherein the crank member receiver includes polygonal surfaces and the shrink crank member includes mating polygonal surfaces that couple with the polygonal surfaces of the crank member receiver.

C10. The aircraft of clause C6, wherein at least part of the shrink crank member extends through the outer cylinder.

C11. The aircraft of clause C1, further comprising:

a sensor actuator arm coupled to the first shrink link so as to rotate with the first shrink link; and

a sensor coupled to the outer cylinder;

wherein the sensor is configured to sense the sensor actuator arm upon extension of the shock strut assembly.

C12. The aircraft of clause C11, wherein the sensor actuator arm includes a target and the sensor is a proximity sensor configured to sense the target.

C13. The aircraft of clause C1, wherein the outer cylinder includes a shrink link cavity and the first shrink link member and the second shrink link member are disposed within the shrink link cavity and are enclosed by the outer cylinder.

C14. The aircraft of clause C13, wherein the outer cylinder includes a cover configured to enclose the first shrink link member and the second shrink link member within the shrink link cavity.

C15. The aircraft of clause C13, wherein the shrink link cavity includes a fluid drainage aperture.

C16. The aircraft of clause C1, wherein:

the first shrink link includes a first end rotatably coupled to the outer cylinder and a second end rotatably coupled to the second shrink link; and

the driven member is pivotally coupled to the first shrink link adjacent the second end so as to drive rotation of the first shrink link and effect extension or retraction of the shock strut assembly relative to the outer cylinder and along the longitudinal axis.

C17. The aircraft of clause C1, wherein the driven member is coupled to the first shrink link so as to effect, under impetus of the drive member, folding and unfolding of the second shrink link relative to the first shrink link.

C18. The aircraft of clause C1, wherein one or more of the drive member and the driven member has an adjustable length.

C19. The aircraft of clause C1, wherein the outer cylinder includes a first end having the trunnion axis of rotation and a second end longitudinally spaced from the first end, the crank member being pivotally coupled to the outer cylinder between the first end and the second end.

C20. The aircraft of clause C1, wherein the outer cylinder includes a first end having the trunnion axis of rotation and a second end longitudinally spaced from the first end, the crank member being pivotally coupled to the outer cylinder at the first end opposite, relative to the trunnion axis of rotation, the second end.

C21. The aircraft of clause C1, wherein the outer cylinder includes a shrink link cavity and the first shrink link member and the second shrink link member are disposed within the shrink link cavity.

C22. The aircraft of clause C21, wherein the shrink link cavity includes a fluid drainage aperture.

C23. The aircraft of clause C1, wherein the first shrink link member and the second shrink link member are rotatably coupled to each other so as to fold and unfold relative to each other and lock in an over-center position when unfolded.

C24. The aircraft of clause C23, wherein the outer cylinder includes an over-center stop surface configured to couple with one or more of the first shrink link member and the second shrink link member to effect over-center locking of the first shrink link member and the second shrink link member.

C25. The aircraft of clause C1, further comprising:

a door pivotally coupled to the frame about a door pivot axis; and

a door drive member coupling the door to the outer cylinder so that rotation of the outer cylinder about the trunnion axis of rotation effects pivoting of the door about the door pivot axis.

C26. The aircraft of clause C1, further comprising:

a door pivotally coupled to the frame about a door pivot axis; and

a door drive member coupling the door to the walking beam so that rotation of the outer cylinder about the trunnion axis of rotation effects pivoting of the door about the door pivot axis.

C27. The aircraft of clause C1, wherein the outer cylinder includes an inner cavity and the shock strut assembly comprises:

a bulk head movably coupled to the inner cavity so as to form a first seal with the inner cavity, the bulk head being coupled to the shrink mechanism; and

an inner cylinder movably coupled to both the inner cavity and the bulk head so as to form a second seal with the inner cavity and so that the inner cylinder is movable with the bulk head relative to the outer cylinder;

wherein the shrink mechanism effects relative movement of both the bulk head and the inner cylinder so as to one of both increase or decrease a length of the landing gear depending on a respective deployed or retracted configuration of the landing gear.

D1. A method of operating a landing gear of an aircraft, the method comprising:

rotating the landing gear about a trunnion axis of rotation, where the trunnion axis of rotation is defined by an outer cylinder of the landing gear; and

moving a shock strut assembly relative to the outer cylinder with a shrink mechanism, where the outer cylinder at least partially surrounds the shock strut assembly and the shrink mechanism includes:

a first shrink link member pivotally coupled to the outer cylinder,

a second shrink link member coupling the first shrink link member to the shock strut assembly,

a crank member pivotally coupled to the outer cylinder,

a drive member coupling the crank member to a walking beam (a.k.a. retract actuator beam) of a landing gear retract mechanism, and

a driven member coupling the crank member to the first shrink link member.

D2. The method of clause D1, further comprising:

pivoting the crank member about a first axis of rotation; and

pivoting the first shrink link member about a second axis of rotation that is spaced from the first axis of rotation along a longitudinal axis of the outer cylinder;

wherein the first axis of rotation and the second axis of rotation are substantially parallel with one another.

D3. The method of clause D1, further comprising:

pivoting the crank member about a first axis of rotation; and

pivoting the first shrink link member about a second axis of rotation that is spaced from the first axis of rotation along a longitudinal axis of the outer cylinder;

wherein the drive member and the driven member extend substantially along the longitudinal axis adjacent one another.

D4. The method of clause D1, further comprising:

pivoting the crank member about a first axis of rotation; and

pivoting the first shrink link member about a second axis of rotation that is spaced from the first axis of rotation along a longitudinal axis of the outer cylinder;

wherein the first axis of rotation and the second axis of rotation cross one another.

D5. The method of clause D1, further comprising:

coupling a shrink crank member coupled to the first shrink link so that the shrink crank member and the first shrink link rotate as a unit; and

driving rotation of the first shrink link, with the driven member coupled to the shrink crank member, and effecting extension and retraction of the shock strut assembly relative to the outer cylinder and along a longitudinal axis of the outer cylinder.

D6. The method of clause D5, further comprising:

rotatably coupling a first end of the first shrink link rotatably to the outer cylinder; and

rotatably coupling a second end of the first shrink link to the second shrink link;

wherein the shrink crank member is disposed adjacent the first end of the first shrink link.

D7. The method of clause D5, wherein the first shrink link includes a crank member receiver configured to receive

the shrink crank member so that the shrink crank member is rotationally fixed relative to the first shrink link.

D8. The method of clause D1, further comprising:

sensing, with a sensor, a sensor actuator arm upon extension of the shock strut assembly wherein the sensor actuator arm is coupled to the first shrink link so as to rotate with the first shrink link and the sensor coupled to the outer cylinder.

D9. The method of clause D8, further comprising sensing a target of the sensor actuator arm with the sensor, where the sensor comprises a proximity sensor.

D10. The method of clause D1, wherein:

rotatably coupling a first end of the first shrink link to the outer cylinder; and

rotatably coupling a second end of the first shrink link to the second shrink link; and

driving rotation of the first shrink link, with the driven member that is pivotally coupled to the first shrink link adjacent the second end, and effecting extension or retraction of the shock strut assembly relative to the outer cylinder and along a longitudinal axis of the outer cylinder.

D11. The method of clause D1, further comprising folding and unfolding of the second shrink link relative to the first shrink link with the driven member, that is coupled to the first shrink link, under impetus of the drive member.

D12. The method of clause D1, further comprising adjusting a length of one or more of the drive member and the driven member.

D13. The method of clause D1, further comprising pivotally coupling the crank member to the outer cylinder between a first end of the outer cylinder and a second end of the outer cylinder.

D14. The method of clause D1, further comprising pivotally coupling the crank member to the outer cylinder at a first end of the outer cylinder opposite, relative to a trunnion axis of rotation, a second end of the outer cylinder, wherein the first end has the trunnion axis of rotation and the second end is longitudinally spaced from the first end.

D15. The method of clause D1, further comprising locking the first shrink link member and the second shrink link member in an over-center position when unfolded, wherein the first shrink link member and the second shrink link member are rotatably coupled to each other so as to fold and unfold relative to each other.

D16. The method of clause D15, stopping relative movement between the first shrink link and the second shrink link with an over-center stop surface of the outer cylinder to effect over-center locking of the first shrink link member and the second shrink link member.

D17. The method of clause D1, further comprising:

pivotally coupling a door to a frame of the aircraft about a door pivot axis; and

pivoting the door about the door pivot axis with a door drive member coupling the door to the outer cylinder, where rotation of the outer cylinder about the trunnion axis of rotation effects pivoting of the door about the door pivot axis.

D18. The method of clause D1, further comprising:

pivotally coupling a door to a frame of the aircraft about a door pivot axis; and

pivoting the door about the door pivot axis with a door drive member coupling the door to the walking beam, where rotation of the outer cylinder about the trunnion axis of rotation effects pivoting of the door about the door pivot axis.

D19. The method of clause D1, wherein the outer cylinder includes an inner cavity and the method further comprises:

moving, with the shrink mechanism, both a bulk head of the shock strut assembly and an inner cylinder of the shock strut assembly so as to increase or decrease a length of the landing gear depending on a respective deployed or retracted configuration of the landing gear; and

wherein:

the bulk head is movably coupled to the inner cavity so as to form a first seal with the inner cavity, the bulk head being coupled to the shrink mechanism; and

the inner cylinder is movably coupled to both the inner cavity and the bulk head so as to form a second seal with the inner cavity and so that the inner cylinder is movable with the bulk head relative to the outer cylinder.

In the figures, referred to above, solid lines, if any, connecting various elements and/or components may represent mechanical, electrical, fluid, optical, electromagnetic, wireless and other couplings and/or combinations thereof. As used herein, "coupled" means associated directly as well as indirectly. For example, a member A may be directly associated with a member B, or may be indirectly associated therewith, e.g., via another member C. It will be understood that not all relationships among the various disclosed elements are necessarily represented. Accordingly, couplings other than those depicted in the drawings may also exist. Dashed lines, if any, connecting blocks designating the various elements and/or components represent couplings similar in function and purpose to those represented by solid lines; however, couplings represented by the dashed lines may either be selectively provided or may relate to alternative examples of the present disclosure. Likewise, elements and/or components, if any, represented with dashed lines, indicate alternative examples of the present disclosure. One or more elements shown in solid and/or dashed lines may be omitted from a particular example without departing from the scope of the present disclosure. Environmental elements, if any, are represented with dotted lines. Virtual (imaginary) elements may also be shown for clarity. Those skilled in the art will appreciate that some of the features illustrated in the figures, may be combined in various ways without the need to include other features described in the figures, other drawing figures, and/or the accompanying disclosure, even though such combination or combinations are not explicitly illustrated herein. Similarly, additional features not limited to the examples presented, may be combined with some or all of the features shown and described herein.

In FIGS. **27-29**, referred to above, the blocks may represent operations and/or portions thereof and lines connecting the various blocks do not imply any particular order or dependency of the operations or portions thereof. Blocks represented by dashed lines indicate alternative operations and/or portions thereof. Dashed lines, if any, connecting the various blocks represent alternative dependencies of the operations or portions thereof. It will be understood that not all dependencies among the various disclosed operations are necessarily represented. FIGS. **27-29** and the accompanying disclosure describing the operations of the method(s) set forth herein should not be interpreted as necessarily determining a sequence in which the operations are to be performed. Rather, although one illustrative order is indicated,

it is to be understood that the sequence of the operations may be modified when appropriate. Accordingly, certain operations may be performed in a different order or simultaneously. Additionally, those skilled in the art will appreciate that not all operations described need be performed.

In the foregoing description, numerous specific details are set forth to provide a thorough understanding of the disclosed concepts, which may be practiced without some or all of these particulars. In other instances, details of known devices and/or processes have been omitted to avoid unnecessarily obscuring the disclosure. While some concepts will be described in conjunction with specific examples, it will be understood that these examples are not intended to be limiting.

Unless otherwise indicated, the terms "first," "second," etc. are used herein merely as labels, and are not intended to impose ordinal, positional, or hierarchical requirements on the items to which these terms refer. Moreover, reference to, e.g., a "second" item does not require or preclude the existence of, e.g., a "first" or lower-numbered item, and/or, e.g., a "third" or higher-numbered item.

Reference herein to "one example" means that one or more feature, structure, or characteristic described in connection with the example is included in at least one implementation. The phrase "one example" in various places in the specification may or may not be referring to the same example.

As used herein, a system, apparatus, structure, article, element, component, or hardware "configured to" perform a specified function is indeed capable of performing the specified function without any alteration, rather than merely having potential to perform the specified function after further modification. In other words, the system, apparatus, structure, article, element, component, or hardware "configured to" perform a specified function is specifically selected, created, implemented, utilized, programmed, and/or designed for the purpose of performing the specified function. As used herein, "configured to" denotes existing characteristics of a system, apparatus, structure, article, element, component, or hardware which enable the system, apparatus, structure, article, element, component, or hardware to perform the specified function without further modification. For purposes of this disclosure, a system, apparatus, structure, article, element, component, or hardware described as being "configured to" perform a particular function may additionally or alternatively be described as being "adapted to" and/or as being "operative to" perform that function.

Different examples of the apparatus(es) and method(s) disclosed herein include a variety of components, features, and functionalities. It should be understood that the various examples of the apparatus(es) and method(s) disclosed herein may include any of the components, features, and functionalities of any of the other examples of the apparatus(es) and method(s) disclosed herein in any combination, and all of such possibilities are intended to be within the scope of the present disclosure.

Many modifications of examples set forth herein will come to mind to one skilled in the art to which the present disclosure pertains having the benefit of the teachings presented in the foregoing descriptions and the associated drawings.

Therefore, it is to be understood that the present disclosure is not to be limited to the specific examples illustrated and that modifications and other examples are intended to be included within the scope of the appended claims. Moreover, although the foregoing description and the associated drawings describe examples of the present disclosure in the context of certain illustrative combinations of elements and/or functions, it should be appreciated that different combinations of elements and/or functions may be provided by alternative implementations without departing from the scope of the appended claims. Accordingly, parenthetical reference numerals in the appended claims, if any, are presented for illustrative purposes only and are not intended to limit the scope of the claimed subject matter to the specific examples provided in the present disclosure.

What is claimed is:

**1**. A landing gear comprising:

an outer cylinder rotatably coupled to a frame of an aircraft about a trunnion axis of rotation;

a shock strut assembly movably coupled to the outer cylinder so as to reciprocate along a longitudinal axis of the outer cylinder; and

a passive shrink mechanism including:

a first shrink link member pivotally coupled to the outer cylinder,

a second shrink link member coupling the first shrink link member to the shock strut assembly,

a crank member pivotally coupled to the outer cylinder,

a first connecting link coupling the crank member to a walking beam of a landing gear retract mechanism, and

a second connecting link coupling the crank member to the first shrink link member;

wherein the passive shrink mechanism is passively extended and shortened through actuation of the landing gear retract mechanism with deployment and retraction of the landing gear.

**2**. The landing gear of claim **1**, wherein:

the crank member pivots about a first axis of rotation; and

the first shrink link member pivots about a second axis of rotation that is spaced, along the longitudinal axis of the outer cylinder, from the first axis of rotation.

**3**. The landing gear of claim **1**, further comprising:

a shrink crank member coupled to the first shrink link member so that the shrink crank member and the first shrink link member rotate as a unit; and

wherein the second connecting link is coupled to the shrink crank member so as to drive rotation of the first shrink link member and effect extension and retraction of the shock strut assembly relative to the outer cylinder and along the longitudinal axis.

**4**. The landing gear of claim **3**, wherein the first shrink link member includes a first end rotatably coupled to the outer cylinder and a second end rotatably coupled to the second shrink link member, the shrink crank member being disposed adjacent the first end of the first shrink link member.

**5**. The landing gear of claim **3**, wherein the first shrink link member includes a crank member receiver configured to receive the shrink crank member so that the shrink crank member is rotationally fixed relative to the first shrink link member.

**6**. The landing gear of claim **1**, wherein:

the first shrink link member includes a first end rotatably coupled to the outer cylinder and a second end rotatably coupled to the second shrink link member; and

the second connecting link is pivotally coupled to the first shrink link member adjacent the second end so as to drive rotation of the first shrink link member and effect extension or retraction of the shock strut assembly relative to the outer cylinder and along the longitudinal axis.

7. The landing gear of claim 1, wherein the first shrink link member and the second shrink link member are rotatably coupled to each other so as to fold and unfold relative to each other and lock in an over-center position when unfolded.

8. An aircraft comprising:

a frame; and

a landing gear coupled to the frame, the landing gear including

an outer cylinder rotatably coupled to a frame of the aircraft about a trunnion axis of rotation;

a shock strut assembly movably coupled to the outer cylinder so as to reciprocate along a longitudinal axis of the outer cylinder; and

a passive shrink mechanism including

a first shrink link member pivotally coupled to the outer cylinder,

a second shrink link member coupling the first shrink link member to the shock strut assembly,

a crank member pivotally coupled to the outer cylinder,

a first connecting link coupling the crank member to a walking beam of a landing gear retract mechanism, and

a second connecting link coupling the crank member to the first shrink link member;

wherein the passive shrink mechanism is passively extended and shortened through actuation of the landing gear retract mechanism with deployment and retraction of the landing gear.

9. The aircraft of claim 8, further comprising:

a sensor actuator arm coupled to the first shrink link member so as to rotate with the first shrink link member; and

a sensor coupled to the outer cylinder;

wherein the sensor is configured to sense the sensor actuator arm upon extension of the shock strut assembly.

10. The aircraft of claim 8, wherein the outer cylinder includes a shrink link cavity and the first shrink link member and the second shrink link member are disposed within the shrink link cavity and are enclosed by the outer cylinder.

11. The aircraft of claim 10, wherein the outer cylinder includes a cover configured to enclose the first shrink link member and the second shrink link member within the shrink link cavity.

12. The aircraft of claim 10, wherein the shrink link cavity includes a fluid drainage aperture.

13. The aircraft of claim 8, further comprising:

a door pivotally coupled to the frame about a door pivot axis; and

a door drive member coupling the door to the outer cylinder so that rotation of the outer cylinder about the trunnion axis of rotation effects pivoting of the door about the door pivot axis.

14. The aircraft of claim 8, wherein the outer cylinder includes an inner cavity and the shock strut assembly comprises:

a bulkhead movably coupled to the inner cavity so as to form a first seal with the inner cavity, the bulkhead being coupled to the shrink mechanism; and

an inner cylinder movably coupled to both the inner cavity and the bulkhead so as to form a second seal with the inner cavity and so that the inner cylinder is movable with the bulkhead relative to the outer cylinder;

wherein the shrink mechanism effects relative movement of both the bulkhead and the inner cylinder so as to one of increase or decrease a length of the landing gear depending on a respective deployed or retracted configuration of the landing gear.

15. A method of operating a landing gear of an aircraft, the method comprising:

rotating the landing gear about a trunnion axis of rotation, where the trunnion axis of rotation is defined by an outer cylinder of the landing gear; and

moving a shock strut assembly relative to the outer cylinder with a passive shrink link mechanism, where the outer cylinder at least partially surrounds the shock strut assembly and the shrink link mechanism includes:

a first shrink link member pivotally coupled to the outer cylinder,

a second shrink link member coupling the first shrink link member to the shock strut assembly,

a crank member pivotally coupled to the outer cylinder,

a first connecting link coupling the crank member to a walking beam of a landing gear retract mechanism, and

a second connecting link coupling the crank member to the first shrink link member;

wherein the passive shrink mechanism is passively extended and shortened with the rotation of the landing gear about the trunnion axis of rotation.

16. The method of claim 15, further comprising:

pivoting the crank member about a first axis of rotation; and

pivoting the first shrink link member about a second axis of rotation that is spaced from the first axis of rotation along a longitudinal axis of the outer cylinder;

wherein the first axis of rotation and the second axis of rotation are substantially parallel with one another.

17. The method of claim 15, further comprising:

pivoting the crank member about a first axis of rotation; and

pivoting the first shrink link member about a second axis of rotation that is spaced from the first axis of rotation along a longitudinal axis of the outer cylinder;

wherein the first connecting link and the second connecting link extend substantially along the longitudinal axis adjacent one another.

18. The method of claim 15, further comprising:

pivoting the crank member about a first axis of rotation; and

pivoting the first shrink link member about a second axis of rotation that is spaced from the first axis of rotation along a longitudinal axis of the outer cylinder;

wherein the first axis of rotation and the second axis of rotation cross one another.

19. The method of claim 15, further comprising folding and unfolding of the second shrink link member relative to the first shrink link member with the second connecting link under impetus of the first connecting link.

20. The method of claim 15, wherein the outer cylinder includes an inner cavity and the method further comprises:

moving, with the shrink mechanism, both a bulkhead of the shock strut assembly and an inner cylinder of the shock strut assembly so as to increase or decrease a length of the landing gear depending on a respective deployed or retracted configuration of the landing gear; and

wherein:

the bulkhead is movably coupled to the inner cavity so as to form a first seal with the inner cavity, the bulkhead being coupled to the shrink mechanism; and

the inner cylinder is movably coupled to both the inner cavity and the bulkhead so as to form a second seal with the inner cavity and so that the inner cylinder is movable with the bulkhead relative to the outer cylinder.

* * * * *