US 20250277999A1

(19) United States
(12) Patent Application Publication
PIECUCH et al.
(10) Pub. No.: US 2025/0277999 A1
(43) Pub. Date: Sep. 4, 2025

(54) **SELECTIVE DRIVING OF A COMPOUND BACKLIGHT WITH EDGE LIGHTING**

(71) Applicant: **Microsoft Technology Licensing LLC**, Redmond, WA (US)

(72) Inventors: **Scott PIECUCH**, Seattle, WA (US); **Nobuyuki SUZUKI**, Kirkland, WA (US); **Ying ZHENG**, Sammamish, WA (US)

(21) Appl. No.: **19/085,816**

(22) Filed: **Mar. 20, 2025**

Related U.S. Application Data

(63) Continuation of application No. 18/516,288, filed on Nov. 21, 2023, now Pat. No. 12,306,494.

Publication Classification

(51) **Int. Cl.**

G02F 1/1335	(2006.01)
F21V 8/00	(2006.01)
G02F 1/13357	(2006.01)

(52) **U.S. Cl.**

CPC ***G02F 1/133555*** (2013.01); ***G02B 6/0031*** (2013.01); ***G02B 6/0036*** (2013.01); ***G02B 6/0068*** (2013.01); ***G02B 6/0091*** (2013.01); ***G02F 1/133603*** (2013.01); ***G02F 1/133607*** (2021.01); ***G02F 1/133615*** (2013.01); *G02F 2203/09* (2013.01)

(57) **ABSTRACT**

Display devices, display systems, backlight assemblies, and methods described herein provide compound backlights with edge lighting. In an aspect, the backlight includes a waveguide, first lights, and an array layer. The first lights are arranged along an edge of the waveguide. Each of the first lights transmits light into the waveguide. The array layer is coupled to the waveguide and comprises a reflective layer and second lights. The reflective layer reflects the light transmitted by the first lights into the waveguide. The second lights are arranged between the waveguide and the reflective layer. Each of the second lights transmits light into the waveguide layer through the first surface. In a further aspect, the second lights are oriented away from the waveguide and toward the reflective surface. In another aspect, a compound backlight includes a reflective surface, arranged between a waveguide and second lights, that reflects a portion of received light.

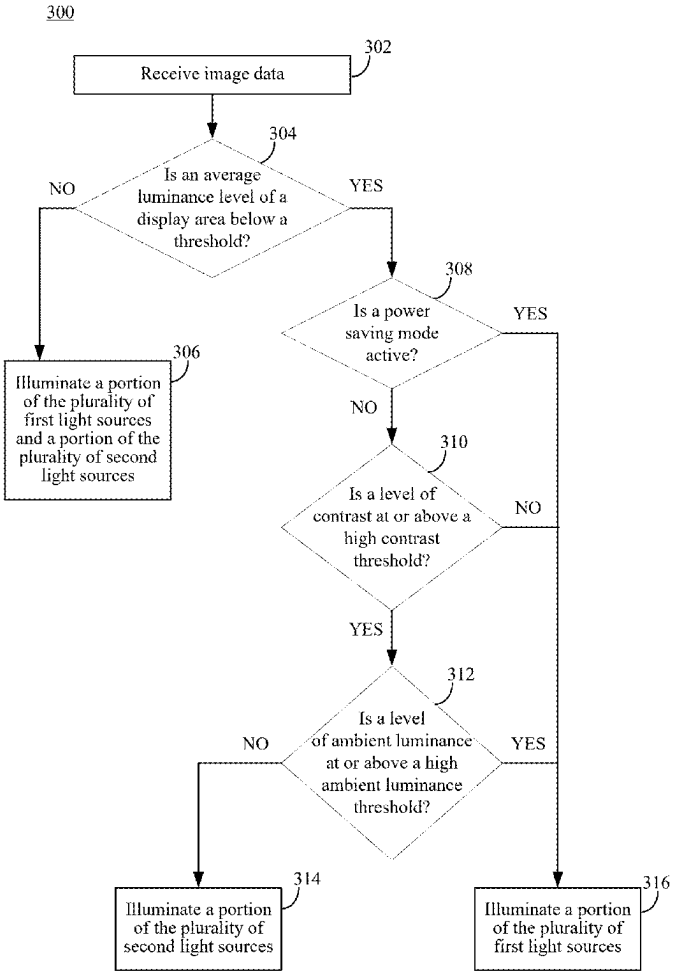

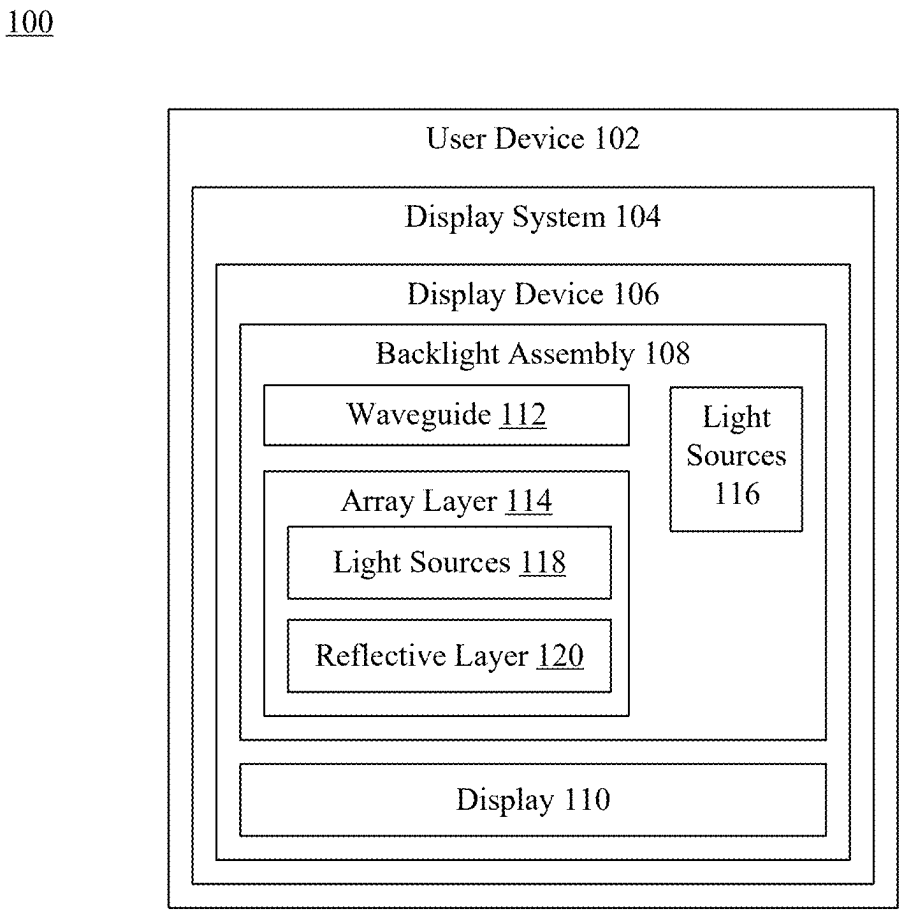
100
User Device 102
Display System 104
Display Device 106
Backlight Assembly 108
Waveguide 112
Light Sources 116
Array Layer 114
Light Sources 118
Reflective Layer 120
Display 110

FIG. 1

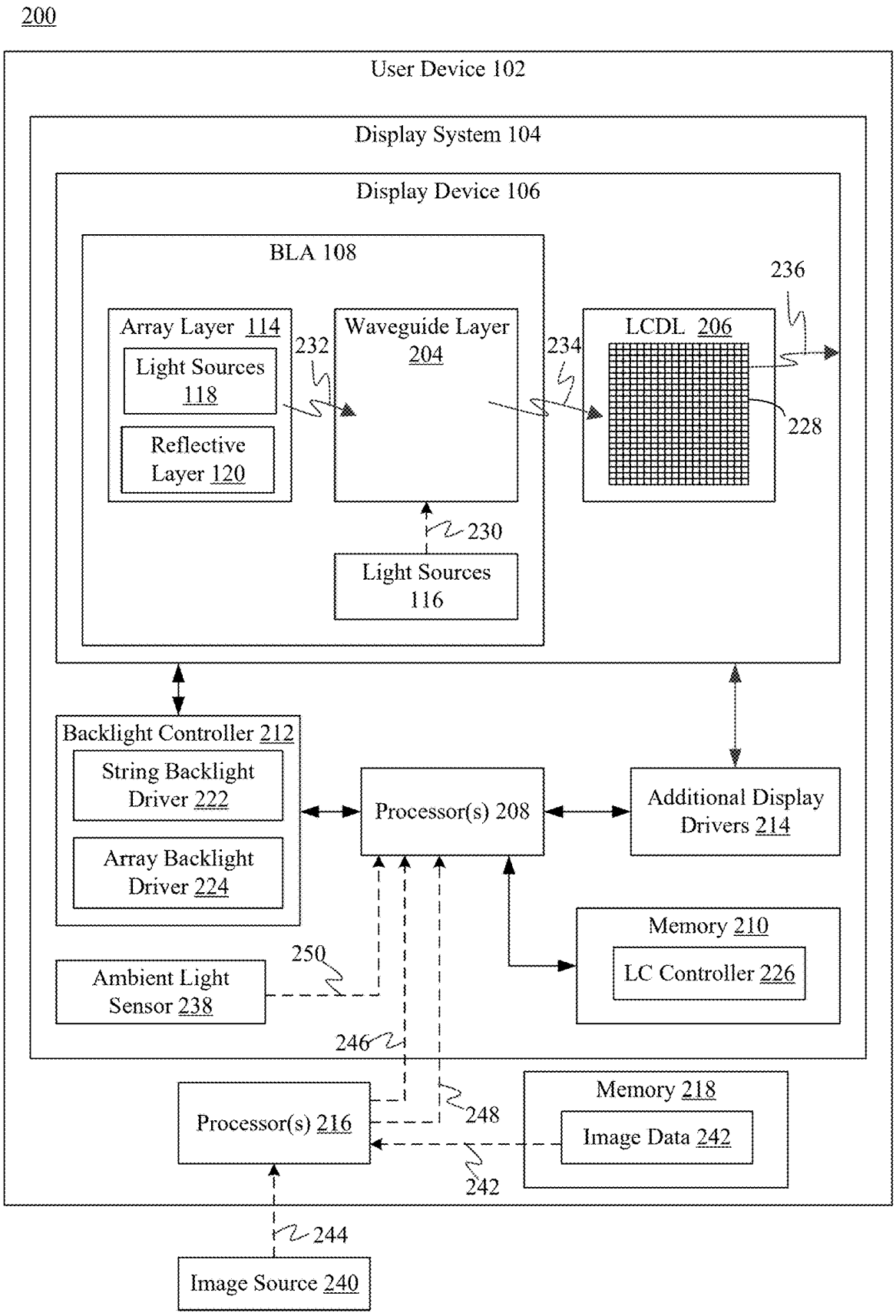
200
User Device 102
Display System 104
Display Device 106
BLA 108
Array Layer 114
Light Sources 118
Reflective Layer 120
232
Waveguide Layer 204
234
LCDL 206
236
228
230
Light Sources 116
Backlight Controller 212
String Backlight Driver 222
Array Backlight Driver 224
Processor(s) 208
Additional Display Drivers 214
Memory 210
LC Controller 226
250
Ambient Light Sensor 238
246
Processor(s) 216
248
Memory 218
Image Data 242
242
244
Image Source 240

FIG. 2

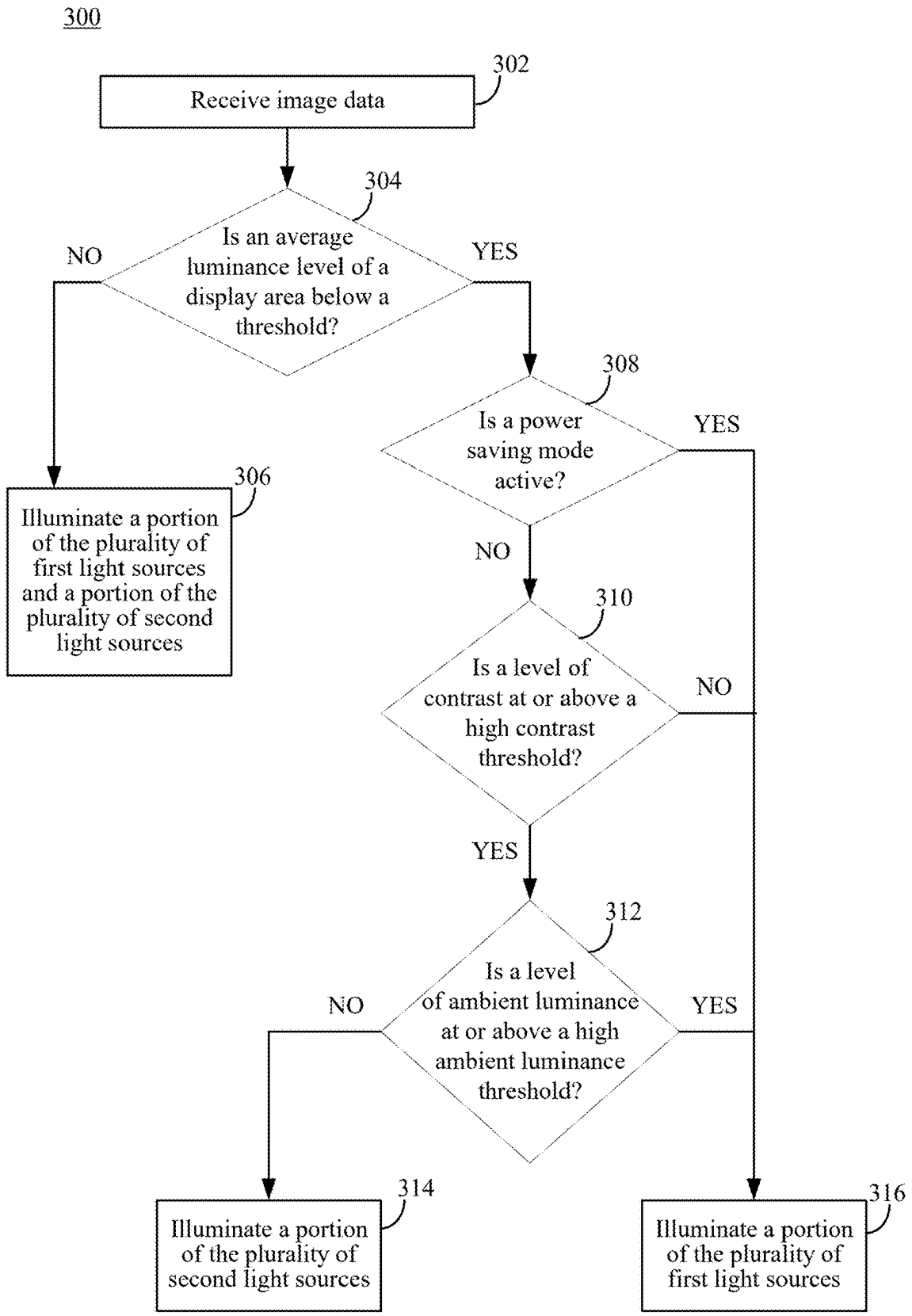
300
302
Receive image data
304
Is an average luminance level of a display area below a threshold?
NO
YES
306
Illuminate a portion of the plurality of first light sources and a portion of the plurality of second light sources
308
Is a power saving mode active?
YES
NO
310
Is a level of contrast at or above a high contrast threshold?
NO
YES
312
Is a level of ambient luminance at or above a high ambient luminance threshold?
NO
YES
314
Illuminate a portion of the plurality of second light sources
316
Illuminate a portion of the plurality of first light sources

FIG. 3

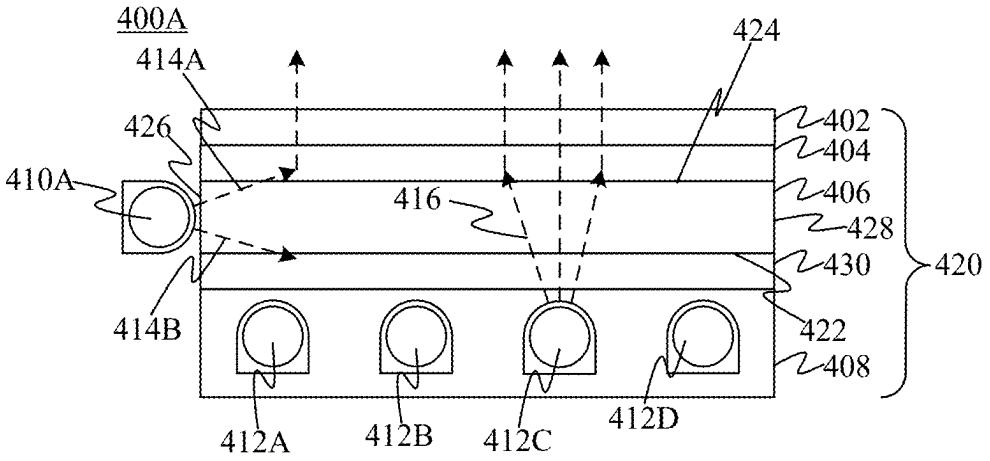
400A
414A
424
426
402
404
410A
406
416
428
420
430
414B
422
408
412A
412B
412C
412D

FIG. 4A

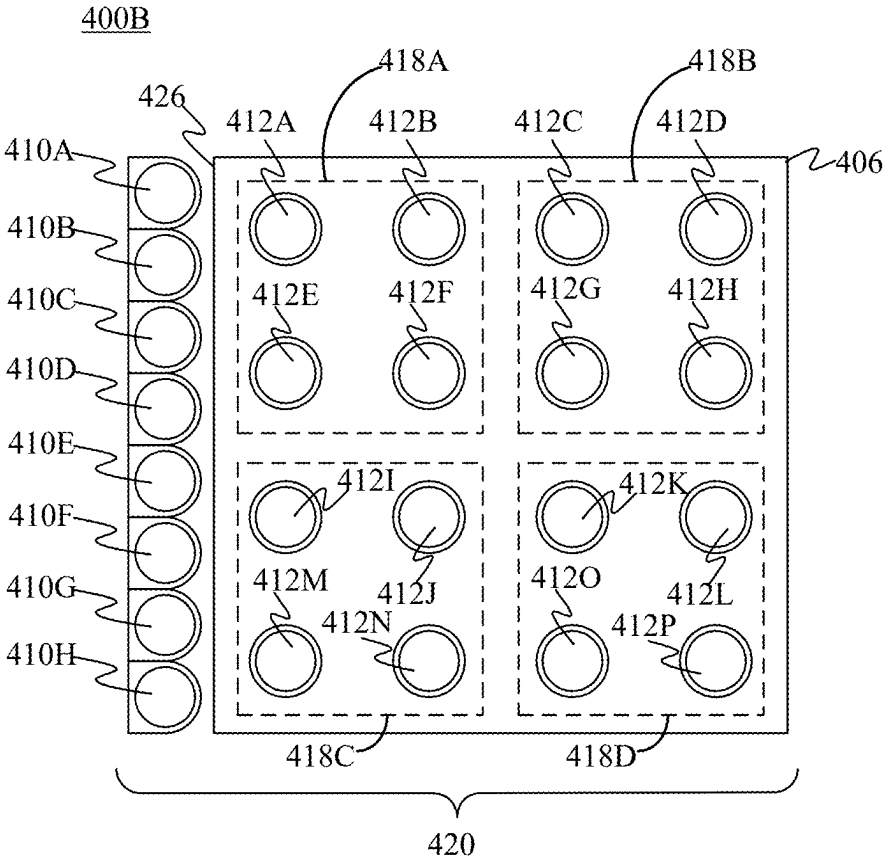
400B
418A
418B
426
412A
412B
412C
412D
410A
406
410B
412E
412F
412G
412H
410C
410D
410E
412I
412K
410F
412M
412J
412O
412L
410G
412N
412P
410H
418C
418D
420

FIG. 4B

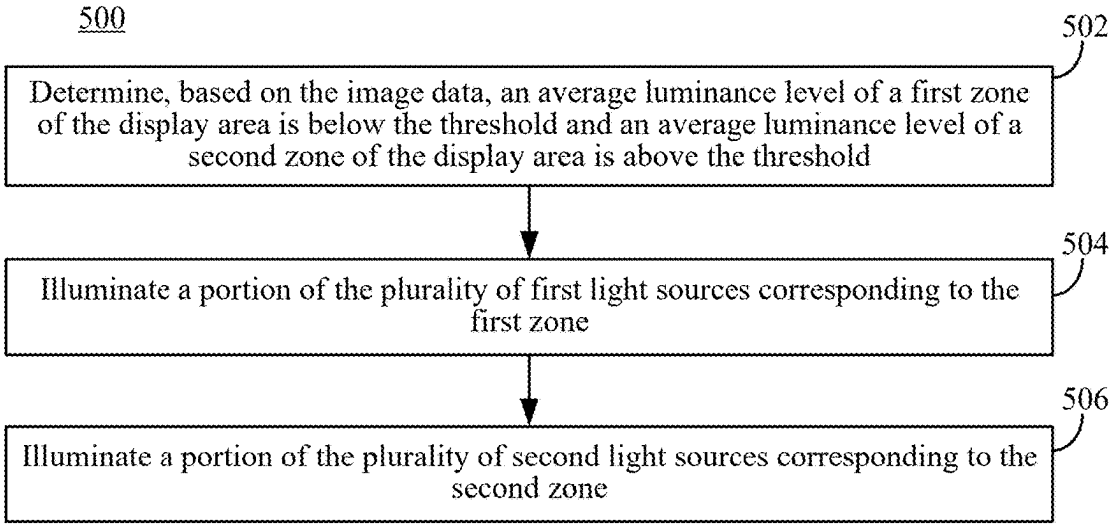
500
502
Determine, based on the image data, an average luminance level of a first zone of the display area is below the threshold and an average luminance level of a second zone of the display area is above the threshold
504
Illuminate a portion of the plurality of first light sources corresponding to the first zone
506
Illuminate a portion of the plurality of second light sources corresponding to the second zone

FIG. 5

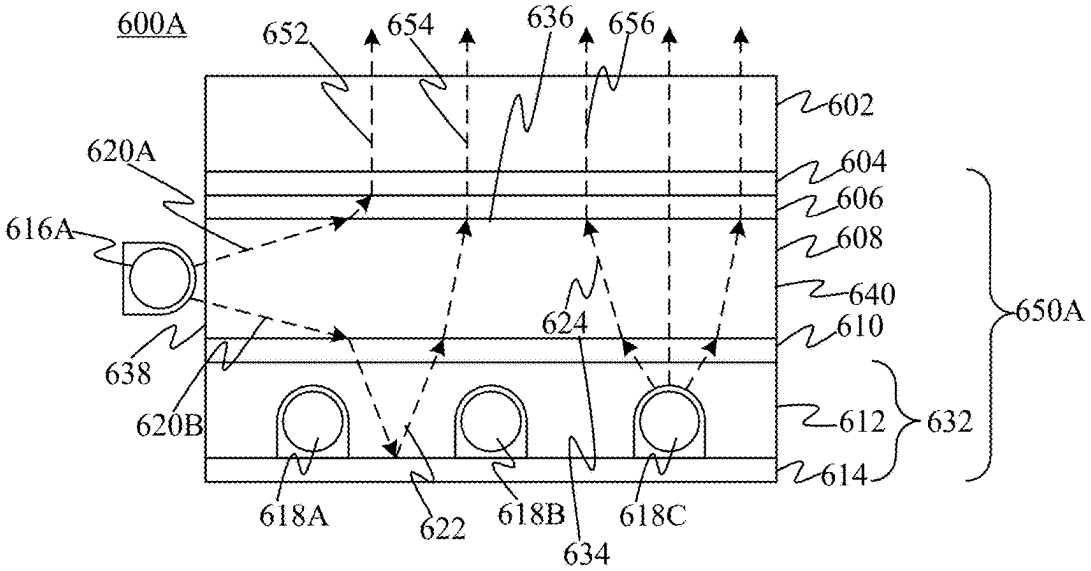
600A
652
654
636
656
602
620A
604
606
616A
608
640
624
610
650A
638
620B
612
632
614
618A
622
618B
618C
634

FIG. 6A

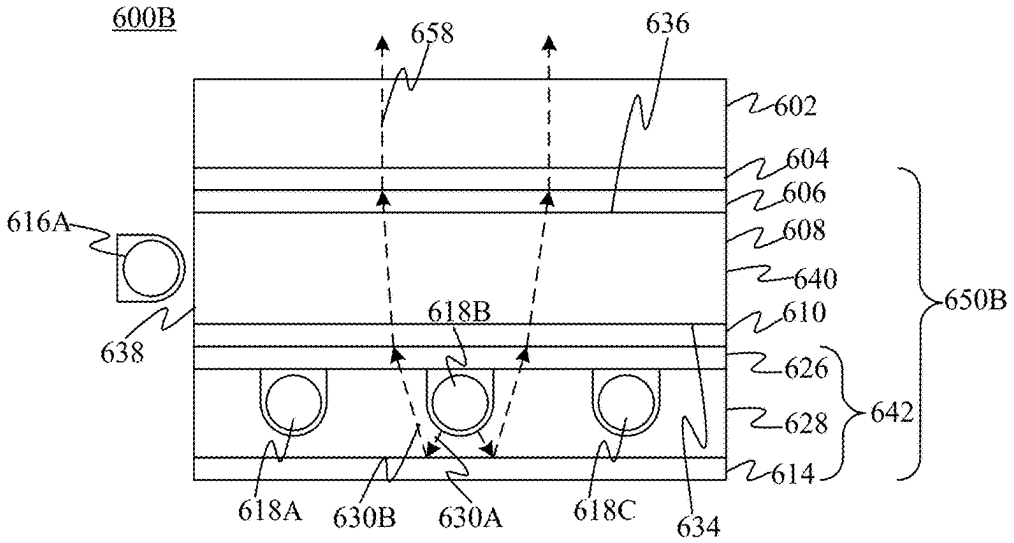
600B
658
636
602
604
606
608
640
610
626
628
614
650B
642
616A
638
618B
618A
630B
630A
618C
634

FIG. 6B

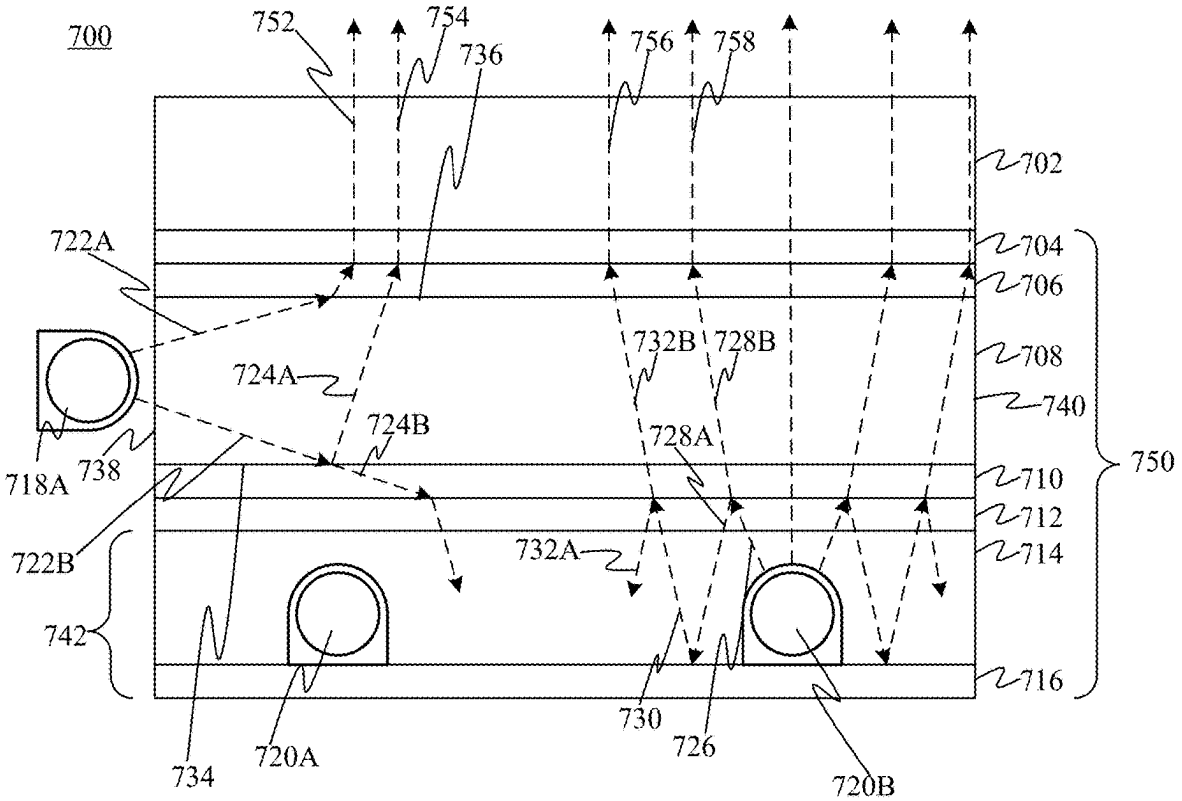
700
752
754
736
756
758
702
704
706
708
740
710
712
714
716
750
722A
724A
724B
732B
728B
728A
732A
718A
738
722B
742
734
720A
730
726
720B

FIG. 7

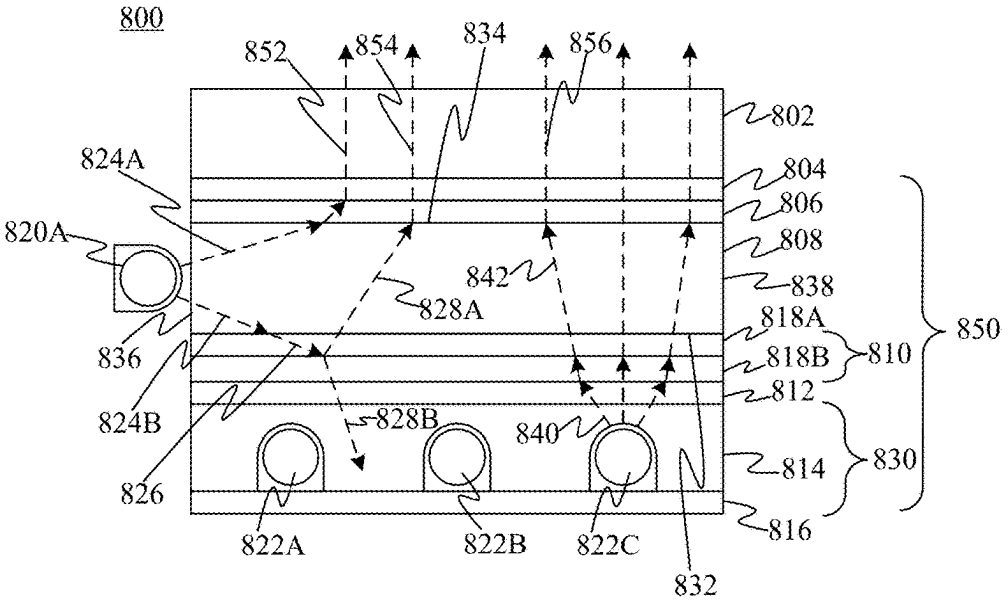
800
852
854
834
856
802
824A
804
806
820A
808
842
838
828A
818A
850
836
818B
810
824B
812
828B
840
814
830
826
816
822A
822B
822C
832

FIG. 8

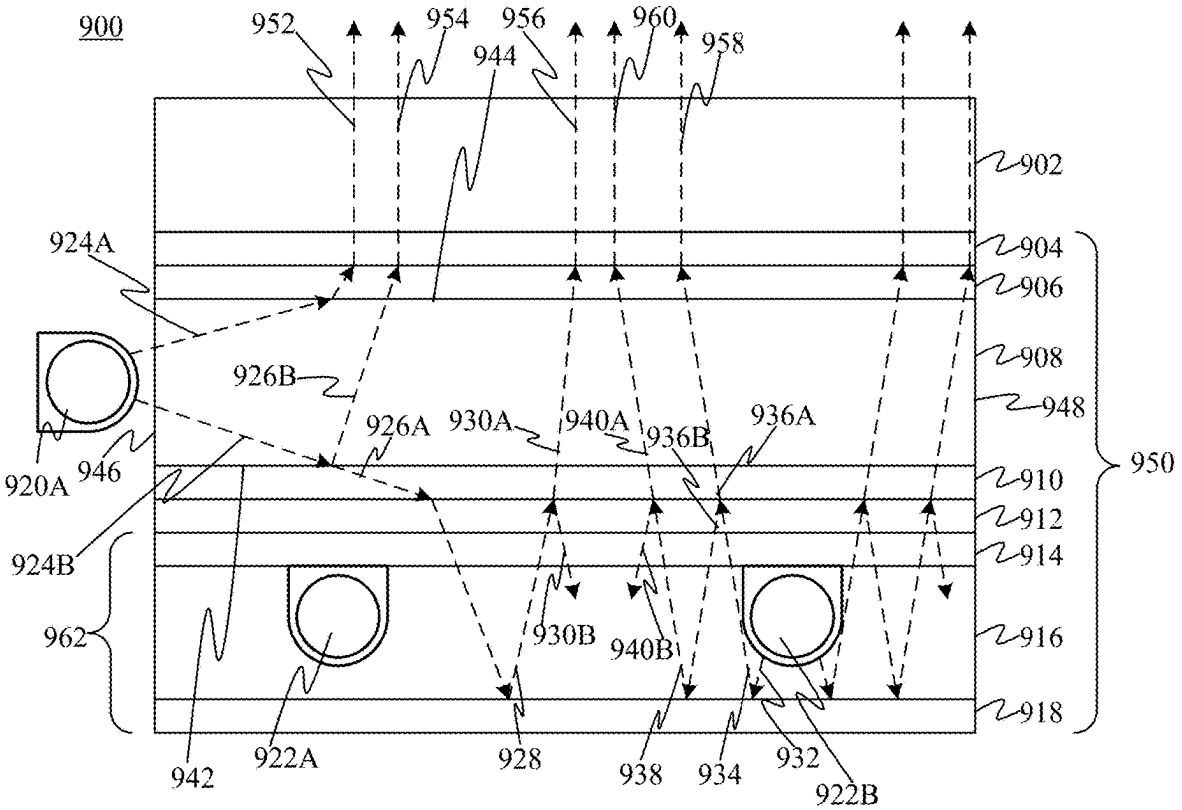
900
952
954
956
960
958
944
902
924A
904
906
908
926B
948
926A
930A
940A
936B
936A
920A
946
910
950
912
924B
914
962
930B
940B
916
918
942
922A
928
938
934
932
922B

FIG. 9

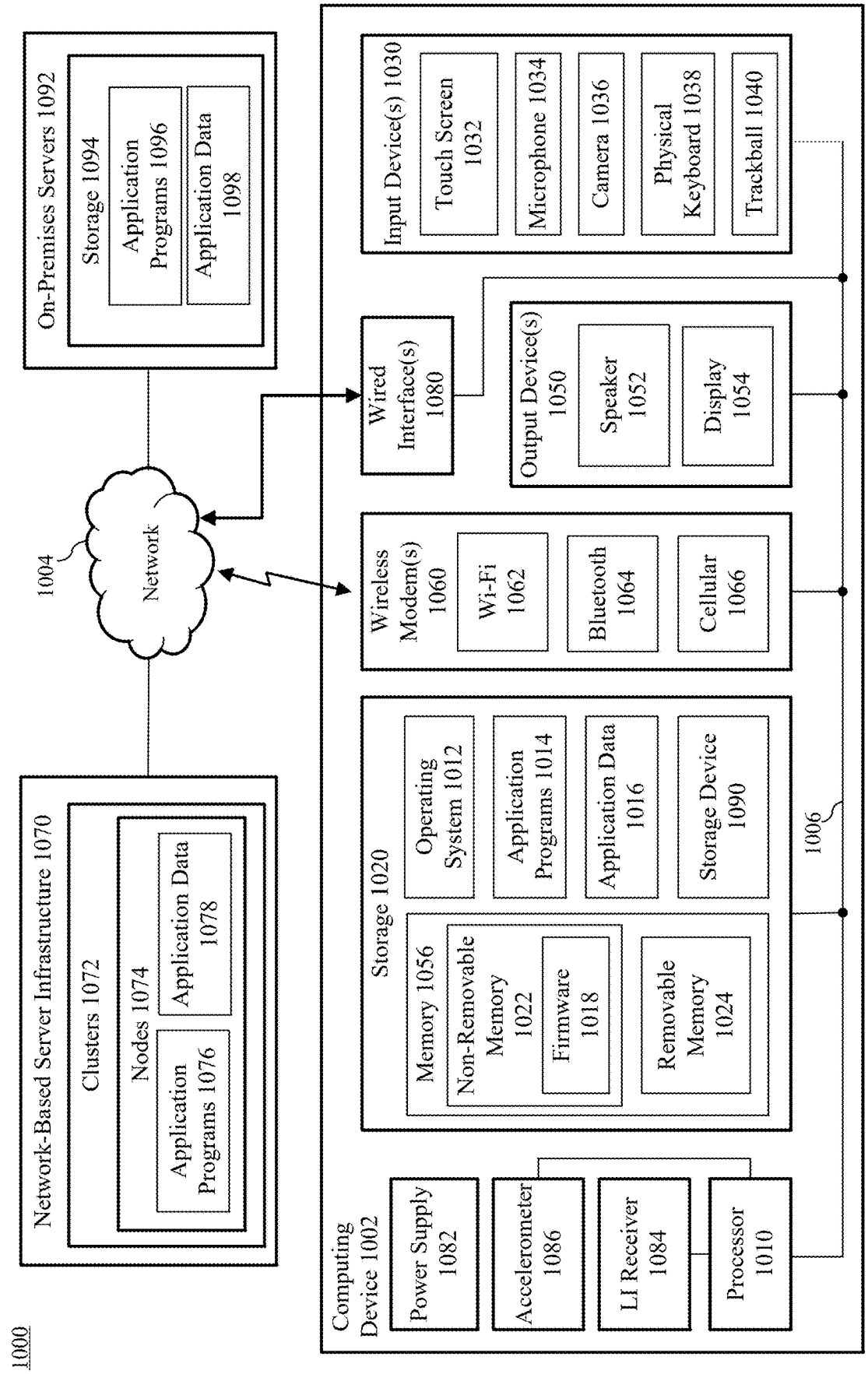
1000
Network-Based Server Infrastructure 1070
Clusters 1072
Nodes 1074
Application Programs 1076
Application Data 1078
1004
Network
On-Premises Servers 1092
Storage 1094
Application Programs 1096
Application Data 1098
Computing Device 1002
Power Supply 1082
Accelerometer 1086
LI Receiver 1084
Processor 1010
Storage 1020
Memory 1056
Non-Removable Memory 1022
Firmware 1018
Removable Memory 1024
Operating System 1012
Application Programs 1014
Application Data 1016
Storage Device 1090
1006
Wireless Modem(s) 1060
Wi-Fi 1062
Bluetooth 1064
Cellular 1066
Wired Interface(s) 1080
Output Device(s) 1050
Speaker 1052
Display 1054
Input Device(s) 1030
Touch Screen 1032
Microphone 1034
Camera 1036
Physical Keyboard 1038
Trackball 1040

FIG. 10

SELECTIVE DRIVING OF A COMPOUND BACKLIGHT WITH EDGE LIGHTING

CROSS-REFERENCE TO RELATED APPLICATIONS

[0001] This application is a Continuation of, and claims priority to, U.S. patent application Ser. No. 18/516,288, filed on Nov. 21, 2023, entitled "COMPOUND BACKLIGHT WITH EDGE LIGHTING," the entirety of which is incorporated by reference herein.

BACKGROUND

[0002] A backlight is a form of illumination used in liquid crystal displays (LCDs). Because an LCD does not produce its own light, another light source, the "backlight," illuminates the LCD so that a visible image is produced. LCDs with backlights are used in many electronic user devices, such as flat panel displays, LCD televisions, mobile devices such as cell phones, etc.

[0003] Some LCDs use a backlight that gives off a uniform light over its surface, such as an electroluminescent panel (ELP). Other LCDs use multiple light sources to enable localized dimming, such as light emitting diodes (LEDs), or cold or hot cathode fluorescent lamps (CCFLs or HCFLs). Some LCDs with localized dimming utilize miniLED arrays driven by multiple LED drivers.

SUMMARY

[0004] This Summary is provided to introduce a selection of concepts in a simplified form that are further described below in the Detailed Description. This Summary is not intended to identify key features or essential features of the claimed subject matter, nor is it intended to be used to limit the scope of the claimed subject matter.

[0005] Embodiments are described herein for a compound backlight with edge lighting. In an aspect, the backlight includes a transparent waveguide layer, a plurality of first light sources, and an array layer. The transparent waveguide layer has a first surface. The plurality of first light sources is arranged along an edge of the transparent waveguide layer. Each of the first light sources is configured to transmit light into the waveguide layer through the edge. The array layer is coupled to the first surface of the transparent waveguide layer and comprises a first reflective layer and a plurality of second light sources. The first reflective layer is configured to reflect the light transmitted by the plurality of first light sources into the waveguide layer through the first surface. The plurality of second light sources is arranged between the first surface and the reflective layer. Each of the second light sources is configured to transmit light into the waveguide layer through the first surface.

[0006] In a further aspect, the plurality of second light sources is mounted to a transparent sublayer. The plurality of second light sources is oriented toward the reflective layer and away from the first surface. To transmit light into the waveguide layer, the plurality of second light sources is configured to transmit light toward the reflective layer to cause the reflective layer to reflect the light transmitted by the plurality of second light sources into the waveguide layer through the first surface.

[0007] In another aspect, the backlight includes a transparent waveguide layer, a plurality of first light sources, an array layer, and a first reflective layer. The transparent waveguide layer has a first surface. The plurality of first light sources is arranged along an edge of the transparent waveguide layer. Each of the first light sources is configured to transmit light into the waveguide layer through the edge. The array layer comprises a first reflective layer and a plurality of second light sources. Each of the second light sources is configured to transmit light into the waveguide layer through the first surface. The first reflective layer is arranged between the first surface of the transparent waveguide layer and the array layer. The first reflective layer is configured to reflect a portion of the light transmitted by the plurality of first light sources into the waveguide layer through the first surface.

[0008] In a further aspect of the another aspect, the first reflective layer is configured to reflect a portion of the light transmitted by the plurality of second light sources away from the first surface.

[0009] In a further aspect of the another aspect, the first reflective layer comprises a color conversion sublayer and a color reflective sublayer. The color conversion sublayer is configured to convert the light transmitted by the plurality of second light sources from a first color to a second color. The color reflective sublayer is configured to reflect the portion of the light transmitted by the plurality of first light sources into the waveguide layer through the first surface.

[0010] In another aspect, a display device comprises a display layer, a backlight assembly, and a backlight controller. The backlight assembly comprises any of the backlights described herein. The display layer is disposed proximate to the backlight assembly and is configured to selectively filter the light emitted from the backlight assembly. The backlight controller is configured to receive image data and determine, based on the image data, an average luminance level of a display area of the display layer is below a threshold. Responsive to the determination, the backlight controller is configured to illuminate a portion of the plurality of first light sources.

[0011] In a further aspect of the display device, responsive to the determination, the backlight controller is configured to maintain the plurality of second light sources in an off state.

[0012] In a further aspect of the display device, the backlight controller is configured to determine, based on the image data, an average luminance level of a first zone of the display area is below the threshold and an average luminance level of a second zone of the display area is above the threshold. The backlight controller is configured to illuminate a portion of the plurality of second light sources corresponding to the second zone and illuminate a portion of the plurality of first light sources corresponding to the first zone.

BRIEF DESCRIPTION OF THE DRAWINGS/FIGURES

[0013] The accompanying drawings, which are incorporated herein and form a part of the specification, illustrate embodiments and, together with the description, further serve to explain the principles of the embodiments and to enable a person skilled in the pertinent art to make and use the embodiments.

[0014] FIG. **1** shows a block diagram of a user device that includes a compound backlight with edge lighting, according to an example embodiment.

[0015] FIG. **2** shows a block diagram of a system that includes a user device with a compound backlight, according to an example embodiment.

[0016] FIG. **3** shows a flowchart of a process for illuminating a portion of light sources of a compound backlight, according to an example embodiment.

[0017] FIG. **4**A shows a cross-sectional side view of a backlight assembly that includes edge light sources and array light sources, according to an example embodiment.

[0018] FIG. **4**B shows a top view of the backlight assembly of FIG. **4**A, according to an example embodiment.

[0019] FIG. **5** shows a flowchart of a process for illuminating a portion of light sources of a compound backlight, according to an example embodiment.

[0020] FIG. **6**A shows a cross-sectional view of a display layer and a backlight assembly that includes edge light sources and array light sources, according to an example embodiment.

[0021] FIG. **6**B shows a cross-sectional view of a display layer and a backlight assembly that includes edge light sources and array light sources, according to another example embodiment.

[0022] FIG. **7** shows a cross-sectional view of a display layer and a backlight assembly that includes edge light sources and array light sources, according to another example embodiment.

[0023] FIG. **8** shows a cross-sectional view of a display layer and a backlight assembly that includes edge light sources and array light sources, according to another example embodiment.

[0024] FIG. **9** shows a cross-sectional view of a display layer and a backlight assembly that includes edge light sources and array light sources, according to another example embodiment.

[0025] FIG. **10** shows a block diagram of an example computing system in which embodiments may be implemented.

[0026] The subject matter of the present application will now be described with reference to the accompanying drawings. In the drawings, like reference numbers indicate identical or functionally similar elements. Additionally, the left-most digit(s) of a reference number identifies the drawing in which the reference number first appears.

DETAILED DESCRIPTION

I. Introduction

[0027] The following detailed description discloses numerous example embodiments. The scope of the present patent application is not limited to the disclosed embodiments, but also encompasses combinations of the disclosed embodiments, as well as modifications to the disclosed embodiments. It is noted that any section/subsection headings provided herein are not intended to be limiting. Embodiments are described throughout this document, and any type of embodiment may be included under any section/subsection. Furthermore, embodiments disclosed in any section/subsection may be combined with any other embodiments described in the same section/subsection and/or a different section/subsection in any manner.

II. Embodiments for Compound Backlights with Edge Lighting

[0028] A backlight is a form of illumination used in liquid crystal displays (LCDs). Because an LCD does not produce its own light, another light source, the "backlight," illuminates the LCD so that a visible image is produced. LCDs with backlights are used in many electronic user devices, such as flat panel displays, LCD televisions, mobile devices such as cell phones, etc.

[0029] Some LCDs use a backlight that gives off a uniform light over its surface, while others use multiple light sources to enable localized dimming. For instance, some LCDs with localized dimming utilize miniLED arrays driven by LED drivers. A backlight controller may selectively illuminate LEDs of the miniLED array to achieve a high contrast ratio between illuminated and non-illuminated portions of a display area. To individually control LEDs or groups of the LEDs, some implementations utilize dedicated hardware for each LED. However, this requires a large amount of space and cost for the components to control the LEDs. Other implementations utilize multiple scanning backlight drivers that control respective portions of the LED array. The use of such scanning backlight drivers increases the power consumed by the LCD system.

[0030] Embodiments of the present disclosure provide a compound backlight that includes a light source array and edge-aligned light sources (also referred to as "edge lights). The light source array is arranged beneath a waveguide layer of the compound backlight and the edge lights are arranged along an edge (or multiple edges) of the waveguide layer. Light sources of the light source array and/or edge lights may be LEDs or other types of light emitters. By including both a light source array and edge lights, drivers of portions of the light source array can be selectively disabled and edge lights may be illuminated to reduce power consumed by the backlight.

[0031] In some implementations of backlights utilizing edge lights, a portion of light emitted by the edge lights is lost. For instance, some of the light projected by an LED edge light would be directed toward the back of the backlight (i.e., toward the array) instead of toward the display panel. To compensate for this loss, the amount of light emitted by the edge lights may be increased; however, this increases power consumed by the edge lights. Embodiments of the present disclosure further provide various compound backlight assemblies that include one or more reflective layers positioned to reflect (e.g., at least a portion of) light emitted by the edge lights toward the display panel. Such embodiments have various advantages, including one or more of: 1) increased lighting output; 2) thinner backlight assemblies; 3) reduced number of light sources in a light source array; and/or 4) improved uniformity of the light source array. Each of these benefits is described briefly below, as well as elsewhere herein.

[0032] Increased Lighting Output—As noted herein, some of the light emitted by an edge

[0033] light is directed away from the display panel of an LCD. Embodiments of the present disclosure include a reflective layer that reflects this portion of emitted light toward the display panel. In this manner, "lost" light is redirected out of the backlight, thereby increasing the light output by the backlight when utilizing edge lights.

[0034] Thinner Backlight Assembly—Implementations of backlights with light source arrays may utilize films or

sheets of materials (e.g., "pyramid sheets") to scatter light emitted by the light sources of the array. By scattering the light, the light emitted by the backlight or a portion of the backlight is uniform (or near uniform). The thickness of the backlight assembly increases as the number of pyramid sheets increases. In some embodiments described herein, backlights utilizing a reflective layer require fewer pyramid sheets in order to sufficiently scatter light emitted by light sources of the array; therefore, the overall thickness of the backlight is reduced.

[0035] Reduced Number of Light Sources in a Light Source Array—Light sources can be expensive. In some embodiments described herein, a reflective layer recirculates light emitted by the light source array (e.g., through pyramid sheets). This results in further spread (or scatter) of light emitted by a single light source within the array. Therefore, the array is able to illuminate the LCD display panel with fewer light sources.

[0036] Improved Uniformity in a Light Source Array—Light emitted from a light source in an array may form a "hot spot" in a display area directly above the light source. In some embodiments, light sources of the array are positioned in a manner that reduces or eliminates the presence of the hot spots, thereby improving the uniformity of the backlight when illuminating the light source array (or a portion of the light source array).

[0037] Backlights that include a light source array and edge-aligned light sources may be configured in various ways in embodiments. For instance, FIG. **1** shows a block diagram of a user device **102** that includes a compound backlight with edge lighting, according to an example embodiment. As shown in FIG. **1**, user device **102** includes a display system **104**, which includes a display device **106**. Display device **106** includes a backlight assembly **108** and a display **110** (also referred to as a "display panel"). In accordance with an embodiment, display **110** is a liquid crystal display (LCD). Backlight assembly **108** comprises a waveguide **112** (e.g., a light guide plate), an array layer **114**, and a plurality of light sources **116**. Array layer **114** comprises a plurality of light sources **118** and a reflective layer **120**. User device **102** is described as follows.

[0038] User device **102** may be any type of stationary or mobile electronic device that includes a display (touch sensitive or not touch sensitive), including, but not limited to, a desktop computer, a server, a mobile or handheld device (e.g., a tablet, a personal data assistant (PDA), a cell phone, a smart phone, a laptop, a netbook, etc.), a wearable computing device (e.g., a smart watch, a head-mounted device (e.g., smart glasses, a virtual reality headset, etc.), a display in an automobile (e.g., a dashboard, a navigation panel, an infotainment panel, etc.), a portable media player, a stationary or handheld gaming console, a personal navigation assistant, a camera, a television, an Internet-of-Things (IoT) device, or other type of electronic device.

[0039] Display system **104** is configured to enable the display of content by user device **102** on display device **106**. In addition to display device **106**, display system **104** includes any additional hardware and software and/or firmware used to enable display system **104** to display content. For example, display system **104** may include a graphics subsystem, one or more processors, and/or one or more memories (physical hardware) not shown in FIG. **1** for illustrative brevity.

[0040] Display device **106** displays visible content to users. In particular, backlight assembly **108** generates light (e.g., white light) that passes through, and is filtered by display **110** to impart color to the light. The colored light is emitted from display device **106** as content to be viewed by users. Backlight assembly **108** generates light using light sources **116**, light sources **118**, and/or a combination of light sources **116** and light sources **118**. Light sources **116** (also referred to as "edge lights **116**") line one or more edges of waveguide **112**. Light sources **118** (also referred to as "array lights **118**") are arranged beneath a surface of waveguide **112**. Waveguide **112** is configured to guide transversal (or near transversal) light (e.g., light emitted by light sources **118**) and to spread and guide orthogonal (or near orthogonal) light (e.g., light transmitted by light sources **118**). For instance, light from light sources **116** enters into the one or more edges of waveguide **112** and is released to be filtered by display **110**. Light from light sources **118** enters into waveguide **112** through the surface, is spread or otherwise distributed, and is released to be filtered by display **110**.

[0041] As discussed above, some of the light emitted by light sources **116** is directed toward the back of backlight assembly **108** or otherwise away from display **110**. Reflective layer **120** is configured to reflect at least a portion of the light emitted away from display **110** toward display **110**. Reflective layer **120** may be a specular reflective surface (e.g., a mirror surface), a diffused reflective surface (e.g., a white diffusion reflective surface), or another type of reflective surface. In embodiments wherein reflective layer **120** is a specular reflective surface, the efficiency in which light is reflected by reflective layer **120** is increased. In embodiments wherein reflective layer **120** is a diffused reflective surface, the manufacturing cost of backlight assembly **108** may be reduced and light reflected by reflective layer **120** is dispersed in a uniform manner. In accordance with an embodiment, reflective layer **120** is arranged beneath light sources **118** (e.g., as described with respect to FIGS. **6**A, **6**B, and **9**, as well as elsewhere herein). In accordance with another embodiment, reflective layer **120** is arranged between light sources **118** and waveguide **112** (e.g., as described with respect to FIGS. **7**, **8**, and **9**, as well as elsewhere herein). In some embodiments, and as described with respect to FIG. **9** (as well as elsewhere herein), array layer **114** and/or backlight assembly **108** include multiple reflective layers. While reflective layer **120** is shown in FIG. **1** as a sub-layer of array layer **114**, it is also contemplated herein that reflective layer **120** may be a separate layer from array layer **114**.

[0042] User device **102**, display system **104**, and display device **106** may be configured in various ways to perform their functions. For instance, FIG. **2** shows a block diagram of a system **200** that includes a user device with a compound backlight, according to an example embodiment. As shown in FIG. **2**, system **200** comprises user device **102** of FIG. **1** and an image source **240**. As also shown in FIG. **2**, user device **102** includes display system **104** (as described with respect to FIG. **1**), one or more processors **216** ("processor **216**" herein), and one or more memories **218** ("memory **218**" herein). Memory **218** stores image data **242**. Display system **104** includes display device **106** (as described with respect to FIG. **1**), one or more processors **208** ("processor **208**" herein), one or more memories **210** ("memory **210**" herein), a backlight controller **212**, one or more additional display drivers **214** ("display drivers **214**" herein), and an

ambient light sensor **238**. Memory **210** stores LC controller **226**. System **200** of FIG. **2** is described in further detail as follows.

[0043] Display system **104** is communicatively coupled to processor **216** and memory **218** to support the display of video or other images. For example, processor **216** may provide image data **246** indicative of each image frame of the video/images to display system **104**. Image data **246** may be generated by processor **216**, another component of user device **102**, and/or obtained by processor **216**. For instance, as shown in FIG. **2**, processor **216** receives image data **242** from memory **218**. In accordance with an embodiment, processor **216** provides image data **242** to display system **104** as image data **246**. As also shown in FIG. **2**, processor **216** receives image data **244** from image source **240** (e.g., via a communication interface of user device **102**, not shown in FIG. **2** for brevity). In accordance with an embodiment, processor **216** provides image data **244** to display system **104** as image data **246**. Examples of processor **216** include, but are not limited to, a central processing unit, a graphics-processing unit, and/or another processor or processing unit.

[0044] As noted above, processor **216** may receive image data **244** from image source **240**. Image source **240** is a device and/or service executing on a device communicatively coupled to user device **102** over a network (e.g., one or more local area networks (LANs), wide area networks (WANs), enterprise networks, the Internet, internal networks, etc.). The network may include one or more wired and/or wireless portions. Examples of image source **240** include, but are not limited to, an electronic device that provides content to user device **102** (e.g., a streaming media player, a computing device, a DVD player, a Blu-Ray player, etc.), a streaming service hosted on a server, image and/or video data stored in memory external to user device **102** (e.g., of a storage server, of an external storage device, of another computing device, etc.), and/or any other electronic device and/or service executing on an electronic device suitable for providing image and/or video data to user device **102**.

[0045] Processor **208** may be a CPU, a GPU, and/or any other type of processor or processing unit configured for graphics-or display-related functionality. Some of the components of display system **104** may be integrated. For example, processor **208**, memory **210**, backlight controller **212**, and/or display drivers **214** may be integrated as a system-on-a chip (SoC) or application-specific integrated circuit (ASIC). Display system **104** may include additional, fewer, or alternative components than those shown in FIG. **2**. For example, display system **104** in accordance with an embodiment may not include a dedicated processor, and instead rely on processor **216**. In accordance with another embodiment, display system **104** does not include memory **210**, and instead uses memory **218** to support display-related processing. In embodiments, instructions implemented by, and data generated or used by, processor **208** are stored in memory **210**, memory **218**, or a combination of memory **210** and memory **218**.

[0046] Display device **106** comprises backlight assembly **108** (as described with respect to FIG. **1**) and LC display layer **206**. LC display layer **206** is an example of display **110** of FIG. **1**. LC display layer **206** includes an array **228** of pixels. As shown in FIG. **2**, backlight assembly **108** comprises array layer **114** (comprising light sources **118** and reflective layer **120**) and light sources **116**, as described with respect to FIG. **1**, and a waveguide layer **204**. Waveguide layer **204** is an example of waveguide **112** of FIG. **1**.

[0047] As described above (and elsewhere herein), light sources **116** are arranged along one or more edges of waveguide layer **204** and light sources **118** are arranged beneath waveguide layer **204** (e.g., between waveguide layer **204** and reflective layer **120** or between waveguide layer **204** and a supportive structure of backlight assembly **108**). Light sources **116** and light sources **118** may be organic LED (OLED) devices, another type of LED, or another type of light source disposed along a display edge.

[0048] Light sources **116** are arranged in a column or row and are configured to transmit light **230** into waveguide layer **204** through the edge (or edges) they are arranged along. Each light source of light sources **116** is adjacent to a portion of waveguide layer **204** that corresponds to a row of a display area of display device **106**. Each row includes a plurality of zones in series. Each row has at least one light source of light sources **116**. In some cases, each row has multiple light sources. The option to include multiple light sources may provide flexibility in configuring the zone arrangement. Having multiple devices per zone may also provide redundancy and/or allow each constituent light source to share the average luminance level burden and, thus, be driven at a lower intensity. Operation at lower intensities may help avoid performance decay arising from overdriving the devices. In one example, the light sources are distributed in a column at **30** devices per inch, while backlight assembly **108** has only 10 rows per inch. Other device and zone/row resolutions may be used. Additional details regarding zones are described with respect to FIGS. **4**B and **5**, as well as elsewhere herein.

[0049] Light sources **118** are arranged in a matrix or array and are configured to transmit light **232** into waveguide layer **204** through a surface of waveguide layer **204**. Each light source of light sources **118** is adjacent to apportion of waveguide layer **204** that corresponds to a zone of the display area of display device **106**. Each zone of the display area is associated with at least one light source of light sources **118**. In some cases, each zone has multiple light sources, which (in a similar manner as described with respect to light sources **116**) provides flexibility in configuration of zones. In one example, light sources are distributed as two-by-two matrices to respective zones. Other device and zone/light source resolutions may be used. Additional details regarding zones are described with respect to FIGS. **4**B and **5**, as well as elsewhere herein.

[0050] Processor **208** is coupled to backlight assembly **108** to control the amount of light emitted by light sources **116** and/or light sources **118**. In the example of FIG. **2**, processor **208** is coupled to backlight assembly **108** via backlight controller **212**. As also shown in FIG. **2**, backlight controller **212** includes a string backlight driver **222** and an array backlight driver **224**. String backlight driver **222** is configured to control the amount of light emitted by light sources **116**. Array backlight driver **224** is configured to control the amount of light emitted by light sources **118**. Processor **208** may execute code of string backlight driver **222** and/or code of array backlight driver **224**, for example. Alternatively, backlight controller **212** is implemented in the form of hardware (e.g., electrical circuits including one or more processors, logic gates, and/or transistors) that may or may not execute one or both of firmware and software. String backlight driver **222** and/or array backlight driver **224**

may include multiple respective drivers. Alternatively, string backlight driver **224** and array backlight driver **224** are integrated as a single driver.

[0051] String backlight driver **222** is configured to drive a light source of light sources **116** for each row of backlight assembly **108** (e.g., each row of waveguide layer **204**, each row or group of rows of pixels of LC display layer **206**, each row or group of rows of light sources **118**) separately from other light sources in other rows. In embodiments where a row includes multiple light sources of light sources **116**, each of the light sources in the respective row may be driven at a common brightness level. Alternatively or additionally, the multiple light sources may be driven at respective, individual brightness levels that together combine to establish a desired collective average luminance level for the row.

[0052] Array backlight driver **224** is configured to drive a light source of light sources **118** for each zone of the display area of display device **106** separately from other light sources in other zones. In embodiments where a zone includes multiple light sources of light sources **118**, each of the light sources in the respective zone may be driven at a common brightness level. Alternatively or additionally, the multiple light sources may be driven at respective, individual brightness levels that together combine to establish a desired collective average luminance level for the zone.

[0053] Backlight assembly **108** in accordance with one or more embodiments is configured to transmit light **234** to LC display layer **206**. Light **234** in accordance with one or more embodiments is white light (or near-white light). Each light source of light sources **116** and/or **118** in accordance with an embodiment are thus configured to emit white light. In an alternative embodiment, and as described further with respect to FIG. **8**, light sources **116** and/or light sources **118** are color light sources (e.g., red, green, and/or blue colors). In this alternative, backlight assembly **108** includes a color conversion sheet that transforms (e.g., a portion of) the emitted light to white light (or another color of light) (e.g., by absorbing emitted light and reemitting the light as another color of light). In another alternative embodiment, light sources **116** and/or light sources **118** include arrangements of three color light sources (e.g., red, green, and blue colors). In such cases, the brightness of each color in a respective row (i.e., in the case of light sources **116**) and/or zone (i.e., in the case of light sources **118**) may be controlled separately from the colors in other rows and/or zones. The respective brightness levels of the colors may be determined as a function of the image to be displayed. In some cases, the brightness of each light source may depend on the intensities of the respective colors present in the image to be displayed.

[0054] As discussed with respect to FIG. **1** (as well as elsewhere herein), reflective layer **120** is configured to receive at least a portion of the light emitted by light sources **116** and away from LC display layer **206** and reflect the received portion of light toward LC display layer **206** (and away from layer **114**). Reflective layer **120** in accordance with an embodiment (and as described further with respect to FIGS. **7**, **8**, and **9**, as well as elsewhere herein) is arranged between light sources **118** and waveguide layer **204**. In accordance with an alternative embodiment (and as described further with respect to FIGS. **6**A, **6**B, and **9**, as well as elsewhere herein), light sources **118** are arranged between reflective layer **120** and waveguide layer **204**. While only a single reflective layer **120** is shown in FIG. **2**, in some embodiments, backlight assembly **108** includes multiple reflective layers (e.g., a reflective layer arranged between light sources **118** and waveguide layer **204** and another reflective layer arranged beneath light sources **118** (i.e., opposite of the first reflective layer)). Furthermore, while reflective layer **120** is shown in FIG. **2** as a sub-layer of array layer **114**, it is also contemplated herein that reflective layer **120** may be a separate layer from array layer **114** (e.g., as a separate layer of backlight assembly **108**, as a base layer of display device **106** (e.g., wherein backlight assembly **108** is arranged between the base layer and LC display layer **206**), or as a sub-layer of waveguide layer **204**).

[0055] LC display layer **206** is disposed adjacent or proximate to backlight assembly **108**. One or more intervening layers may be present. In some cases, backlight assembly **108** and LC display layer **206** are in contact with each other. Alternatively, one or more transparent layers are disposed between backlight assembly **108** and LC display layer **206**. For example, an adhesive film may be disposed between backlight assembly **108** and LC display layer **206**. A diffusing or other layer or element may nonetheless be disposed between backlight assembly **108** and LC display layer **206** in some cases.

[0056] LC display layer **206** is configured to selectively filter light **234** generated by the plurality of light sources to produce filtered light **236**. LC display layer **206** may include one or more layers arranged in a liquid crystal panel. For example, respective layers may be provided in the liquid crystal panel for separate color filtering. The liquid crystal panel (or a layer thereof) defines an array **228** of pixels addressable by processor **208** (and/or display drivers **214**). The number of pixels in array **228** may outnumber the resolution of the zone arrangement in backlight assembly **108**. The resolution of array **228** shown in FIG. **2** and the resolution(s) of zone(s) in backlight assemblies described herein (with respect to FIG. **2** or otherwise) are merely exemplary and provide for ease in illustration. For example, array **324** may have a resolution one, two, or more orders of magnitude higher than the resolution of zones of backlight assembly **108**.

[0057] Processor **208** in accordance with an embodiment individually controls each pixel in array **228** to determine the extent to which light from light sources **116** and/or **118** passes through LC display layer **206**. In this example, processor **208** is configured to execute code of LC controller **226** and/or display drivers **214** to control LC display layer **206**. Alternatively, display drivers **214** are implemented in the form of hardware (e.g., electrical circuits including one or more processors, logic gates, and/or transistors) that may or may not execute one or both of firmware and software. Processor **208** and/or display drivers **214** may be configured to adjust the image tone levels for array **228** of LC display layer **206** to coordinate the filtering of the light with the brightness levels of the light sources. For example, the amount of filtering may be adjusted along a boundary between adjacent zones of backlight assembly **108** with different brightness levels (e.g., different average luminance levels for different zones). If the pixels on either side of the boundary are intended to have similar image tone levels, the pixels in the zone with the brighter backlighting are directed to filter more light relative to pixels in another zone with a dimmer backlighting. The filtering of a respective pixel of LC display layer **206** may thus be controlled in a manner that takes into account the amount of light emitted by the light

sources **116** and/or **118** in which the pixel is disposed. The average luminance level of backlight assembly **108** and the amount of filtering are thus two controllable variables that combine to achieve a desired tone or brightness for each pixel.

[0058] Processor **208** and/or backlight controller **212** process image data **246** to determine an average luminance level of a display area of display device **106**. In some cases, image data **246** is processed separately for a subset of a display area of LC display layer **206** from the image data for other subsets of the display area. The average luminance level for portions of the display area may be determined on a zone-by-zone basis, a row-by-row basis, and/or in any other grouping of zones and/or other subsets of the display area.

[0059] In some embodiments, processor **208** and/or backlight controller **212** performs additional processing on image data **246** (e.g., before or after determining an average luminance level of the display area). For example, processor **208** and/or backlight controller **212** in accordance with an embodiment includes a low pass filter (LPF) configured to smooth the brightness levels of nearby zones and/or rows. As a result of the smoothing, differences between the brightness levels in adjacent rows may be limited to a predetermined amount. Artifacts or irregularities in the resulting displayed images may thus be avoided or reduced. The low pass filter may be implemented in hardware, software, firmware, or a combination thereof.

[0060] Ambient light sensor **238** is configured to detect ambient light of the room or location user device **102** is located in and transmit ambient light data **250** to processor **208**. As shown in FIG. **2**, ambient light sensor **238** is integrated in display system **104**. Alternatively, ambient light sensor **238** may be a separate component of user device **102**, a standalone ambient light sensor external to user device **102**, or integrated in a device communicatively coupled to user device **102**. As described elsewhere herein, processor **208** and/or backlight controller **212** in accordance with some embodiments controls light sources **116** and/or light sources **118** based on ambient light data **250** received from ambient light sensor **238**.

[0061] In some embodiments, and as described further with respect to FIG. **3** (as well as elsewhere herein), user device **102** operates in multiple power modes. For instance, in accordance with an embodiment user device **102** operates in a power saving mode and a regular power mode. If user device **102** is operating in power saving mode, processor **216** transmits a notification **248** to processor **208** indicating the power saving mode is active. As described elsewhere herein, processor **208** and/or backlight controller **212** in accordance with some embodiments controls light sources **116** and/or light sources **118** based on whether or not the power saving mode is active. While power saving mode and regular power mode are described herein, user device **102** may operate in other types of power modes, including, but not limited to a performance mode (e.g., a high dynamic range (HDR) mode), an ultra-power saving mode, and/or the like.

[0062] Accordingly, example embodiments of processors (e.g., processor **208**) and backlight controllers (e.g., backlight controller **212**) are configured to control light sources **116** associated with a row (e.g., by applying a voltage to, or removing a voltage from, electrodes associated with the row) and/or light sources **118** associated with a zone (e.g., by applying a voltage to, or removing a voltage from, electrodes associated with the zone).

[0063] Embodiments of backlight controllers (or processors executing code of a backlight controller) may operate in various ways to illuminate a portion of light sources of the backlight. For instance, FIG. **3** shows a flowchart **300** of a process for illuminating a portion of light sources of a compound backlight, according to an example embodiment. Backlight controller **212** of FIG. **2** may operate according to flowchart **300**, in an embodiment. Note that not all steps of flowchart **300** need be performed in all embodiments. Further structural and operational embodiments will be apparent to persons skilled in the relevant art(s) based on the following description of FIG. **3** with respect to FIG. **2**.

[0064] Flowchart **300** begins with step **302**. In step **302**, image data is received. For example, processor **208** of FIG. **2** receives image data **246**. In some cases, image data **246** comprises image data for the entire display area of LC display layer **206**. Alternatively, image data **246** comprises image data for a subset of the display area (e.g., a zone, a plurality of zones, a row of zones, a plurality of rows of zones, etc.). Image data **246** may correspond to image data generated by processor **216**, image data generated by another component of user device **102**, image data **242** stored in memory **218**, image data **244** received from image source **240**, and/or the like.

[0065] In step **304**, a determination of whether an average luminance level of a display area is below a threshold is made. For example, backlight controller **212** (or processor **208** executing code of backlight controller **212**) of FIG. **2** determines whether an average luminance level of a display area is below a threshold based on image data **246**. In accordance with an embodiment, backlight controller **212** makes the determination based also on ambient light data **250**. Image data **246** may be processed for the entire display area of LC display layer **206** or a subset of the display area. For instance, the average luminance level of the display area may be determined for each zone, each group of zones, each row of zones, each plurality of rows of zones, and/or any other grouping of zones or other subset of the display area of LC display layer **206**. In this way, an average luminance level for that subset of the display area is determined based on image data local to the subset, rather than global image data for the entire display area. In addition to determining average luminance level (for an entire display area and/or one or more subsets of the display area), backlight controller **212** may also determine, based on image data **246**) an image histogram, an image contrast level, and/or any other information that may be used to control light sources **116** and/or light sources **118**. If the average luminance level of the display area is not below the threshold, flowchart **300** proceeds to step **306**. If the average luminance level of the display area is below the threshold, flowchart **300** proceeds to step **308**.

[0066] In step **306**, a portion of the plurality of first light sources and a portion of the plurality of second light sources are illuminated. For example, backlight controller **212** (or processor **208** executing code of backlight controller **212**) of FIG. **2** illuminates a portion of light sources **116** and a portion of light sources **118** corresponding to the analyzed image data of image data **246**. For instance, if in step **304** backlight controller **212** analyzes image data of the entire display area and determines an average luminance level of the display area is above the threshold, backlight controller

212 in accordance with an embodiment illuminates all of light sources 116 and light sources 118. If in step 304 backlight controller 212 analyzes image data corresponding to a particular row or zone, backlight controller 212 in accordance with an embodiment illuminates light sources of light sources 116 and light sources 118 that correspond to that particular row or zone. Additional details regarding zones, rows, and controlling subsets of light sources corresponding to zones and rows are discussed with respect to FIGS. 4B and 5, as well as elsewhere herein. By illuminating both edge lights (light sources of light sources 116) and array lights (light sources of light sources 118), backlight assembly 108 is able to emit light at a higher luminance level than if only array lights or edge lights were illuminated, thereby improving the quality of content displayed by the zone or row illuminated by the array lights and edge lights.

[0067] In step 308, a determination of whether or not a power saving mode is active is made. For example, backlight controller 212 (or processor 208 executing code of backlight controller 212) of FIG. 2 determines whether or not a power saving mode is active. In accordance with an embodiment, backlight controller 212 determines whether the power saving mode is active based on whether or not a notification 248 is received from processor 216 indicating the power saving mode is active. In accordance with an embodiment, a user interacts with a user interface of user device 102 or a remote control device of user device 102 (not shown in FIG. 2) to activate (or deactivate) power saving mode. In accordance with another embodiment, user device 102 (or a component or application of user device 102) automatically activates power saving mode if a particular condition is met (e.g., a charge level of a battery of user device 102 is below a threshold). If the power saving mode is not active, flowchart 300 proceeds to step 310. If the power saving mode is active, flowchart 300 proceeds to step 316.

[0068] In step 310, a determination of whether a level of contrast is at or above a high contrast threshold is made. For example, backlight controller 212 (or a processor 208 executing code of backlight controller 212) of FIG. 2 determines whether a level of contrast is at or above a high contrast threshold. Backlight controller 212 determines the level of contrast of an image to be displayed by display device 106 based on image data 246. In accordance with another embodiment, backlight controller 212 determines the level of contrast for a particular zone or row of display device 106. If the level of contrast is at or above the high contrast threshold, flowchart 300 proceeds to step 312. Otherwise, flowchart 300 proceeds to step 316.

[0069] Step 310 is described with respect to determining whether a level of contrast is at or above a high contrast threshold. In an alternative embodiment, backlight controller 212 is configured to determine whether a level of contrast is at or below a low contrast threshold.

[0070] In step 312, a determination of whether a level of ambient luminance is at or above a high ambient luminance threshold is made. For example, backlight controller 212 (or a processor 208 executing code of backlight controller 212) of FIG. 2 determines whether a level of ambient luminance is at or above a high ambient luminance threshold based on ambient light data 250. If the level of ambient luminance is not at or above the high luminance threshold, flowchart 300 proceeds to step 314. If the level of ambient luminance is at or above the high luminance threshold, flowchart 300 proceeds to step 316.

[0071] Step 312 is described with respect to determining whether a level of ambient luminance is at or above a high ambient luminance threshold. In an alternative embodiment, backlight controller 212 is configured to determine whether a level of ambient luminance is at or below a low ambient luminance threshold.

[0072] In step 314, a portion of the plurality of second light sources are illuminated. For example, array backlight driver 224 (or processor 208 executing code of array backlight driver 224) of FIG. 2 illuminates a portion of light sources 118 corresponding to the analyzed image data of image data 246. For instance, if in step 304 backlight controller 212 analyzes image data of the entire display area, array backlight driver 224 in accordance with an embodiment illuminates all of light sources 118. If in step 304 backlight controller 212 analyzes image data corresponding to a particular row or zone, array backlight driver 224 in accordance with an embodiment illuminates light sources of light sources 118 that correspond to that particular row or zone. Additional details regarding zones, rows, and controlling subsets of light sources corresponding to zones and rows are discussed with respect to FIGS. 4B and 5, as well as elsewhere herein.

[0073] In step 316, a portion of the plurality of first light sources are illuminated. For example, string backlight driver 222 (or processor 208 executing code of string backlight driver 222) of FIG. 2 illuminates a portion of light sources 116 corresponding to the analyzed image data of image data 246. For instance, if in step 304 backlight controller 212 analyzes image data of the entire display area, string backlight driver 222 in accordance with an embodiment illuminates all of light sources 116. If in step 304 backlight controller 212 analyzes image data corresponding to a particular row or zone, string backlight driver 222 in accordance with an embodiment illuminates light sources of light sources 116 that correspond to that particular row or zone. Additional details regarding zones, rows, and controlling subsets of light sources corresponding to zones and rows are discussed with respect to FIGS. 4B and 5, as well as elsewhere herein.

[0074] In step 316, backlight controller 212 may also disable (or otherwise not use) drivers of array backlight driver 224 that control light sources of light sources 118 corresponding to the particular zone or row the illuminated light sources of light sources 116 correspond to. For instance, if the entire display area is analyzed and all of light sources 116, backlight controller 212 disables array backlight driver 224. If light sources of light sources 116 are illuminated for a particular zone or row, backlight controller 212 disables the driver that controls light sources of light sources 118 corresponding to (at least a portion of) the particular zone or row. By selectively disabling drivers of array backlight driver 224 in this manner, backlight controller 212 reduces power consumed by display device 106, as fewer light sources are powered to light (e.g., a portion of or all of) the display area.

III. Example Backlight Assembly Embodiments with Edge and Array Light Sources

[0075] As described herein, a (e.g., compound) backlight assembly such as backlight assembly 108 of FIGS. 1 and 2

includes edge and array light sources. Backlight assembly **108**, light sources **116** (edge lights), and light sources **118** (array lights) may be configured in various ways to perform their functions, in embodiments. For instance, FIG. **4**A shows a cross-sectional side view **400**A of a backlight assembly **420** that includes edge light sources and array light sources, according to an example embodiment. FIG. **4**B shows a top view **400**B of backlight assembly **420** of FIG. **4**A, according to an example embodiment. Backlight assembly **420** is an example of backlight assembly **108**, described with respect to FIGS. **1** and **2**. Further structural and operational embodiments will be apparent to persons skilled in the relevant art(s) based on the following description of FIGS. **4**A and **4**B.

[0076] As shown in FIGS. **4**A and **4**B, backlight assembly **420** comprises a diffusion layer **402**, one or more prism sheets **404** ("prism sheet **404**" herein), a waveguide layer **406**, one or more pyramid sheets **430** ("pyramid sheets **430**" herein), an array layer **408**, and light sources **410**A-**410**H. Array layer **408** comprises light sources **410**A-**410**P. Pyramid sheets **430** are configured to scatter light emitted by array layer **408**. In accordance with an embodiment, pyramid sheets **430** are polymer sheets with pyramids (or other shape suitable for spreading light) stamped into them. Diffusion layer **402** and prism sheets **404** are configured to normally distribute light transmitted through waveguide layer **406**.

[0077] Waveguide layer **406** is a further example of waveguide **112** of FIG. **1** and waveguide layer **204** of FIG. **2**. Waveguide layer **406** is transparent, has opposing first and second surfaces **422** and **424** and opposing first and second edges **426** and **428**. For surfaces **422** and **424** and edges **426** and **428**, there can be small tilt angles (angles other than zero) between them for performances and uniformities. Waveguide layer **406** may be made of any suitable material, including a transparent polymer, glass, a fiber optic material, etc. Waveguide layer **406** is configured to guide transversal (or near transversal) light (e.g., light emitted by light sources **412**A-**412**P) and to spread and guide orthogonal (or near orthogonal) light (e.g., light emitted by light sources **410**A-**410**H). This particular design for waveguide layer **406** enables the use of the same layer to facilitate illumination of zones of backlight assembly **850** by edge lights (light sources **410**A-**410**H) and array lights (light sources **412**A-**412**P). Thus, the structure of backlight assembly **850** can be relatively thinner than an assembly using separate waveguides for light emitted by light sources **410**A-**410**H and light emitted by light sources **412**A-**412**P.

[0078] Light sources **410**A-**410**H ("light sources **410**" collectively) are examples of light sources **116** of FIGS. **1** and **2**. Although five individual light sources are included in light sources **410** in the example of FIG. **4**B, any number of light sources may be present, including tens, hundreds, or even greater numbers of light sources, etc. Each of light sources **410** is configured to transmit light into waveguide layer **406** through edge **426**.

[0079] Light sources **412**A-**412**P ("light sources **412**" collectively) are examples of light sources **118** of FIGS. **1** and **2**. Although sixteen individual light sources are included in light sources **412** in the example of FIG. **4**B, any number of light sources may be present, including tens, hundreds, or even greater numbers of light sources, etc. Each of light sources **412** is configured to transmit light into waveguide layer **406** through surface **422**.

[0080] Layers of diffusion layer **402**, prim sheet **404**, waveguide layer **406**, pyramid sheets **430**, and/or array layer **408** may be attached in any manner such that adjacent layers are flat (or nearly flat) against each other. For instance, the layers may be attached by an adhesive material (e.g., an epoxy, a thin film adhesive, etc.), by lamination, by fabricating a layer onto a surface of another layer (e.g., fabricating prim sheet **404** onto surface **424** of waveguide layer **406**), or in another manner.

[0081] As shown in FIG. **4**B, backlight array **420** has a plurality of zones **418**A-**418**D. Zones **418**A-**418**D may be arranged in a matrix or array as shown in FIG. **4**B. In this example, zones **418**-**418**D are arranged in two contiguous rows and two contiguous columns. The rows and columns may or may not be oriented along the vertical and horizontal axes of the viewable area. In some cases, the size, shape, and other aspects of zones **418**A-**418**D may vary across the viewable area. While each of zones **418**A-**418**D are shown in FIG. **4**B as including four light sources, embodiments described herein are not so limited. For instance, in some embodiments, zones may include fewer (e.g., 1, 2, or 3) light sources, the same number of light sources, and/or more (e.g., tens, hundreds, etc.) light sources. In some embodiments, one or more zones include a different number of light sources than another light source. Furthermore, while zones **418**A-**418**D are arranged in square matrices, embodiments described herein may be arranged in other shapes as well.

[0082] As shown in FIG. **4**B, light sources of light sources **410** are arranged such that a respective subset of light sources **410** are associated with a respective subset of zones **418**A-**418**D. For instance, light sources **410**A-**410**D are associated with zones **418**A and **418**B and light sources **410**E-**410**H are associated with zones **418**C and **418**D. In this context, zones **418**A and **418**B comprise a first row of zones and zones **418**C and **418**D comprise a second row of zones. While each row shown in FIG. **4**B includes two zones, embodiments of rows described herein may include fewer (e.g., **1** zone) or greater (e.g., tens, hundreds, etc.) numbers of zones.

[0083] FIG. **4**A illustrates how light is passed from backlight assembly **420**. For instance, suppose light source **410**A and light source **412**C are in an "on" state (i.e., light sources **410**A and **412**C are illuminated). With respect to light source **410**A, light source **410**A emits light (represented as light **414**A and light **414**B), which enters (i.e., is transmitted into) waveguide layer **406** at edge **426**. A portion of light emitted by light source **410**A (represented as light **414**A) passes through surface **424**, prism sheets **404**, and diffusion layer **402** as extracted light. The extracted light is received by the LC display layer (not shown in FIG. **4**A for brevity). Some of the light emitted by light source **410**A (e.g., light **414**B) is directed away from surface **424** of waveguide layer **428**. In some cases, light **414**B is considered "lost light." However, in other cases, backlight assembly **420** is configured to recapture at least a portion of lost light and direct the recaptured light through waveguide layer **428**, prism sheet **404**, and diffusion layer **402** as extracted recaptured light. Embodiments of backlight assemblies configured to recapture light are discussed further with respect to FIGS. **6**A-**9**, as well as elsewhere herein.

[0084] With respect to light source **412**C, light source **412**C emits light (represented as light **416**), which passes through pyramid sheets **430** (which further scatters light **416**) and enters (i.e., is transmitted into) waveguide layer

406 at surface **422**. Light **416** passes through surface **424**, prism sheet **404**, and diffusion layer **402** as extracted light. The extracted light is received by the LC display layer (not shown in FIG. **4**A for brevity).

[0085] In some embodiments, a backlight controller (e.g., backlight controller **212** of FIG. **2**) is configured to selectively illuminate zones **418**A-**418**D of backlight assembly **420**. Backlight controller **212** may operate in various ways to selectively illuminate zones **418**A-**418**D of backlight assembly **420**, in embodiments. For instance, FIG. **5** shows a flowchart **500** of a process for illuminating a portion of light sources of a compound backlight, according to an example embodiment. Backlight controller **212** may operate according to flowchart **500**, in an embodiment. Note that not all steps of flowchart **500** need be performed in all embodiments. Further structural and operational embodiments will be apparent to persons skilled in the relevant art(s) based on the following description of FIG. **5** with respect to FIGS. **2** and **4**B.

[0086] Flowchart **500** begins with step **502**. In step **502**, an average luminance level of a first zone of a display area is determined to be below a threshold based on image data and an average luminance level of a second zone of the display area is determined to be above the threshold based on the image data. For instance, as a non-limiting running example, suppose backlight controller **212** of FIG. **2** determines an average luminance level of zone **418**A of FIG. **4** is below a threshold based on image data **246** and an average luminance level of zone **418**C is above the threshold based on image data **246**. Backlight controller **212** may determine the average luminance levels of the zones in a similar manner described with respect to step **304** of flowchart **300**.

[0087] In step **504**, a portion of a plurality of first light sources corresponding to the first zone is illuminated. Referring again to the running example described with respect to step **502**, backlight controller **212** of FIG. **2** illuminates light sources **410**A-**410**D (i.e., edge light sources corresponding to zone **418**A). In accordance with an embodiment, backlight controller **212** illuminates all of the light sources (e.g., light sources **410**A-**410**D) corresponding to zone **418**A. In an alternative embodiment, backlight controller **212** illuminates a portion of the light sources (e.g., one, two, or three of light sources **410**A-**410**D) corresponding to zone **418**A. By illuminating edge light sources corresponding to zones with average luminance below a threshold in this manner, embodiments of the present disclosure can reduce power consumed by backlight assembly **420** compared to using array light sources to illuminate the same zone. Furthermore, in some embodiments, backlight controller **212** disables the driver of array lights associated with zone **418**A (e.g., light sources **412**A, **412**B, **412**E, and **412**F). By selectively disabling drivers of array lights associated with a zone with an average luminance level below a threshold in this way, the power consumed by backlight assembly **420** is further reduced.

[0088] In step **506**, a portion of a plurality of second light sources corresponding to the second zone is illuminated. Referring again to the running example described with respect to steps **502** and **504**, backlight controller **212** of FIG. **2** illuminates light sources **412**I, **412**J, **412**M, and **412**N (i.e., array light sources corresponding to zone **418**C). In accordance with an embodiment, backlight controller **212** illuminates all of the light sources (e.g., light sources **412**I, **412**J, **412**M, and **412**N) corresponding to zone **418**C. In an alternative embodiment, backlight controller **212** illuminates a portion of the light sources (e.g., one, two, or three of light sources **412**I, **412**J, **412**M, and **412**N) corresponding to zone **418**C. By determining to illuminate array light source subsequent to having determined an average luminance level of zone **418**C is above a threshold in this way, backlight controller **212** (e.g., only) enables drivers of array lights of the appropriate zone in a manner that improves the power efficiency of backlight assembly **420** (e.g., because drivers that are not needed are not powered). In accordance with an embodiment, backlight controller **212** illuminates one or more edge light sources (e.g., one or more of light sources **410**E-**410**H) corresponding to zone **418**C. In this manner, backlight assembly **108** is able to emit light from zone **418**C at a higher average luminance level than if only array light sources **4121**, **412**J, **412**M, and **412**N were illuminated. Alternatively, by utilizing edge light sources in conjunction with array light sources for a zone with a high average luminance level, the number of array light sources within the zone may be reduced, thereby decreasing manufacturing cost of the backlight assembly. In another alternative, by utilizing edge light sources in conjunction with array light sources for a zone with a high average luminance level, the amount of current driven to the array light sources within the zone may be reduced, thereby improving the power efficiency of the device.

[0089] Flowchart **500** has been described with respect to backlight controller **212** selectively illuminating edge light sources (e.g., one or more of light sources **410**A-**410**H) and/or array light sources (e.g., one or more of light sources **412**A-**412**P) based on average luminance levels of respective zones. It is also contemplated herein that backlight controller **212** may selectively illuminate edge and/or array light sources based on other factors as well. For instance, backlight controller **212** in accordance with an embodiment illuminates (e.g., only) edge light sources for zones with low contrast (e.g., a level of contrast below a high contrast threshold and/or level of contrast at or below a low contrast threshold) and illuminates (e.g., only) array light sources (or array lights and edge lights) for zones with high contrast (e.g., a level of contrast at or above a high contrast threshold (e.g., as described with respect to step **310** of flowchart **300** of FIG. **3**)). Furthermore, backlight controller **212** in accordance with another embodiment compares the contrast level between two zones when determining whether to use edge light sources, array light sources, or a combination of array and edge light sources. By selectively illuminating edge and/or array lights for particular zones based on levels of contrast, display device **106** is able to achieve a high contrast ratio between zones illuminated with edge lights (and not array lights) and zones illuminated with array lights (or array and edge lights), thereby improving the quality of the image displayed by display device **106**.

[0090] Furthermore, in some embodiments, backlight controller **212** is configured to illuminate edge light sources and array light sources for a particular zone. For instance, in step **506** of flowchart **500**, backlight controller **212** may illuminate both edge lights and array lights that correspond to the second zone. Alternatively, backlight controller **212** illuminates both edge lights and array lights if an average luminance level of a zone is above a second (e.g., higher) threshold. In accordance with another embodiment, backlight controller **212** illuminates both edge lights and array lights for zones where an image has a flat field (e.g., a

monochrome area). By illuminating both edge lights and array lights for a zone with a flat field, display device **106** improves the uniformity of the displayed image. Further still, if edge lights and array lights are illuminated for flat field areas, the number of light sources in the array can be reduced.

[0091] Embodiments are described in further detail as follows. The next subsection describes backlight assemblies with reflective layers, followed by a subsection describing backlight assemblies with reflective layers located in between the waveguide layer and the array layer, followed by a subsection describing backlight assemblies with multiple reflective layers.

A. Example Backlight Assembly Embodiments with a Reflective Layer

[0092] Display device **106** (including backlight assembly **108** and display **110**) may be configured in various ways to perform its functions, in embodiments. For instance, as discussed elsewhere herein, backlight assembly **108** may include one or more reflective layers (e.g., reflective layer **120** of FIG. **1**). The reflective layer of backlight assembly **108** may be configured in various ways, in embodiments. For example, FIG. **6**A shows a cross-sectional view **600**A of a display layer and a backlight assembly that includes edge light sources and array light sources, according to an example embodiment. As shown in FIG. **6**A, cross-sectional view **600**A includes a display layer **602** and a backlight assembly **650**A, each of which are respective further examples of display **110** and backlight assembly **108**, as described with respect to FIG. **1**. In accordance with an embodiment, display layer **602** and backlight assembly **650**A are attached in a manner such that display layer **602** is flat (or nearly flat) against backlight assembly **650**A. For instance, display layer **602** may be attached to backlight assembly **650**A by an adhesive material, by lamination, by fabricating a layer onto a surface of another layer (e.g., by fabricating display layer **602** onto a layer of backlight assembly **650**A), or in another manner.

[0093] Backlight assembly **650**A includes a diffusion layer **604**, one or more prism sheets **606** ("prism sheets **606**" herein), a waveguide layer **608**, one or more pyramid sheets **610** ("pyramid sheets **610**" herein), an array layer **632**, and a light source **616**A, each of which are respective examples of diffusion layer **402**, prism sheets **404**, waveguide layer **406**, pyramid sheets **430**, array layer **408**, and light source **410**A, as each described with respect to FIGS. **4**A and **4**B. Waveguide layer **608** has opposing first and second surfaces **634** and **636** and opposing first and second edges **638** and **640**.

[0094] As shown in FIG. **6**A, array layer **632** comprises a light source layer **612** (comprising light sources **618**A-**618**C) and a reflective layer **614**. In accordance with an embodiment, light source layer **612** includes an optically clear (e.g., transparent) resin, film, or other material that surrounds light sources **618**A-**618**C. Light sources **618**A-**618**C are examples of light sources **412**A-**412**P, as described with respect to FIGS. **4**A and **4**B.

[0095] Reflective layer **614** is a further example of reflective layer **120** (as described with respect to FIG. **1**) and is arranged beneath light sources **618**A-**618**C (such that light sources **618**A-**618**C are arranged between reflective layer **614** and waveguide layer **608**). Reflective layer **614** may be a specular reflective surface, a diffused reflective surface, or another type of reflective surface. Reflective layer **614** is configured to reflect light transmitted by light source **616**A (and other edge light sources of backlight assembly **650**A, not shown in FIG. **6**A) into (or toward) waveguide layer **608** through surface **634** of waveguide layer **608**.

[0096] With respect to reflective layer **614**, FIG. **6**A illustrates how light is passed from backlight assembly **650**A to display layer **602**. For instance, suppose light sources **616**A and **618**C are in an "on" state (i.e., light sources **616**A and **618**C are illuminated). With respect to light source **616**A, light source **616**A emits light (represented as light **620**A and **620**B), which enters (i.e., is transmitted into) waveguide layer **608** at edge **638**. A portion of light emitted by light source **616**A (represented as light **620**A) passes through surface **636**, prism sheets **606**, and diffusion layer **604** as extracted light **652**. Extracted light **652** is received by display layer **602**.

[0097] Some of the light emitted by light source **616**A (represented as light **620**B) is directed away from surface **636** of waveguide layer **608**. Backlight assembly **650**A is configured to recapture at least a portion of light **620**B. For instance, as shown in FIG. **6**A, light **620**B passes through surface **634**, pyramid sheets **610**, and light source layer **612**. Reflective surface **614** is configured to reflect light **620**B as reflected light **622**. Reflected light **622** passes through light source layer **612**, through pyramid sheets **610**, and into waveguide layer **608** via surface **634**. Reflected light **622** passes through surface **636**, prism sheets **606**, and diffusion layer **604** as extracted light **654**. Extracted light **654** is received by display layer **602**. By configuring reflective surface **614** in this manner, backlight assembly **650**A is able to recapture light emitted by light source **616**A that would otherwise be lost, thereby increasing the light output by backlight assembly **650**A when utilizing edge lights (e.g., light source **616**A).

[0098] With respect to light source **618**C, light emitted by light source **618**C passes through backlight assembly **650**A in a similar manner to light emitted by light source **412**C passing through backlight assembly **420**, as described with respect to FIG. **4**A. Light source **618**C emits light (represented as light **624**), which passes through pyramid sheets **610** (which further scatters light **624**) and enters (i.e., is transmitted into) waveguide layer **608** at surface **634**. Light **624** passes through surface **636**, prism sheets **606**, and diffusion layer **604** as extracted light **656**. Extracted light **656** is received by display layer **602**.

[0099] An example embodiment of a backlight assembly with array light sources arranged between a waveguide layer and a reflective layer has been described with respect to cross-sectional view **600**A of FIG. **6**A. In a further embodiment, backlight assembly **108** is configured with array light sources oriented away from the waveguide layer. For example, FIG. **6**B shows a cross-sectional view **600**B of a display layer and a backlight assembly that includes edge light sources and array light sources, according to another example embodiment. As shown in FIG. **6**B, cross-sectional view **600**B includes display layer **602** as described with respect to FIG. **6**A and a backlight assembly **650**B. Backlight assembly **650**B is a further example of backlight assembly **108** described with respect to FIG. **1**. In accordance with an embodiment, backlight assembly **650**B is attached to display layer **602** in any of the manners described with respect to display layer **602** and backlight assembly **650**A of FIG. **6**A.

[0100] Backlight assembly **650**B includes a diffusion layer **604**, prism sheets **606**, waveguide layer **608**, pyramid sheets **610**, and light source **616**A, as described with respect to FIG. **6**A, and an array layer **642**. Array layer **642** comprises a transparent sublayer **626**, light source layer **628** (comprising light sources **618**A-**618**C), and reflective layer **614** (as described with respect to FIG. **6**A). In accordance with an embodiment, light source layer **628** includes an optically clear resin, film, or other material that surrounds light sources **618**A-**618**C. Transparent sublayer **626** in accordance with an embodiment is an optically clear flexible printed circuit board to which light sources **618**A-**618**C are mounted.

[0101] As shown in FIG. **6**B, light sources **618**A-**618**C are mounted to transparent sublayer **626** and oriented toward reflective layer **614** and away from surface **634** of waveguide layer **608**. To illustrate the operation of light sources **618**A-**618**C with respect to array layer **642**, FIG. **6**B includes representations of light emitted by light source **618**B. In this example, light source **618**B is in an "on" state (i.e., illuminated) and emits light (represented as light **630**A). Light source **618**B transmits light **630**A toward reflective layer **614** to cause reflective layer **614** to reflect light **630**A into (pyramid sheets **610** and) waveguide layer **608** through surface **634** as reflected light **630**B. Reflected light **630**B passes through surface **636**, prism sheets **606**, and diffusion layer **604** as extracted light **658**. Extracted light **658** is received by display layer **602**. By orienting light sources **618**A-**618**C to transmit light toward reflective layer **614** in this manner, backlight assembly **650**B reduces or eliminates the presence of "hot spots" (e.g., areas where light emitted by light sources **618**A-**618**C are less effectively diffused through a backlight assembly (e.g., directly above an array light source)). Thus, backlight assembly **650**B improves the uniformity of extracted light received by display layer **602**. Furthermore, the reflection of light **630**A as reflected light **630**B causes scattering of light emitted by light source **618**B; therefore, in some embodiments of backlight **650**B, the number of pyramid sheets in pyramid sheets **610** may be reduced compared to designs where light sources **618**A-**618**C are oriented toward waveguide layer **608** (e.g., as in backlight **650**A). This allows for a thinner backlight assembly while still sufficiently scattering light emitted by light sources **618**A-**618**C.

B. Example Backlight Assembly Embodiments with a Reflective Layer Located in Between the Waveguide Layer and the Array Layer

[0102] In some embodiments of backlight assembly **108**, reflective layer **120** is arranged between the waveguide layer and the array layer. Backlight assemblies with reflective layers arranged between a waveguide layer and an array layer may be configured in various ways, in embodiments. For instance, FIG. **7** shows a cross-sectional view **700** of a backlight assembly that includes edge light sources and array light sources, according to another example embodiment. As shown in FIG. **7**, cross-sectional view **700** includes a display layer **702** and a backlight assembly **750**, each of which are respective further examples of display **110** and backlight assembly **108**, as described with respect to FIG. **1**. In accordance with an embodiment, backlight assembly **750** is attached to display layer **702** in any of the manners described with respect to display layer **602** and backlight assembly **650**A of FIG. **6**A.

[0103] Backlight assembly **750** includes a diffusion layer **704**, one or more prism sheets **706** ("prism sheets **706**" herein), a waveguide layer **708**, a reflective layer **710**, one or more pyramid sheets **712** ("pyramid sheets **712**" herein), an array layer **742**, and a light source **718**A. Diffusion layer **704**, prism sheets **706**, waveguide layer **708**, pyramid sheets **712**, and light source **718**A are each respective examples of diffusion layer **402**, prism sheets **404**, waveguide layer **406**, pyramid sheets **430**, and light source **410**A, as each described with respect to FIGS. **4**A and **4**B. Waveguide layer **708** has opposing first and second surfaces **734** and **736** and opposing first and second edges **738** and **740**.

[0104] Array layer **742** is a further example of array layer **408** of FIG. **4**. As shown in FIG. **7**, array layer **742** comprises a light source layer **714** (comprising light sources **720**A and **720**B) and a mounting layer **716**. Light sources **720**A and **720**B are further examples of light sources **412**A-**412**P, as described with respect to FIGS. **4**A and **4**B. Light sources **720**A and **720**B are mounted to mounting layer **716**. In accordance with an embodiment, mounting layer **716** is a printed circuit board or a flexible printed circuit board. In some embodiments, a portion of mounting layer **716** is at least partially reflective (e.g., as a diffused reflective layer (e.g., a white diffusion layer), as a specular reflective layer, etc.).

[0105] Reflective layer **710** is a further example of reflective layer **120** (as described with respect to FIG. **1**) and is arranged between waveguide layer **708** and light sources **720**A-**720**B. Reflective layer **710** is a partially reflective sheet or film that reflects a portion of light received by reflective layer **710**. For example, in a particular example, reflective layer **710** is a fifty percent reflective sheet that reflects fifty percent of (or approximately fifty percent of) the light received by reflective layer **710**.

[0106] With respect to reflective layer **710**, FIG. **7** illustrates how light is passed from backlight assembly **750** to display layer **702**. For instance, suppose light sources **718**A and **720**B are in an "on" state (i.e., light sources **718**A and **720**B are illuminated). With respect to light source **718**A, light source **718**A emits light (represented as light **722**A and **722**B), which enters (i.e., is transmitted into) waveguide layer **708** at edge **738**. A portion of light emitted by light source **718**A (represented as light **722**A) passes through surface **736**, prism sheets **706**, and diffusion layer **704** as extracted light **752**. Extracted light **752** is received by display layer **702**.

[0107] Some of the light emitted by light source **718**A (represented as light **722**B) is directed away from surface **736** of waveguide layer **708**. Backlight assembly **750** is configured to recapture at least a portion of light **722**B. For instance, as shown in FIG. **7**, light **722**B is received by reflective layer **710**. Reflective layer **710** reflects a portion of light **722**B (e.g., 50%) into waveguide layer **708** through surface **734** as reflected light **724**A. Reflected light **724**A passes through surface **736**, prism sheets **706**, and diffusion layer **704** as extracted light **754**. Extracted light **754** is received by display layer **702**. Another portion of light **722**B (e.g., 50%) passes through reflective layer **710** as light **724**B. Depending on the configuration of backlight assembly **750**, light **724**B may be considered "lost" light or may be further recirculated (e.g., reflected off of mounting layer **716** and toward reflective layer **710**). By utilizing a reflective layer arranged between light sources **720**A-**720**B and waveguide layer **708** in this manner, backlight assembly **750** is able to

recover at least a portion (e.g., 50%) of light emitted by edge lights (e.g., light source **718**A) that would otherwise be lost, thereby increasing the light output by backlight assembly **750** when utilizing edge light sources.

[0108] With respect to light source **720**B, light source **720**B emits light **726**. Light **726** is received by reflective layer **710**. Reflective layer **710** reflects a portion of light **726** (50%) away from surface **734** of waveguide layer **708** as reflected light **728**A. Another portion of light **726** (50%) passes through reflective layer **710** as light **728**B. Light **728**B passes through surface **736**, prism sheets **706**, and diffusion layer **704** as extracted light **758**. Extracted light **758** is received by display layer **702**.

[0109] As stated above, reflective layer **710** reflects a portion of light **726** as reflected light **728**A. Reflected light **728**A recirculates through pyramid sheets **712** (which further scatters and distributes reflected light **728**A) and into mounting layer **716**. Mounting layer **716** reflects reflected light **728**A toward surface **734** as reflected light **730**. Reflected light **730** recirculates through pyramid sheets **712** (further scattering and/or distributing reflected light **730**) and is received by reflected layer **710**. In a similar manner described with respect to light **726**, reflective surface **710** reflects a first portion of reflected light **730** as reflected light **732**A and passes a second portion of reflected light **730** as light **732**B. Reflected light **732**A is reflected away from waveguide layer **708** in a similar manner as reflected light **728**A and the process of recirculating and reflecting light continues (not shown in FIG. **7** for illustrative brevity and clarity). Light **732**B passes through surface **736**, prism sheets **706**, and diffusion layer **704** as extracted light **756**. Extracted light **756** is received by display layer **702**.

[0110] As discussed above (and elsewhere herein) backlight assembly **750** includes a (partially) reflective layer **710** arranged in between light sources **720**A-**720**B and waveguide layer **708**. The inclusion of reflective layer **710** causes a portion of light emitted by array light sources (e.g., light sources **720**A and **720**B) to be reflected back through pyramid sheets **712** and "recirculate" as described above. This causes the light emitted by the array light sources to spread (or scatter) further in a shorter distance. Accordingly, some embodiments of backlight assembly **750** may utilize fewer layers configured to scatter light (such as pyramid sheets **712**). This allows for a thinner backlight assembly while still sufficiently scattering light emitted by light sources **720**A and **720**B.

[0111] Furthermore, since the configuration of backlight assembly **750** enables light emitted by array light sources to spread further, a single array light source of backlight assembly **750** may provide light for a larger corresponding portion of a display area of a display device including backlight assembly **750** (e.g., display device **106** of FIG. **1**). Accordingly, backlight assemblies implementing this feature may utilize fewer array light sources to provide extracted light to a display layer; therefore, the manufacturing complexity and material costs are reduced.

[0112] In some embodiments of backlight assembly **108**, other types of reflective layers may be arranged between the waveguide layer and the array layer. For instance, a reflective layer may be configured to pass light emitted by array light sources and reflect (at least a portion of) light emitted by edge light sources. For example, FIG. **8** shows a cross-sectional view **800** of a backlight assembly that includes edge light sources and array light sources, according to another example embodiment. As shown in FIG. **8**, cross-sectional view **800** includes a display layer **802** and a backlight assembly **850**, each of which are respective further examples of display **110** and backlight assembly **108**, as described with respect to FIG. **1**. In accordance with an embodiment, backlight assembly **850** is attached to display layer **802** in any of the manners described with respect to display layer **602** and backlight assembly **650**A of FIG. **6**A.

[0113] Backlight assembly **850** includes a diffusion layer **804**, one or more prism sheets **806** ("prism sheets **806**" herein), a waveguide layer **808**, a reflective layer **810**, one or more pyramid sheets **812** ("pyramid sheets **812**" herein), an array layer **830**, and a light source **820**A. Diffusion layer **804**, prism sheets **806**, waveguide layer **808**, pyramid sheets **812**, array layer **830**, and light source **820**A are each respective examples of diffusion layer **402**, prism sheets **404**, waveguide layer **406**, pyramid sheets **430**, array layer **408**, and light source **410**A, as each described with respect to FIGS. **4**A and **4**B. Waveguide layer **808** has opposing first and second surfaces **832** and **834** and opposing first and second edges **836** and **838**.

[0114] As shown in FIG. **8**, array layer **830** comprises a light source layer **814** (comprising light sources **822**A-**822**C) and a mounting layer **816**. Light sources **822**A-**822**C are further examples of light sources **412**A-**412**P, as described with respect to FIGS. **4**A and **4**B. Light sources **822**A-**822**C are mounted to mounting layer **816**. In the example of FIG. **8**, light sources **822**A-**822**C are color light sources (e.g., red light sources, green light sources, blue light sources, etc.). In accordance with an embodiment, mounting layer **816** is a printed circuit board or a flexible printed circuit board. In some embodiments, a portion of mounting layer **816** is at least partially reflective (e.g., as a diffused reflective layer (e.g., a white diffusion layer), as a specular reflective layer, etc.).

[0115] Reflective layer **810** is a further example of reflective layer **120** (as described with respect to FIG. **1**) and is arranged between waveguide layer **808** and light sources **822**A-**822**C. Reflective layer **810** comprises a color conversion sublayer **818**A and a color reflective sublayer **818**B. Color conversion sublayer **818**A is configured to convert light that passes through it from a first color to a second color. For instance, color conversion sublayer **818**A in accordance with an embodiment is configured to convert light emitted by array light sources (e.g., light sources **822**A-**822**C) from colored light (e.g., blue light) to white light. Color conversion sublayer **818**A may comprise one or more phosphors configured to convert light that passes through the sublayer. For instance, in accordance with an embodiment, color conversion sublayer **818**A comprises a potassium fluorosilicate (KSF) phosphor and a sialon (e.g., β-SiAlON) phosphor to convert blue light emitted by light sources **822**A-**822**C to white light. In an alternative embodiment, color conversion sublayer **818**A is a quantum dot color conversion sublayer.

[0116] Color reflective sublayer **818**B is a selective color reflection layer that selectively reflects a wavelength or range of wavelengths of light. In accordance with an embodiment, color reflective sublayer **818**B is configured to allow light emitted by light sources **822**A-**822**C to pass through (e.g., without reflecting the light). For instance and as a non-limiting example, suppose light sources **822**A-**822**C are configured to emit blue light. In this context, color reflective sublayer **818**B is configured to reflect yellow light

(e.g., not blue light), thereby enabling light emitted by light sources **822**A-**822**C to pass through color reflective sublayer **818**B and into color conversion sublayer **818**A.

[0117] With respect to reflective layer **810**, FIG. **8** illustrates how light is passed from backlight assembly **850** to display layer **802**. For instance, suppose light sources **820**A and **822**C are in an "on" state (e.g., light sources **820**A and **822**C are illuminated). Further suppose light source **820**A is configured to emit cool white light (i.e., white light that is has a color temperature above neutral white light (e.g., white light with a color temperature above 6000K)) and light source **822**C is configured to emit blue light. Further still, suppose color conversion sublayer **818**A is configured to convert blue light to white light. With respect to light source **820**A, light source **820** emits light (represented as light **824**A and **824**B), which enters (i.e., is transmitted into) waveguide layer **808** at edge. A portion of light emitted by light source **820**A (represented as light **824**A) passes through surface, prism sheets **806**, and diffusion layer **804** as extracted light **852**. Extracted light **852** is received by display layer **802**.

[0118] Some of the light emitted by light source **820**A (represented as light **824**B) is directed away from surface of waveguide layer **808**. Backlight assembly **850** is configured to recapture at least a portion of light **824**B. Color conversion sublayer **818**A converts light **824**B into converted light **826**. Converted light **826** is (mostly or nearly) yellow light (e.g., a portion of converted light **826** contains white light as a result of the additional blue light included in light **824**B). Color reflective sublayer **818**B receives converted light **826** and reflects the yellow portion of converted light **826** into waveguide layer **808** through surface **832** as reflected light **828**A. Reflected light **828**A passes through surface **834**, prism sheets **806**, and diffusion layer **804** as extracted light **854**. Extracted light **854** is received by display layer **802**.

[0119] As shown in FIG. **8**, a portion of converted light **826** is not reflected by color reflective sublayer **818**B and instead passes through color reflective sublayer **818**B, pyramid sheets **812**, and light source layer **814** as light **828**B. Depending on the implementation, light **828**B is "lost" light or a portion of light **828**B may be recaptured using an additional reflective surface (e.g., as described with respect to FIG. **6**A). In an alternative embodiment, light source **820**A is configured such that light emitted by light source **820**A (e.g., light **824**B) when converted by color conversion sublayer **818**A (e.g., as converted light **826**) is completely reflected by color reflective sublayer **818**B (e.g., as reflected light **828**A). For instance, light source **820**A may emit neutral or warm white light (i.e., white light that is has a color temperature below neutral white light (e.g., white light with a color temperature below 3000K)) that, when converted by color conversion sublayer **818**A, is completely reflected by color reflective sublayer **818**B.

[0120] With respect to light source **822**C, light source **822**C emits light **840**. As noted above, in this example, light **840** is blue light. Light **840** passes through color reflective sublayer **818**B and is received by color conversion sublayer **818**A. Color conversion sublayer **818**B converts light **840** to light **842**. Light **842** is (e.g., neutral) white light. Light **842** enters waveguide layer **808** through surface **832** and passes through surface **834**, prism sheets **806**, and diffusion layer **804** as extracted light **856**. Extracted light **856** is received by display layer **802**.

[0121] Thus, example embodiments of a backlight assembly that utilizes a color conversion sublayer and a color reflective sublayer to recapture a portion of light emitted by edge light sources have been described. By utilizing a color conversion sublayer and a color reflective sublayer in these manners, backlight assembly **850** is able to recover at least a portion of (e.g., two-thirds of, or even greater than two-thirds of) light emitted by edge lights (e.g., light source **820**A) that would otherwise be lost, thereby increasing the light output by backlight assembly **850** when utilizing edge light sources.

C. Example Backlight Assembly Embodiments with Multiple Reflective Layers

[0122] In some embodiments of backlight assembly **108**, multiple reflective layers are used to recapture. For instance, FIG. **9** shows a cross-sectional view **900** of a backlight assembly that includes edge light sources and array light sources, according to another example embodiment. As shown in FIG. **9**, cross-sectional view **900** includes a display layer **902** and a backlight assembly **950**, each of which are respective further examples of display **110** and backlight assembly **108**, as described with respect to FIG. **1**. In accordance with an embodiment, backlight assembly **950** is attached to display layer **902** in any of the manners described with respect to display layer **602** and backlight assembly **650**A of FIG. **6**A.

[0123] Backlight assembly **950** is an example embodiment of a backlight assembly that utilizes features of backlight assembly **650**B and backlight assembly **750**, as each respectively described with respect to FIGS. **6** and **7**. As shown in FIG. **9**, backlight assembly **950** includes a diffusion layer **904**, one or more prism sheets **906** ("prism sheets **906**" herein), waveguide layer **908**, a first reflective layer **910**, one or more pyramid sheets **612** ("pyramid sheets **612**" herein), an array layer **962**, and a light source **920**A. Diffusion layer **904**, prism sheets **906**, waveguide layer **908**, pyramid sheets **912**, and light source **920**A are each respective examples of diffusion layer **402**, prism sheets **404**, waveguide layer **406**, pyramid sheets **430**, and light source **410**A, as each described with respect to FIGS. **4**A and **4**B. Waveguide layer **908** has opposing first and second surfaces **942** and **944** and opposing first and second edges **946** and **948**.

[0124] Array layer **962** is a further example of array layer **408** of FIG. **4**. As shown in FIG. **9**, array layer **962** comprises a transparent sublayer **914**, a light source layer **916** (comprising light sources **922**A and **922**B), and a reflective layer **918**. Transparent sublayer **914** in accordance with an embodiment is an optically clear flexible printed circuit board to which light sources **922**A and **922**B are mounted. In accordance with an embodiment, light source layer **916** includes an optically clear resin, film, or other material that surrounds light sources **922**A and **922**B. Light sources **922**A and **922**B are examples of light sources **412**A-**412**P, as described with respect to FIGS. **4**A and **4**B. Light sources **922**A and **922**B are oriented toward reflective layer **918** and away from surface **942** of waveguide layer **908**, in a similar manner as described with respect to light sources **618**-**618**C of backlight assembly **650**B of FIG. **6**B.

[0125] Reflective layer **918** is a further example of reflective layer **120** (as described with respect to FIG. **1**) and is arranged beneath light sources **922**A-**922**B (such that light sources **922**A and **922**B are arranged between reflective layer **918** and waveguide layer **908**). Reflective layer **918**

may be a specular reflective surface, a diffused reflective surface, or another type of reflective surface. Reflective layer **918** is configured to reflect light transmitted by light source **920**A (and other edge light sources of backlight assembly **950**, not shown in FIG. **9**) and light sources **922**A-**922**B (and other array light sources of backlight assembly **950**, not shown in FIG. **9**) into (or toward) waveguide layer **908** through surface **942** of waveguide layer **908** (e.g., in a similar manner as reflective surface **614** of backlight **650**B, as described with respect to FIG. **6**B).

[0126] Reflective layer **910** is also a further example of reflective layer **120** (as described with respect to FIG. **1**) and is arranged between waveguide layer **908** and light sources **922**A-**922**B. Reflective layer **910** is a partially reflective sheet or film that reflects a portion of light received by reflective layer **910**. For example, in a particular example, reflective layer **910** is a fifty percent reflective sheet that reflects fifty percent of (or approximately fifty percent of) the light received by reflective layer **910** (e.g., in a similar manner as reflective layer **710** of backlight **750**, as described with respect to FIG. **7**).

[0127] As noted above, backlight assembly **950** is configured to incorporate features similar to backlight **650**B of FIG. **6**B and backlight **750** of FIG. **7**. To illustrate the operation of light sources **920**A, **922**A, and **922**B with respect to backlight assembly **950**, FIG. **9** includes representations of light emitted by light sources **920**A and **922**B. In this example, light sources **920**A and **922**B are in an "on" state (i.e., light sources **920**A and **922**B are illuminated). With respect to light source **920**A, light source **920**A emits light (represented as light **924**A and **924**B), which enters (i.e., is transmitted into) waveguide layer **908** at edge **946**. A portion of light emitted by light source **920**A (represented as light **924**A) passes through surface **944**, prism sheets **906**, and diffusion layer **904** as extracted light **952**. Extracted light **952** is received by display layer **902**.

[0128] Some of the light emitted by light source **920**A (represented as light **924**B) is directed away from surface **944** of waveguide layer **908**. Backlight assembly **950** is configured to recapture at least a portion of light **924**B. For instance, as shown in FIG. **9**, light **924**B is received by reflective layer **910**. Reflective layer **910** reflects a portion of light **924**B (e.g., 50%) into waveguide layer **908** through surface **942** as reflected light **926**B. Reflected light **926**B passes through surface **944**, prism sheets **906**, and diffusion layer **904** as extracted light **954**. Extracted light **954** is received by display layer **902**.

[0129] Another portion of light **924**B (e.g., 50%) passes through reflective layer **910**, pyramid sheets **912**, transparent sublayer **914**, and light source layer **916** as light **926**A. Reflective surface **918** is configured to reflect light **926**A as reflected light **928**. Reflected light **928** passes through light source layer **916** and transparent sublayer **914**, through pyramid sheets **912** (which further scatter light **928**), and into reflective surface **910**. Reflective surface **910** reflects a portion of reflected light **928** (e.g., 50%) as reflected light **930**B, which recirculates through pyramid sheets **912** and the process of recirculating and reflecting light continues (not shown in FIG. **9** for illustrative brevity and clarity). Another portion of reflected light **928** (e.g., 50%) passes through reflective surface **910** as light **930**A. Light **930**A enters waveguide **908** through surface **942** and passes through surface **944**, prism sheets **906**, and diffusion layer **908** as extracted light **956**. Extracted light **956** is received by display layer **902**.

[0130] With respect to light source **922**B, light source **922**B, light source **922**B emits light (represented as light **932**). In particular, light source **922**B transmits light **932** toward reflective layer **918** to cause reflective layer **918** to reflect light **932** into (pyramid sheets **912**) reflective layer **910** as reflected light **934**. A portion of reflected light **934** (e.g., 50%) passes through reflective layer **910** and into waveguide layer **908** through surface **942** as light **936**A. Light **936**A passes through surface **944**, prism sheets **906**, and diffusion layer **904** as extracted light **958**. Extracted light **958** is received by display layer **902**.

[0131] Another portion of reflected light **934** (e.g., 50%) is reflected by reflective layer **910** as reflected light **936**B. Reflected light **936** recirculates through pyramid sheets **912** (which further scatter/distribute reflected light **936**), transparent sublayer **914**, and light source layer **916**. Reflective layer **918** reflects light **936**B toward surface **942** and into (pyramid sheets **912**) reflective layer **910** as reflected light **938**. Reflective surface **910** reflects a portion of reflected light **938** (e.g., 50%) as reflected light **940**B, which recirculates through pyramid sheets **912** and the process of recirculating and reflecting light continues (not shown in FIG. **9** for illustrative brevity and clarity). Another portion of reflected light **938** (e.g., 50%) passes through reflective surface **910** as light **940**A. Light **940**A enters waveguide **908** through surface **942** and passes through surface **944**, prism sheets **906**, and diffusion layer **908** as extracted light **960**. Extracted light **960** is received by display layer **902**.

[0132] By implementing multiple reflective layers, backlight assembly **950** may further reduce the number of layers needed to diffuse light emitted by array light sources (e.g., light sources **922**A and **922**B). For instance, since light is recirculated through pyramid sheets **912** between reflective layers **910** and **918**, the light is further distributed/scattered. Furthermore, orienting light sources **922**A and **922**B away from waveguide layer **908** and toward reflective layer **918** causes initial scattering of light emitted by light sources **922**A and **922**B, further increasing the distribution of light in a shorter distance. Therefore, the number of pyramid sheets (or other types of light diffusion/scattering/distribution sheets). This allows for a thinner backlight assembly that sufficiently scatters light emitted by light sources **922**A and **922**B. Further still, as discussed with respect to FIG. **6**B, orienting array light sources in this manner reduces or eliminates the presence of hot spots, improving the uniformity of extracted light received by display layer **602**. Moreover, as discussed with respect to FIG. **7**, the recirculation of light emitted by a single array light allows for an array light to provide backlight for a larger corresponding portion of a display area of a display device including backlight assembly **950** (e.g., display device **106** of FIG. **1**). Accordingly, backlight assemblies implementing this feature may utilize fewer array light sources to provide extracted light to a display layer; therefore, the manufacturing complexity and material costs are reduced.

[0133] FIG. **9** illustrates an example embodiment that combines features of backlight assembly **650**B of FIG. **6**B and backlight assembly **750** of FIG. **7** to provide a backlight assembly that utilizes multiple reflective layers. However, it is also contemplated herein that other combinations of reflective layers may be used. For instance, in another

example embodiment, a backlight assembly combines features of backlight assembly **650**B and backlight assembly **850** of FIG. **8**. In this manner, a backlight assembly that includes color array light sources is able to reduce hot spots and improve light scattering, while increasing light output by the backlight assembly when utilizing edge light sources. Other implementations of backlight assemblies that utilize multiple reflective layers are also possible (e.g., a backlight assembly that includes reflective layer **614** of FIG. **6**A, orients light sources **618**A-**618**C as described with respect to FIG. **6**A, and includes reflective layer **710** of FIG. **7**, a backlight assembly that includes reflective layer **614** of FIG. **6**A, reflective layer **710** of FIG. **7**, and reflective layer **810** of FIG. **8**, and/or any other combination of reflective layers described elsewhere herein).

VI. Example Computer System Implementation

[0134] As noted herein, the embodiments described, along with any circuits, components and/or subcomponents thereof, as well as the flowcharts/flow diagrams described herein, including portions thereof, and/or other embodiments, may be implemented in hardware, or hardware with any combination of software and/or firmware, including being implemented as computer program code configured to be executed in one or more processors and stored in a computer readable storage medium, or being implemented as hardware logic/electrical circuitry, such as being implemented together in a system-on-chip (SoC), a field programmable gate array (FPGA), and/or an application specific integrated circuit (ASIC). A SoC may include an integrated circuit chip that includes one or more of a processor (e.g., a microcontroller, microprocessor, digital signal processor (DSP), etc.), memory, one or more communication interfaces, and/or further circuits and/or embedded firmware to perform its functions.

[0135] Embodiments disclosed herein may be implemented in one or more computing devices that may be mobile (a mobile device) and/or stationary (a stationary device) and may include any combination of the features of such mobile and stationary computing devices. Examples of computing devices in which embodiments may be implemented are described as follows with respect to FIG. **10**. FIG. **10** shows a block diagram of an exemplary computing environment **1000** that includes a computing device **1002**. Computing device **1002** is an example of user device **102** of FIGS. **1** and **2** and/or image source **240** of FIG. **2**, each of which may include one or more of the components of computing device **1002**. In some embodiments, computing device **1002** is communicatively coupled with devices (not shown in FIG. **10**) external to computing environment **1000** via network **1004**. Network **1004** comprises one or more networks such as local area networks (LANs), wide area networks (WANs), enterprise networks, the Internet, etc., and may include one or more wired and/or wireless portions. Network **1004** may additionally or alternatively include a cellular network for cellular communications. Computing device **1002** is described in detail as follows.

[0136] Computing device **1002** can be any of a variety of types of computing devices. For example, computing device **1002** may be a mobile computing device such as a handheld computer (e.g., a personal digital assistant (PDA)), a laptop computer, a tablet computer (such as an Apple iPad™), a hybrid device, a notebook computer (e.g., a Google Chromebook™ by Google LLC), a netbook, a mobile phone (e.g., a cell phone, a smart phone such as an Apple® iPhone® by Apple Inc., a phone implementing the Google® Android™ operating system, etc.), a wearable computing device (e.g., a head-mounted augmented reality and/or virtual reality device including smart glasses such as Google® Glass™, Oculus Rift® of Facebook Technologies, LLC, etc.), or other type of mobile computing device. Computing device **1002** may alternatively be a stationary computing device such as a desktop computer, a personal computer (PC), a stationary server device, a minicomputer, a mainframe, a supercomputer, etc.

[0137] As shown in FIG. **10**, computing device **1002** includes a variety of hardware and software components, including a processor **1010**, a storage **1020**, one or more input devices **1030**, one or more output devices **1050**, one or more wireless modems **1060**, one or more wired interfaces **1080**, a power supply **1082**, a location information (LI) receiver **1084**, and an accelerometer **1086**. Storage **1020** includes memory **1056**, which includes non-removable memory **1022** and removable memory **1024**, and a storage device **1090**. Storage **1020** also stores operating system **1012**, application programs **1014**, and application data **1016**. Wireless modem(s) **1060** include a Wi-Fi modem **1062**, a Bluetooth modem **1064**, and a cellular modem **1066**. Output device(s) **1050** includes a speaker **1052** and a display **1054**. Display **1054** is an example of display device **106**, as described with respect to FIGS. **1** and **2**. In accordance with an embodiment, display **1054** includes backlight assembly **108** and/or display layer **110** as described with respect to FIG. **1**, backlight assembly **108** and/or LC display layer **206** as described with respect to FIG. **2**, backlight assembly **420** as described with respect to FIGS. **4**A and **4**B, display layer **602** and/or backlight assembly **650**A as described with respect to FIG. **6**A, display layer **602** and/or backlight assembly **650**B as described with respect to FIG. **6**B, display layer **702** and/or backlight assembly **750** as described with respect to FIG. **7**, display layer **802** and/or backlight assembly **850** as described with respect to FIG. **8**, and/or display layer **902** and/or backlight assembly **950** as described with respect to FIG. **9**, along with any components and/or subcomponents thereof. Input device(s) **1030** includes a touch screen **1032**, a microphone **1034**, a camera **1036**, a physical keyboard **1038**, and a trackball **1040**. Not all components of computing device **1002** shown in FIG. **10** are present in all embodiments, additional components not shown may be present, and any combination of the components may be present in a particular embodiment. These components of computing device **1002** are described as follows.

[0138] A single processor **1010** (e.g., central processing unit (CPU), microcontroller, a microprocessor, signal processor, ASIC (application specific integrated circuit), and/or other physical hardware processor circuit) or multiple processors **1010** may be present in computing device **1002** for performing such tasks as program execution, signal coding, data processing, input/output processing, power control, and/or other functions. Processor **1010** may be a single-core or multi-core processor, and each processor core may be single-threaded or multithreaded (to provide multiple threads of execution concurrently). Processor **1010** is configured to execute program code stored in a computer readable medium, such as program code of operating system **1012** and application programs **1014** stored in storage **1020**. Operating system **1012** controls the allocation and usage of the components of computing device **1002** and provides

support for one or more application programs **1014** (also referred to as "applications" or "apps"). Application programs **1014** may include common computing applications (e.g., e-mail applications, calendars, contact managers, web browsers, messaging applications), further computing applications (e.g., word processing applications, mapping applications, media player applications, productivity suite applications), one or more machine learning (ML) models, as well as applications related to the embodiments disclosed elsewhere herein.

[0139] Any component in computing device **1002** can communicate with any other component according to function, although not all connections are shown for ease of illustration. For instance, as shown in FIG. **10**, bus **1006** is a multiple signal line communication medium (e.g., conductive traces in silicon, metal traces along a motherboard, wires, etc.) that may be present to communicatively couple processor **1010** to various other components of computing device **1002**, although in other embodiments, an alternative bus, further buses, and/or one or more individual signal lines may be present to communicatively couple components. Bus **1006** represents one or more of any of several types of bus structures, including a memory bus or memory controller, a peripheral bus, an accelerated graphics port, and a processor or local bus using any of a variety of bus architectures.

[0140] Storage **1020** is physical storage that includes one or both of memory **1056** and storage device **1090**, which store operating system **1012**, application programs **1014**, and application data **1016** according to any distribution. Non-removable memory **1022** includes one or more of RAM (random access memory), ROM (read only memory), flash memory, a solid-state drive (SSD), a hard disk drive (e.g., a disk drive for reading from and writing to a hard disk), and/or other physical memory device type. Non-removable memory **1022** may include main memory and may be separate from or fabricated in a same integrated circuit as processor **1010**. As shown in FIG. **10**, non-removable memory **1022** stores firmware **1018**, which may be present to provide low-level control of hardware. Examples of firmware **1018** include BIOS (Basic Input/Output System, such as on personal computers) and boot firmware (e.g., on smart phones). Removable memory **1024** may be inserted into a receptacle of or otherwise coupled to computing device **1002** and can be removed by a user from computing device **1002**. Removable memory **1024** can include any suitable removable memory device type, including an SD (Secure Digital) card, a Subscriber Identity Module (SIM) card, which is well known in GSM (Global System for Mobile Communications) communication systems, and/or other removable physical memory device type. One or more of storage device **1090** may be present that are internal and/or external to a housing of computing device **1002** and may or may not be removable. Examples of storage device **1090** include a hard disk drive, a SSD, a thumb drive (e.g., a USB (Universal Serial Bus) flash drive), or other physical storage device.

[0141] One or more programs may be stored in storage **1020**. Such programs include operating system **1012**, one or more application programs **1014**, and other program modules and program data. Examples of such application programs may include, for example, computer program logic (e.g., computer program code/instructions) for implementing one or more of backlight controller **212**, display drivers **2140**, LC controller **226**, and/or image source **240**, along with any components and/or subcomponents thereof, as well as the flowcharts/flow diagrams (e.g., flowcharts **300** and/or **500**) described herein, including portions thereof, and/or further examples described herein.

[0142] Storage **1020** also stores data used and/or generated by operating system **1012** and application programs **1014** as application data **1016**. Examples of application data **1016** include web pages, text, images, tables, sound files, video data, and other data, which may also be sent to and/or received from one or more network servers or other devices via one or more wired or wireless networks. Storage **1020** can be used to store further data including a subscriber identifier, such as an International Mobile Subscriber Identity (IMSI), and an equipment identifier, such as an International Mobile Equipment Identifier (IMEI). Such identifiers can be transmitted to a network server to identify users and equipment.

[0143] A user may enter commands and information into computing device **1002** through one or more input devices **1030** and may receive information from computing device **1002** through one or more output devices **1050**. Input device(s) **1030** may include one or more of touch screen **1032**, microphone **1034**, camera **1036**, physical keyboard **1038** and/or trackball **1040** and output device(s) **1050** may include one or more of speaker **1052** and display **1054**. Each of input device(s) **1030** and output device(s) **1050** may be integral to computing device **1002** (e.g., built into a housing of computing device **1002**) or external to computing device **1002** (e.g., communicatively coupled wired or wirelessly to computing device **1002** via wired interface(s) **1080** and/or wireless modem(s) **1060**). Further input devices **1030** (not shown) can include a Natural User Interface (NUI), a pointing device (computer mouse), a joystick, a video game controller, a scanner, a touch pad, a stylus pen, a voice recognition system to receive voice input, a gesture recognition system to receive gesture input, or the like. Other possible output devices (not shown) can include piezoelectric or other haptic output devices. Some devices can serve more than one input/output function. For instance, display **1054** may display information, as well as operating as touch screen **1032** by receiving user commands and/or other information (e.g., by touch, finger gestures, virtual keyboard, etc.) as a user interface. Any number of each type of input device(s) **1030** and output device(s) **1050** may be present, including multiple microphones **1034**, multiple cameras **1036**, multiple speakers **1052**, and/or multiple displays **1054**.

[0144] One or more wireless modems **1060** can be coupled to antenna(s) (not shown) of computing device **1002** and can support two-way communications between processor **1010** and devices external to computing device **1002** through network **1004**, as would be understood to persons skilled in the relevant art(s). Wireless modem **1060** is shown generically and can include a cellular modem **1066** for communicating with one or more cellular networks, such as a GSM network for data and voice communications within a single cellular network, between cellular networks, or between the mobile device and a public switched telephone network (PSTN). Wireless modem **1060** may also or alternatively include other radio-based modem types, such as a Bluetooth modem **1064** (also referred to as a "Bluetooth device") and/or Wi-Fi **1062** modem (also referred to as an "wireless adaptor"). Wi-Fi modem **1062** is configured to communicate with an access point or other remote Wi-Fi-capable device

according to one or more of the wireless network protocols based on the IEEE (Institute of Electrical and Electronics Engineers) 802.11 family of standards, commonly used for local area networking of devices and Internet access. Bluetooth modem **1064** is configured to communicate with another Bluetooth-capable device according to the Bluetooth short-range wireless technology standard(s) such as IEEE 802.15.1 and/or managed by the Bluetooth Special Interest Group (SIG).

[0145] Computing device **1002** can further include power supply **1082**, LI receiver **1084**, accelerometer **1086**, and/or one or more wired interfaces **1080**. Example wired interfaces **1080** include a USB port, IEEE 1394 (FireWire) port, a RS-232 port, an HDMI (High-Definition Multimedia Interface) port (e.g., for connection to an external display), a DisplayPort port (e.g., for connection to an external display), an audio port, an Ethernet port, and/or an Apple® Lightning® port, the purposes and functions of each of which are well known to persons skilled in the relevant art(s). Wired interface(s) **1080** of computing device **1002** provide for wired connections between computing device **1002** and network **1004**, or between computing device **1002** and one or more devices/peripherals when such devices/peripherals are external to computing device **1002** (e.g., a pointing device, display **1054**, speaker **1052**, camera **1036**, physical keyboard **1038**, etc.). Power supply **1082** is configured to supply power to each of the components of computing device **1002** and may receive power from a battery internal to computing device **1002**, and/or from a power cord plugged into a power port of computing device **1002** (e.g., a USB port, an A/C power port). LI receiver **1084** may be used for location determination of computing device **1002** and may include a satellite navigation receiver such as a Global Positioning System (GPS) receiver or may include other type of location determiner configured to determine location of computing device **1002** based on received information (e.g., using cell tower triangulation, etc.). Accelerometer **1086** may be present to determine an orientation of computing device **1002**.

[0146] Note that the illustrated components of computing device **1002** are not required or all-inclusive, and fewer or greater numbers of components may be present as would be recognized by one skilled in the art. For example, computing device **1002** may also include one or more of a gyroscope, barometer, proximity sensor, ambient light sensor, digital compass, etc. Processor **1010** and memory **1056** may be co-located in a same semiconductor device package, such as being included together in an integrated circuit chip, FPGA, or system-on-chip (SOC), optionally along with further components of computing device **1002**.

[0147] In embodiments, computing device **1002** is configured to implement any of the above-described features of flowcharts herein. Computer program logic for performing any of the operations, steps, and/or functions described herein may be stored in storage **1020** and executed by processor **1010**.

[0148] In some embodiments, server infrastructure **1070** may be present in computing environment **1000** and may be communicatively coupled with computing device **1002** via network **1004**. Server infrastructure **1070**, when present, may be a network-accessible server set (e.g., a cloud computing platform). As shown in FIG. **10**, server infrastructure **1070** includes clusters **1072**. Each of clusters **1072** may comprise a group of one or more compute nodes and/or a group of one or more storage nodes. For example, as shown in FIG. **10**, cluster **1072** includes nodes **1074**. Each of nodes **1074** is accessible via network **1004** (e.g., in a "cloud computing platform" or "cloud-based" embodiment) to build, deploy, and manage applications and services. Any of nodes **1074** may be a storage node that comprises a plurality of physical storage disks, SSDs, and/or other physical storage devices that are accessible via network **1004** and are configured to store data associated with the applications and services managed by nodes **1074**. For example, as shown in FIG. **10**, nodes **1074** may store application data **1078**.

[0149] Each of nodes **1074** may, as a compute node, comprise one or more server computers, server systems, and/or computing devices. For instance, a node **1074** may include one or more of the components of computing device **1002** disclosed herein. Each of nodes **1074** may be configured to execute one or more software applications (or "applications") and/or services and/or manage hardware resources (e.g., processors, memory, etc.), which may be utilized by users (e.g., customers) of the network-accessible server set. For example, as shown in FIG. **10**, nodes **1074** may operate application programs **1076**. In an implementation, a node of nodes **1074** may operate or comprise one or more virtual machines, with each virtual machine emulating a system architecture (e.g., an operating system), in an isolated manner, upon which applications such as application programs **1076** may be executed.

[0150] In an embodiment, one or more of clusters **1072** may be co-located (e.g., housed in one or more nearby buildings with associated components such as backup power supplies, redundant data communications, environmental controls, etc.) to form a datacenter, or may be arranged in other manners. Accordingly, in an embodiment, one or more of clusters **1072** may be a datacenter in a distributed collection of datacenters. In embodiments, exemplary computing environment **1000** comprises part of a cloud-based platform such as Amazon Web Services® of Amazon Web Services, Inc., or Google Cloud Platform™ of Google LLC, although these are only examples and are not intended to be limiting.

[0151] In an embodiment, computing device **1002** may access application programs **1076** for execution in any manner, such as by a client application and/or a browser at computing device **1002**. Example browsers include Microsoft Edge® by Microsoft Corp. of Redmond, Washington, Mozilla Firefox®, by Mozilla Corp. of Mountain View, California, Safari®, by Apple Inc. of Cupertino, California, and Google® Chrome by Google LLC of Mountain View, California.

[0152] For purposes of network (e.g., cloud) backup and data security, computing device **1002** may additionally and/or alternatively synchronize copies of application programs **1014** and/or application data **1016** to be stored at network-based server infrastructure **1070** as application programs **1076** and/or application data **1078**. For instance, operating system **1012** and/or application programs **1014** may include a file hosting service client, such as Microsoft® OneDrive® by Microsoft Corporation, Amazon Simple Storage Service (Amazon S3)® by Amazon Web Services, Inc., Dropbox® by Dropbox, Inc., Google Drive™ by Google LLC, etc., configured to synchronize applications and/or data stored in storage **1020** at network-based server infrastructure **1070**.

[0153] In some embodiments, on-premises servers **1092** may be present in computing environment **1000** and may be

communicatively coupled with computing device **1002** via network **1004**. On-premises servers **1092**, when present, are hosted within an organization's infrastructure and, in many cases, physically onsite of a facility of that organization. On-premises servers **1092** are controlled, administered, and maintained by IT (Information Technology) personnel of the organization or an IT partner to the organization. Application data **1098** may be shared by on-premises servers **1092** between computing devices of the organization, including computing device **1002** (when part of an organization) through a local network of the organization, and/or through further networks accessible to the organization (including the Internet). Furthermore, on-premises servers **1092** may serve applications such as application programs **1096** to the computing devices of the organization, including computing device **1002**. Accordingly, on-premises servers **1092** may include storage **1094** (which includes one or more physical storage devices such as storage disks and/or SSDs) for storage of application programs **1096** and application data **1098** and may include one or more processors for execution of application programs **1096**. Still further, computing device **1002** may be configured to synchronize copies of application programs **1014** and/or application data **1016** for backup storage at on-premises servers **1092** as application programs **1096** and/or application data **1098**.

[0154] Embodiments described herein may be implemented in one or more of computing device **1002**, network-based server infrastructure **1070**, and on-premises servers **1092**. For example, in some embodiments, computing device **1002** may be used to implement systems, clients, or devices, or components/subcomponents thereof, disclosed elsewhere herein. In other embodiments, a combination of computing device **1002**, network-based server infrastructure **1070**, and/or on-premises servers **1092** may be used to implement the systems, clients, or devices, or components/subcomponents thereof, disclosed elsewhere herein.

[0155] As used herein, the terms "computer program medium," "computer-readable medium," and "computer-readable storage medium," etc., are used to refer to physical hardware media. Examples of such physical hardware media include any hard disk, optical disk, SSD, other physical hardware media such as RAMs, ROMs, flash memory, digital video disks, zip disks, MEMs (microelectronic machine) memory, nanotechnology-based storage devices, and further types of physical/tangible hardware storage media of storage **1020**. Such computer-readable media and/or storage media are distinguished from and non-overlapping with communication media and propagating signals (do not include communication media and propagating signals). Communication media embodies computer-readable instructions, data structures, program modules or other data in a modulated data signal such as a carrier wave. The term "modulated data signal" means a signal that has one or more of its characteristics set or changed in such a manner as to encode information in the signal. By way of example, and not limitation, communication media includes wireless media such as acoustic, RF, infrared and other wireless media, as well as wired media. Embodiments are also directed to such communication media that are separate and non-overlapping with embodiments directed to computer-readable storage media.

[0156] As noted above, computer programs and modules (including application programs **1014**) may be stored in storage **1020**. Such computer programs may also be received via wired interface(s) **1080** and/or wireless modem(s) **1060** over network **1004**. Such computer programs, when executed or loaded by an application, enable computing device **1002** to implement features of embodiments discussed herein. Accordingly, such computer programs represent controllers of the computing device **1002**.

[0157] Embodiments are also directed to computer program products comprising computer code or instructions stored on any computer-readable medium or computer-readable storage medium. Such computer program products include the physical storage of storage **1020** as well as further physical storage types.

VII. Additional Exemplary Embodiments

[0158] A display system is described herein. The display system comprises a backlight assembly and a display layer. The backlight assembly comprises a transparent waveguide layer having a first surface, a plurality of first light sources arranged along an edge of the transparent waveguide layer, each of the first light sources configured to transmit light into the waveguide layer through the edge, and an array layer coupled to the first surface of the transparent waveguide layer. The array layer comprises a first reflective layer and a plurality of second light sources. The first reflective layer is configured to reflect the light transmitted by the plurality of first light sources into the waveguide layer through the first surface. The plurality of second light sources arranged between the first surface and the first reflective layer, each of the second light sources configured to transmit light into the waveguide layer through the first surface. The display layer is disposed proximate to the backlight assembly. The display layer is configured to selectively filter the light emitted from the backlight assembly.

[0159] In an implementation of the foregoing display system, the plurality of second light sources is mounted to a transparent sublayer and oriented toward the first reflective layer and away from the first surface; and to transmit light into the waveguide layer, the plurality of second light sources is configured to transmit light toward the first reflective layer to cause the first reflective layer to reflect the light transmitted by the plurality of second light sources into the waveguide layer through the first surface.

[0160] In an implementation of the foregoing display system, the backlight assembly further comprises a second reflective layer arranged between the first surface and the array layer, the second reflective layer configured to reflect a portion of the light transmitted by the plurality of first light sources into the waveguide layer through the first surface.

[0161] In an implementation of the foregoing display system, the second reflective layer comprises: a color conversion sublayer configured to convert the light transmitted by the plurality of second light sources from a first color to a second color; and a color reflective sublayer configured to reflect the portion of the light transmitted by the plurality of first light sources into the waveguide layer through the first surface.

[0162] In an implementation of the foregoing display system, the second reflective layer is further configured to reflect a portion of the light transmitted by the plurality of second light sources toward the first reflective layer.

[0163] In an implementation of the foregoing display system, the first reflective layer is a specular reflective layer.

[0164] In an implementation of the foregoing display system, the display system further comprises a backlight

controller configured to: receive image data; determine, based on the image data, an average luminance level of a display area of the display layer is below a threshold; and responsive to the determination, illuminate a portion of the plurality of first light sources.

[0165] In an implementation of the foregoing display system, responsive to the determination, the backlight controller is further configured to maintain the plurality of second light sources in an off state.

[0166] In an implementation of the foregoing display system, the backlight controller is further configured to: determine, based on the image data, an average luminance level of a first zone of the display area is below the threshold and an average luminance level of a second zone of the display area is above the threshold, and illuminate a portion of the plurality of second light sources corresponding to the second zone. The portion of the plurality of first light sources corresponds to the first zone.

[0167] In an implementation of the foregoing display system, the display layer is a liquid crystal display layer.

[0168] A backlight assembly for a device is described. The backlight assembly comprises a transparent waveguide layer having a first surface, a plurality of first light sources, an array layer, and a first reflective layer. The plurality of first light sources is arranged along an edge of the transparent waveguide layer. Each of the first light sources is configured to transmit light into the waveguide layer through the edge. The array layer comprises a plurality of second light sources, each of the second light sources configured to transmit light into the waveguide layer through the first surface. The first reflective layer is arranged between the first surface of the transparent waveguide layer and the array layer. The first reflective layer is configured to: reflect a portion of the light transmitted by the plurality of first light sources into the waveguide layer through the first surface, and reflect a portion of the light transmitted by the plurality of second light sources away from the first surface.

[0169] In an implementation of the foregoing backlight assembly, the array layer further comprises a second reflective layer, the plurality of second light sources arranged between the first reflective layer and the second reflective layer, the second reflective layer configured to reflect the light transmitted by the plurality of first light sources into the waveguide layer through the first surface.

[0170] In an implementation of the foregoing backlight assembly, the plurality of second light sources is mounted to a transparent sublayer and are oriented toward the second reflective layer and away from the first surface. To transmit light into the waveguide layer, the plurality of second light sources is configured to transmit light toward the first reflective layer to cause the first reflective layer to reflect the light transmitted by the plurality of second light sources into the waveguide layer through the first surface.

[0171] In an implementation of the foregoing backlight assembly, the first reflective layer is a specular reflective layer.

[0172] Another backlight assembly for a device is described. In this implementation, the backlight assembly comprises a transparent waveguide layer having a first surface, a plurality of first light sources, and an array layer. The plurality of first light sources is arranged along an edge of the transparent waveguide layer, each of the first light sources configured to transmit light into the waveguide layer through the edge. The array layer is coupled to the first surface of the transparent waveguide layer. The array layer comprises a first reflective layer and a plurality of second light sources. The first reflective layer is configured to reflect the light transmitted by the plurality of first light sources into the waveguide layer through the first surface. The plurality of second light sources is arranged between the first surface and the first reflective layer, each of the second light sources configured to transmit light into the waveguide layer through the first surface.

[0173] In an implementation of the foregoing another backlight assembly, the plurality of second light sources is mounted to a transparent sublayer and oriented toward the first reflective layer and away from the first surface; and to transmit light into the waveguide layer, the plurality of second light sources is configured to transmit light toward the first reflective layer to cause the first reflective layer to reflect the light transmitted by the plurality of second light sources into the waveguide layer through the first surface.

[0174] In an implementation of the foregoing another backlight assembly, the backlight assembly further comprises a second reflective layer arranged between the first surface and the array layer, the second reflective layer configured to reflect a portion of the light transmitted by the plurality of first light sources into the waveguide layer through the first surface.

[0175] In an implementation of the foregoing another backlight assembly, the second reflective layer comprises: a color conversion sublayer configured to convert the light transmitted by the plurality of second light sources from a first color to a second color; and a color reflective sublayer configured to reflect the portion of the light transmitted by the plurality of first light sources into the waveguide layer through the first surface.

[0176] In an implementation of the foregoing another backlight assembly, the second reflective layer is further configured to reflect a portion of the light transmitted by the plurality of second light sources toward the first reflective layer.

[0177] In an implementation of the foregoing another backlight assembly, the first reflective layer is a specular reflective layer.

VIII. Conclusion

[0178] References in the specification to "one embodiment," "an embodiment," "an example embodiment," etc., indicate that the embodiment described may include a particular feature, structure, or characteristic, but every embodiment may not necessarily include the particular feature, structure, or characteristic. Moreover, such phrases are not necessarily referring to the same embodiment. Further, when a particular feature, structure, or characteristic is described in connection with an embodiment, it is submitted that it is within the knowledge of one skilled in the art to affect such feature, structure, or characteristic in connection with other embodiments whether or not explicitly described.

[0179] In the discussion, unless otherwise stated, adjectives modifying a condition or relationship characteristic of a feature or features of an implementation of the disclosure, should be understood to mean that the condition or characteristic is defined to within tolerances that are acceptable for operation of the implementation for an application for which it is intended. Furthermore, if the performance of an operation is described herein as being "in response to" one or more factors, it is to be understood that the one or more

factors may be regarded as a sole contributing factor for causing the operation to occur or a contributing factor along with one or more additional factors for causing the operation to occur, and that the operation may occur at any time upon or after establishment of the one or more factors. Still further, where "based on" is used to indicate an effect being a result of an indicated cause, it is to be understood that the effect is not required to only result from the indicated cause, but that any number of possible additional causes may also contribute to the effect. Thus, as used herein, the term "based on" should be understood to be equivalent to the term "based at least on."

[0180] Numerous example embodiments have been described above. Any section/subsection headings provided herein are not intended to be limiting. Embodiments are described throughout this document, and any type of embodiment may be included under any section/subsection. Furthermore, embodiments disclosed in any section/subsection may be combined with any other embodiments described in the same section/subsection and/or a different section/subsection in any manner.

[0181] Furthermore, example embodiments have been described above with respect to one or more running examples. Such running examples describe one or more particular implementations of the example embodiments; however, embodiments described herein are not limited to these particular implementations.

[0182] Furthermore, several example cross-sectional and top views of backlight assemblies have been shown. While only a few edge and/or array light sources are illustrated in each of these example views, implementations of the described embodiments may utilize any number greater than or less than the number of light sources shown. Further still, while particular arrangements of layers within a backlight assembly have been shown, it is also considered herein that layers may be arranged in different orders, some layers may be omitted entirely, and/or some layers may be combined into a single layer. Also, while example pyramid sheets, diffusion layers, and prism sheets have been described, it is also contemplated herein that other sheets and/or layers may be used for scattering and/or otherwise diffusing light through a backlight assembly, as would be understood by a person ordinarily skilled in the relevant art(s) having benefit of this disclosure. For example, pyramid sheets located between a waveguide layer and an array layer in one non-limiting example may be replaced with prism sheets.

[0183] Moreover, according to the described embodiments and techniques, any components of systems, user devices, display systems, display devices, backlight assemblies, display layers, and/or their functions may be caused to be activated for operation/performance thereof based on other operations, functions, actions, and/or the like, including initialization, completion, and/or performance of the operations, functions, actions, and/or the like.

[0184] In some example embodiments, one or more of the operations of the flowcharts described herein may not be performed. Moreover, operations in addition to or in lieu of the operations of the flowcharts described herein may be performed. Further, in some example embodiments, one or more of the operations of the flowcharts described herein may be performed out of order, in an alternate sequence, or partially (or completely) concurrently with each other or with other operations.

[0185] The embodiments described herein and/or any further systems, sub-systems, devices and/or components disclosed herein may be implemented in hardware (e.g., hardware logic/electrical circuitry), or any combination of hardware with software (computer program code configured to be executed in one or more processors or processing devices) and/or firmware.

[0186] While various embodiments have been described above, it should be understood that they have been presented by way of example only, and not limitation. It will be apparent to persons skilled in the relevant art that various changes in form and detail can be made therein without departing from the spirit and scope of the embodiments. Thus, the breadth and scope of the embodiments should not be limited by any of the above-described example embodiments, but should be defined only in accordance with the following claims and their equivalents.

What is claimed is:

1. A system comprising:

a circuit-implemented backlight controller that:

receives image data;

analyze the image data to determine a first average luminance level of a first portion of the image data and a second average luminance level of a second portion of the image data;

determine the first average luminance level is above a first threshold and the second average luminance level is below the second threshold; and

cause a backlight driver to:

selectively cause a first portion of array lights of a backlight assembly to illuminate a first zone of a display area displaying the first portion of the image data,

selectively cause a first portion of edge lights of the backlight assembly to illuminate a second zone of the display area displaying the second portion of the image data, and

prevent a second portion of the array lights from illuminating the second zone.

2. The system of claim **1**, wherein to cause the backlight driver to prevent the second portion of the array lights from illuminating the second zone, the backlight controller:

disables an array driver of the backlight driver configured to control the second portion of the array lights.

3. The system of claim **1**, wherein the backlight controller further:

determines a power saving mode is active; and

causes the backlight driver to prevent the second portion of the array light sources from illuminating the second zone based at least on the power saving mode being active and the second average illuminance level being below the first threshold.

4. The system of claim **1**, wherein the backlight controller further:

determines a level of contrast of the second portion of the image data is below a second threshold; and

causes the backlight driver to prevent the second portion of the array light sources from illuminating the second zone based at least on the level of contrast being below the second threshold and the second average illuminance level being below the first threshold.

5. The system of claim **1**, wherein the backlight controller further:

receives ambient light data from an ambient light sensor, the ambient light data indicating a level of ambient luminance of a room;

determines the level of ambient luminance is above a second threshold; and

causes the backlight driver to prevent the second portion of the array light sources from illuminating the second zone based at least on the level of ambient luminance being above the second threshold and the second average illuminance level being below the first threshold.

6. The system of claim **1**, wherein the backlight controller further:

determines the first portion of the image data comprises a flat field; and

causes the backlight driver to cause a second portion of the edge light sources to illuminate the first zone.

7. The system of claim **1**, further comprising a display device comprising:

the backlight assembly; and

a display layer coupled to the backlight assembly.

8. The system of claim **1**, wherein the backlight driver comprises:

a string backlight driver that selectively causes the first portion of edge lights to illuminate; and

an array backlight driver that selectively causes the first portion of array lights to illuminate and prevents the second portion of array lights from illuminating.

9. A circuit-implemented backlight controller that:

receives image data;

analyze the image data to determine a first average luminance level of a first portion of the image data and a second average luminance level of a second portion of the image data;

determine the first average luminance level is above a first threshold and the second average luminance level is below the second threshold; and

cause a backlight driver to:

selectively cause a first portion of array lights of a backlight assembly to illuminate a first zone of a display area displaying the first portion of the image data,

selectively cause a first portion of edge lights of the backlight assembly to illuminate a second zone of the display area displaying the second portion of the image data, and

prevent a second portion of the array lights from illuminating the second zone.

10. The circuit-implemented backlight controller of claim **9**, wherein to cause the backlight driver to prevent the second portion of the array lights from illuminating the second zone, the backlight controller:

disables an array driver of the backlight driver configured to control the second portion of the array lights.

11. The circuit-implemented backlight controller of claim **9**, wherein the backlight controller further:

determines a power saving mode is active; and

causes the backlight driver to prevent the second portion of the array light sources from illuminating the second zone based at least on the power saving mode being active and the second average illuminance level being below the first threshold.

12. The circuit-implemented backlight controller of claim **9**, wherein the backlight controller further:

determines a level of contrast of the second portion of the image data is below a second threshold; and

causes the backlight driver to prevent the second portion of the array light sources from illuminating the second zone based at least on the level of contrast being below the second threshold and the second average illuminance level being below the first threshold.

13. The circuit-implemented backlight controller of claim **9**, wherein the backlight controller further:

receives ambient light data from an ambient light sensor, the ambient light data indicating a level of ambient luminance of a room;

determines the level of ambient luminance is above a second threshold; and

causes the backlight driver to prevent the second portion of the array light sources from illuminating the second zone based at least on the level of ambient luminance being above the second threshold and the second average illuminance level being below the first threshold.

14. The circuit-implemented backlight controller of claim **9**, wherein the backlight controller further:

determines the first portion of the image data comprises a flat field; and

causes the backlight driver to cause a second portion of the edge light sources to illuminate the first zone.

15. A method performed by a backlight controller comprising:

receiving image data;

analyzing the image data to determine a first average luminance level of a first portion of the image data and a second average luminance level of a second portion of the image data;

determining the first average luminance level is above a first threshold and the second average luminance level is below the second threshold; and

causing a backlight driver to:

selectively cause a first portion of array lights of a backlight assembly to illuminate a first zone of a display area displaying the first portion of the image data,

selectively cause a first portion of edge lights of the backlight assembly to illuminate a second zone of the display area displaying the second portion of the image data, and

prevent a second portion of the array lights from illuminating the second zone.

16. The method of claim **15**, wherein said causing the backlight driver to prevent the second portion of the array lights from illuminating the second zone comprises:

disabling an array driver of the backlight driver configured to control the second portion of the array lights.

17. The method of claim **15**, further comprising:

determining a power saving mode is active; and

causing the backlight driver to prevent the second portion of the array light sources from illuminating the second zone based at least on the power saving mode being active and the second average illuminance level being below the first threshold.

18. The method of claim **15**, further comprising:

determining a level of contrast of the second portion of the image data is below a second threshold; and

causing the backlight driver to prevent the second portion of the array light sources from illuminating the second zone based at least on the level of contrast being below

the second threshold and the second average illuminance level being below the first threshold.

19. The method of claim **15**, further comprising:

receiving ambient light data from an ambient light sensor, the ambient light data indicating a level of ambient luminance of a room;

determining the level of ambient luminance is above a second threshold; and

causing the backlight driver to prevent the second portion of the array light sources from illuminating the second zone based at least on the level of ambient luminance being above the second threshold and the second average illuminance level being below the first threshold.

20. The method of claim **15**, further comprising:

determining the first portion of the image data comprises a flat field; and

causing the backlight driver to cause a second portion of the edge light sources to illuminate the first zone.

* * * * *