US012404732B2

(12) **United States Patent**
Kibbe et al.

(10) **Patent No.: US 12,404,732 B2**
(45) **Date of Patent: *Sep. 2, 2025**

(54) **TRAPDOOR-STYLE DRILLING MUD SCREEN SYSTEM AND METHODS THEREOF**

(71) Applicant: **Black Diamond Oilfield Rentals LLC**, Houston, TX (US)

(72) Inventors: **Charles G. Kibbe**, New Iberia, LA (US); **Ross J. Robin**, New Iberia, LA (US)

(73) Assignee: **Black Diamond Oilfield Rentals LLC**, Houston, TX (US)

(*) Notice: Subject to any disclaimer, the term of this patent is extended or adjusted under 35 U.S.C. 154(b) by 0 days.

This patent is subject to a terminal disclaimer.

(21) Appl. No.: **17/984,193**

(22) Filed: **Nov. 9, 2022**

(65) **Prior Publication Data**

US 2023/0063617 A1 Mar. 2, 2023

Related U.S. Application Data

(63) Continuation-in-part of application No. 17/126,415, filed on Dec. 18, 2020, now Pat. No. 11,802,453,
(Continued)

(51) **Int. Cl.**
E21B 21/06 (2006.01)
E21B 19/16 (2006.01)
(Continued)

(52) **U.S. Cl.**
CPC ***E21B 21/065*** (2013.01); ***E21B 19/16*** (2013.01); ***E21B 21/08*** (2013.01); ***E21B 21/106*** (2013.01)

(58) **Field of Classification Search**
CPC E21B 21/08; E21B 19/16; E21B 21/065; E21B 21/10; E21B 21/12; E21B 21/106
See application file for complete search history.

(56) **References Cited**

U.S. PATENT DOCUMENTS

4,226,726 A 10/1980 Rehm
4,421,170 A 12/1983 Swift et al.
(Continued)

OTHER PUBLICATIONS

Final Office Action on U.S. Appl. No. 15/959,070 dated Aug. 26, 2020, 14 pages.
(Continued)

Primary Examiner — Blake Michener
(74) *Attorney, Agent, or Firm* — Foley & Lardner LLP

(57) **ABSTRACT**

A trapdoor-style drilling mud screen system, comprising a first body having a first portion, a second portion and a third portion, a first drilling mud inlet at a first end of the first portion of the first body, a first drilling mud outlet at a second end of the third portion of the first body, a rotating trapdoor subassembly, wherein the rotating trapdoor subassembly is disposed within the second portion of the first body, wherein the first portion of the first body is fluidly connected to a first end of the rotating subassembly, and wherein a second end of the rotating subassembly is fluidly connected to the third portion of the first body, a pivot subassembly, wherein the pivot subassembly is disposed through the rotating trapdoor subassembly and through the second portion of the first body; and a drilling mud screen, wherein the drilling mud screen is disposed within the rotating trapdoor subassembly between the first drilling mud inlet and the first drilling mud outlet. Methods of installing and using the drilling mud screen system are also disclosed.

57 Claims, 87 Drawing Sheets

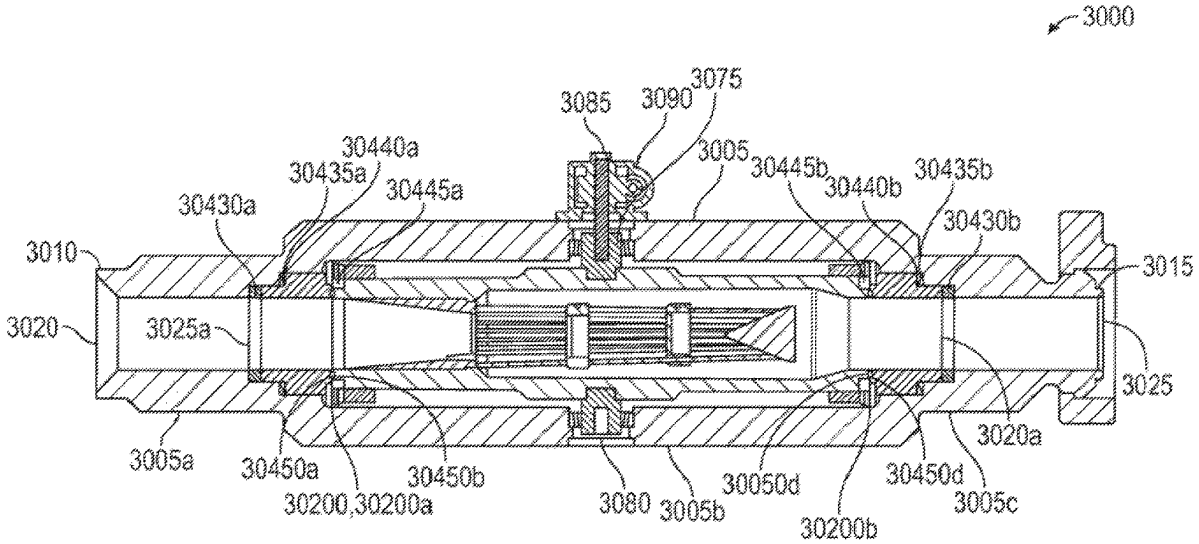

Related U.S. Application Data

which is a continuation-in-part of application No. 15/959,070, filed on Apr. 20, 2018, now Pat. No. 11,028,656.

(60) Provisional application No. 62/598,521, filed on Dec. 14, 2017, provisional application No. 62/491,700, filed on Apr. 28, 2017.

(51) **Int. Cl.**
E21B 21/08 (2006.01)
E21B 21/10 (2006.01)

(56) **References Cited**

U.S. PATENT DOCUMENTS

6,263,969	B1	7/2001	Stoesz et al.
6,517,125	B2	2/2003	Brisco
6,598,685	B1	7/2003	Mashburn
6,782,952	B2	8/2004	Garay et al.
6,976,546	B2	12/2005	Herst
7,243,740	B2	7/2007	Frith
7,913,760	B2	3/2011	Robichaux et al.
8,127,867	B1	3/2012	Droke
8,381,808	B2	2/2013	Rogers et al.
8,695,715	B2	4/2014	Rogers et al.
9,151,124	B2	10/2015	Iblings et al.
9,353,605	B2	5/2016	Hailey et al.
9,598,919	B1	3/2017	Cantrell et al.
9,624,727	B1	4/2017	Hutton
9,677,361	B2	6/2017	Patterson
10,280,719	B1	5/2019	O'Neal
10,323,484	B2	6/2019	Liess
10,415,352	B2	9/2019	Thomas et al.
10,557,323	B2	2/2020	Pope
11,802,453	B2 *	10/2023	Comeaux E21B 21/10
2003/0136584	A1	7/2003	Risher et al.
2003/0150616	A1	8/2003	Mashburn
2004/0079551	A1	4/2004	Herst
2006/0065443	A1	3/2006	Hall et al.
2008/0087433	A1	4/2008	Mashburn et al.
2013/0306304	A1	11/2013	Cherewyk et al.
2015/0101804	A1	4/2015	Vu
2015/0198016	A1	7/2015	Langlais
2015/0267511	A1	9/2015	Patterson
2016/0327191	A1	11/2016	Walker et al.
2017/0058644	A1	3/2017	Andreychuk et al.
2018/0128067	A1	5/2018	Gao et al.
2018/0135371	A1	5/2018	Cherewyk
2018/0258721	A1	9/2018	Pawar et al.
2018/0306000	A1	10/2018	Deboer
2018/0313178	A1	11/2018	Biggerstaff et al.
2019/0085663	A1	3/2019	Thomas et al.
2019/0106954	A1	4/2019	Brown-Kerr et al.
2019/0112884	A1	4/2019	Biggerstaff et al.
2019/0128454	A1	5/2019	Chirko et al.
2019/0264546	A1	8/2019	O'Neal

OTHER PUBLICATIONS

Final Office Action on U.S. Appl. No. 16/230,597 dated Jun. 2, 2020, 8 pages.
International Search Report and Written Opinion corresponding to PCT/US2018/029620, dated Aug. 30, 2018, 13 pages.
International Search Report and Written Opinion corresponding to PCT/US2020/059416, dated Feb. 4, 2021, 12 pages.
International Search Report and Written Opinion of PCT/US2020/059134, dated Mar. 10, 2021, 24 pages.
International Search Report and Written Opinion on PCT/US2020/058868 dated Mar. 10, 2021, 19 pages.
Non-Final Office Action on U.S. Appl. No. 15/959,070 dated Jun. 23, 2020, 18 pages.
Non-Final Office Action on U.S. Appl. No. 16/230,597 dated Nov. 17, 2020, 8 pages.
Non-Final Office Action on U.S. Appl. No. 17/010,678 dated Apr. 4, 2022, 13 pages.
Non-Final Office Action on U.S. Appl. No. 17/083,201 dated Jul. 28, 2022, 16 pages.
Non-Final Office Action on U.S. Appl. No. 17/123,401 dated Aug. 12, 2022, 25 pages.
Non-Final Office Action on U.S. Appl. No. 15/959,070 dated Apr. 20, 2020 (16 pages).
Non-Final Office Action on U.S. Appl. No. 16/230,597 dated Apr. 28, 2020 (7 pages).
Notice of Allowance on U.S. Appl. No. 15/959,070 dated Jan. 6, 2021, 6 pages.
Notice of Allowance on U.S. Appl. No. 16/230,597 dated Mar. 9, 2021, 5 pages.
US Office Action on U.S. Appl. No. 16/677,084 dated Mar. 23, 2021, 14 pages.

* cited by examiner

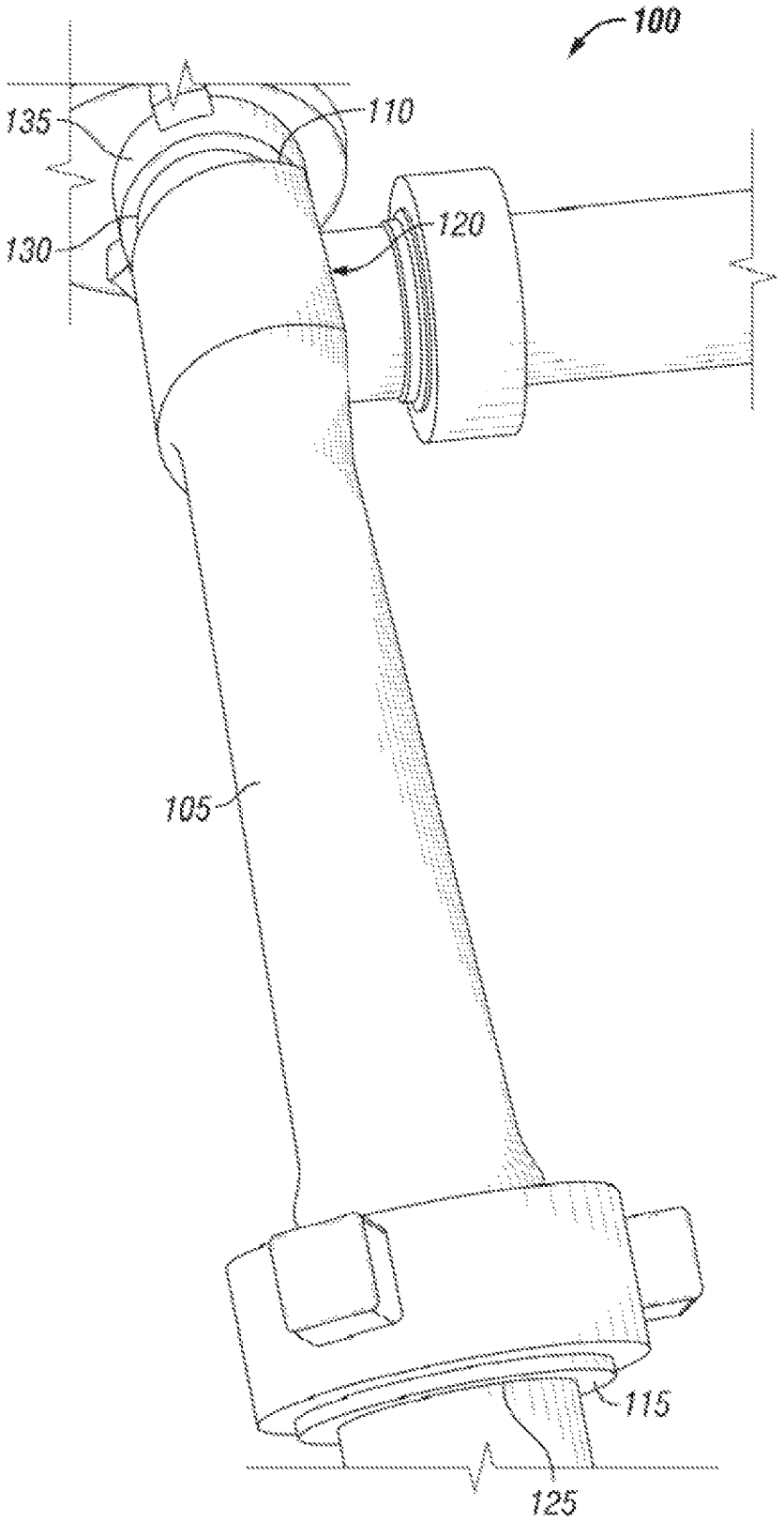

FIG. 1

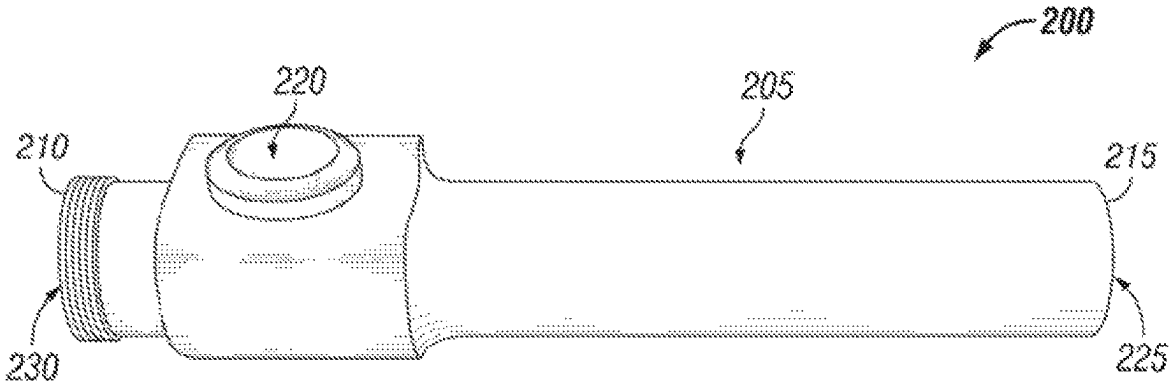

FIG. 2

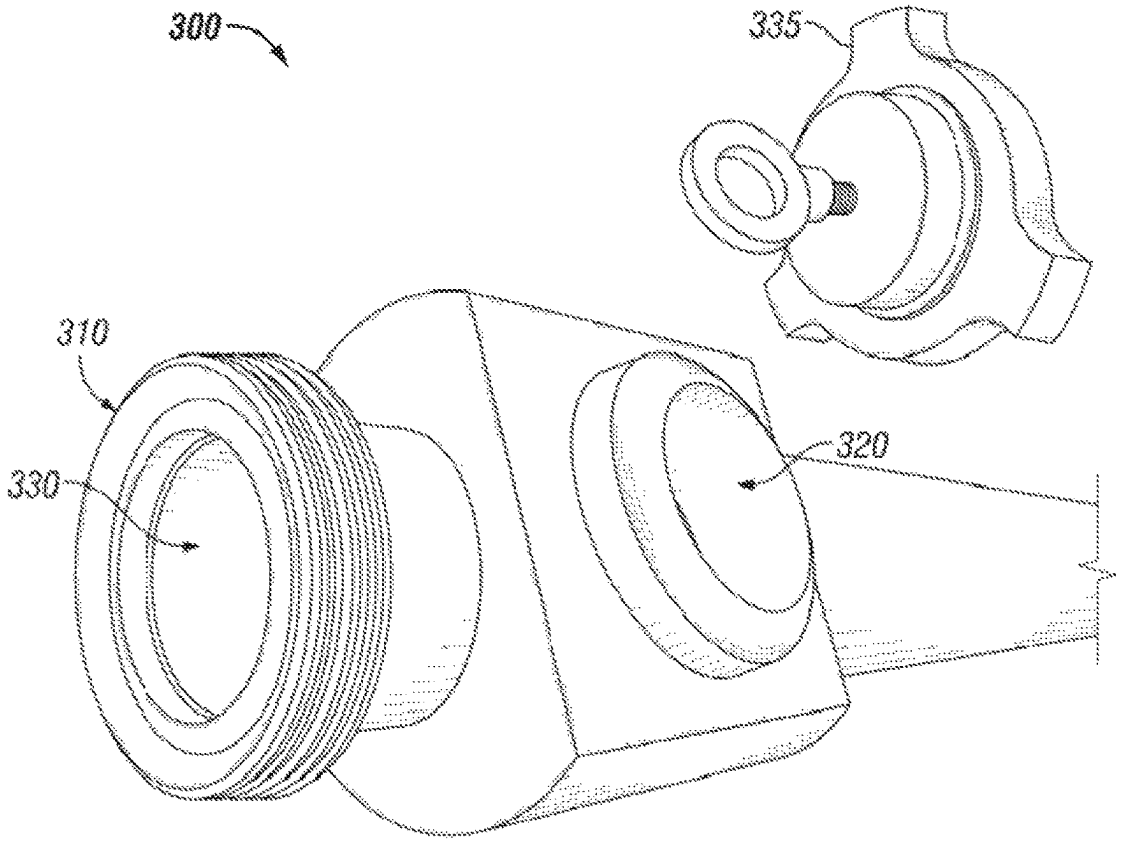

FIG. 3A

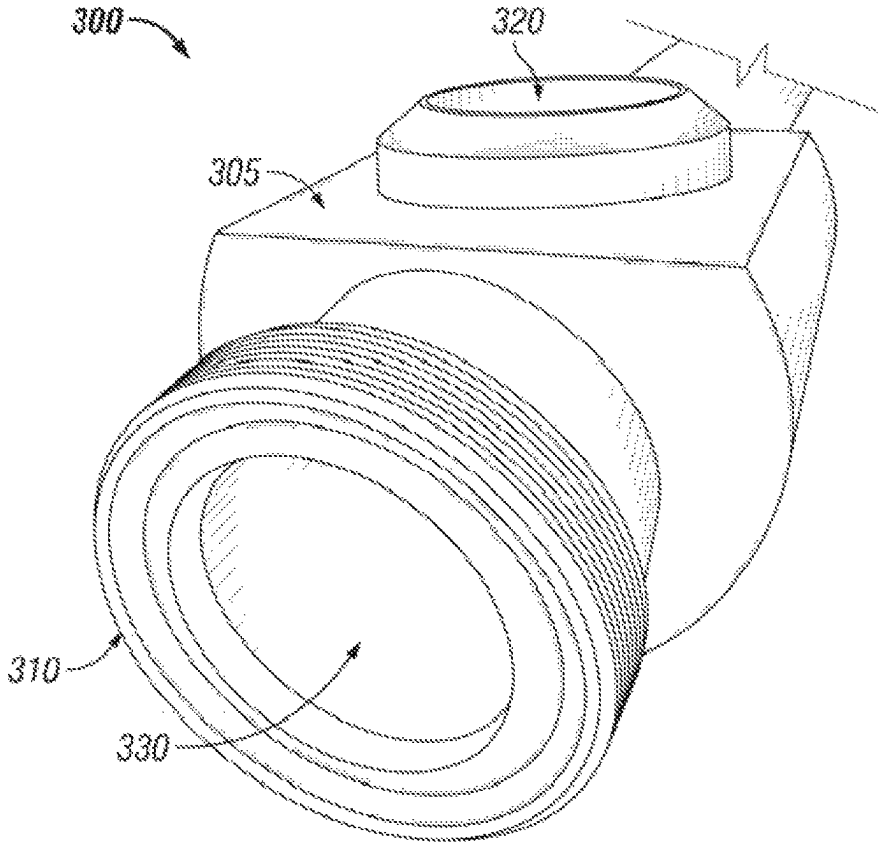

FIG. 3B

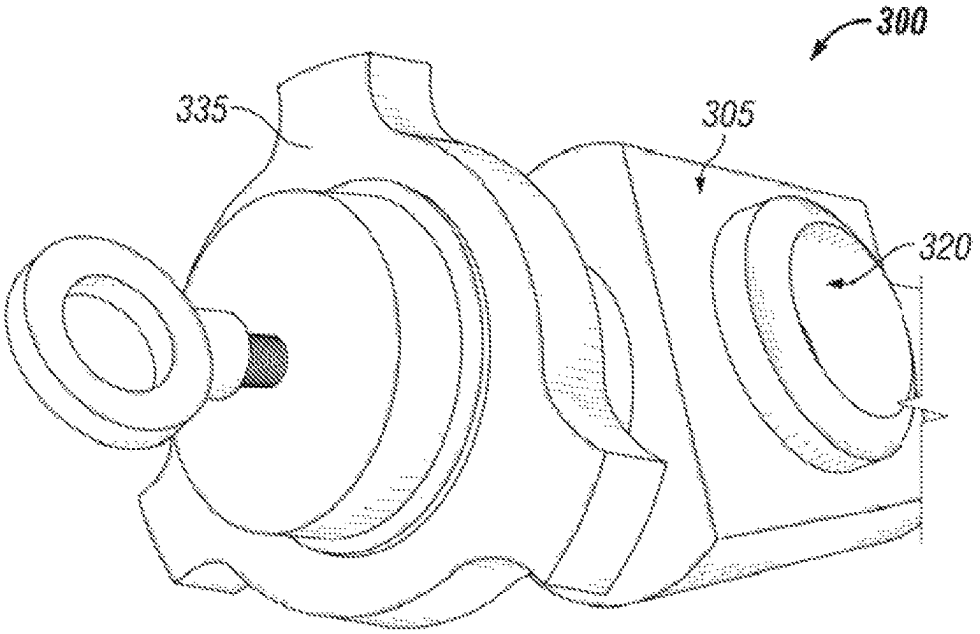

FIG. 3C

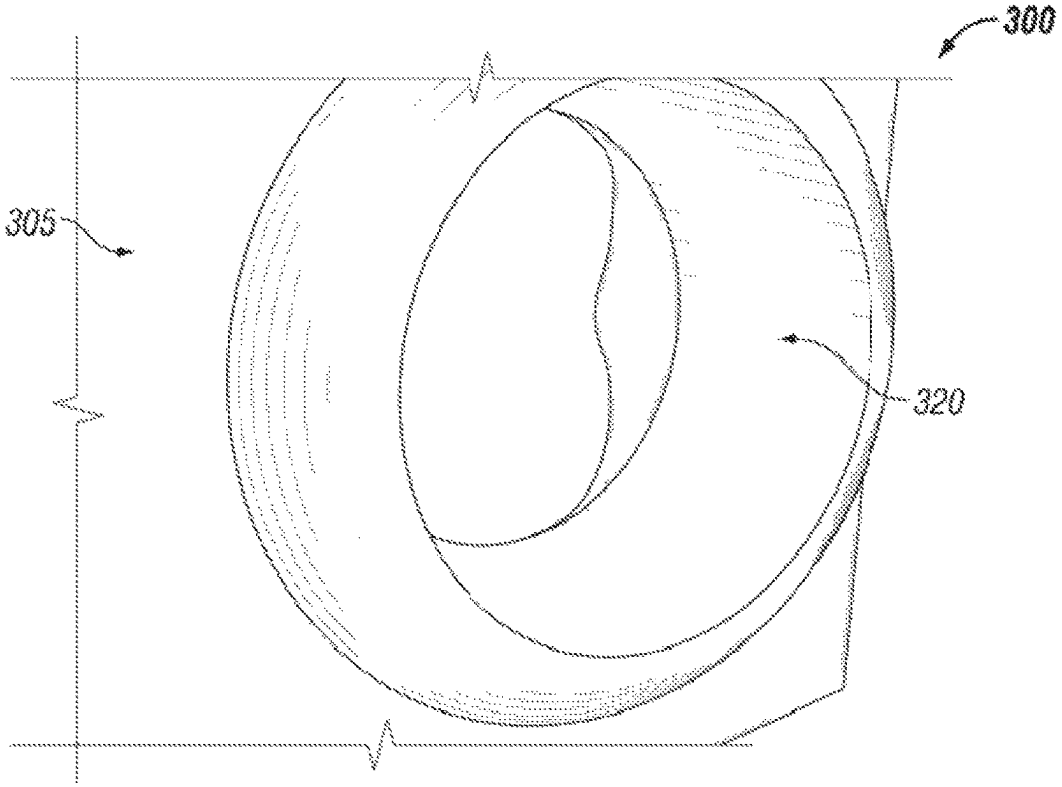

FIG. 3D

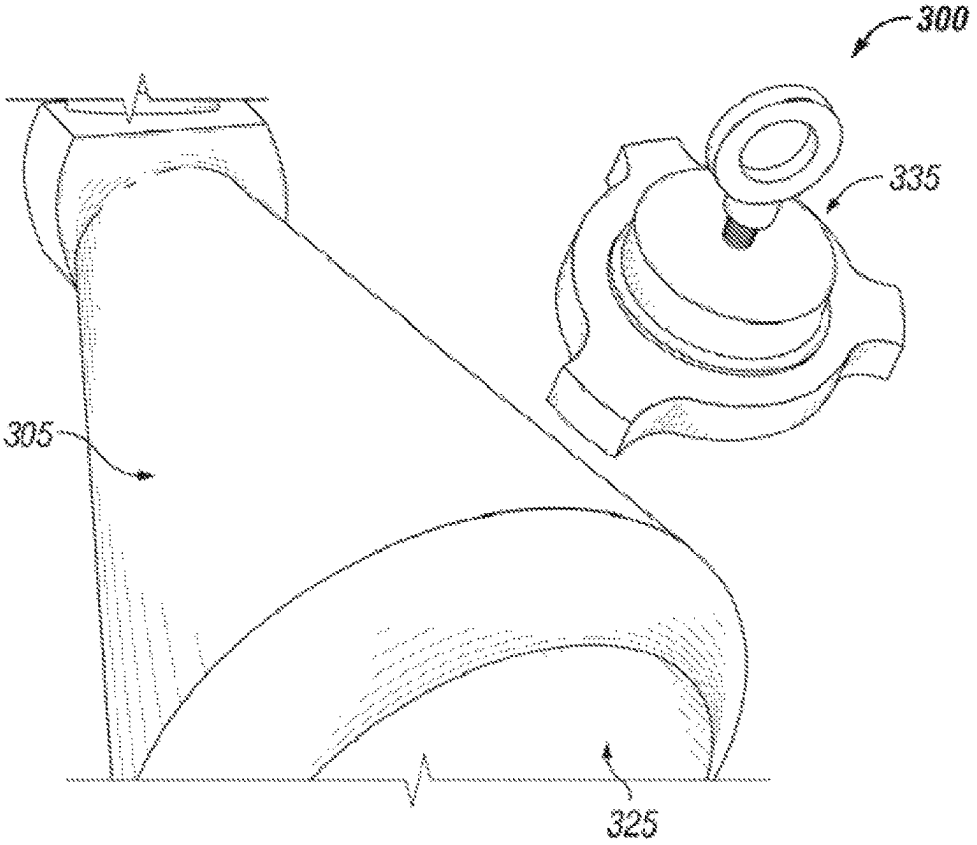

FIG. 3E

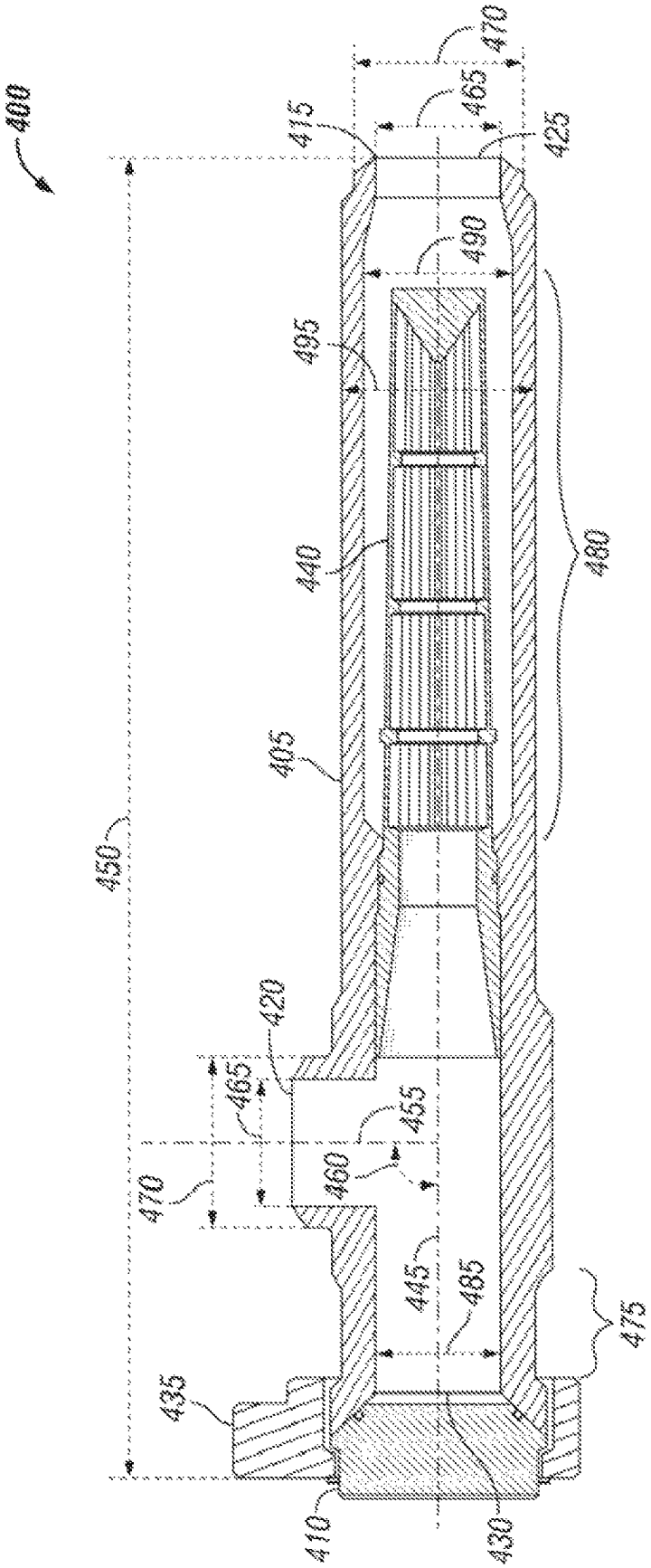
400
470
465
415
425
490
495
440
480
405
450
420
465
455
460
470
445
485
475
435
410
430

FIG. 4A

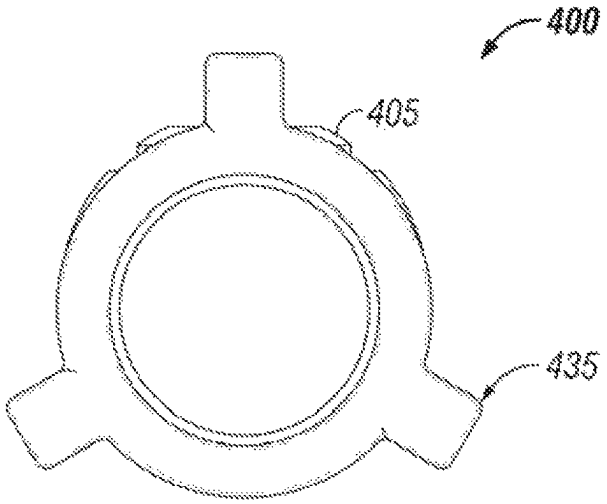

FIG. 4B

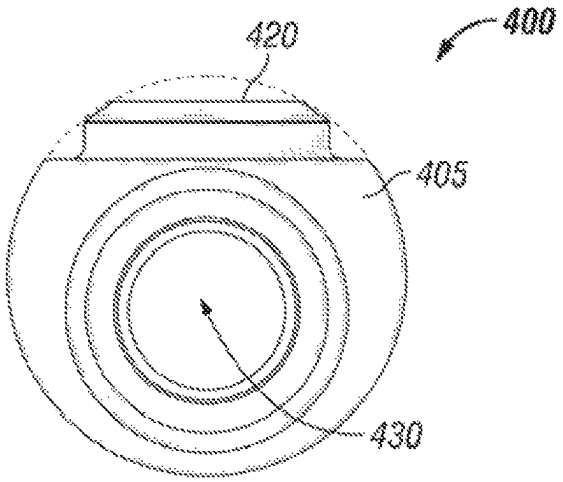

FIG. 4C

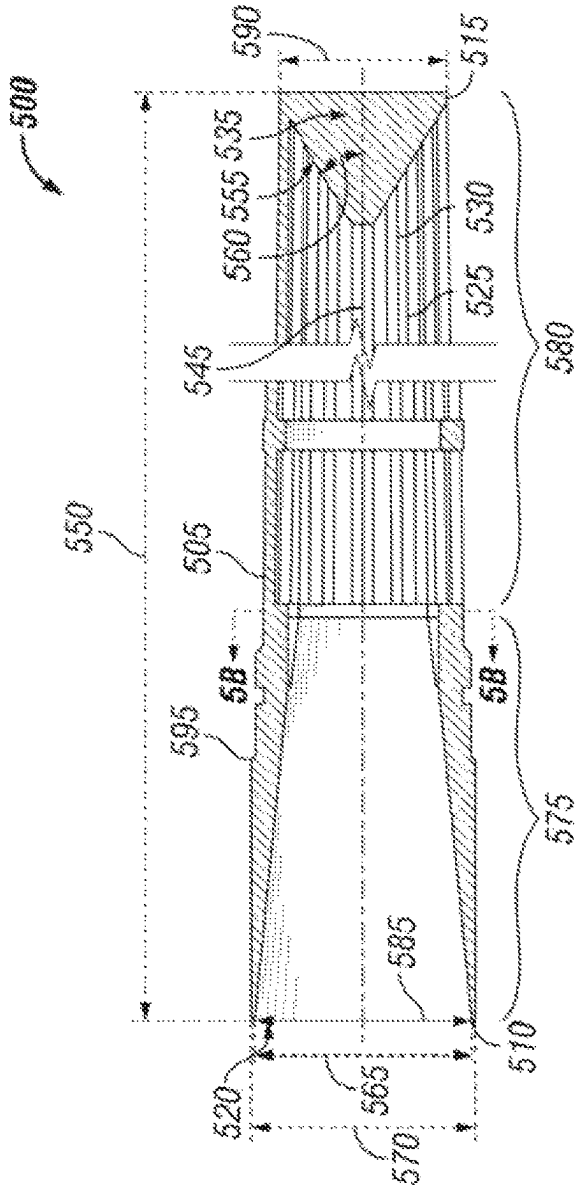
500
550
590
515
535
555
560
530
525
545
580
505
5B
5B
595
575
585
510
520
565
570

FIG. 5A

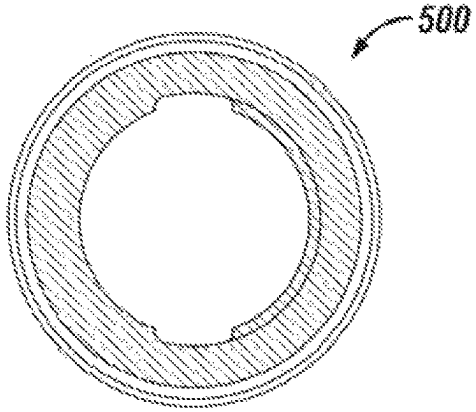

FIG. 5B

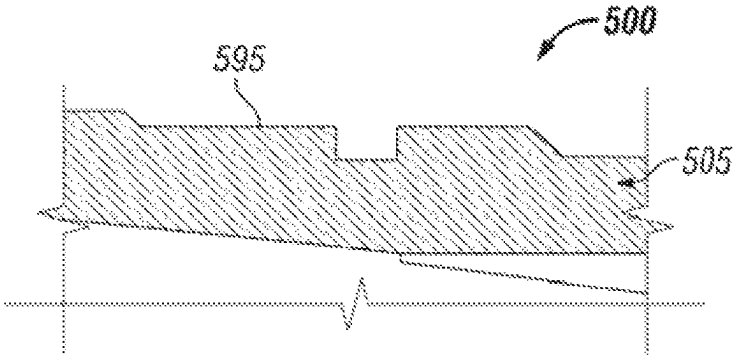

FIG. 5C

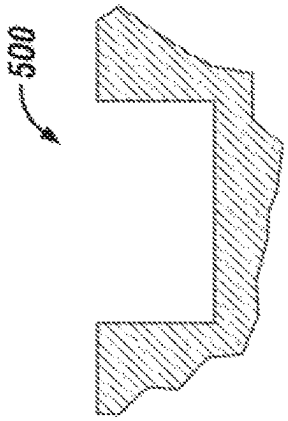

FIG. 5D

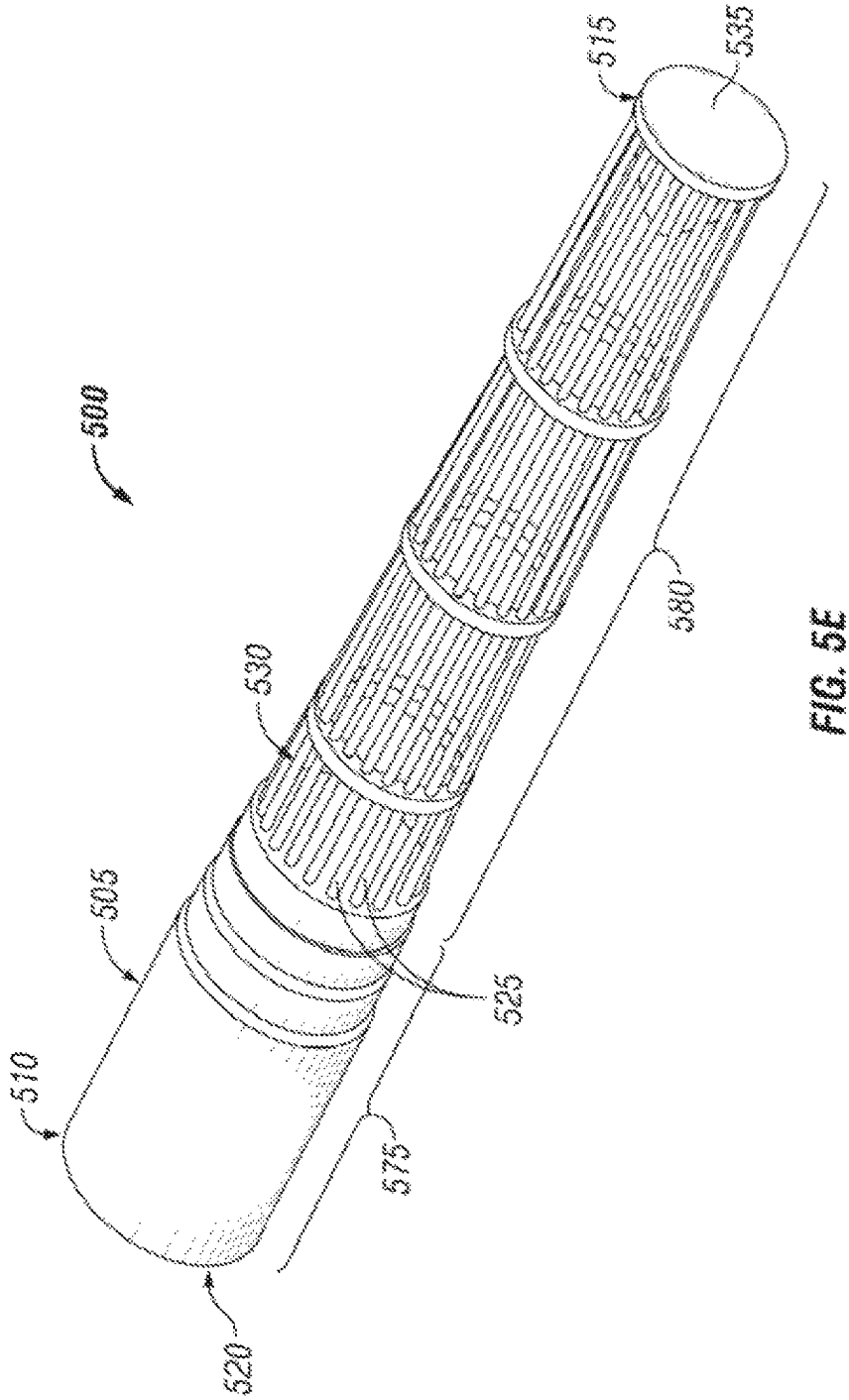

FIG. 5E

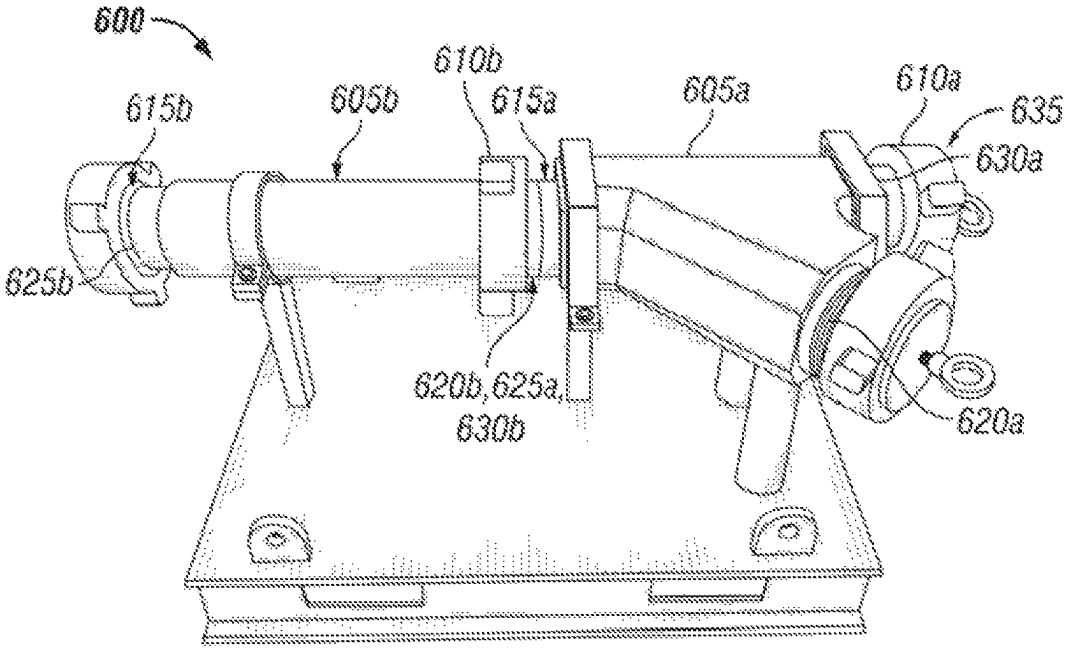
600
610b
615b
605b
615a
605a
610a
635
630a
625b
620b,625a,
630b
620a

FIG. 6A

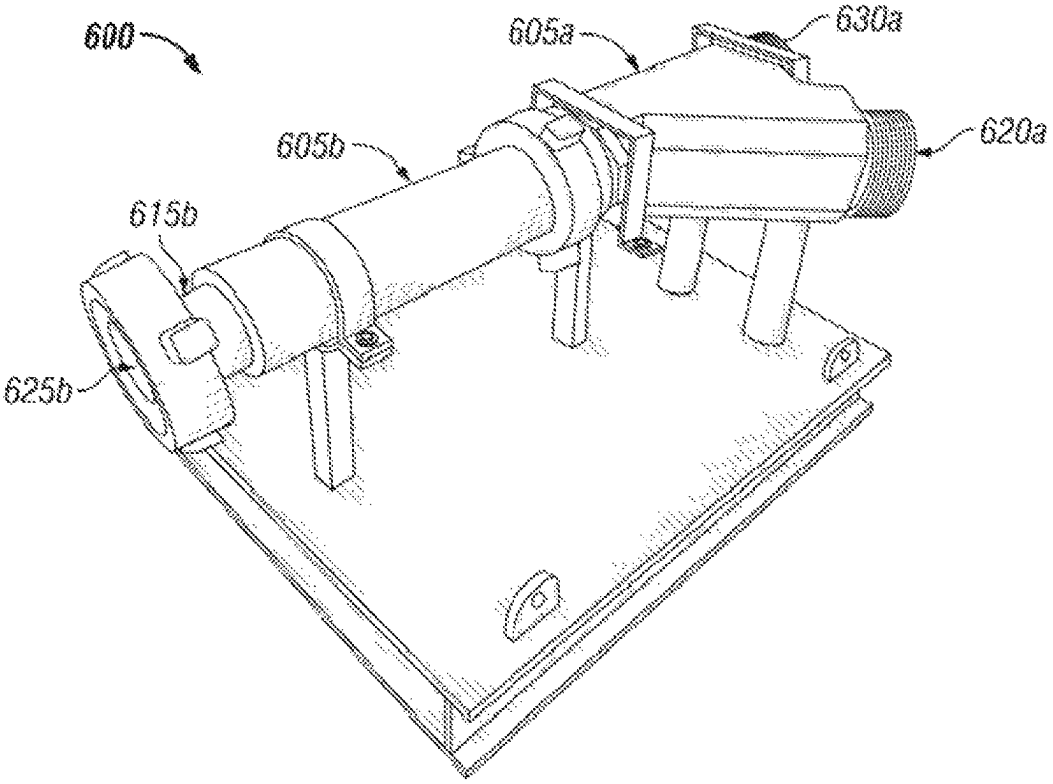
600
605a
630a
605b
620a
615b
625b

FIG. 6B

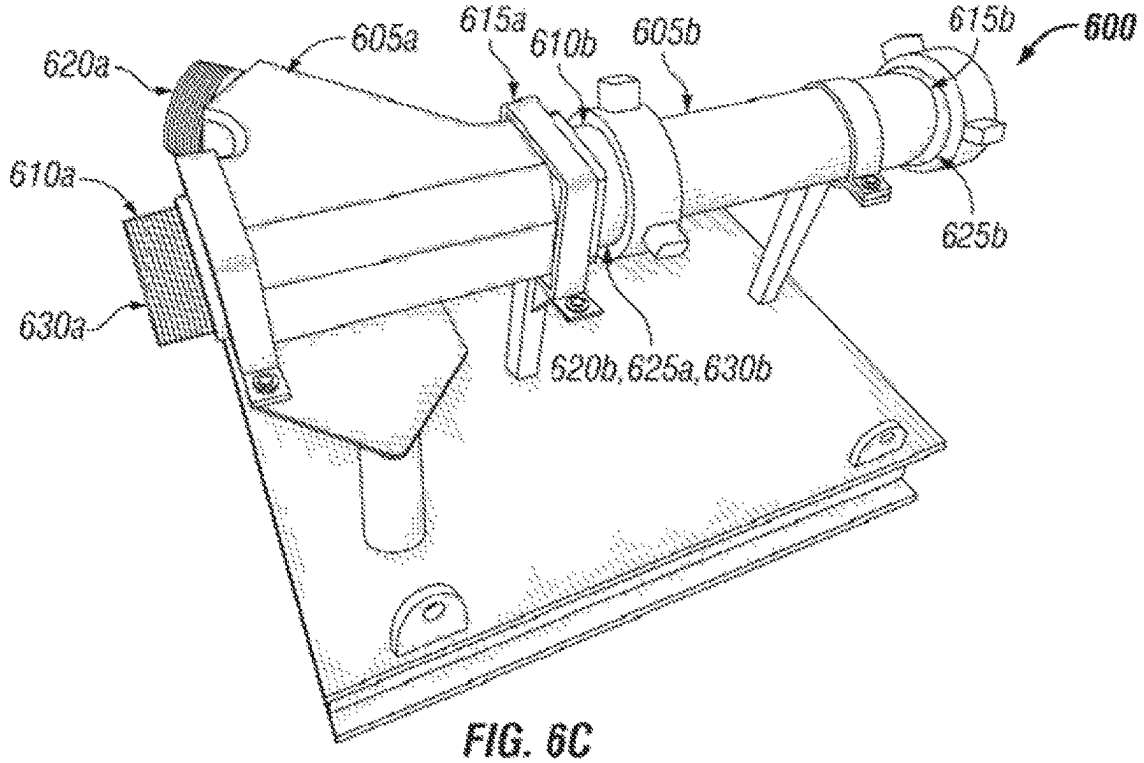
620a
605a
615a
610b
605b
615b
600
610a
625b
630a
620b, 625a, 630b

FIG. 6C

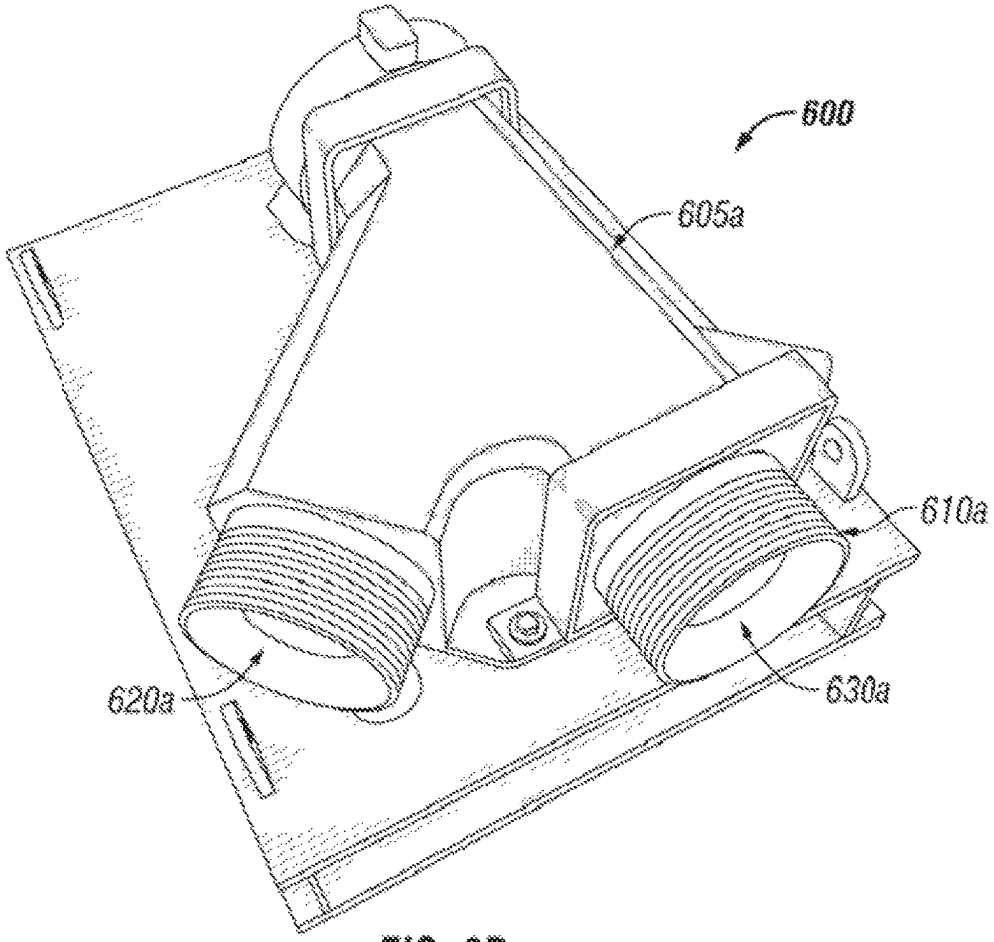
600
605a
610a
620a
630a

FIG. 6D

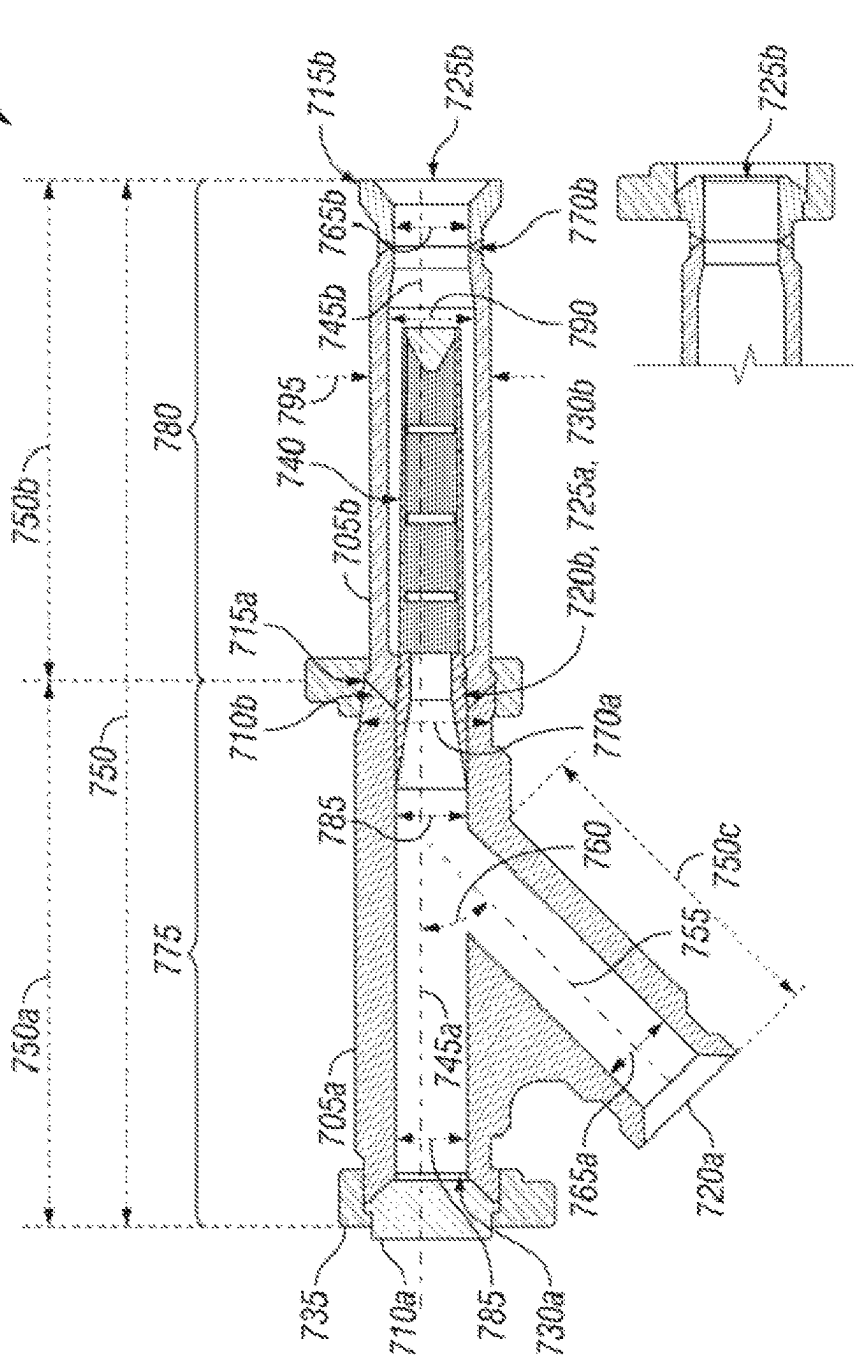
700
715b
725b
765b
770b
745b
790
795
740
730b
705b
720b, 725a,
715a
710b
770a
785
760
750c
755
745a
705a
765a
720a
735
710a
785
730a
750b
750
750a
780
775
725b

FIG. 7A

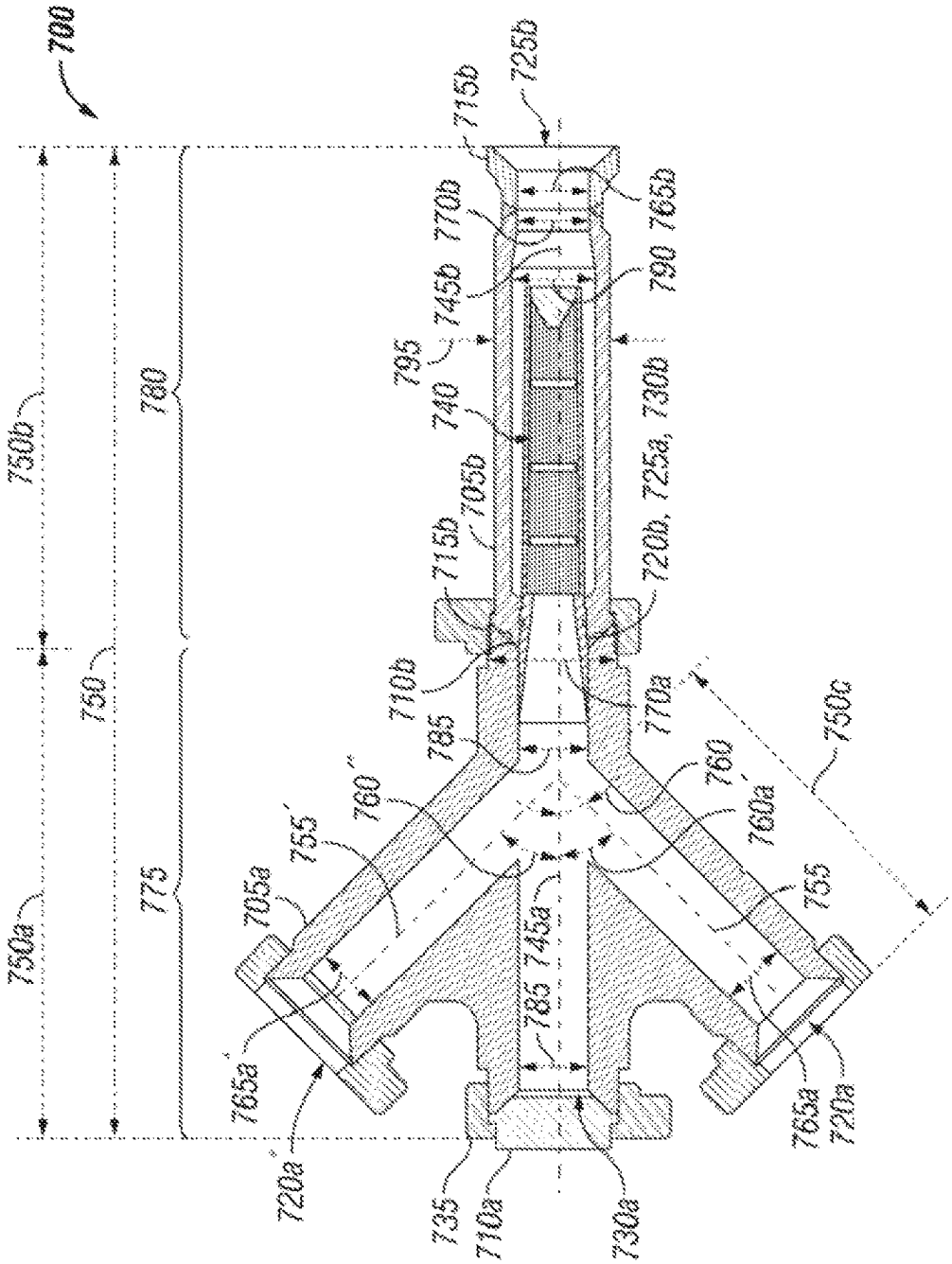
700
725b
715b
770b
765b
745b
790
795
740
730b
705b
720b, 725a,
715b
710b
770a
785
760
760
760a
755
755
705a
745a
785
765a
720a
765a
720a
735
710a
730a
750b
750
750a
780
775
750c

FIG. 7B

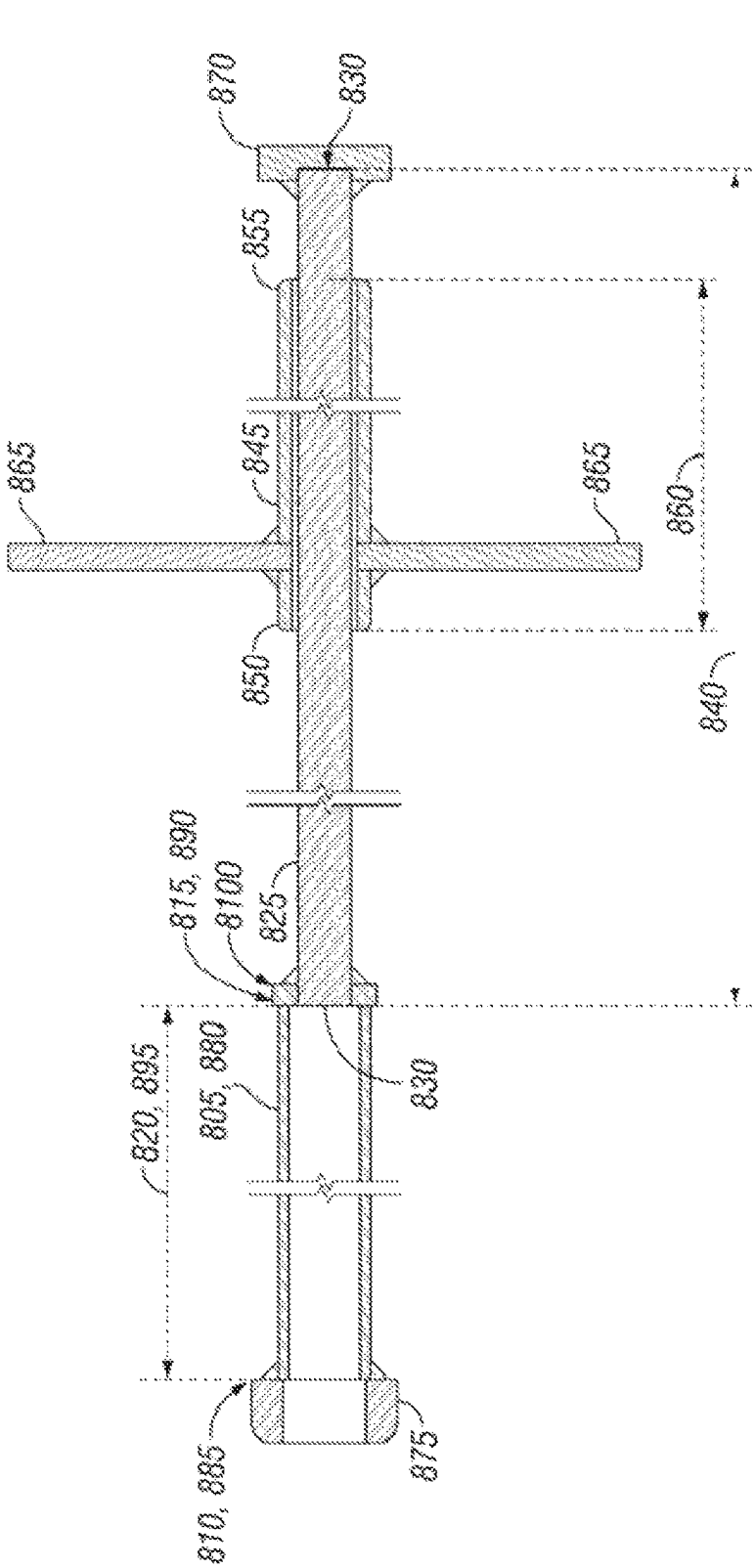
800
870
830
855
845
865
865
860
850
840
815, 890
8100
825
820, 895
805, 880
830
810, 885
875

FIG. 8A

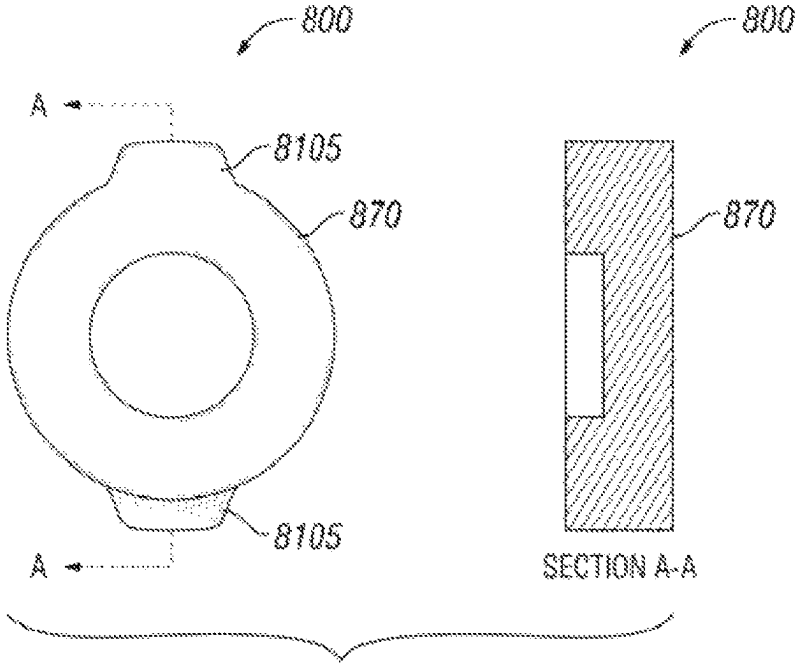

FIG. 8B

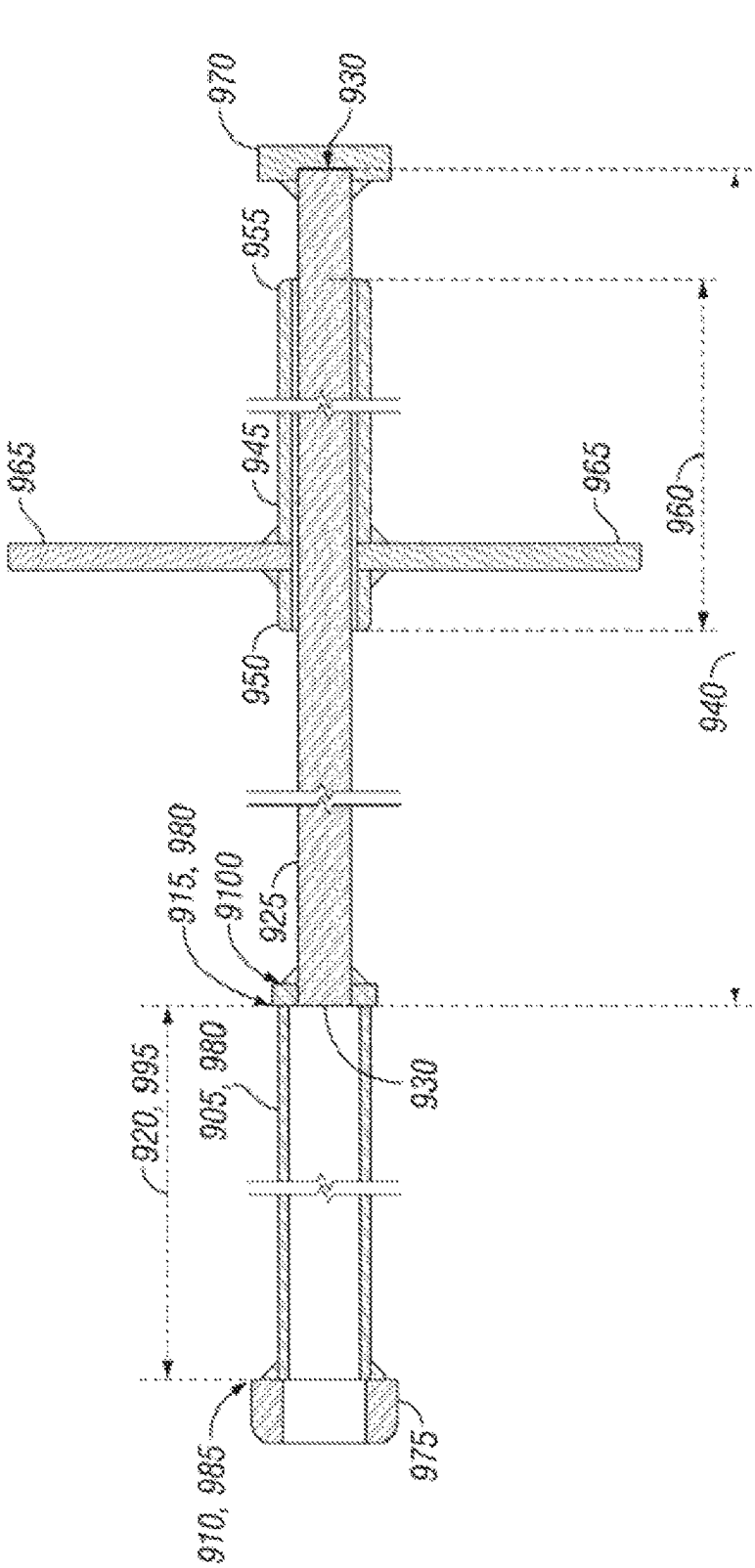
900
970
930
955
965
945
965
960
950
940
915, 980
9100
925
920, 995
905, 980
930
910, 985
975

FIG. 9A

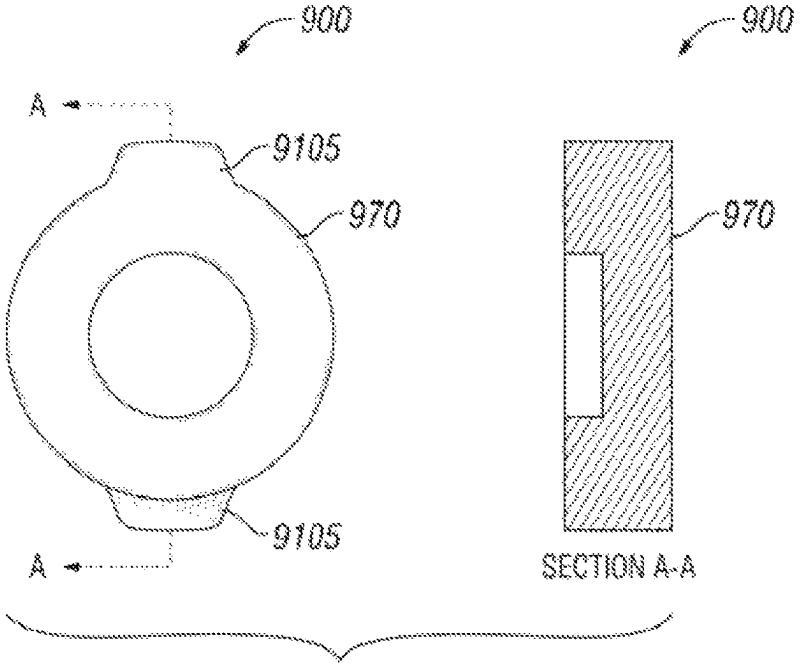

FIG. 9B

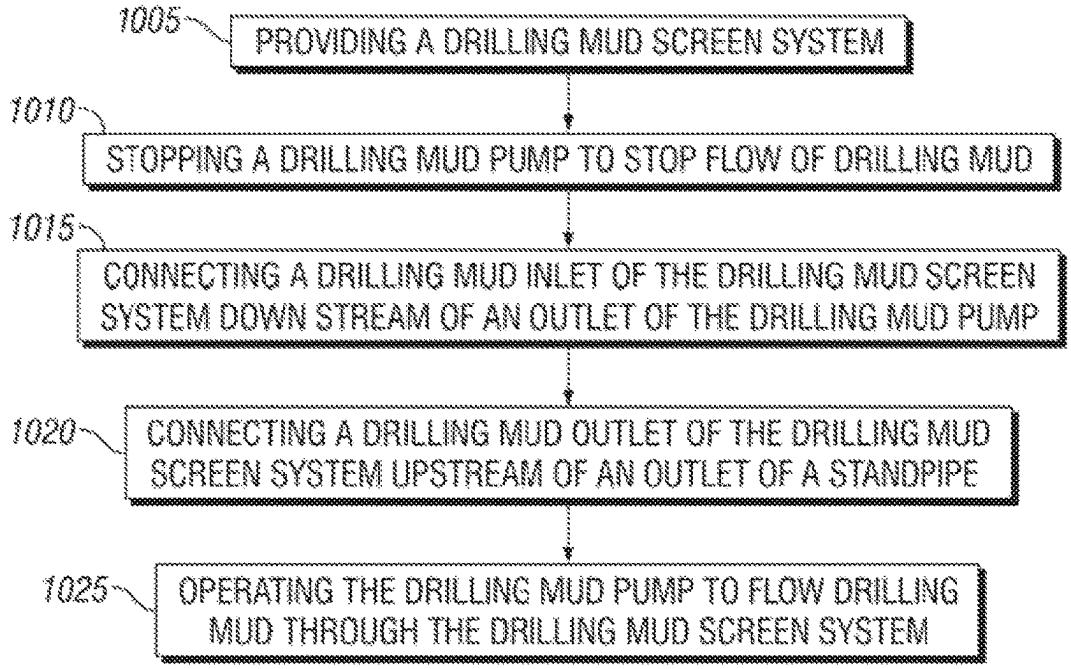
1005
PROVIDING A DRILLING MUD SCREEN SYSTEM
1010
STOPPING A DRILLING MUD PUMP TO STOP FLOW OF DRILLING MUD
1015
CONNECTING A DRILLING MUD INLET OF THE DRILLING MUD SCREEN SYSTEM DOWN STREAM OF AN OUTLET OF THE DRILLING MUD PUMP
1020
CONNECTING A DRILLING MUD OUTLET OF THE DRILLING MUD SCREEN SYSTEM UPSTREAM OF AN OUTLET OF A STANDPIPE
1025
OPERATING THE DRILLING MUD PUMP TO FLOW DRILLING MUD THROUGH THE DRILLING MUD SCREEN SYSTEM

FIG. 10

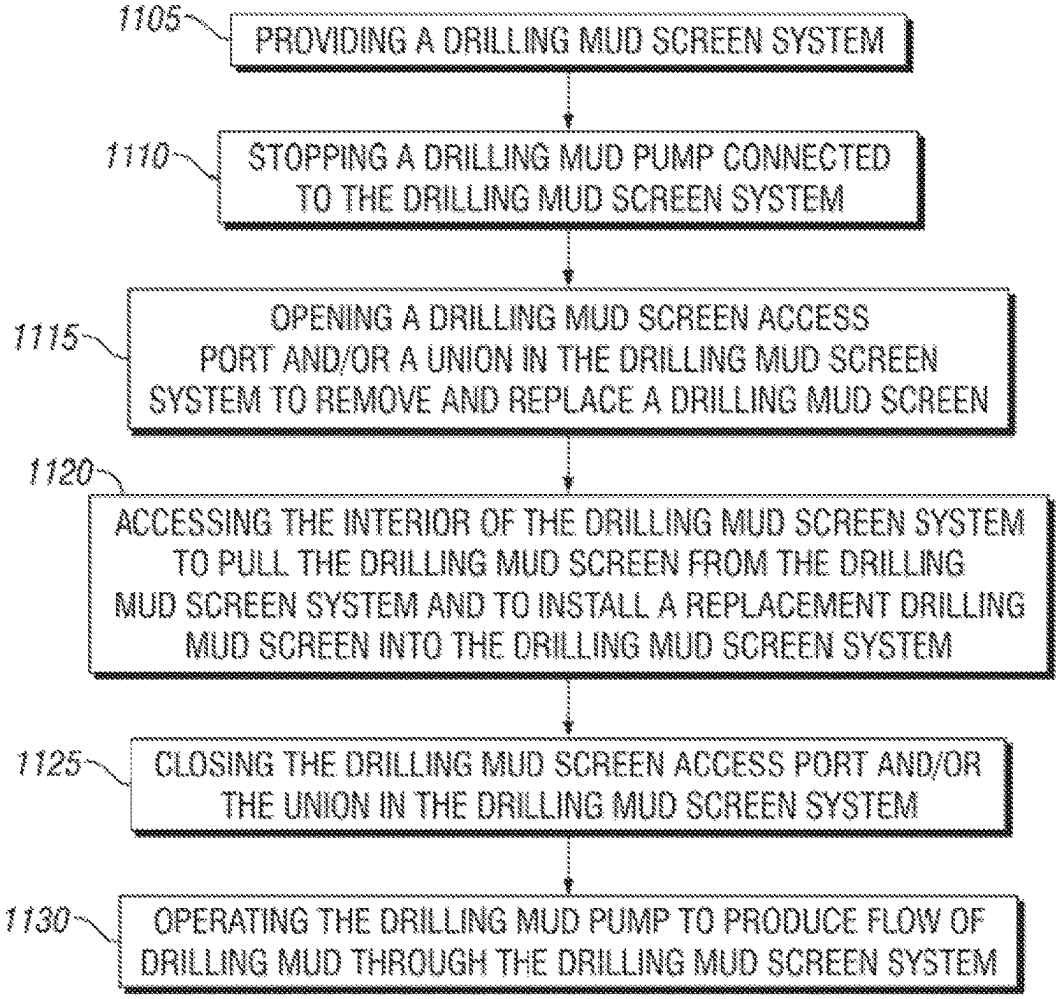
1105
PROVIDING A DRILLING MUD SCREEN SYSTEM
1110
STOPPING A DRILLING MUD PUMP CONNECTED TO THE DRILLING MUD SCREEN SYSTEM
1115
OPENING A DRILLING MUD SCREEN ACCESS PORT AND/OR A UNION IN THE DRILLING MUD SCREEN SYSTEM TO REMOVE AND REPLACE A DRILLING MUD SCREEN
1120
ACCESSING THE INTERIOR OF THE DRILLING MUD SCREEN SYSTEM TO PULL THE DRILLING MUD SCREEN FROM THE DRILLING MUD SCREEN SYSTEM AND TO INSTALL A REPLACEMENT DRILLING MUD SCREEN INTO THE DRILLING MUD SCREEN SYSTEM
1125
CLOSING THE DRILLING MUD SCREEN ACCESS PORT AND/OR THE UNION IN THE DRILLING MUD SCREEN SYSTEM
1130
OPERATING THE DRILLING MUD PUMP TO PRODUCE FLOW OF DRILLING MUD THROUGH THE DRILLING MUD SCREEN SYSTEM

FIG. 11

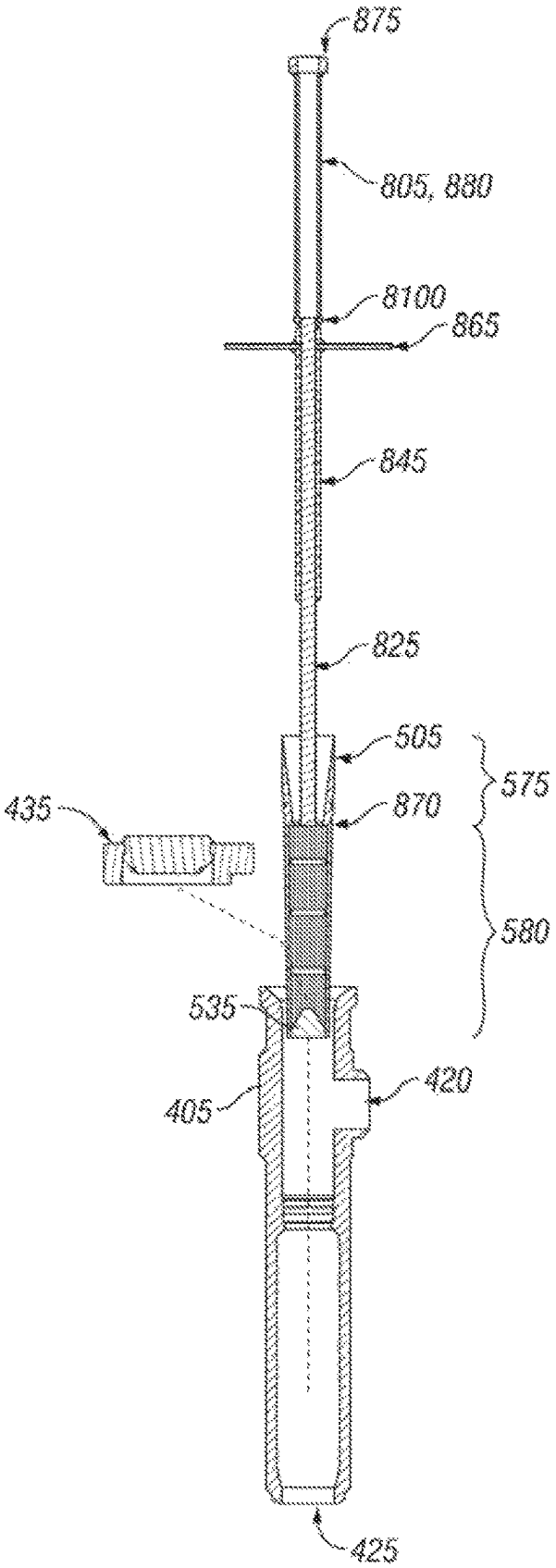

FIG. 12A

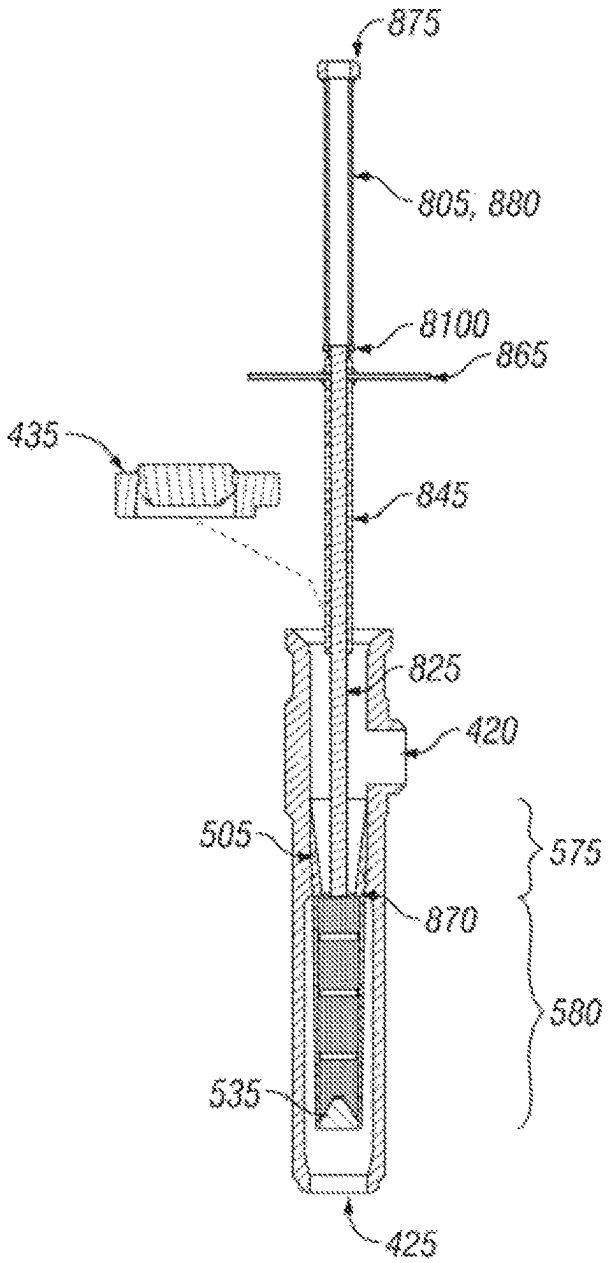

FIG. 12B

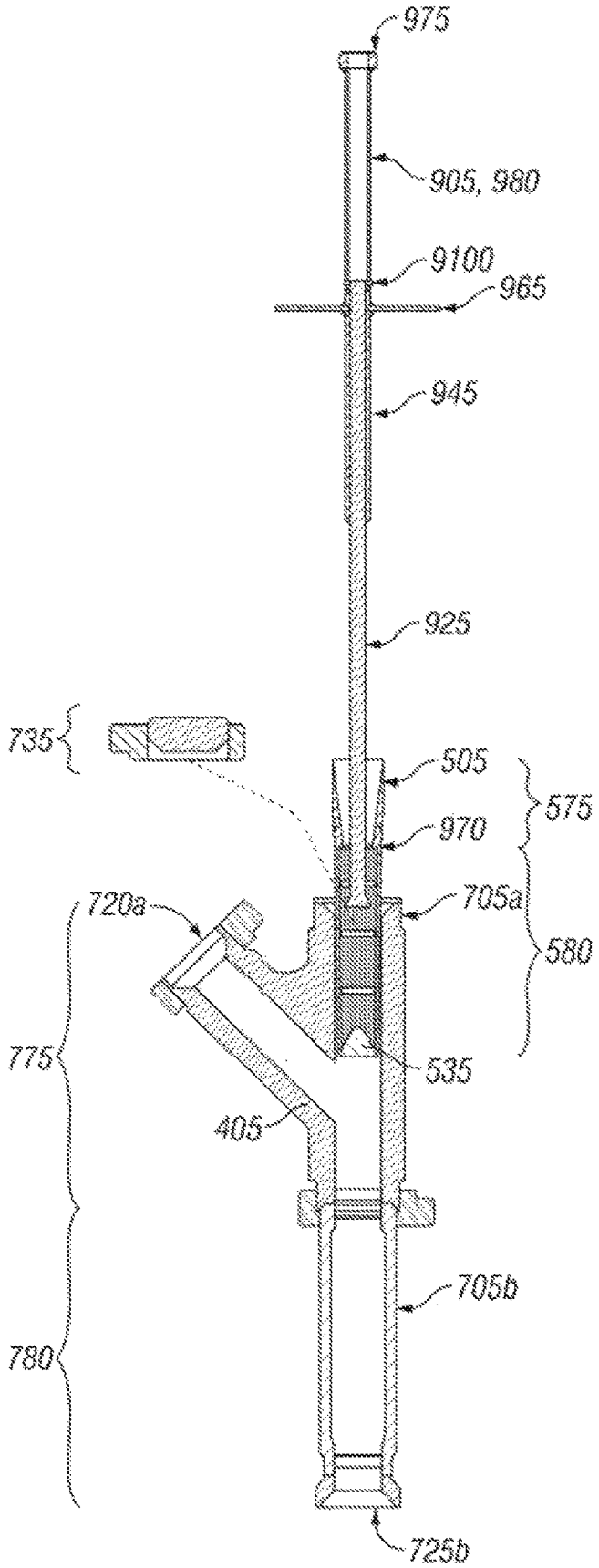
975
905, 980
9100
965
945
925
735
505
575
970
720a
705a
580
775
535
405
705b
780
725b

FIG. 13A

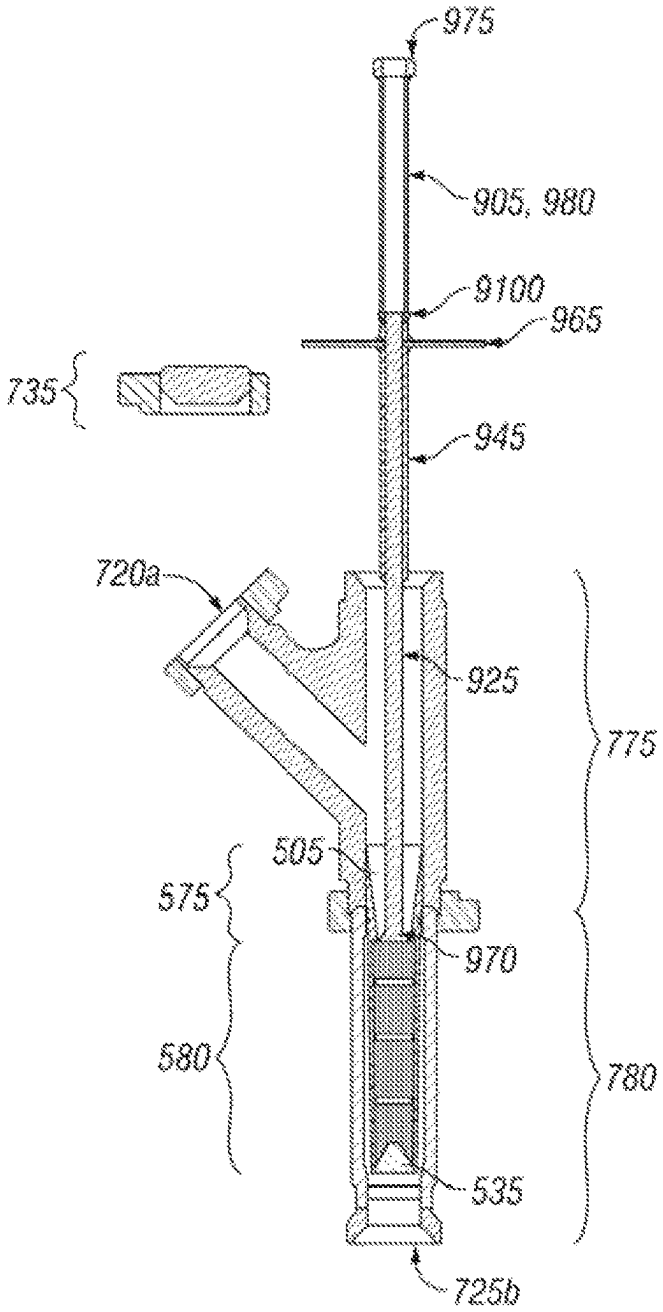
975
905, 980
9100
965
735
945
720a
925
775
505
575
970
580
780
535
725b

FIG. 13B

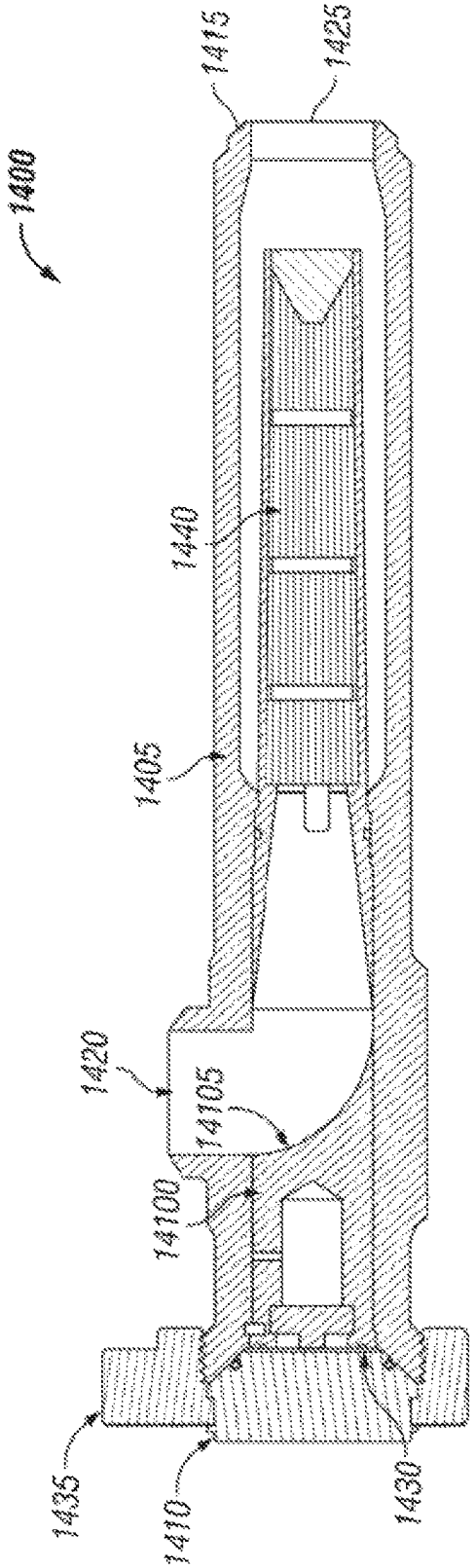

FIG. 14

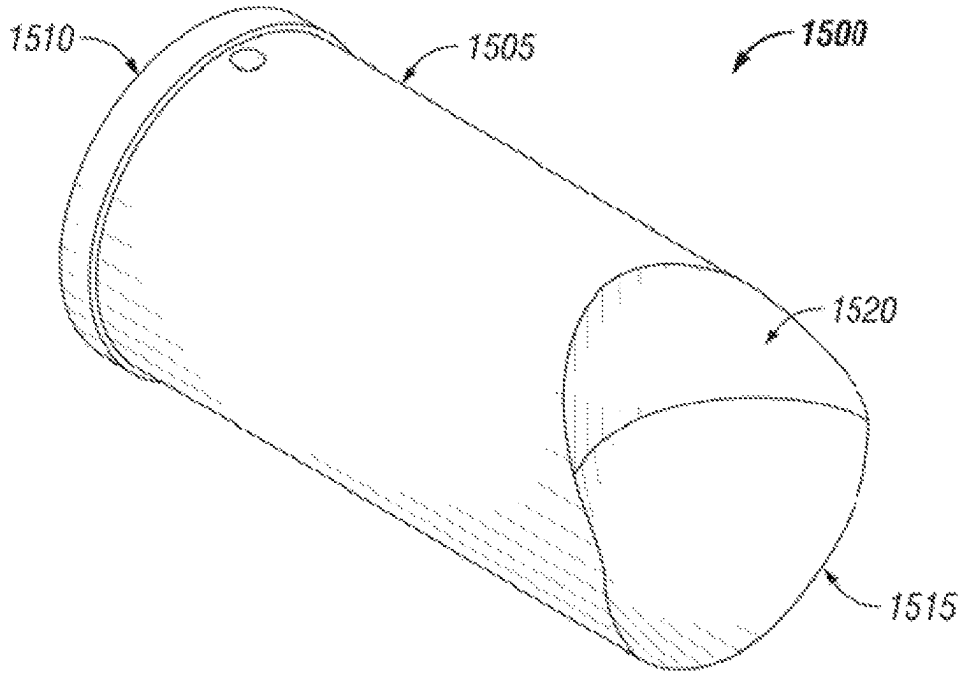

FIG. 15A

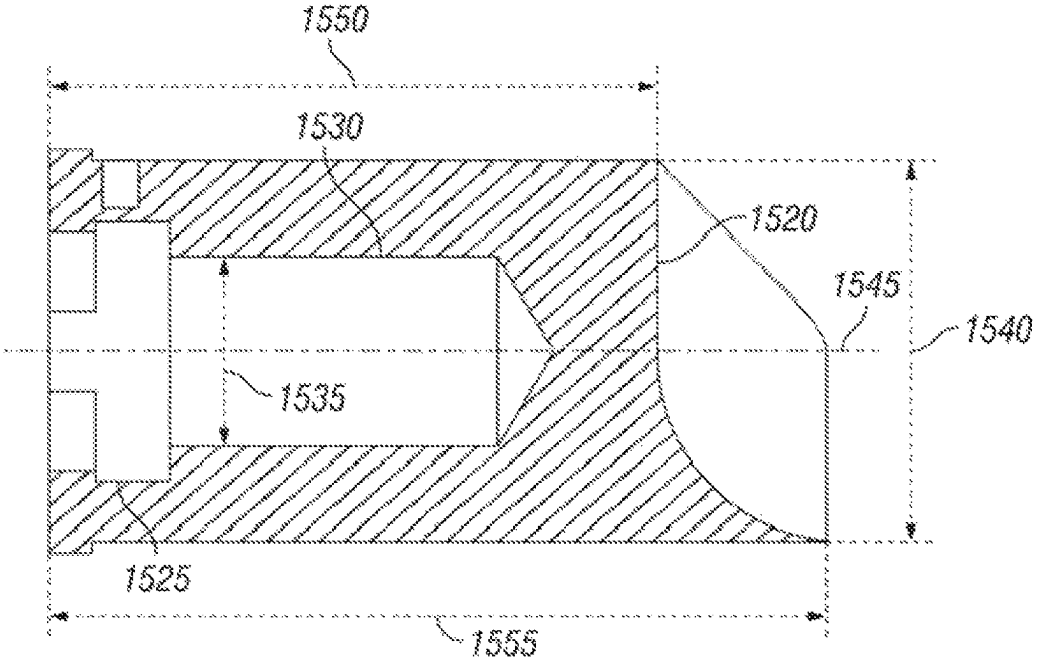

FIG. 15B

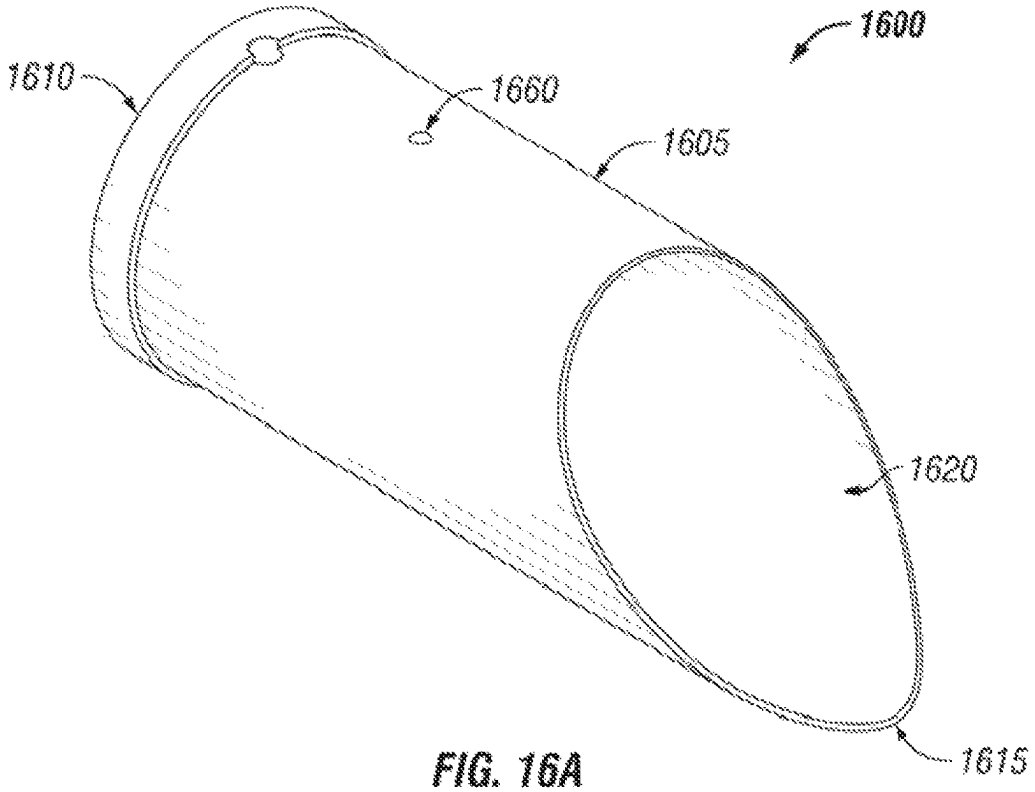

FIG. 16A

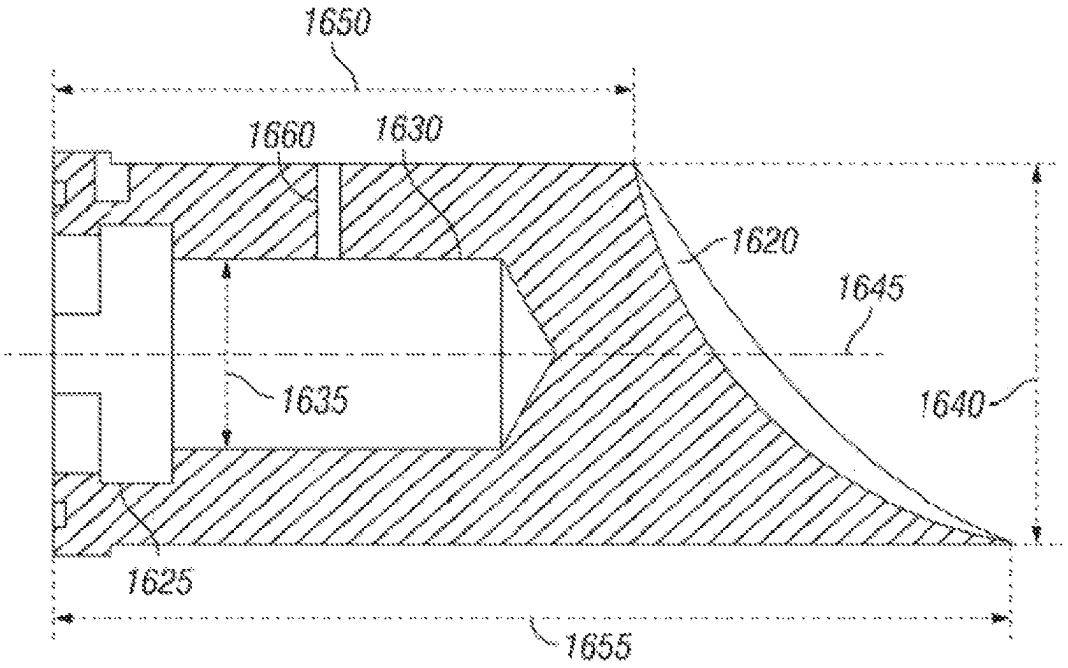

FIG. 16B

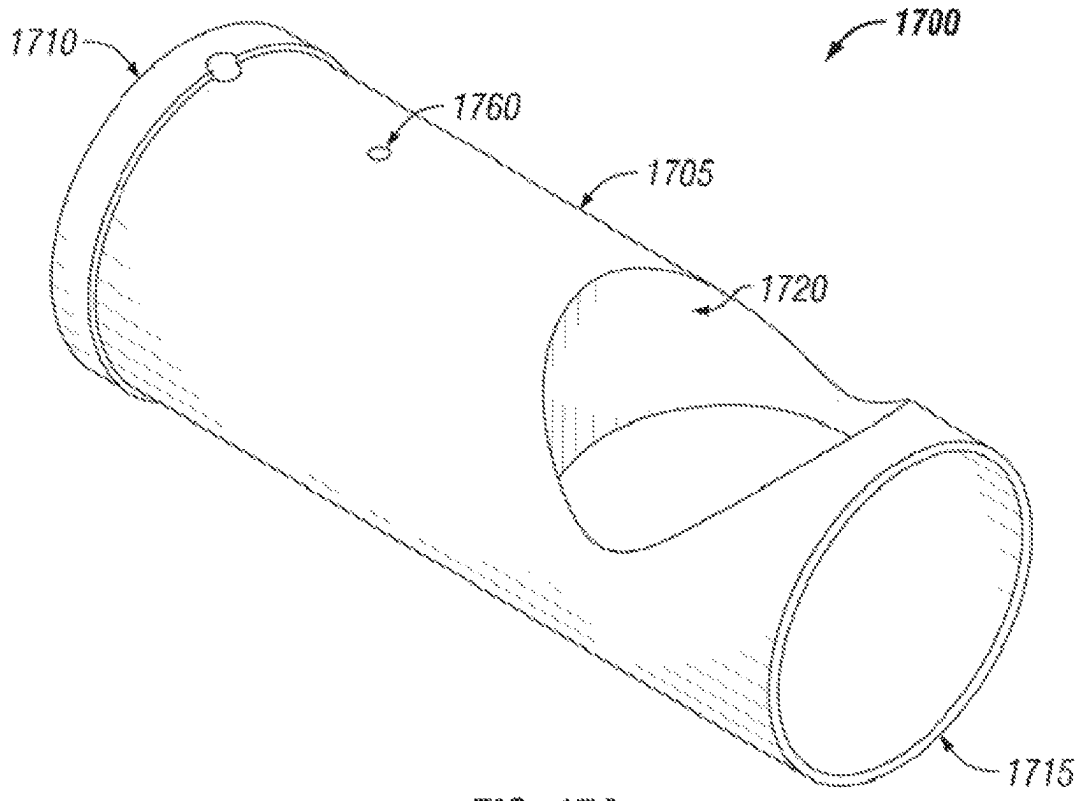

FIG. 17A

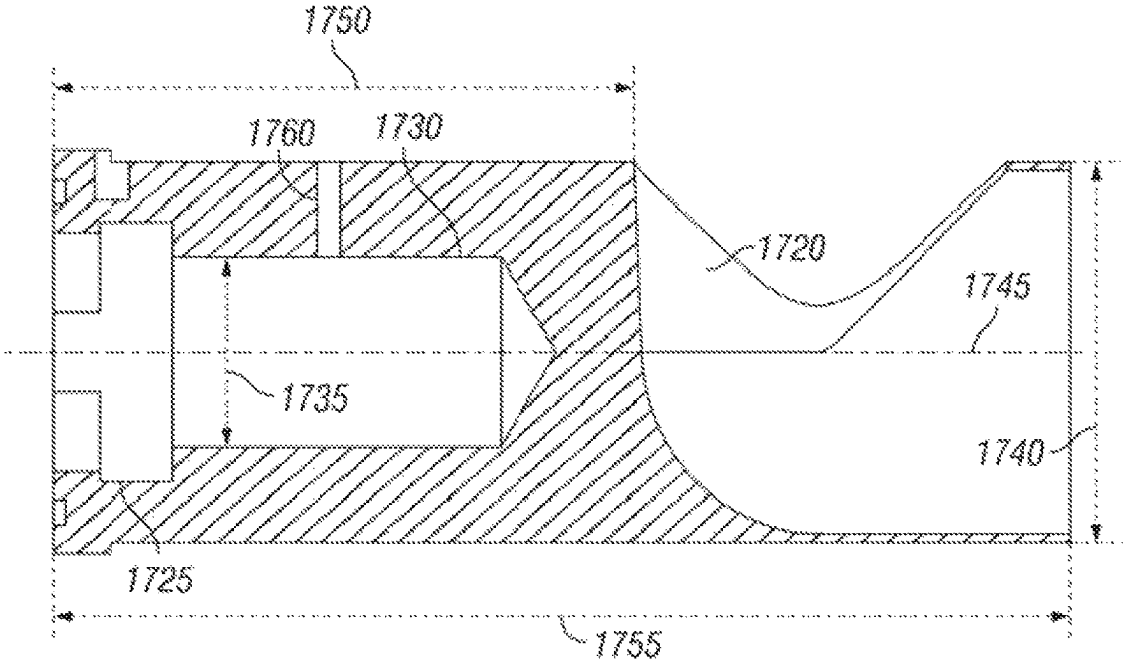

FIG. 17B

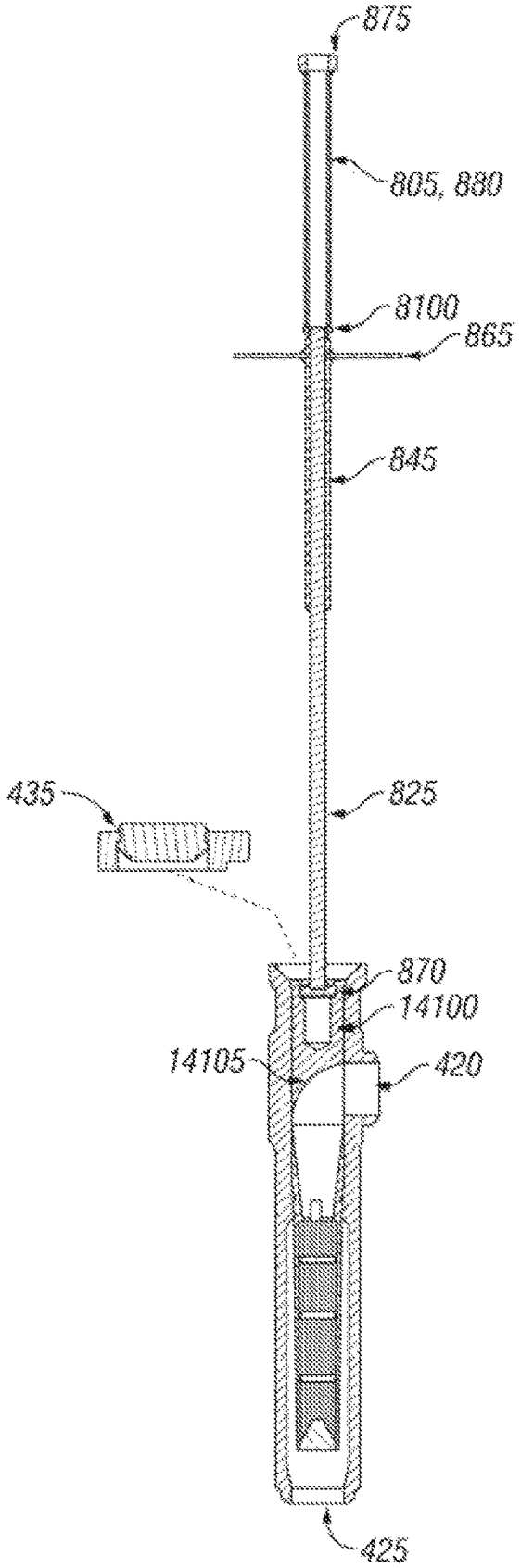

FIG. 18A

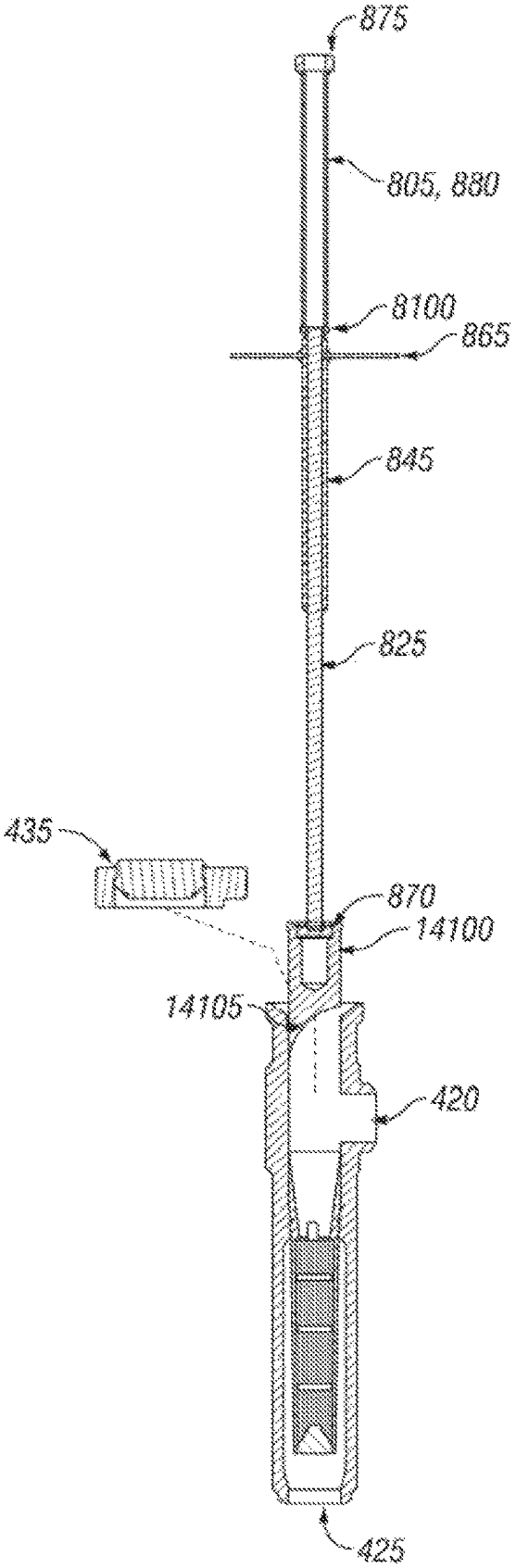

FIG. 18B

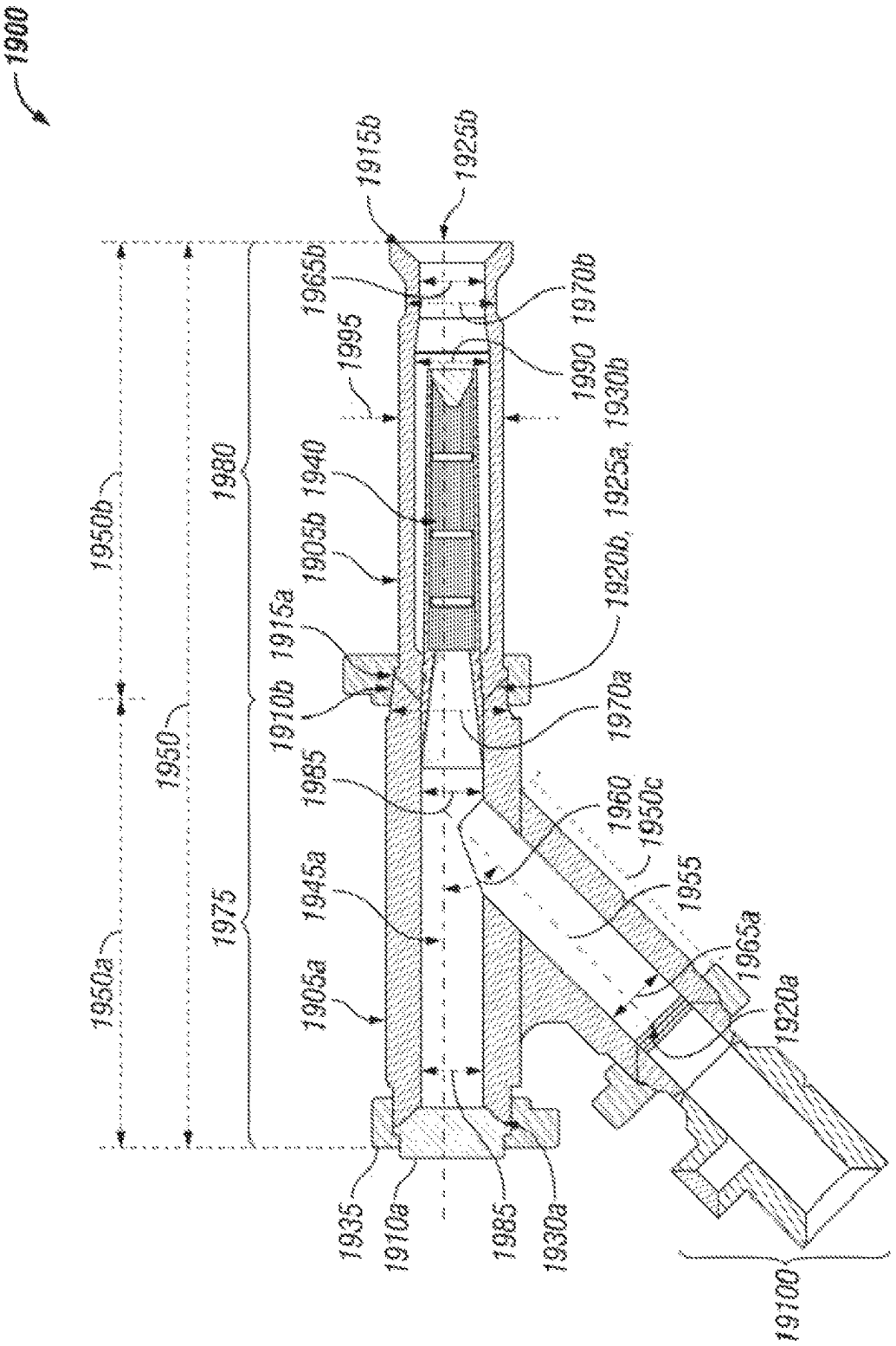
1900
1915b
1925b
1965b
1970b
1995
1990
1930b
1980
1940
1905b
1920b, 1925a,
1915a
1910b
1970a
1950b
1950
1985
1960
1950c
1955
1945a
1975
1965a
1920a
1950a
1905a
1935
1910a
1985
1930a
19100

FIG. 19

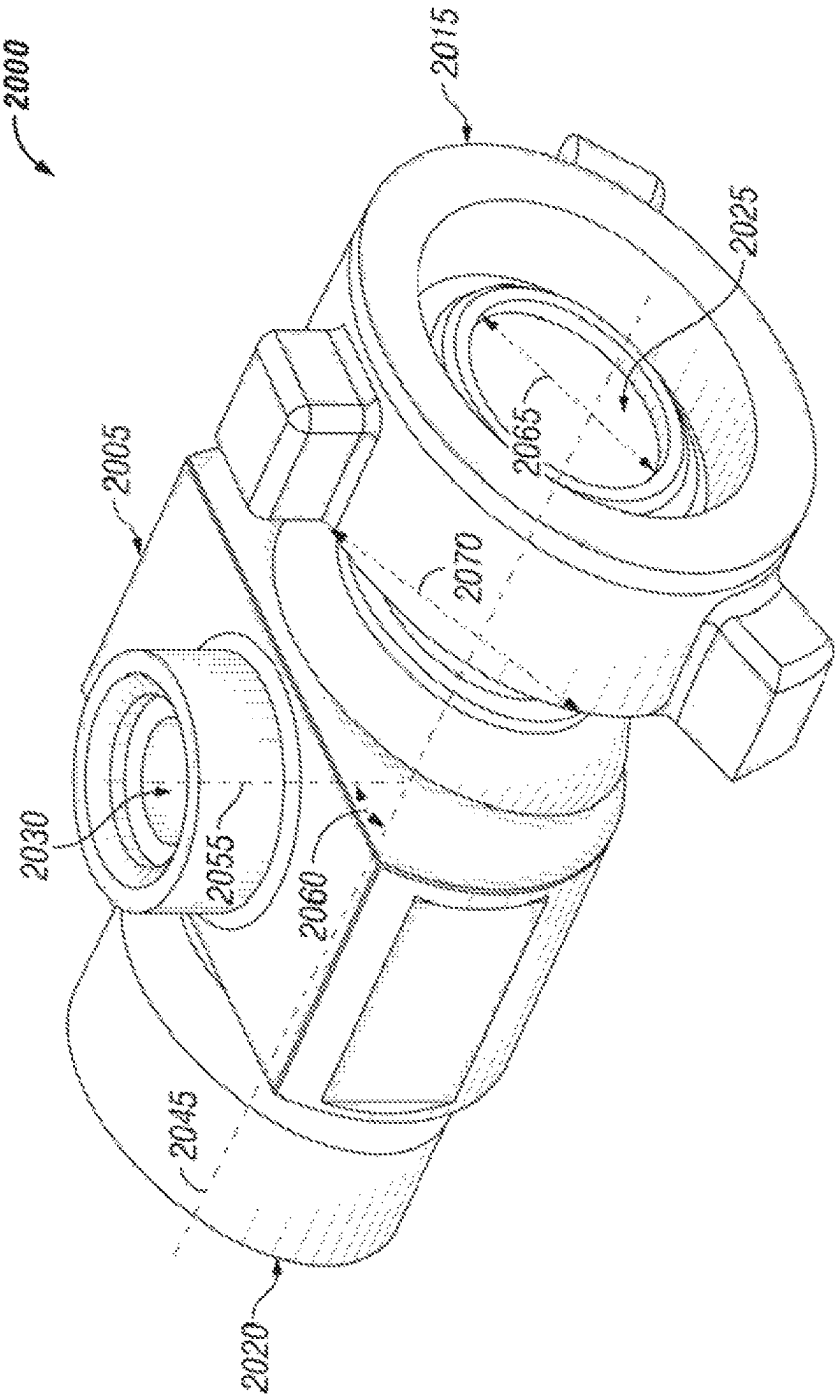

FIG. 20A

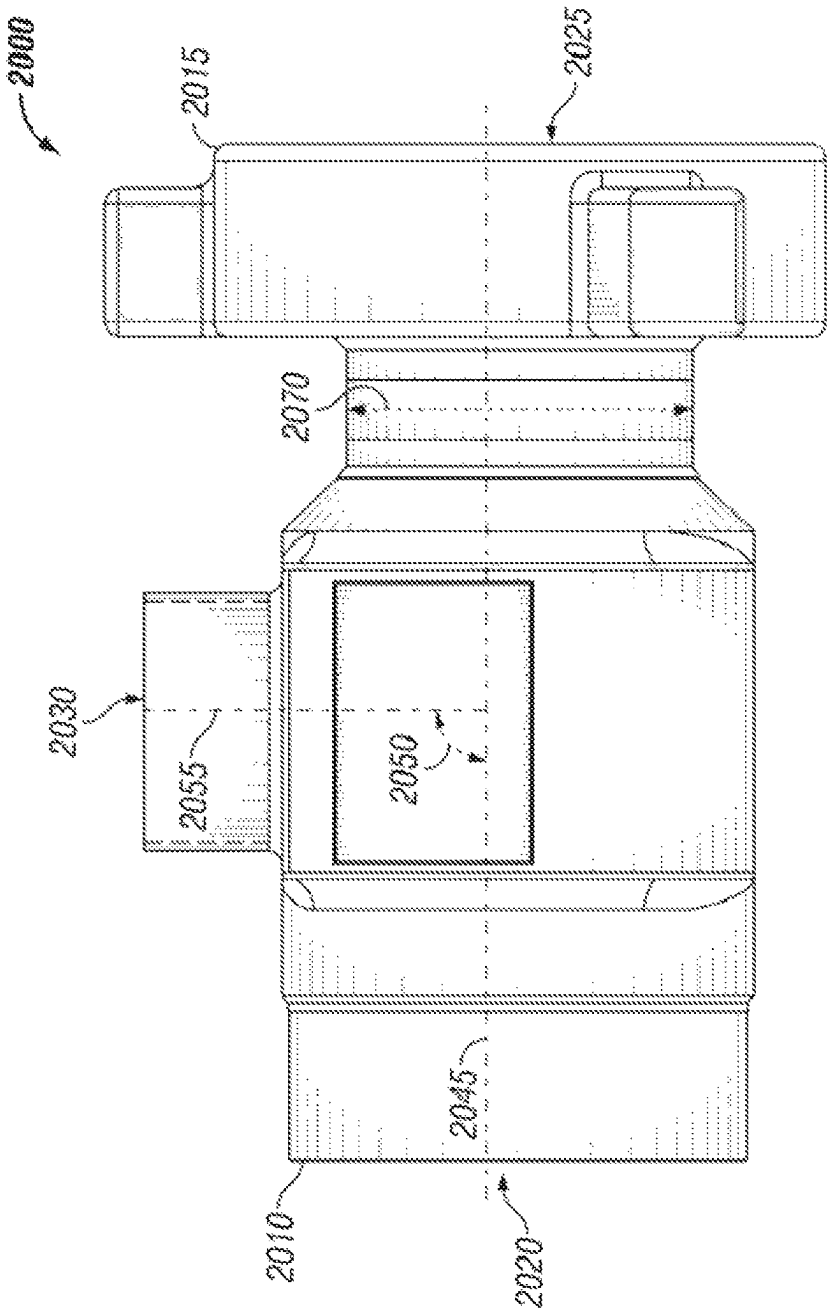

FIG. 20B

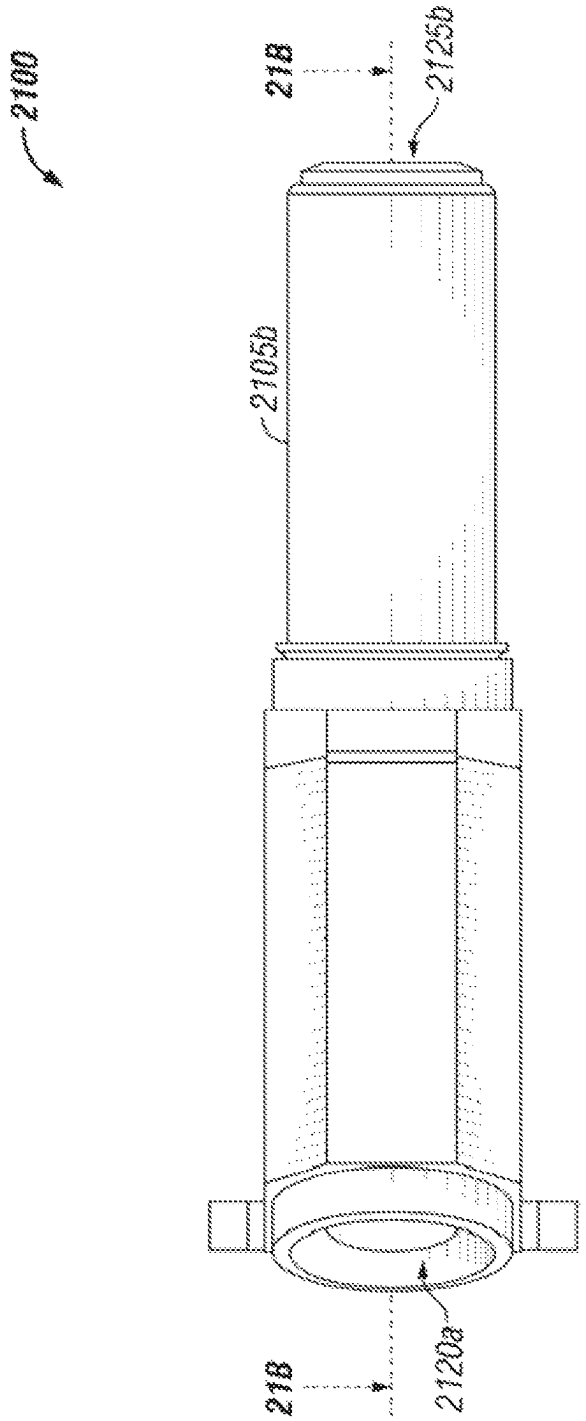

FIG. 21A

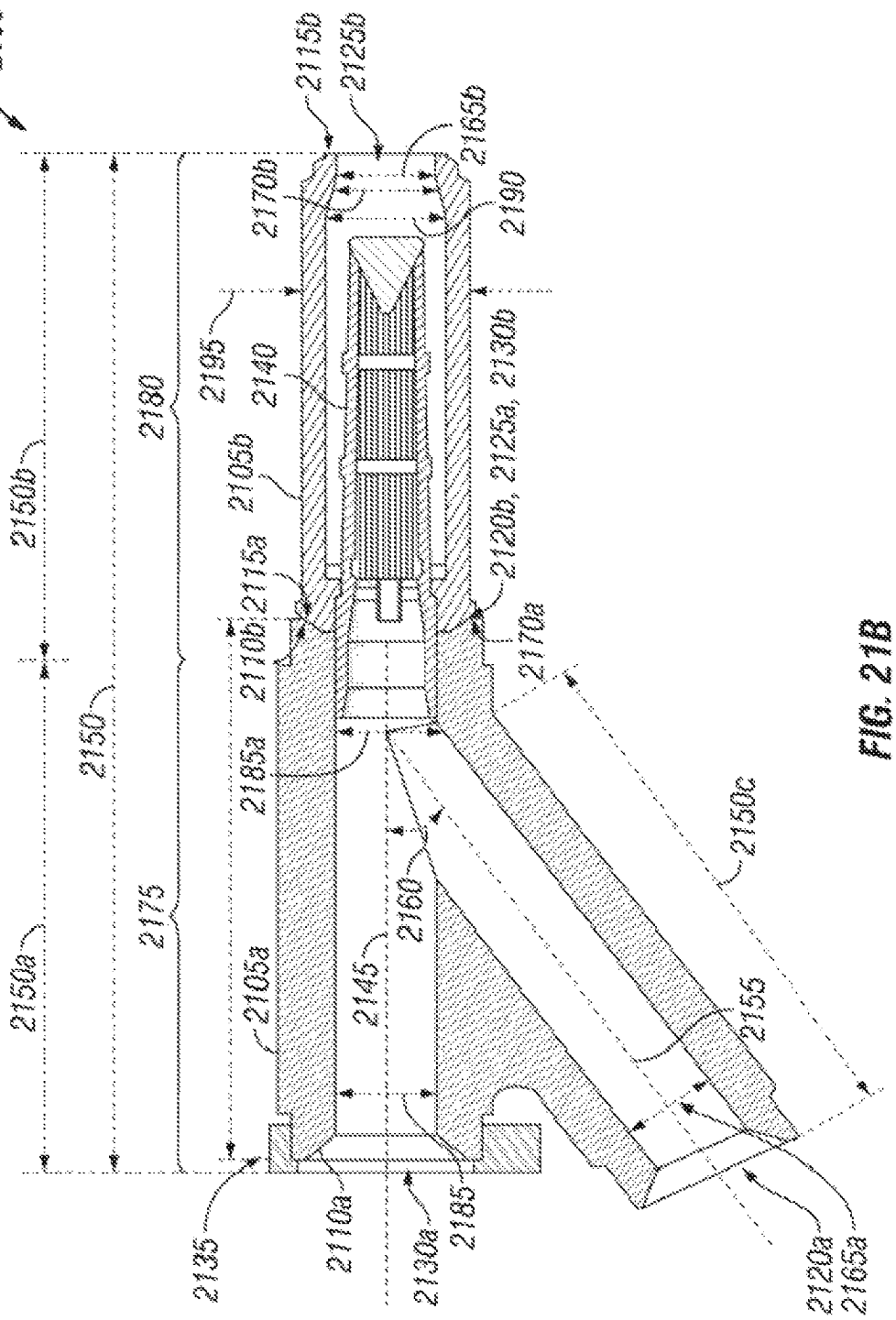
2100
2115b
2125b
2165b
2170b
2190
2195
2140
2180
2105b
2150b
2120b, 2125a, 2130b
2115a
2110b
2170a
2150
2186a
2150c
2175
2160
2150a
2105a
2145
2155
2135
2110a
2130a
2185
2120a
2165a

FIG. 21B

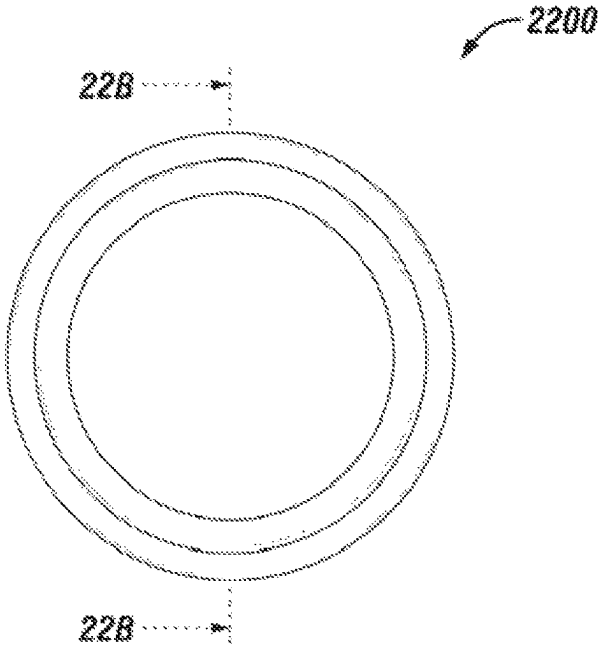

FIG. 22A

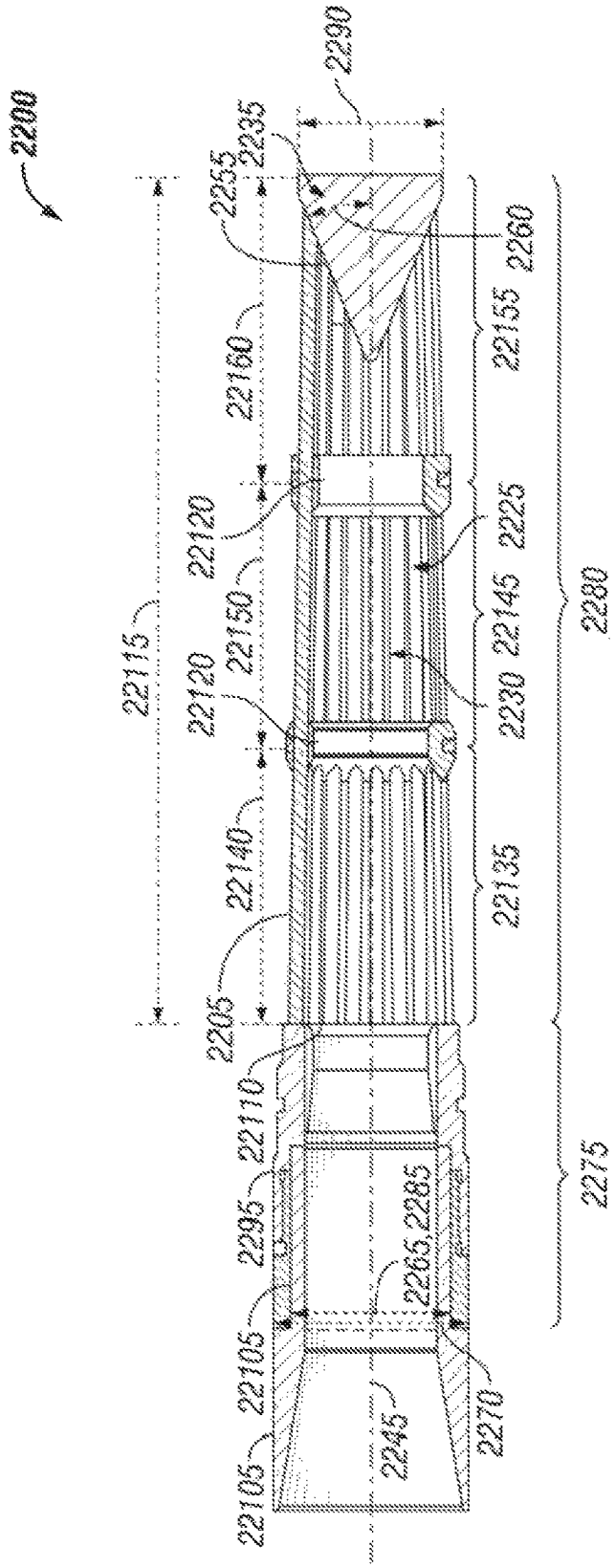
2200
2290
2235
2255
2260
22160
22155
22120
2225
22150
22145
2280
22115
22120
2230
22140
22135
2205
22110
2275
2295
2265,2285
22105
2270
2245
22105

FIG. 22B

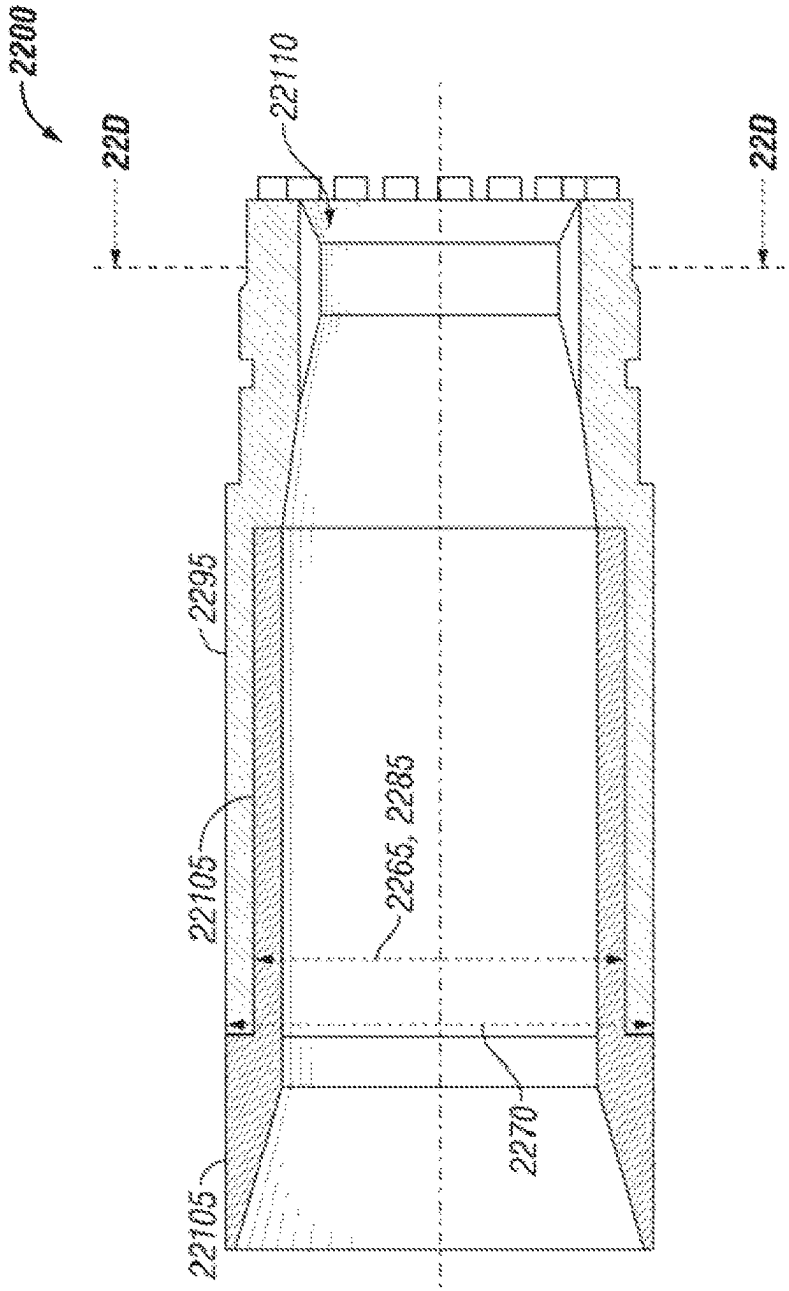

FIG. 22C

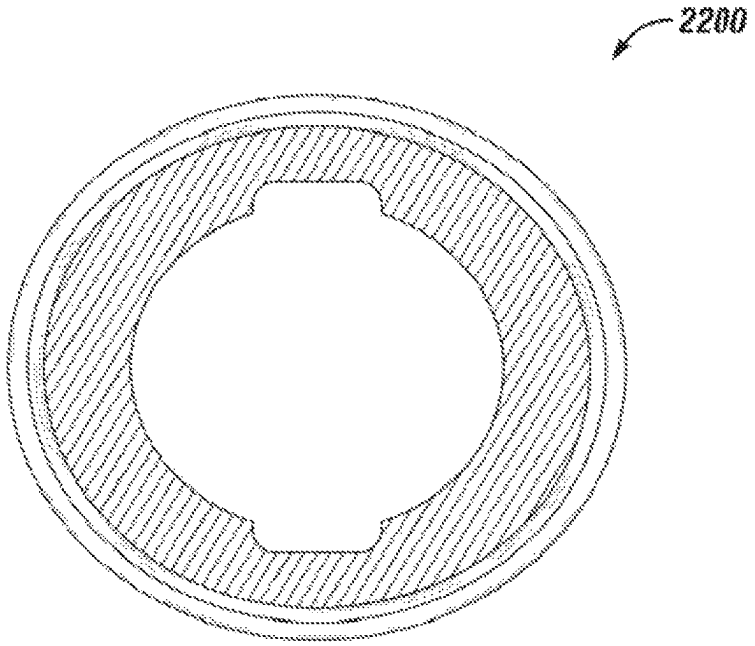

FIG. 22D

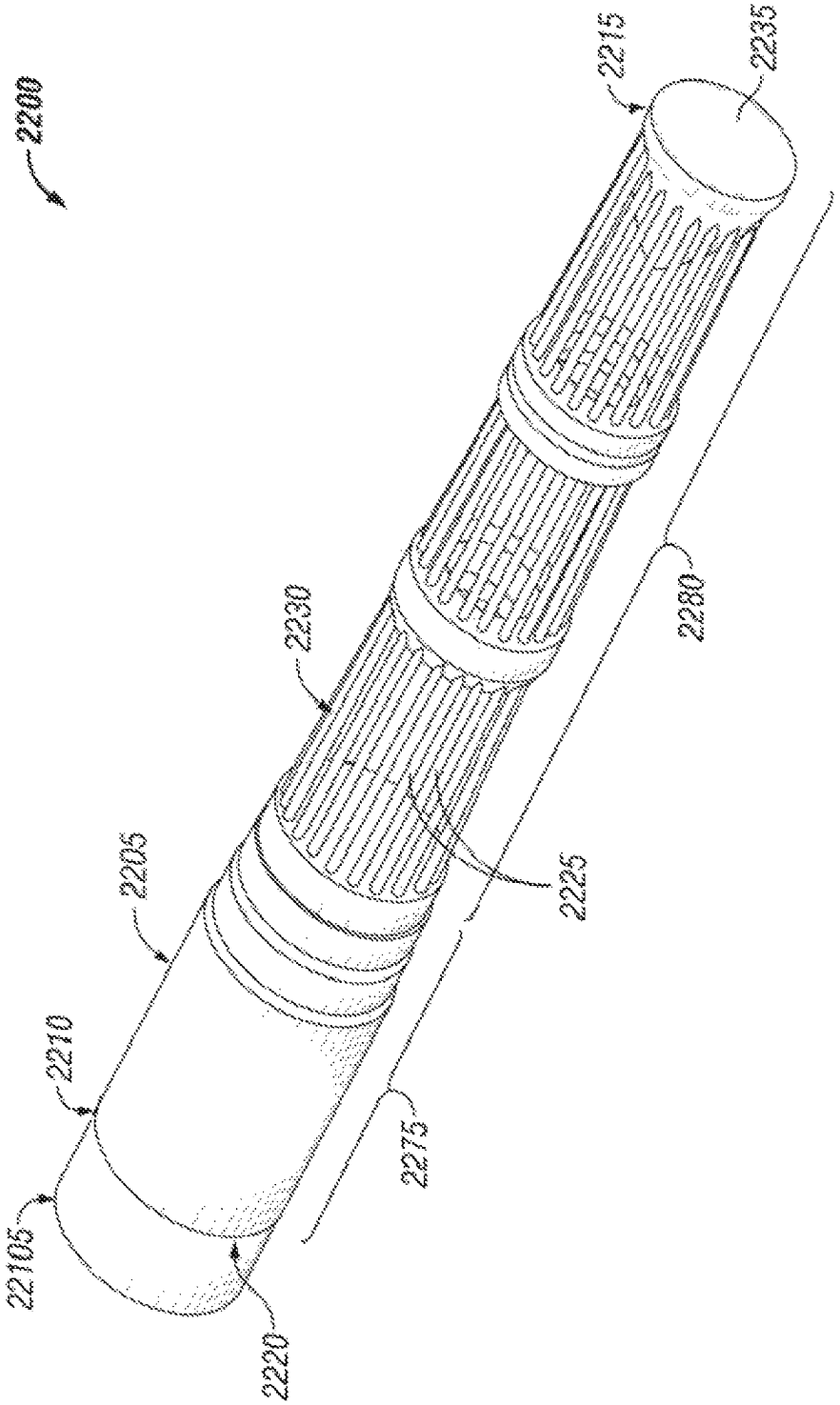

FIG. 22E

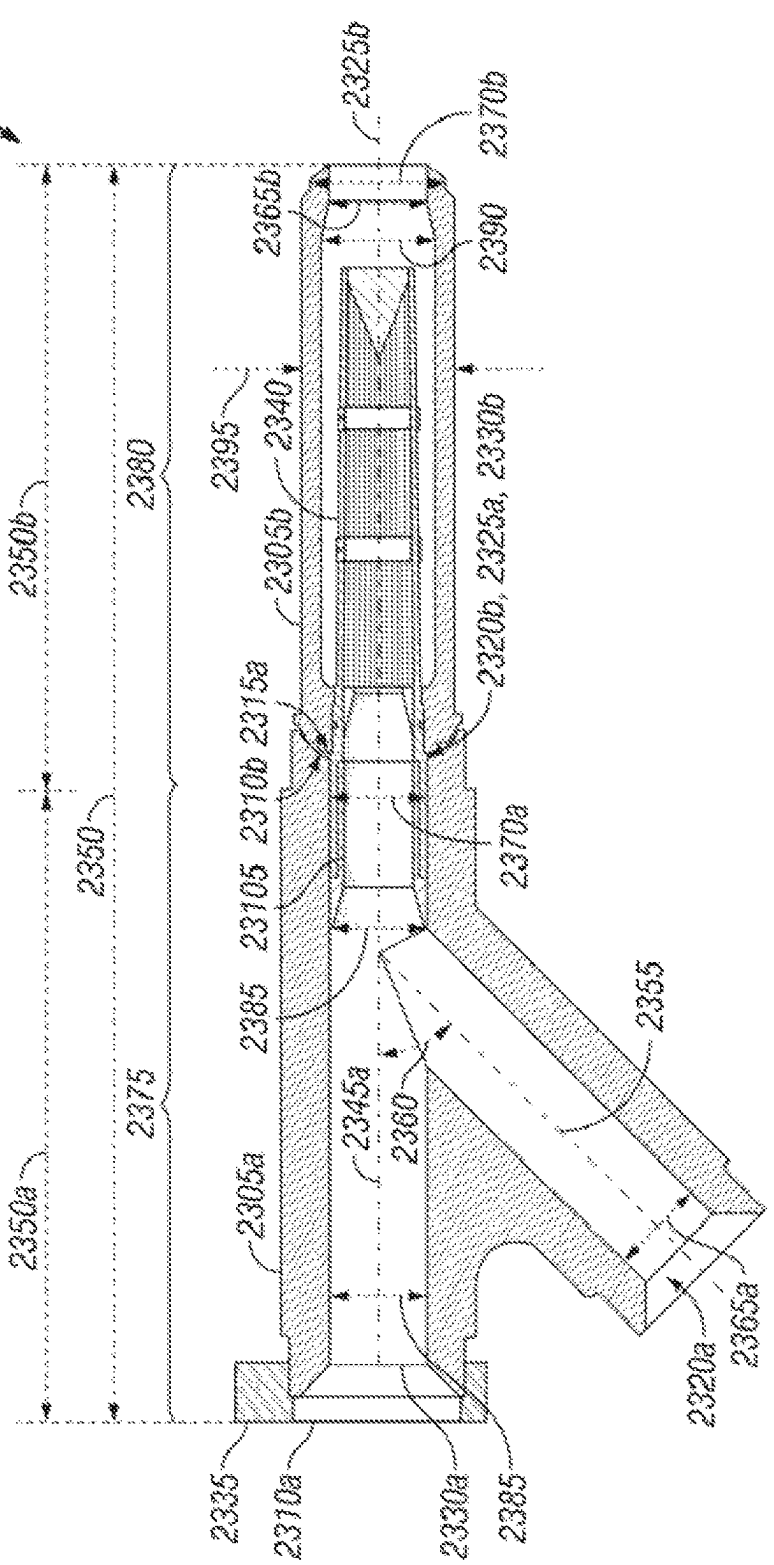
2300
2325b
2370b
2365b
2390
2395
2340
2305b
2320b, 2325a, 2330b
2315a
2310b
2370a
2350b
2350
2380
2375
2350a
2385
2345a
2360
2355
2305a
2365a
2320a
2335
2310a
2330a
2385

FIG. 23

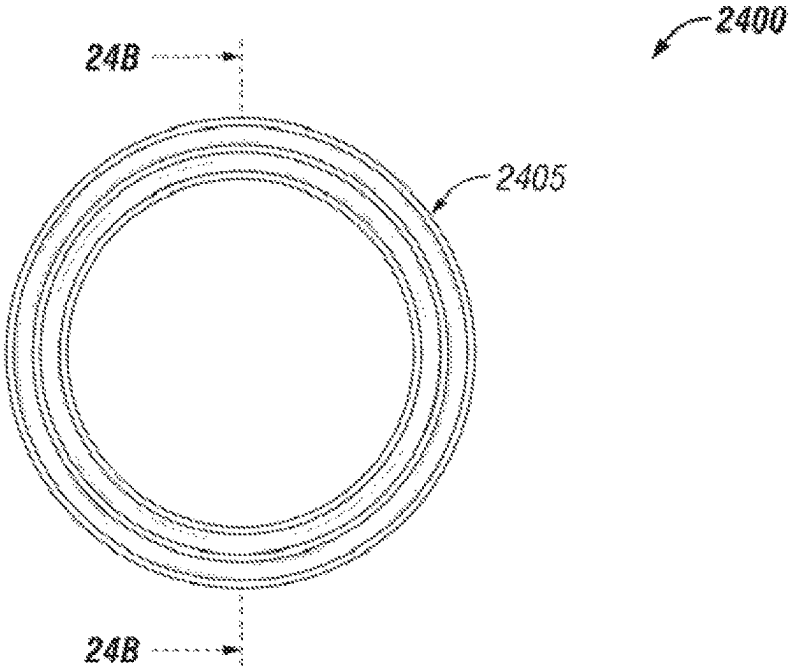

FIG. 24A

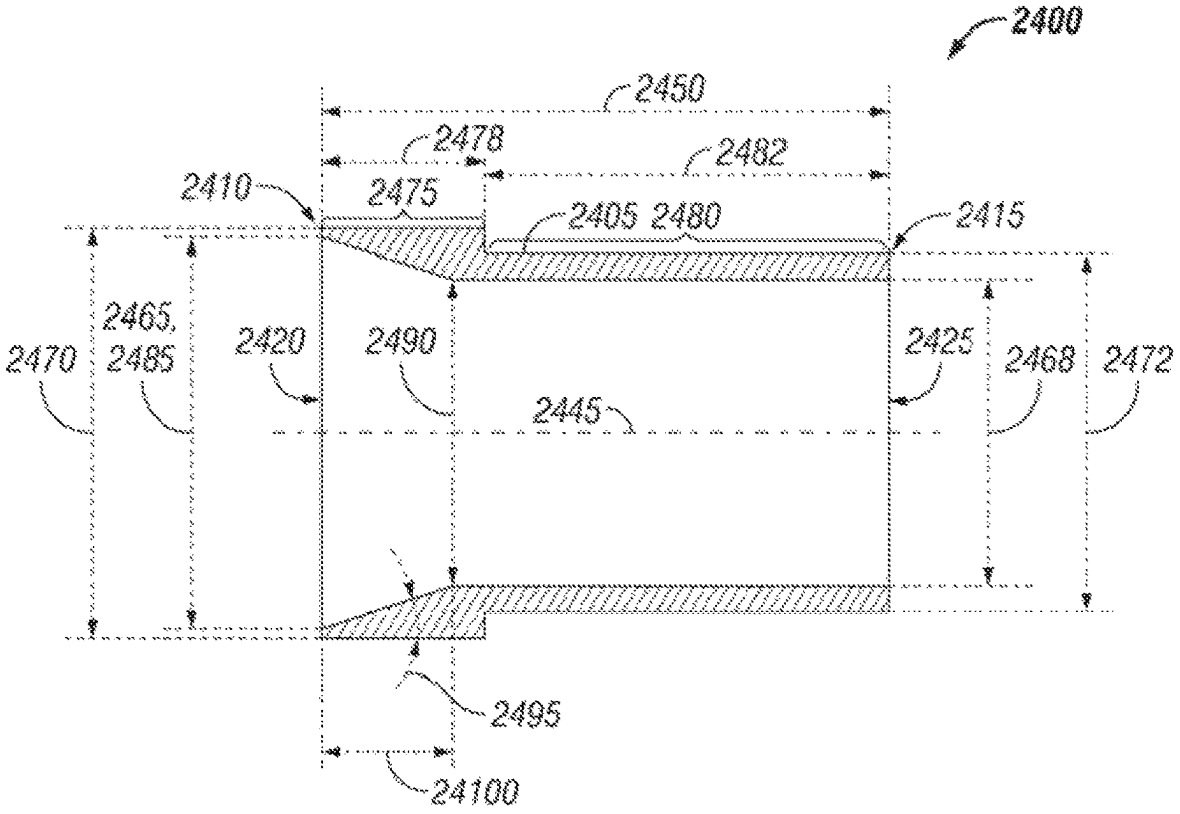
2400
2450
2478
2482
2410
2475
2405 2480
2415
2465,
2485
2470
2420
2490
2425
2468
2472
2445
2495
24100

FIG. 24B

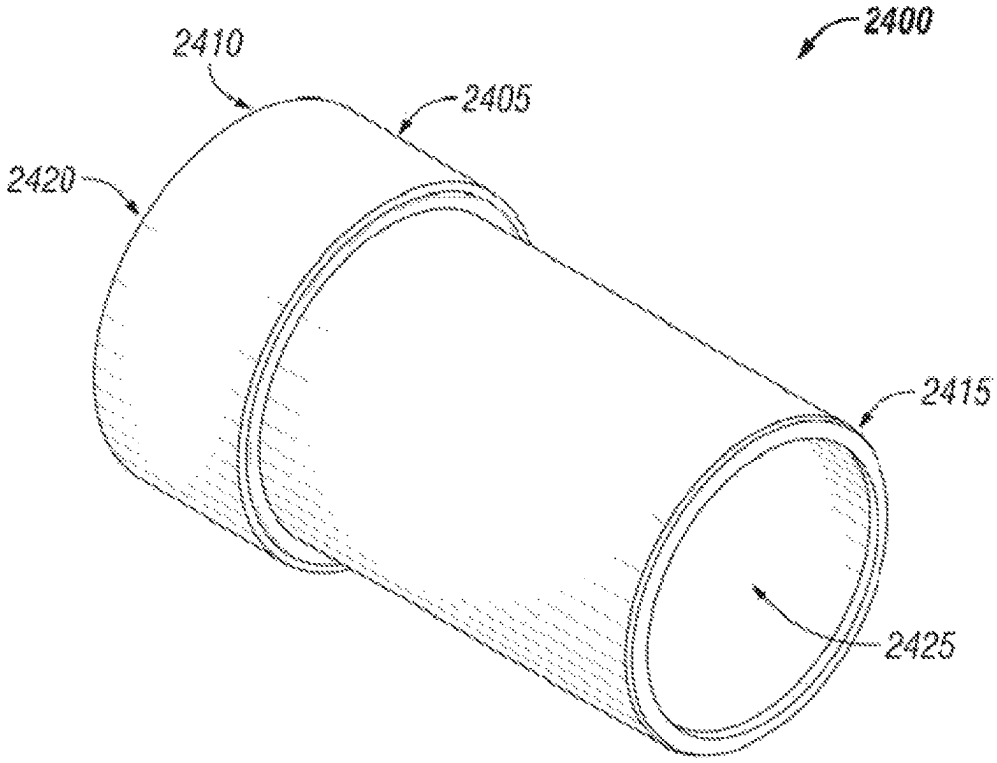

FIG. 24C

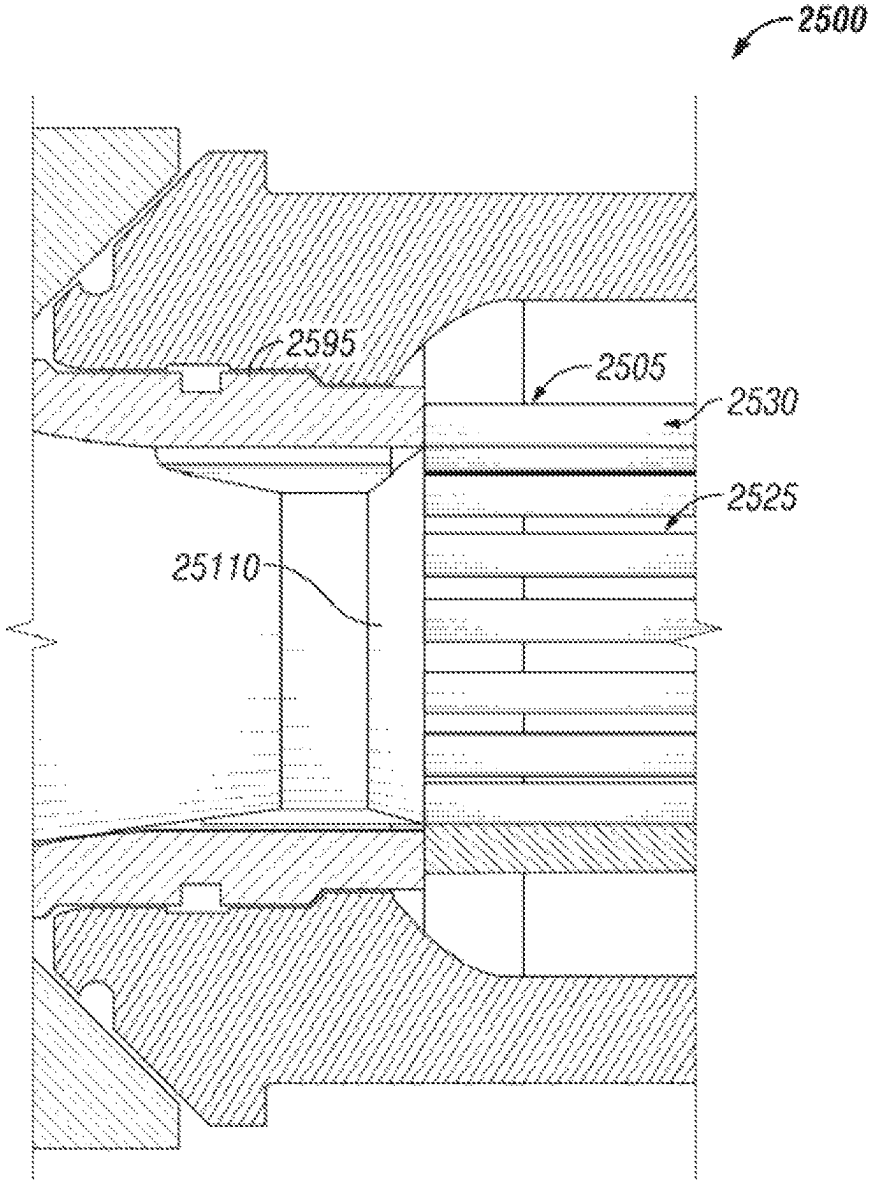

FIG. 25

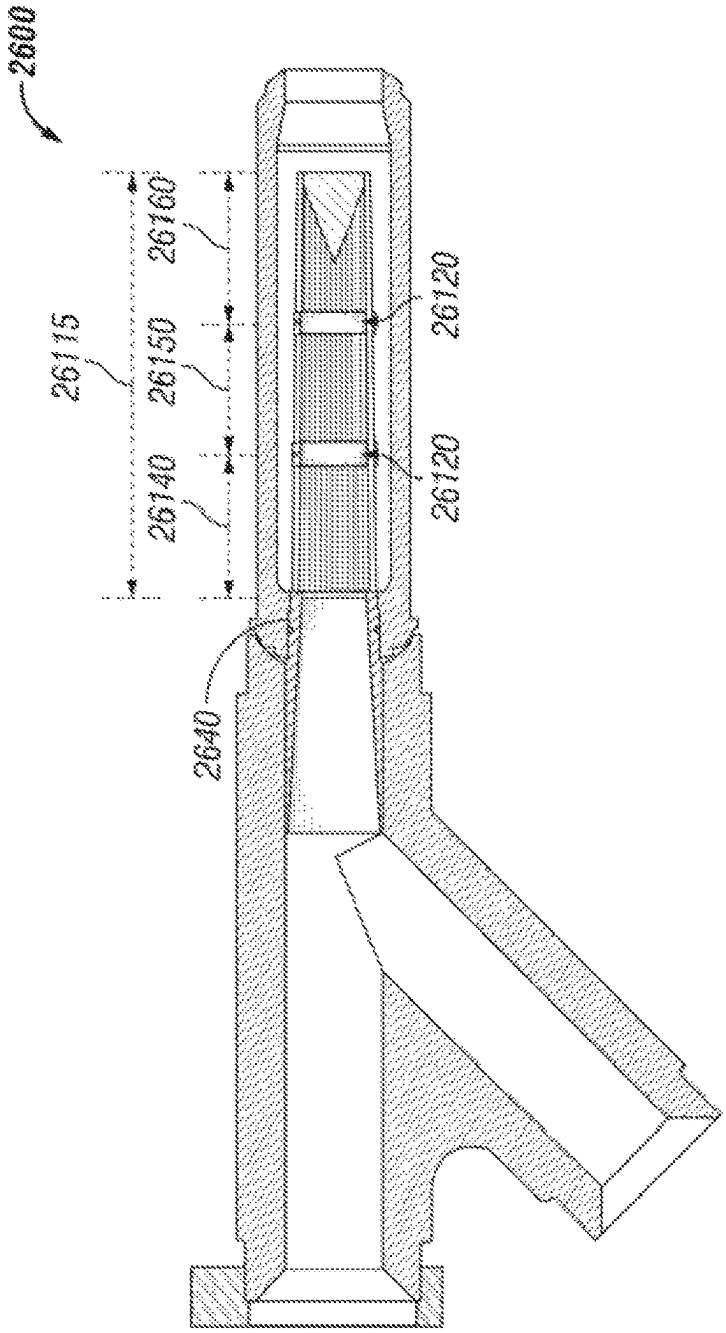

FIG. 26A

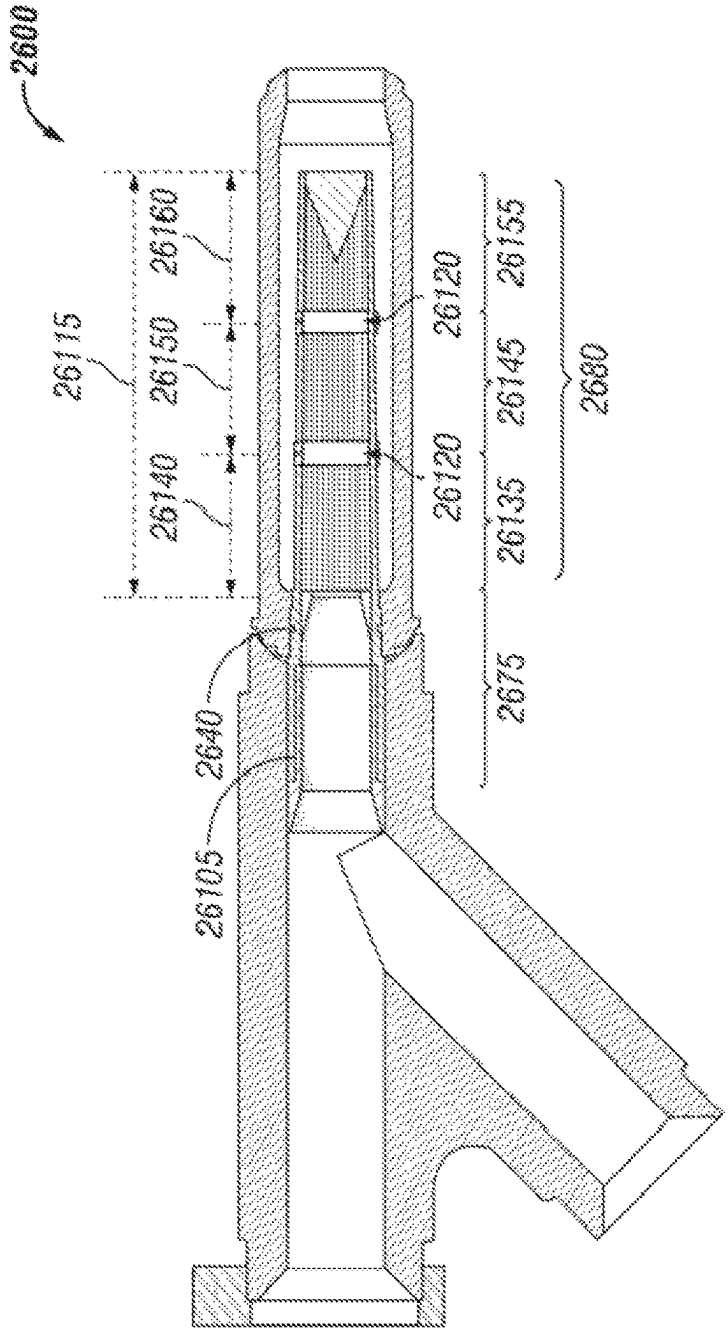
2600
26115
26160
26150
26140
26120
26120
26155
26145
26135
2680
2675
2640
26105

FIG. 26B

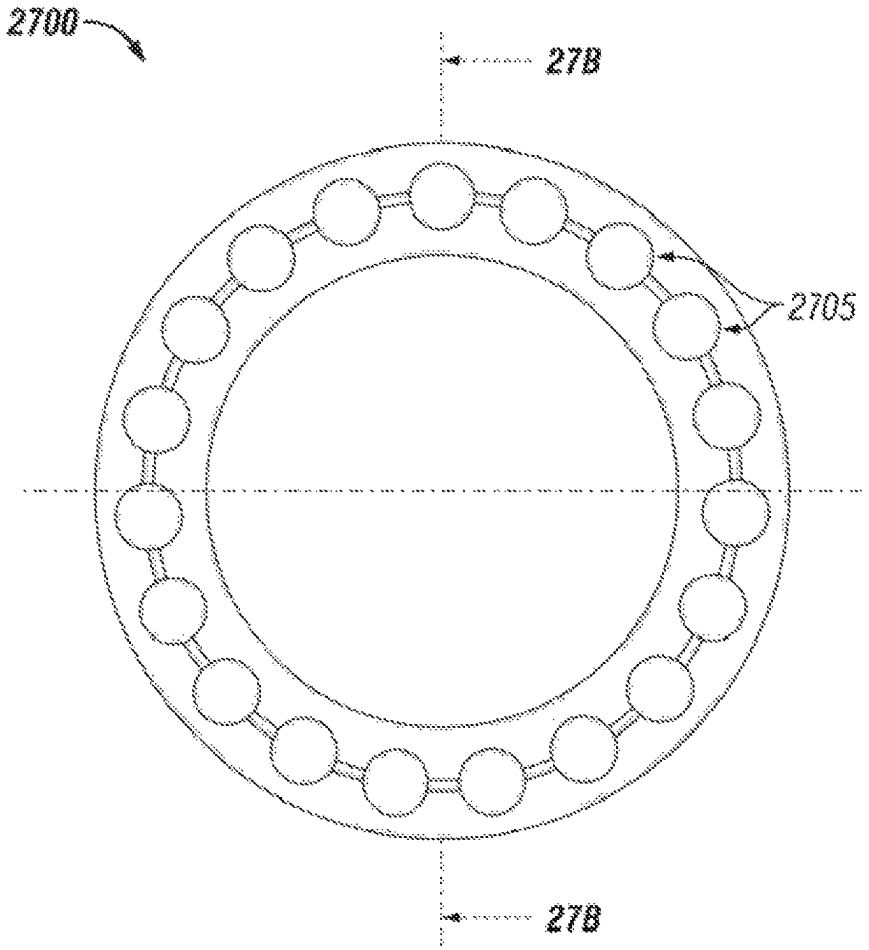

FIG. 27A

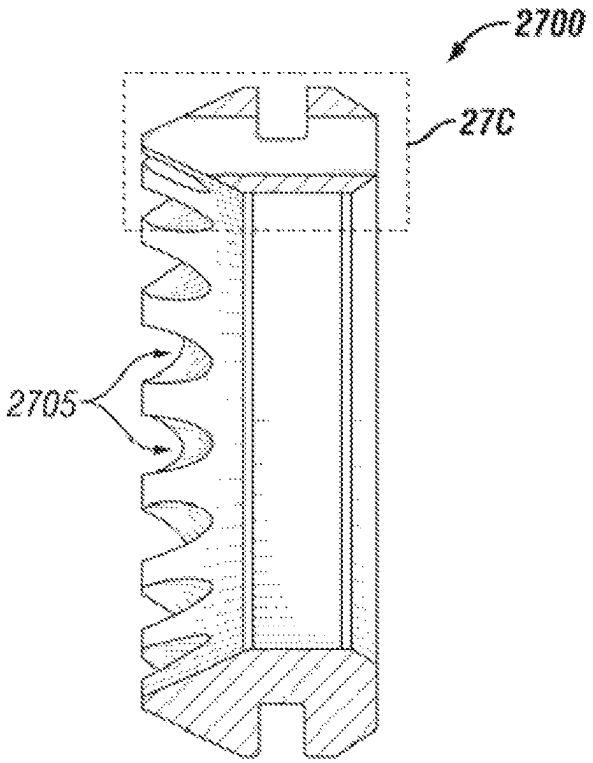

FIG. 27B

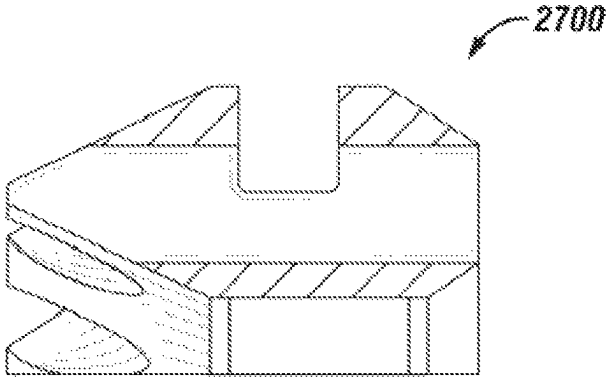

FIG. 27C

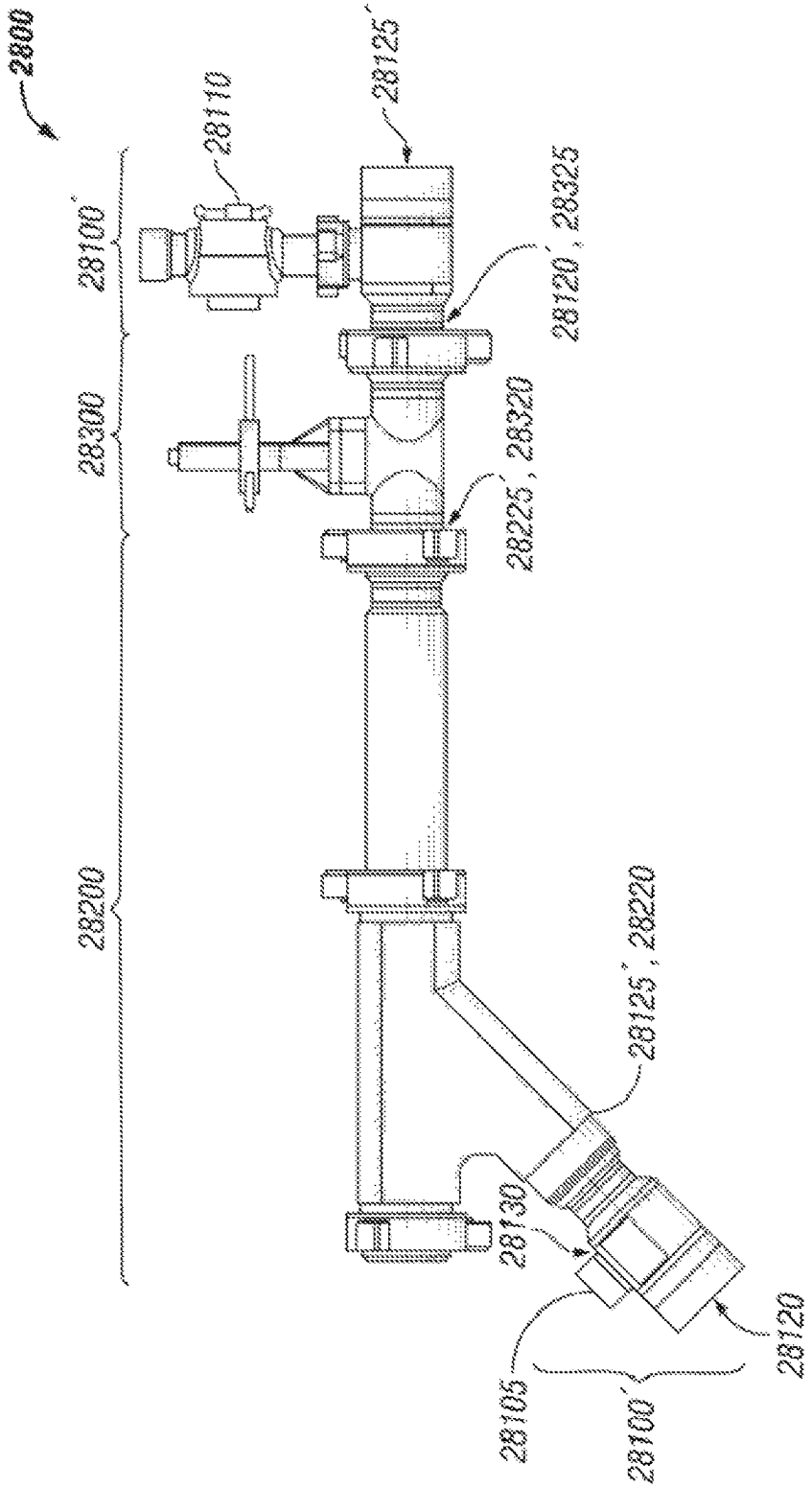
2800
28100'
28110
28125'
28120', 28325
28300
28225', 28320
28200
28125', 28220
28130
28105
28100'
28120

FIG. 28

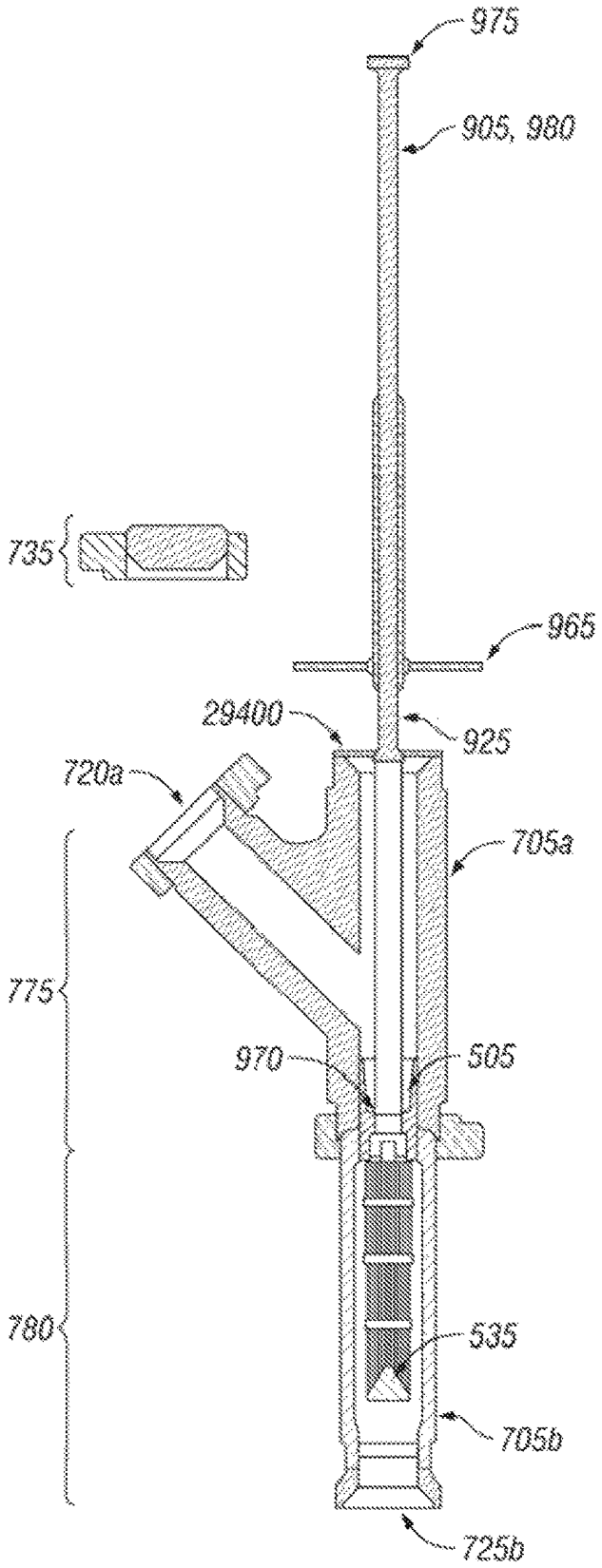
975
905, 980
735
965
29400
925
720a
705a
775
970
505
780
535
705b
725b

FIG. 29

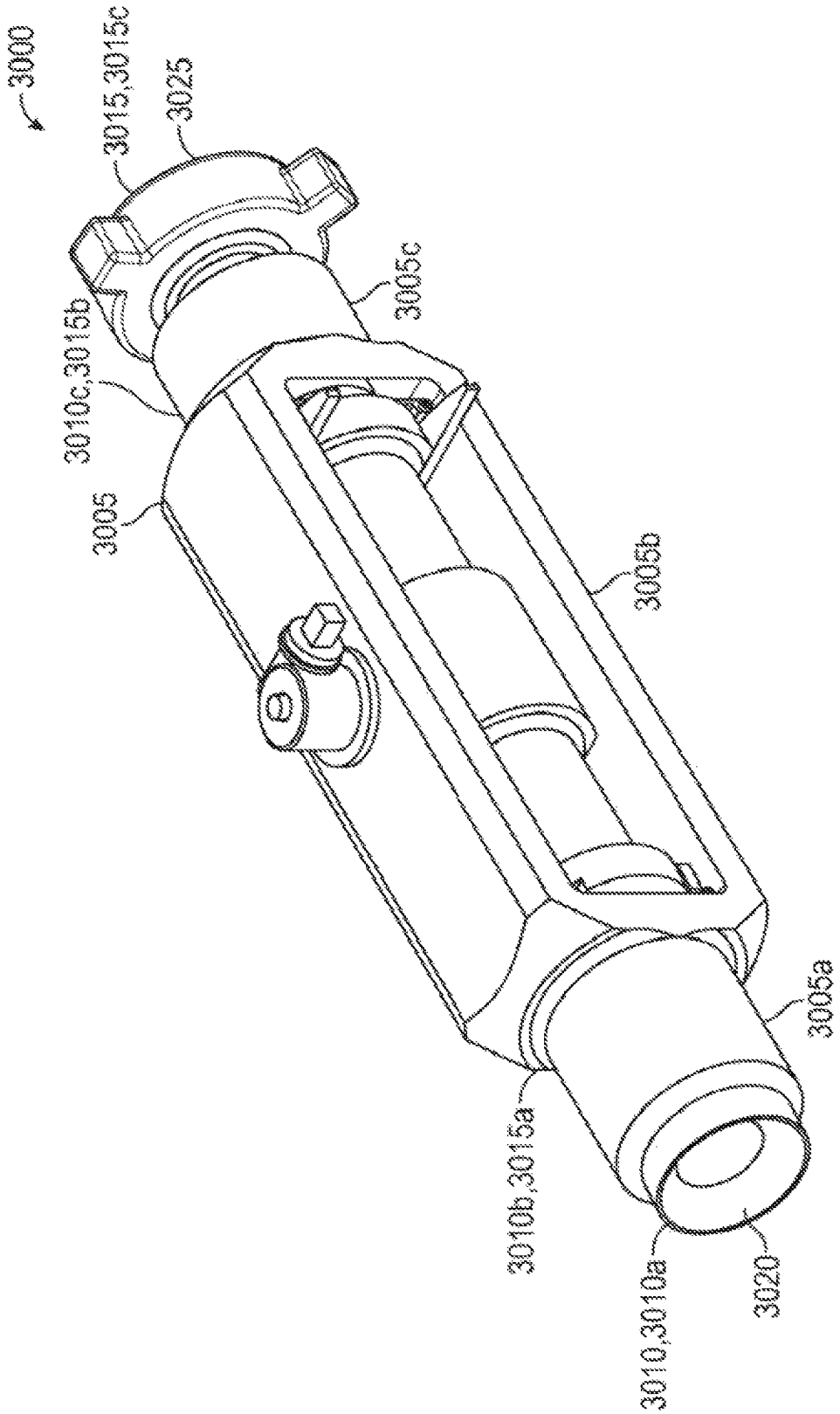
3000
3015,3015c
3025
3005c
3010c,3015b
3005
3005b
3005a
3010b,3015a
3010,3010a
3020

FIG. 30A

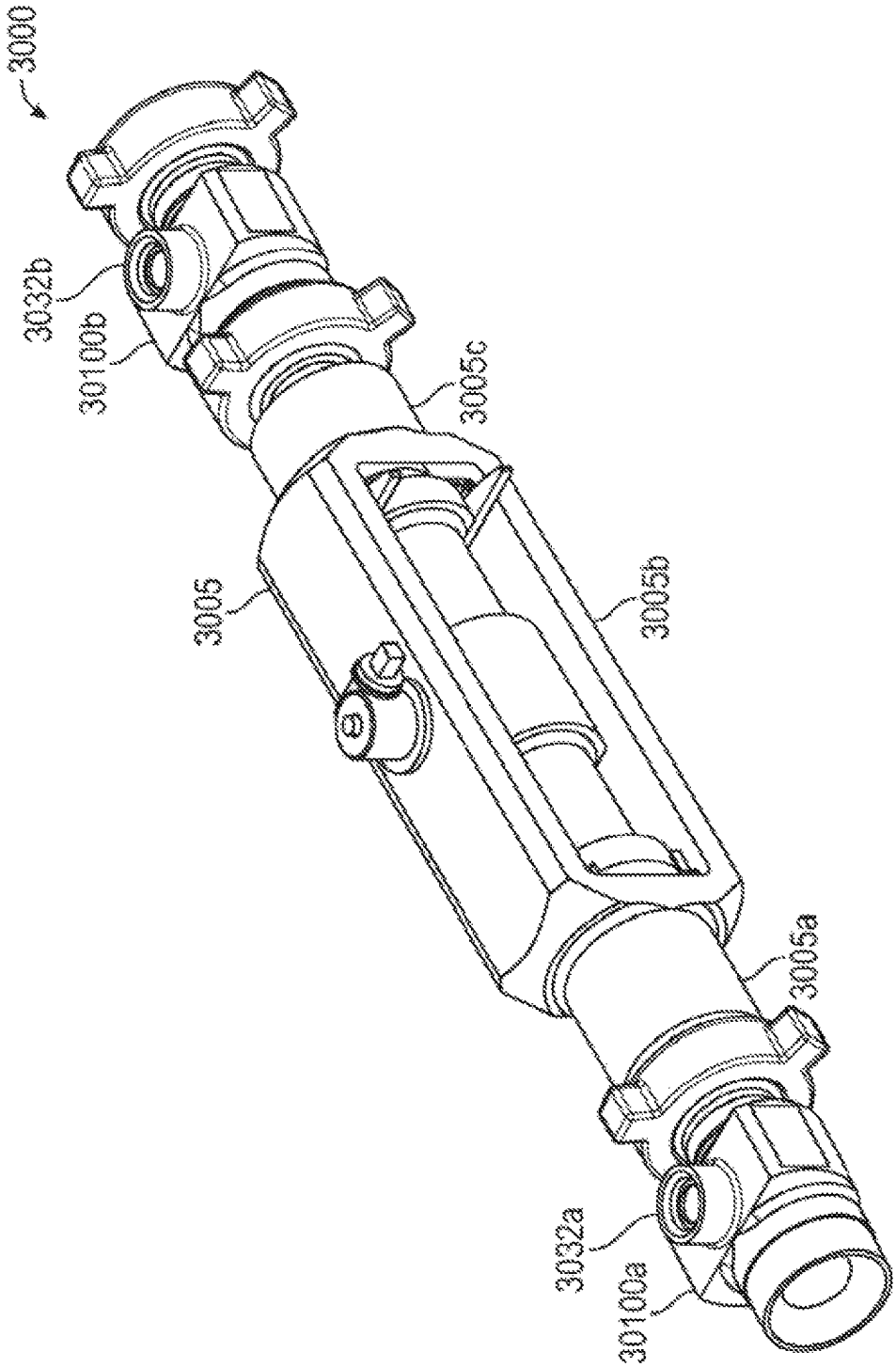

FIG. 30B

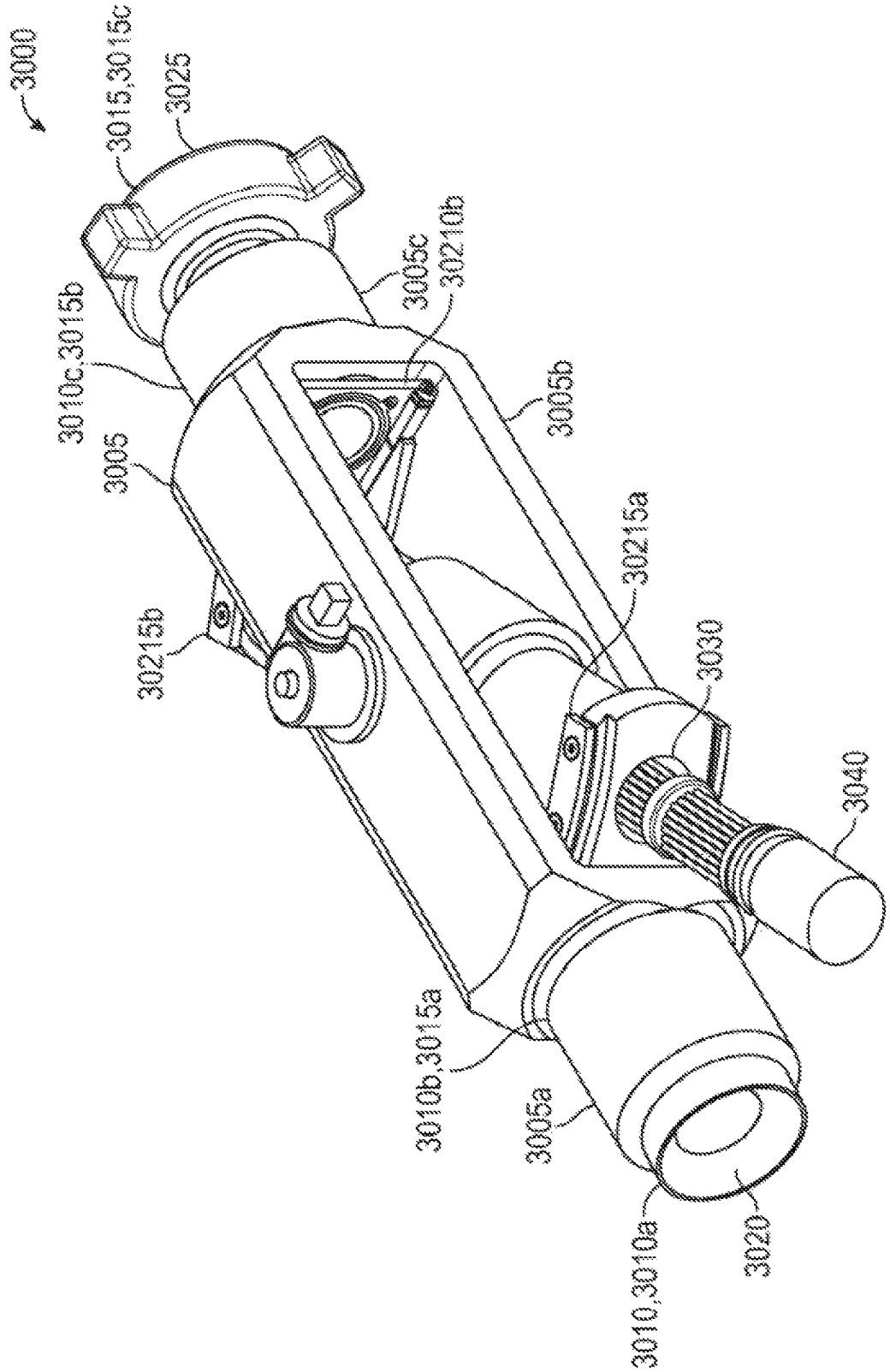
3000
3015,3015c
3025
3010c,3015b
3005
30215b
3005c
30210b
3005b
30215a
3030
3040
3010b,3015a
3005a
3010,3010a
3020

FIG. 30C

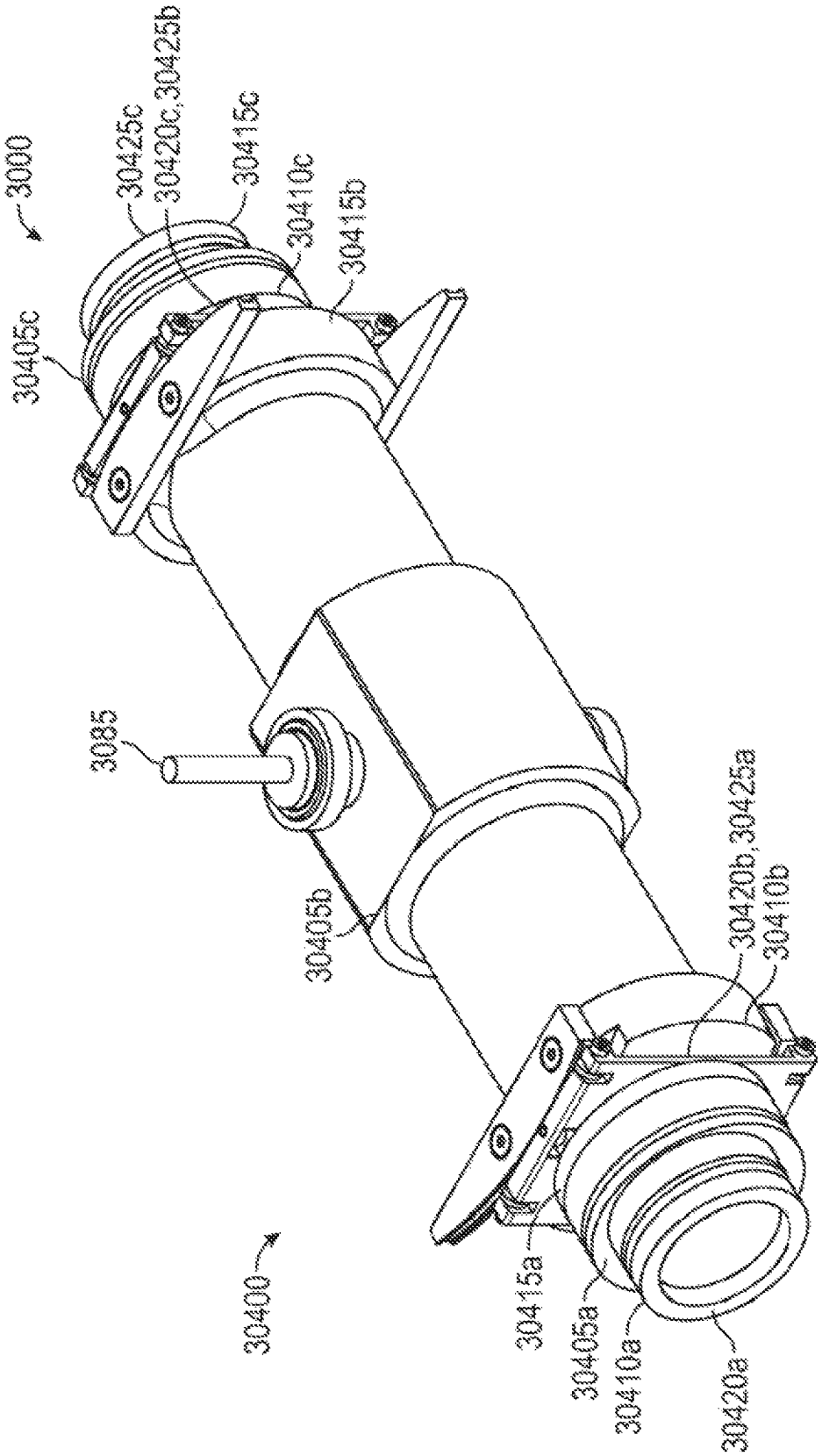
3000
30425c
30420c, 30425b
30415c
30410c
30415b
30405c
3085
30405b
30420b, 30425a
30410b
30400
30415a
30405a
30410a
30420a

FIG. 30D

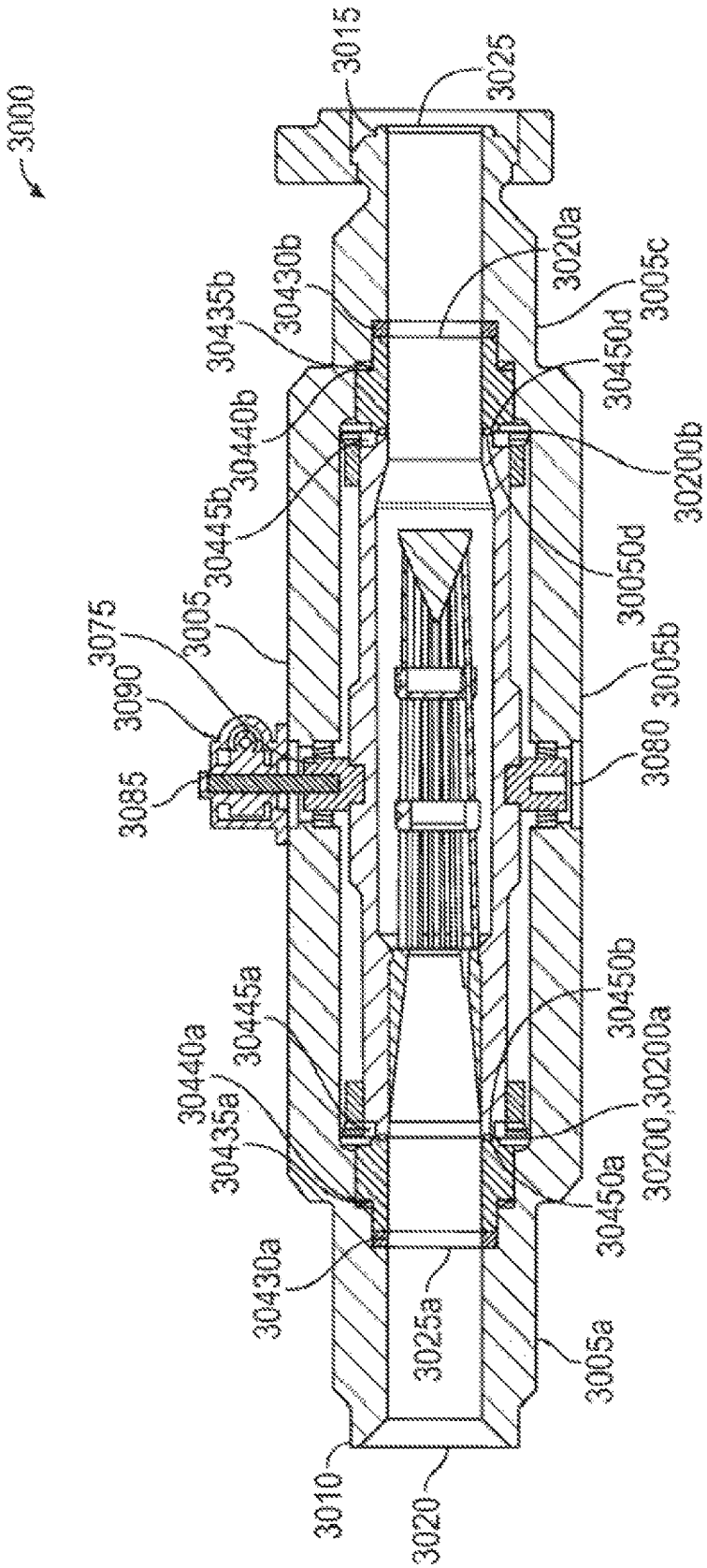
3000
3015
3025
3020a
3005c
30450d
30200b
30050d
3005b
3080
30450b
30200a
30200,30200a
30450a
3005a
3020
3010
3025a
30430a
30435a
30440a
30445a
30435b
30430b
30440b
30445b
3005
3075
3090
3085

FIG. 30E

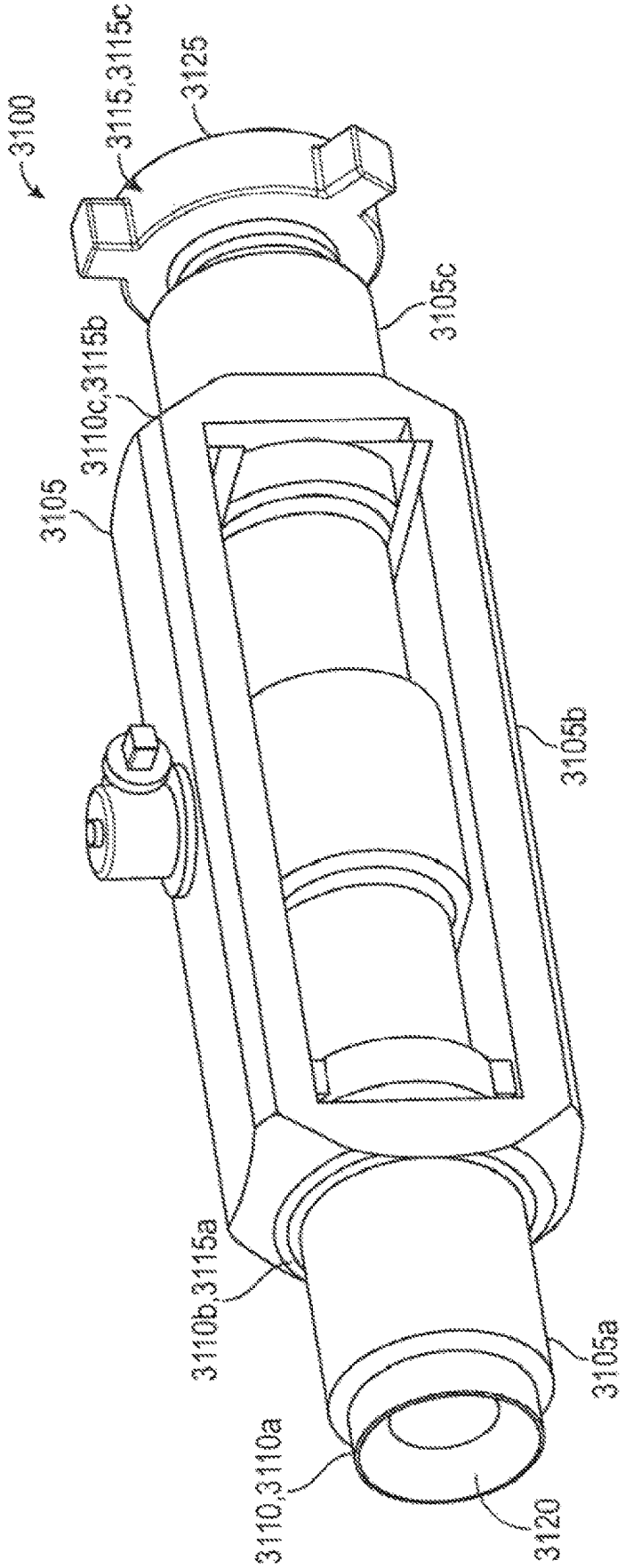
3100
3115,3115c
3125
3105c
3110c,3115b
3105
3105b
3110b,3115a
3105a
3110,3110a
3120

FIG. 31A

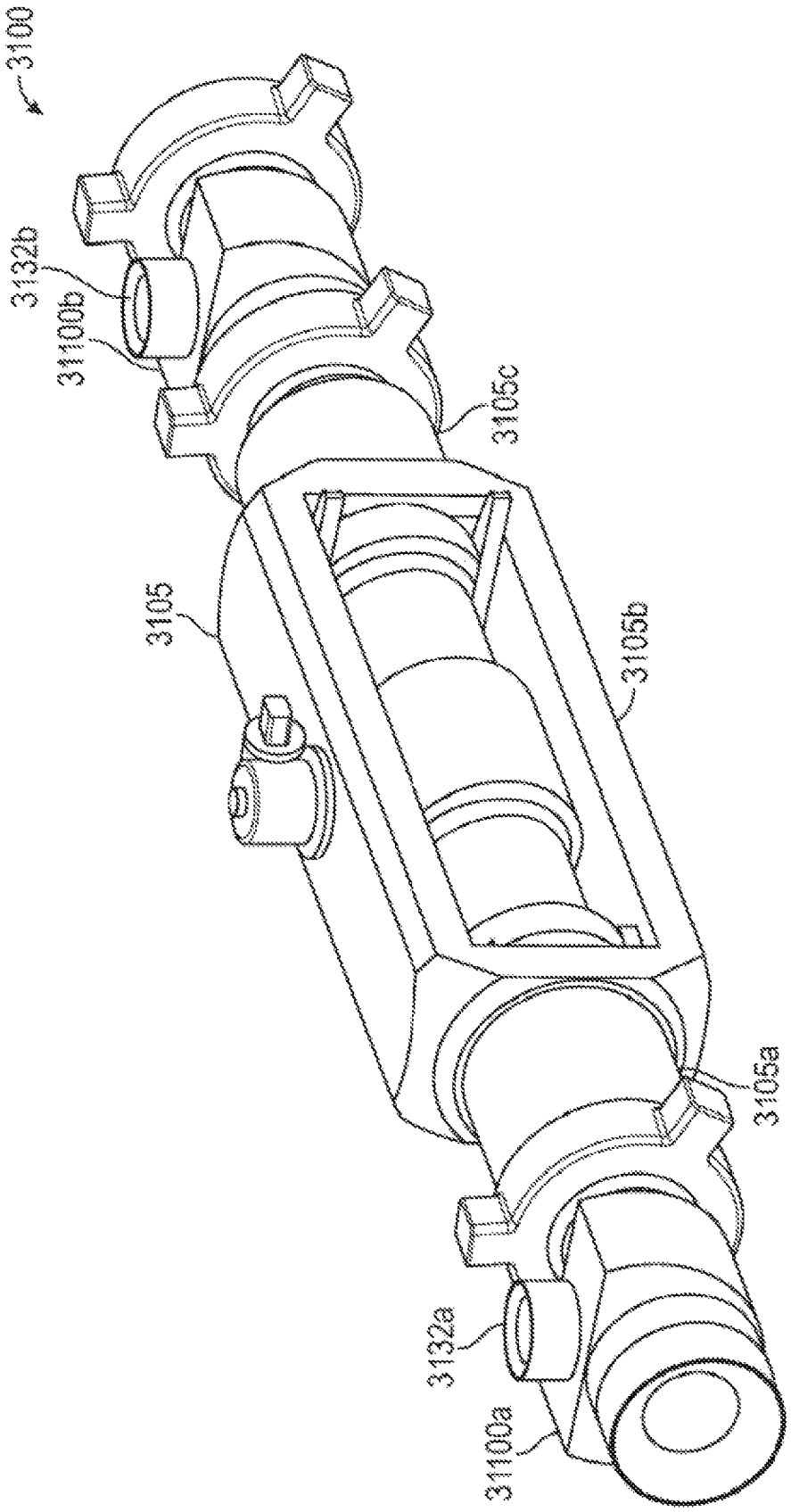

FIG. 31B

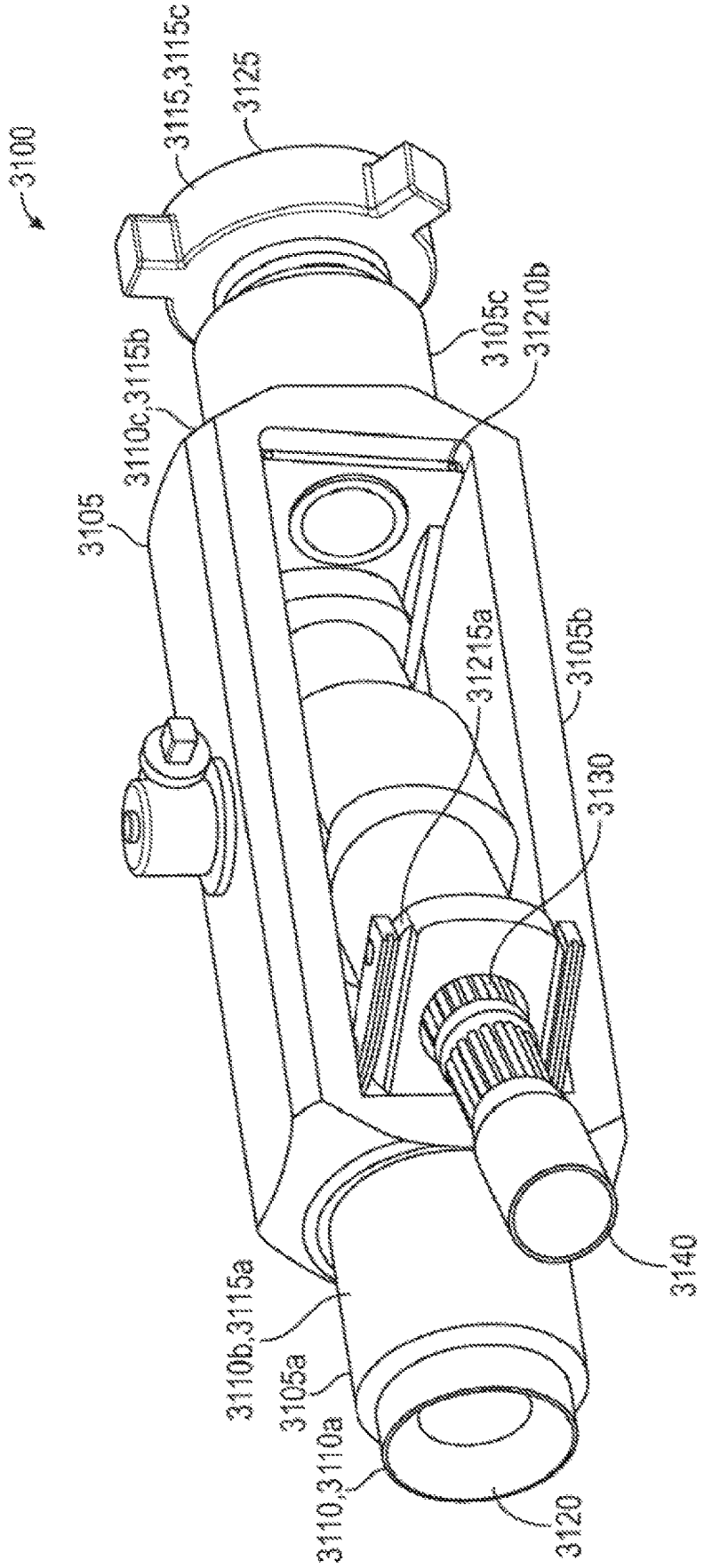
3100
3115,3115c
3125
3105c
31210b
3110c,3115b
3105
31215a
3105b
3130
3140
3110b,3115a
3105a
3110,3110a
3120

FIG. 31C

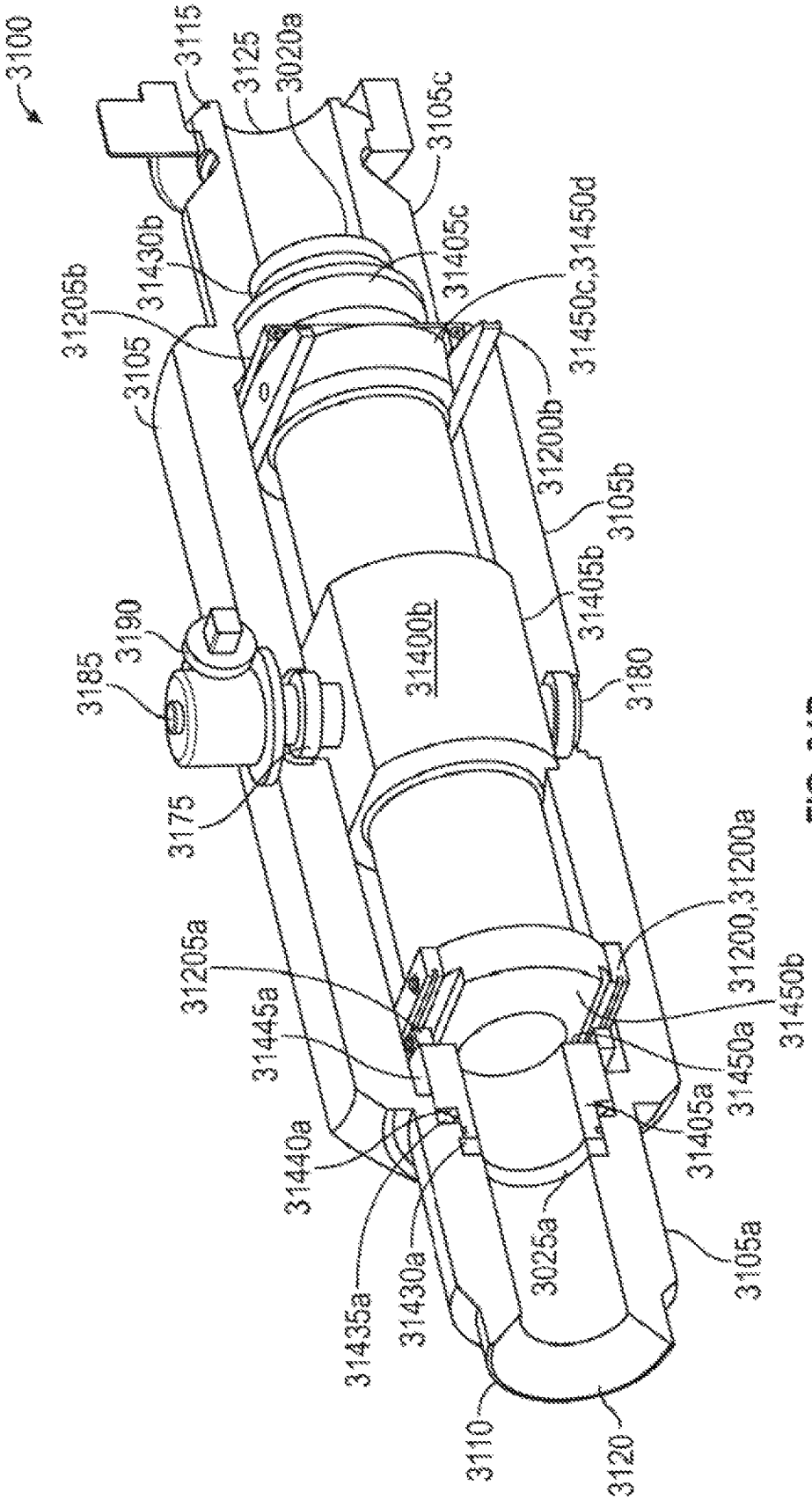
3100
3115
3125
3020a
3105c
31430b
31205b
3105
31405c
31450c,31450d
31200b
3105b
31405b
31400b
3190
3185
3180
3175
31200,31200a
31205a
31445a
31450b
31450a
31405a
31440a
31430a
31435a
3025a
3105a
3110
3120

FIG. 31D

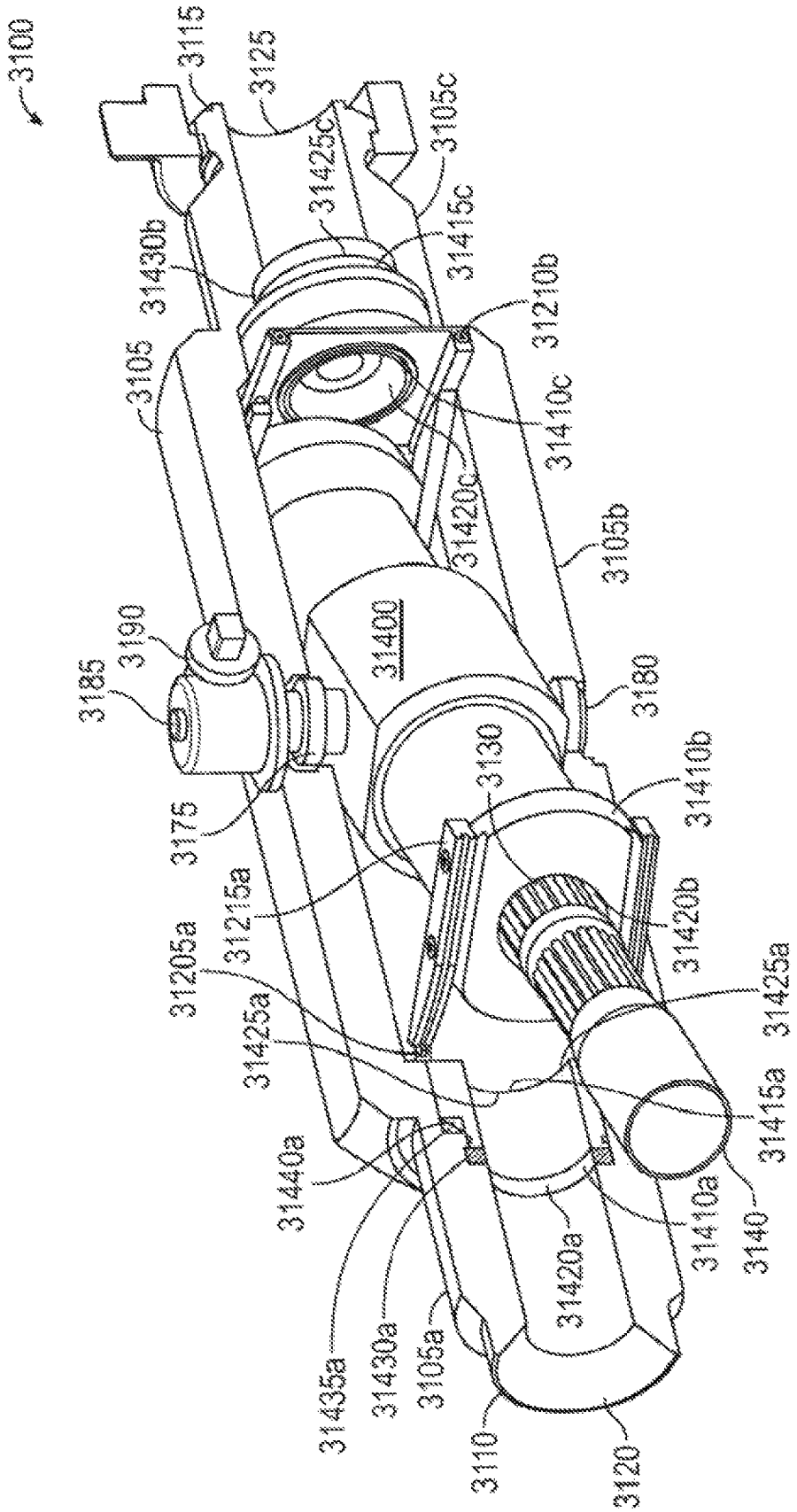
3100
3115
3125
3105c
31425c
31415c
31430b
31210b
3105
31410c
31420c
3105b
31400
3190
3185
3180
3130
31410b
3175
31215a
31420b
31205a
31425a
31425a
31415a
31440a
31410a
3140
31420a
31435a
31430a
3105a
3110
3120

FIG. 31E

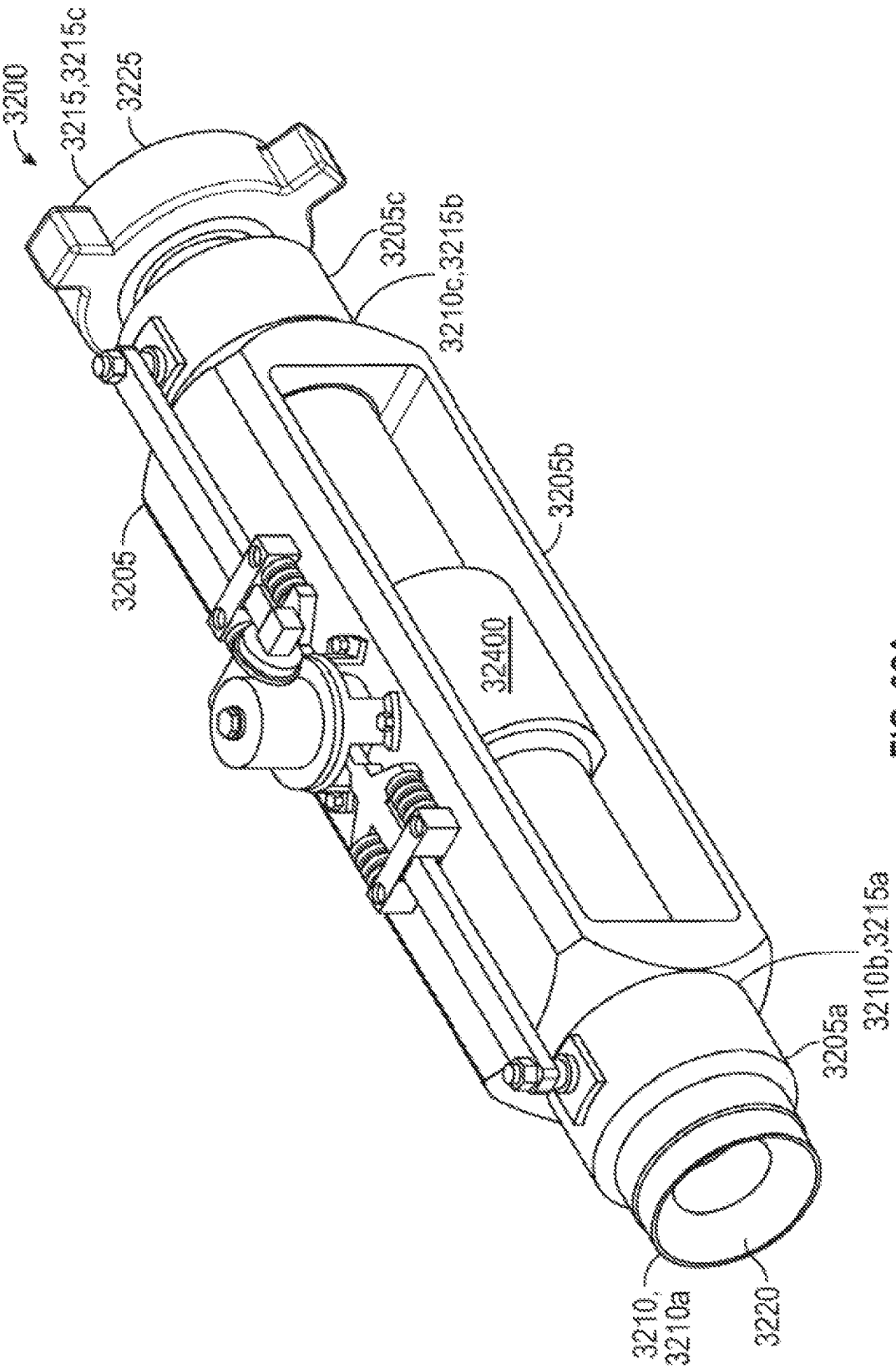
3200
3215,3215c
3225
3205c
3210c,3215b
3205b
3205
32400
3210b,3215a
3205a
3210,
3210a
3220

FIG. 32A

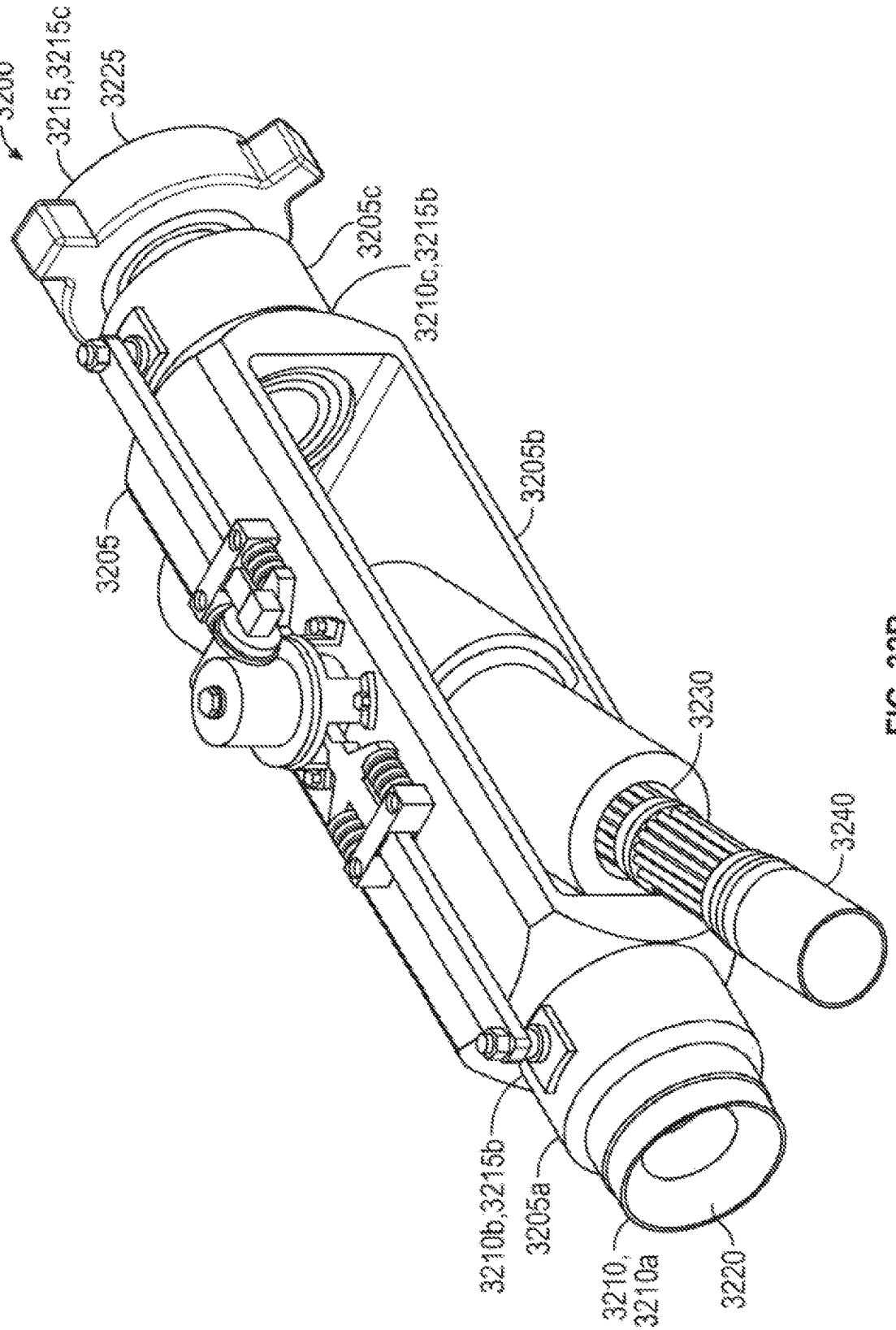
3200
3215,3215c
3225
3205c
3210c,3215b
3205b
3205
3230
3240
3210b,3215b
3205a
3210,
3210a
3220

FIG. 32B

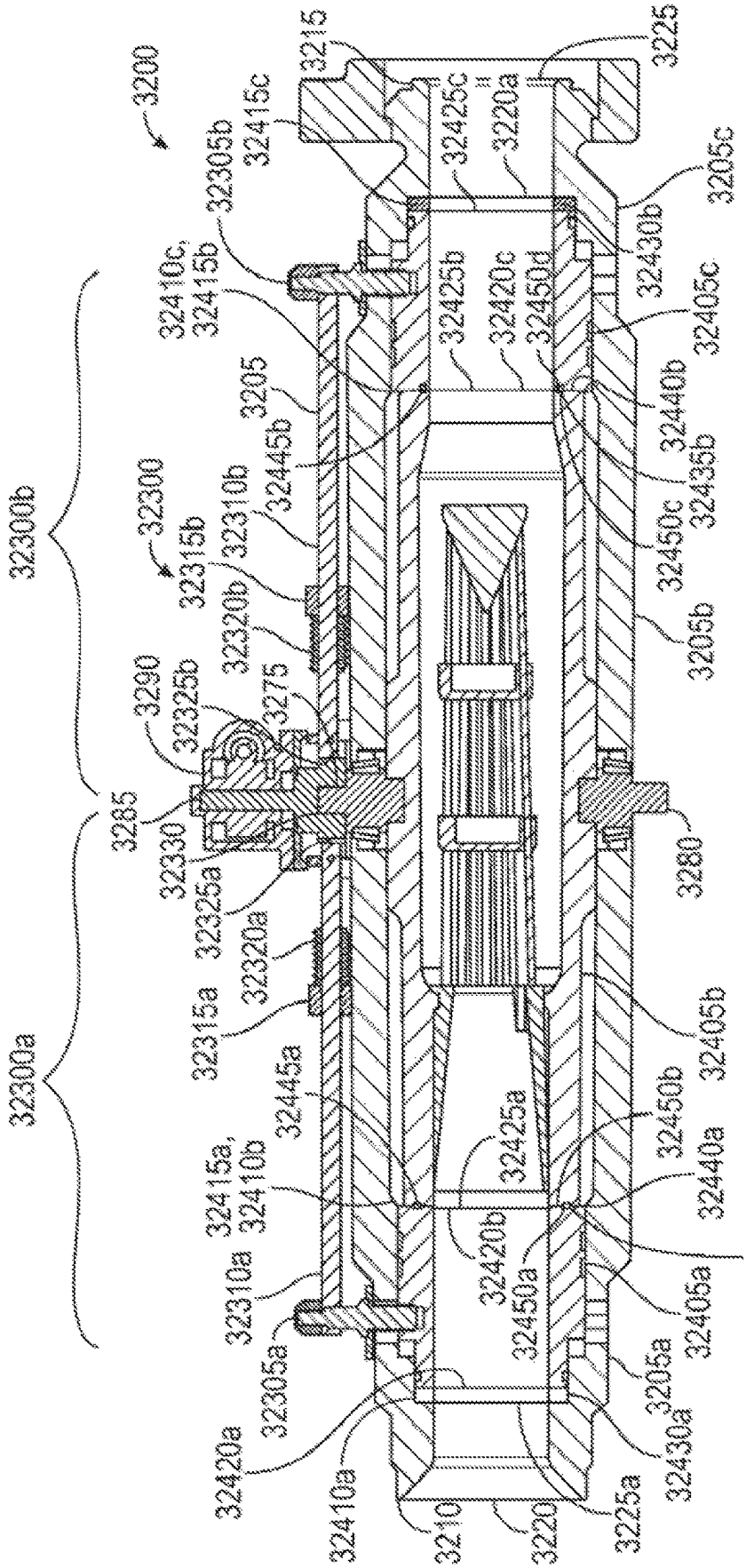
3200
3215
3225
32415c
32425c
3220a
32305b
3205c
32410c,
32415b
32425b
32420c
32450d
32430b
32405c
3205
32445b
32440b
32300b
32300
32310b
32435b
32315b
32450c
32320b
3205b
3290
32325b
3275
3285
32330
32325a
3280
32320a
32315a
32405b
32300a
32445a
32450b
32425a
32415a,
32410b
32440a
32420b
32435a
32310a
32450a
32405a
32305a
3205a
32420a
32430a
32410a
3210
3220
3225a

FIG. 32C

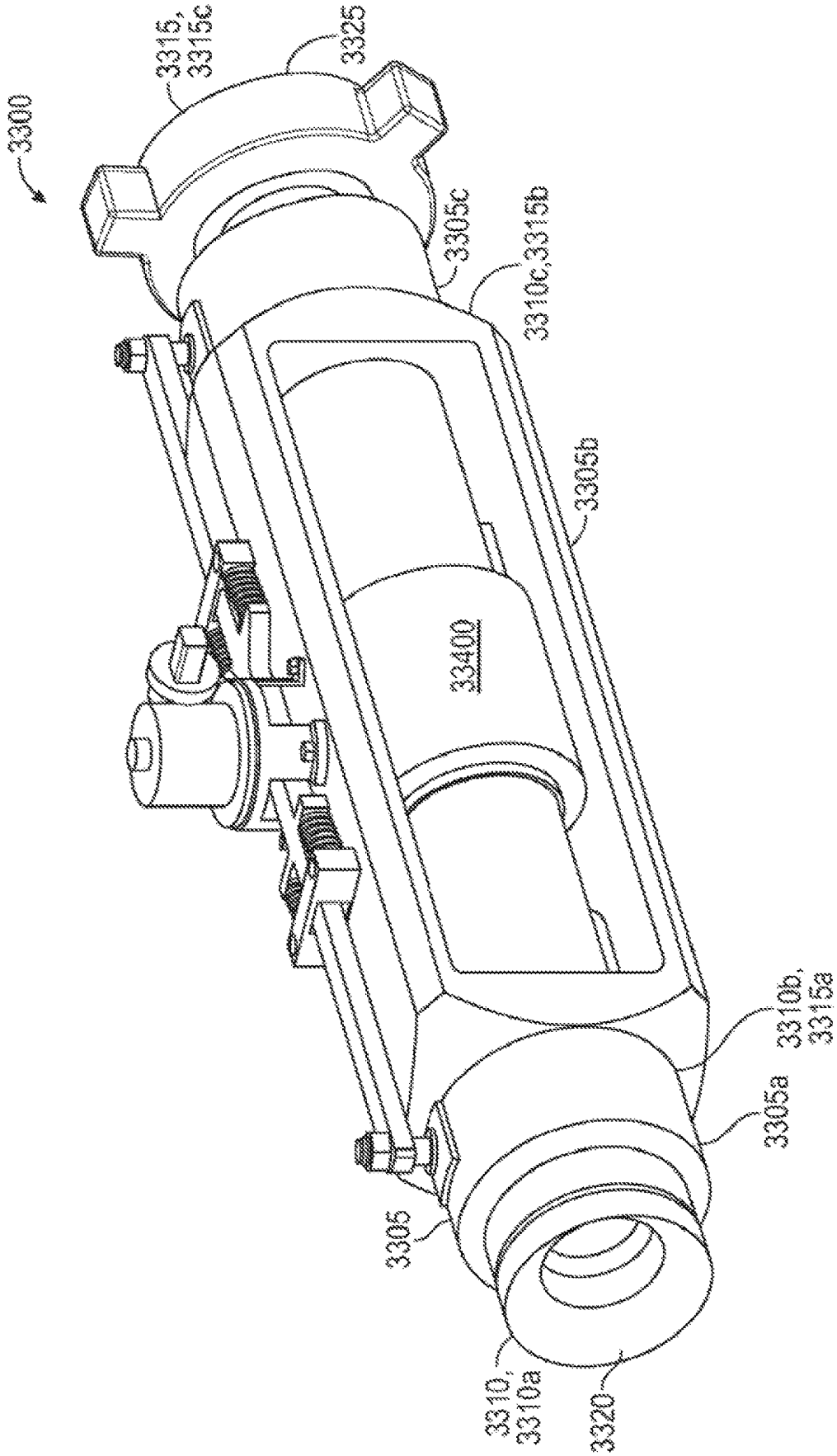
3300
3315,
3315c
3325
3305c
3310c,3315b
3305b
33400
3310b,
3315a
3305a
3305
3310,
3310a
3320

FIG. 33A

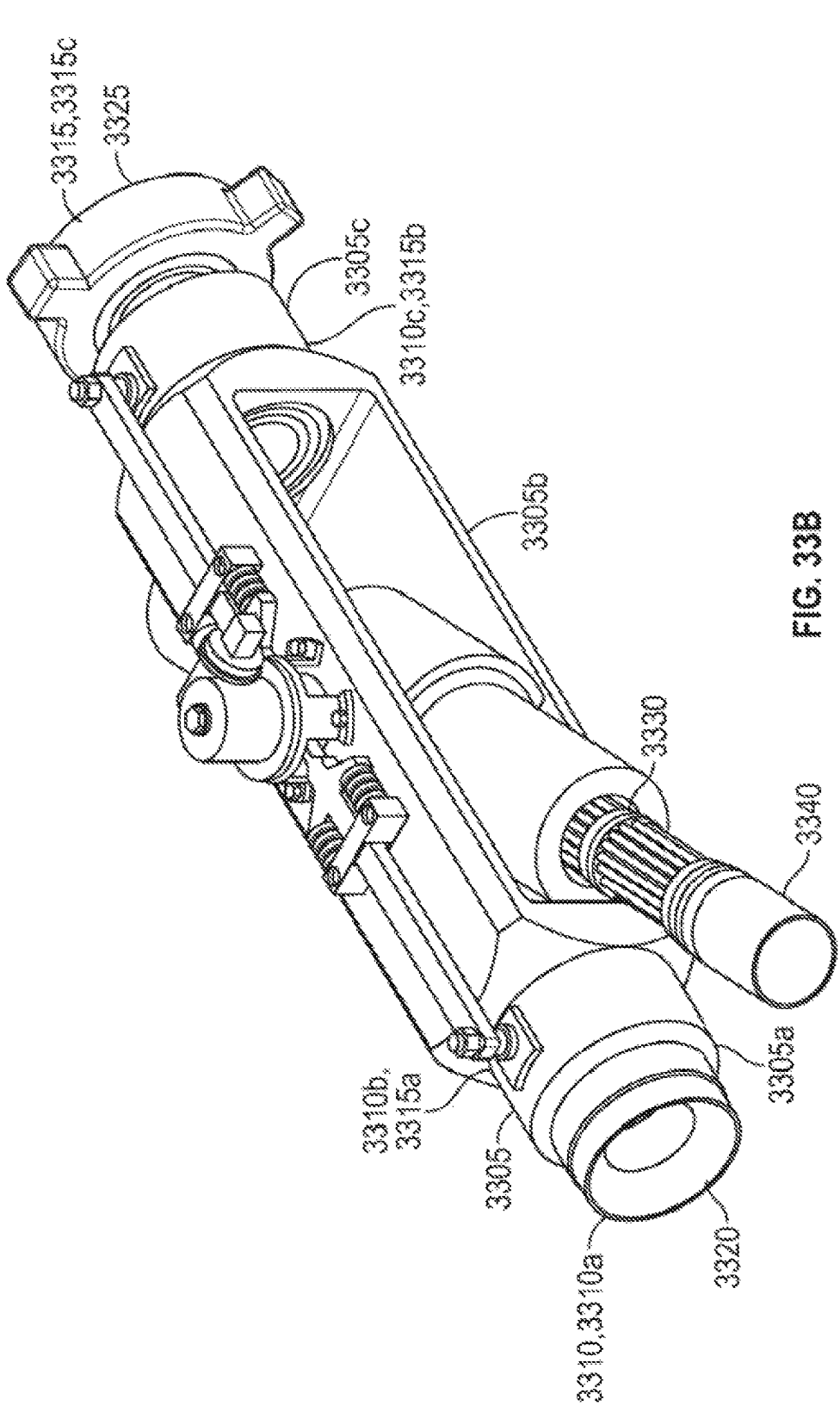
3300
3315,3315c
3325
3305c
3310c,3315b
3305b
3330
3340
3305a
3310b,
3315a
3305
3310,3310a
3320

FIG. 33B

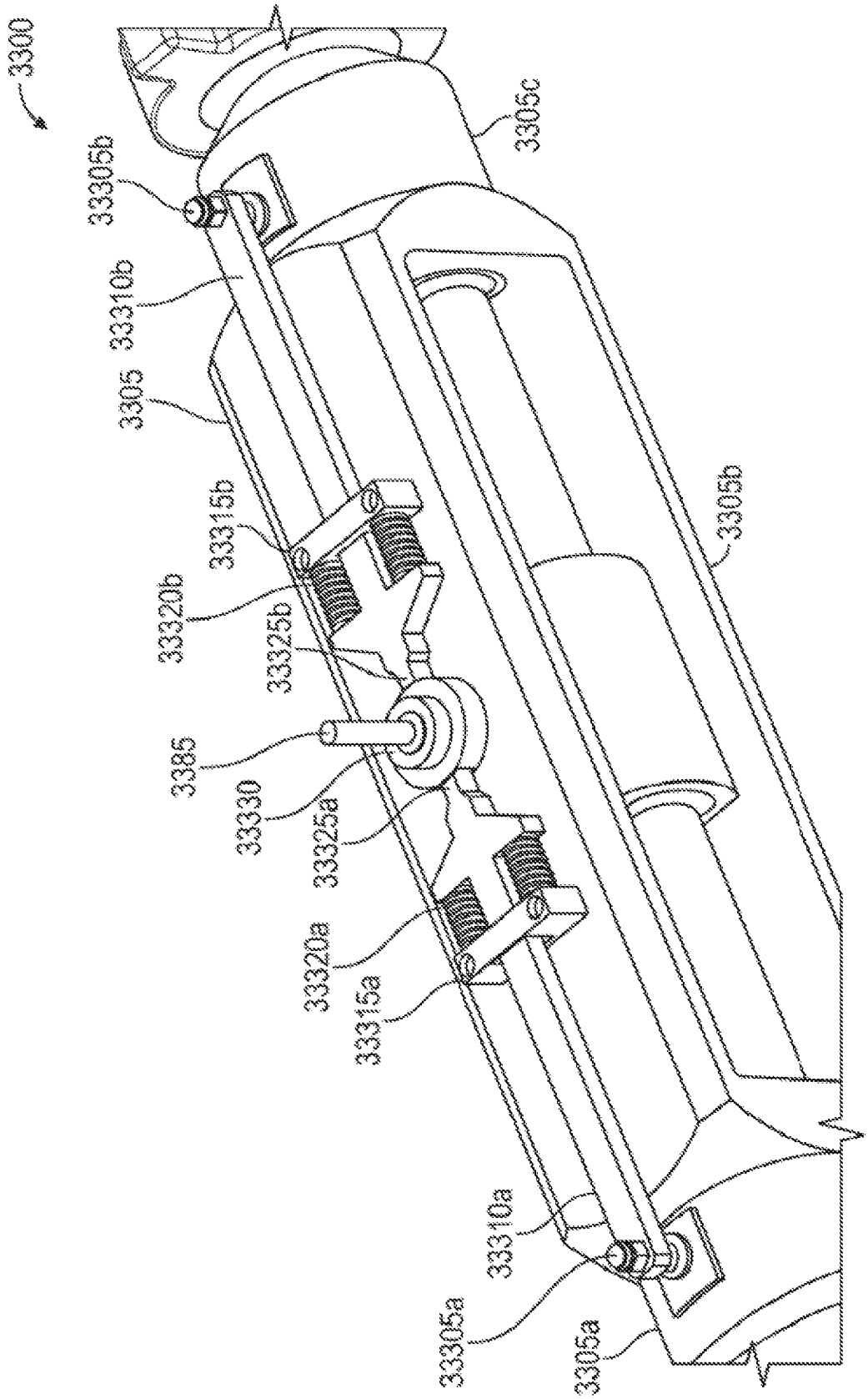
3300
33305b
33310b
3305
33315b
33320b
33325b
3385
33330
33325a
33320a
33315a
33310a
33305a
3305a
3305c
3305b

FIG. 33C

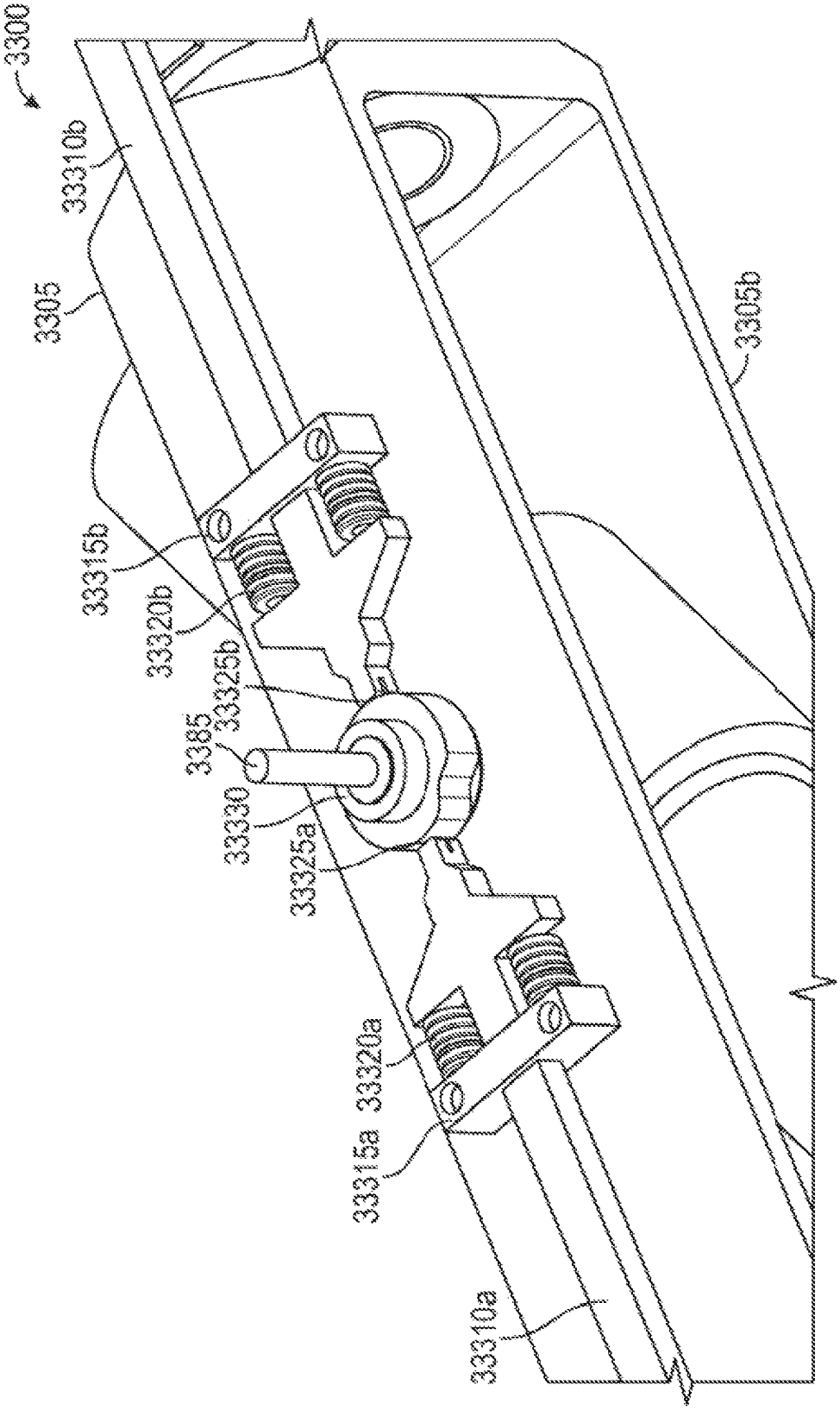
3300
33310b
3305
33315b
33320b
33325b
3385
33330
33325a
33320a
33315a
33310a
3305b

FIG. 33D

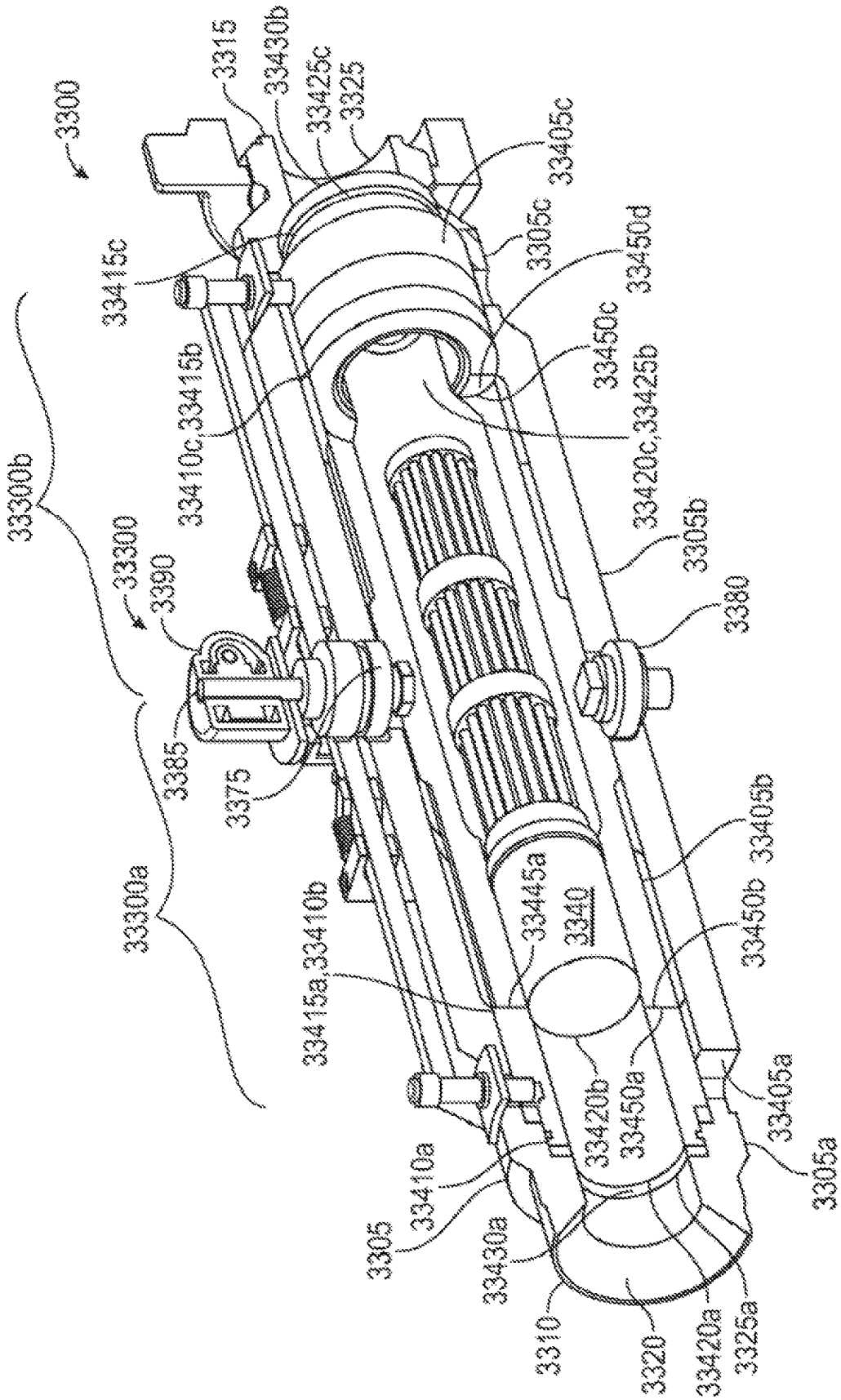
3300
3315
33430b
33425c
3325
33405c
3305c
33450d
33415c
33450c
33415b
33425b
33410c,
33420c,
33300b
33300
3390
3305b
3380
3385
3375
33405b
33445a
3340
33300a
33410b
33450b
33415a,
33420b
33450a
33405a
33410a
3305a
3305
33430a
3310
3320
33420a
3325a

FIG. 33E

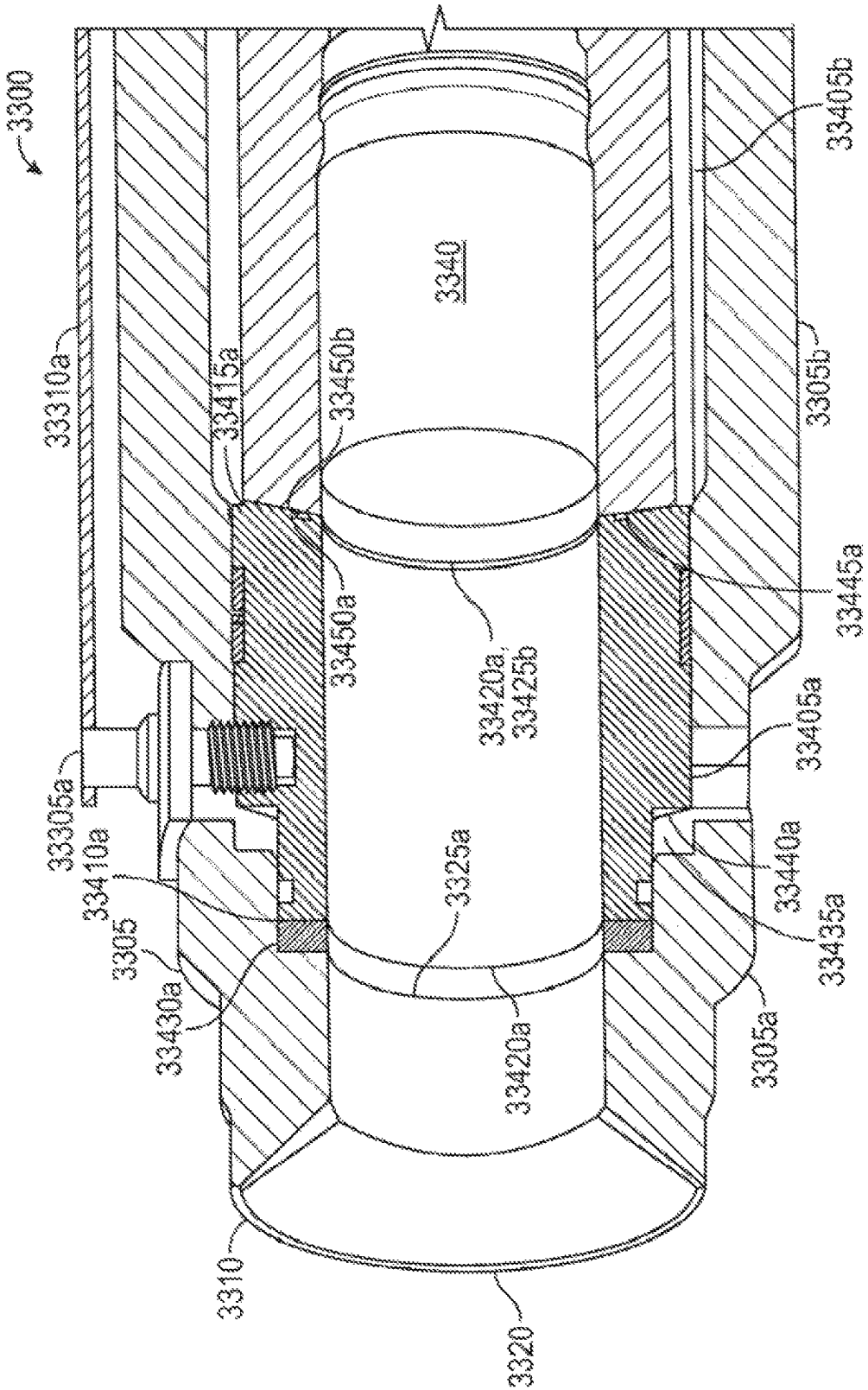
3300
33310a
33415a
33450b
3340
33405b
3305b
33445a
33450a
33420a,
33425b
33405a
33305a
33410a
3305
33430a
3325a
33440a
33435a
3305a
33420a
3310
3320

FIG. 33F

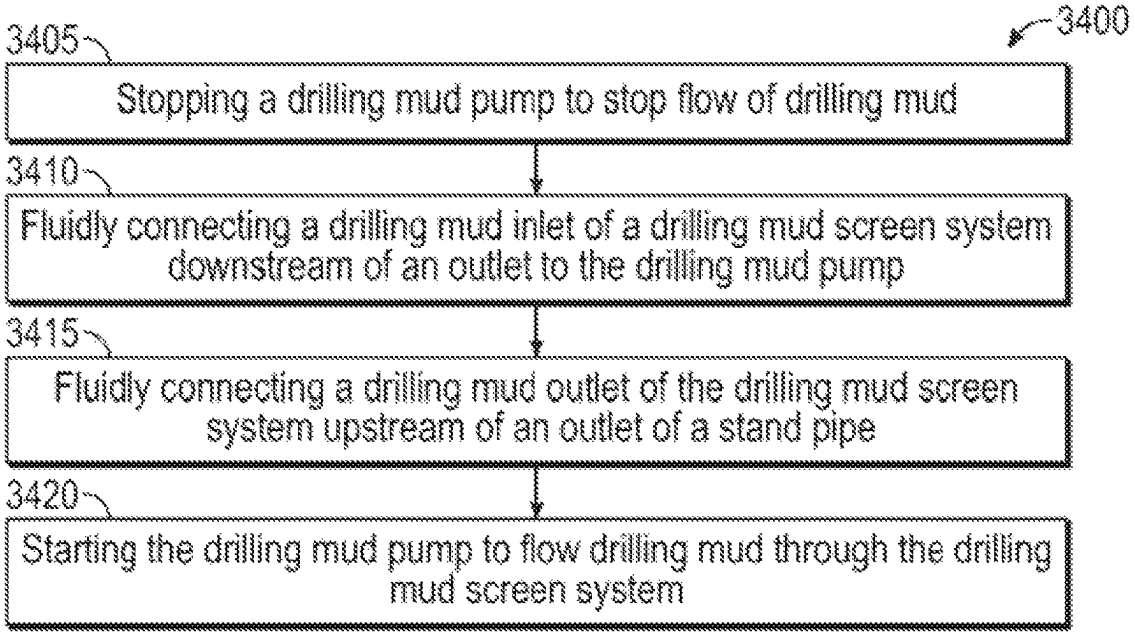

FIG. 34

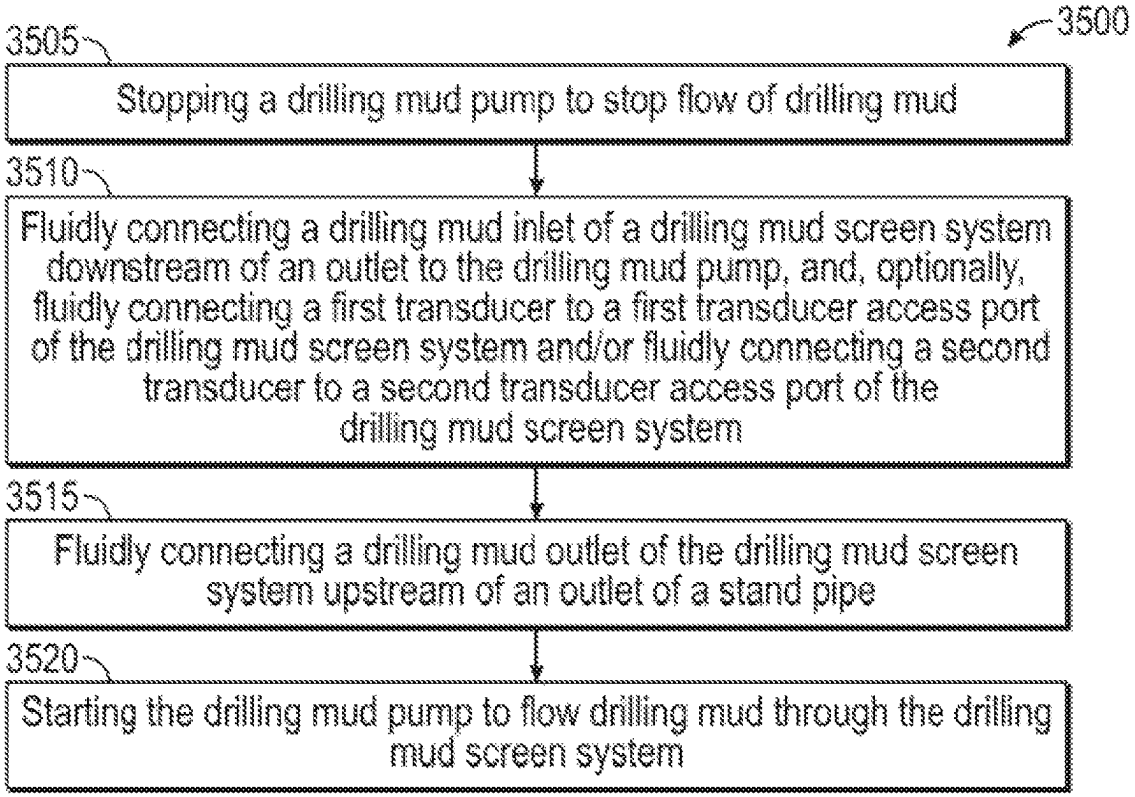

FIG. 35A

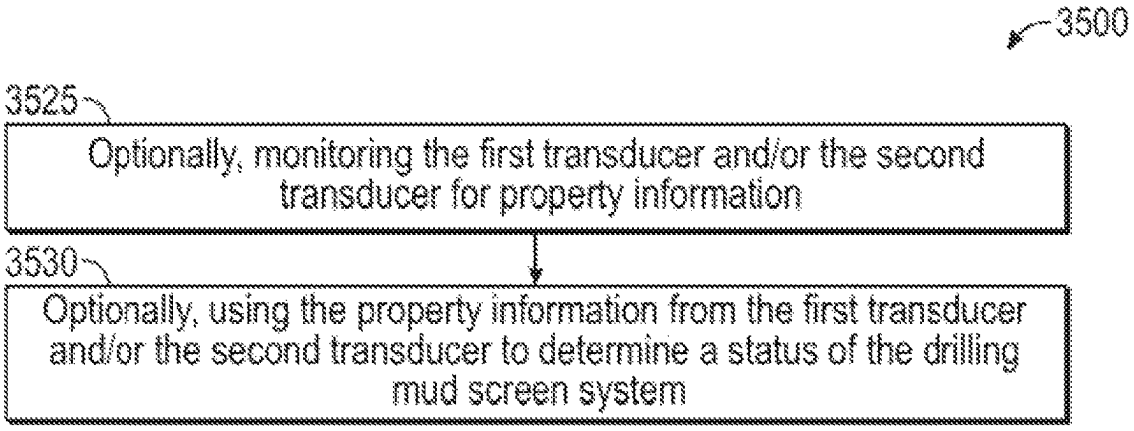

FIG. 35B

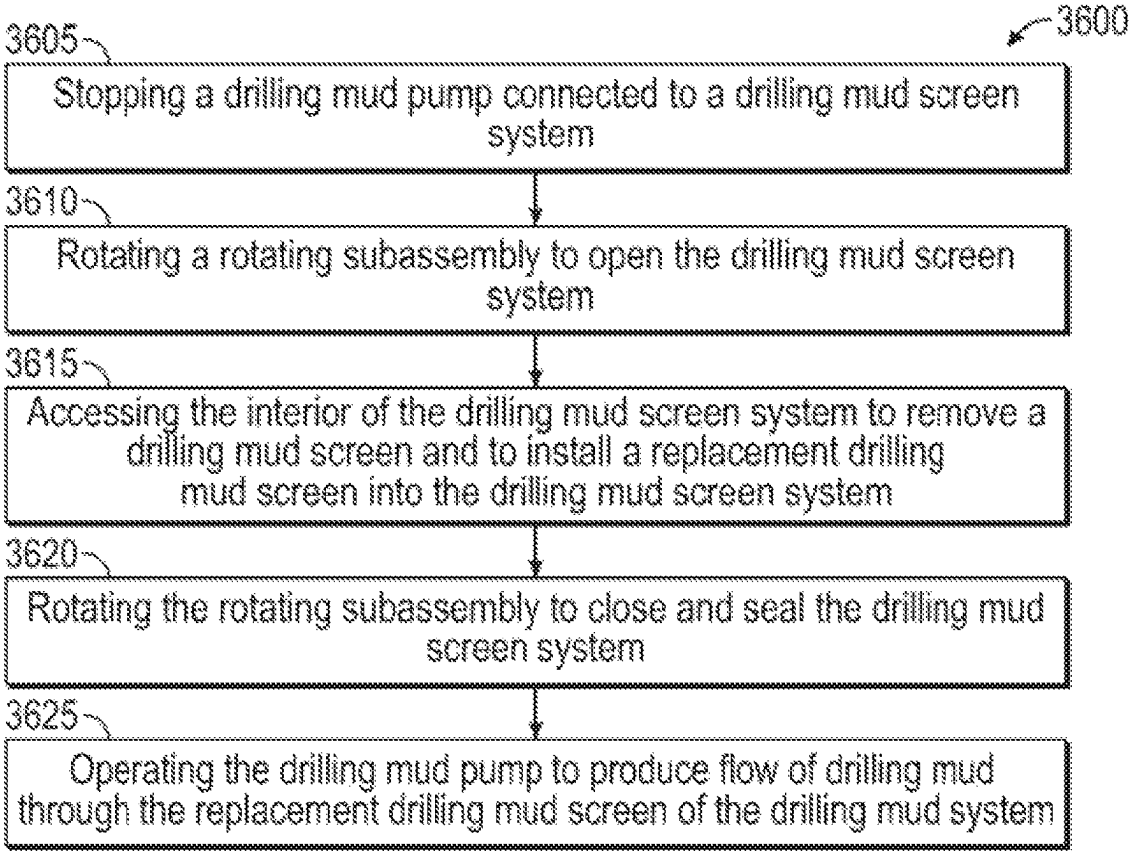

FIG. 36

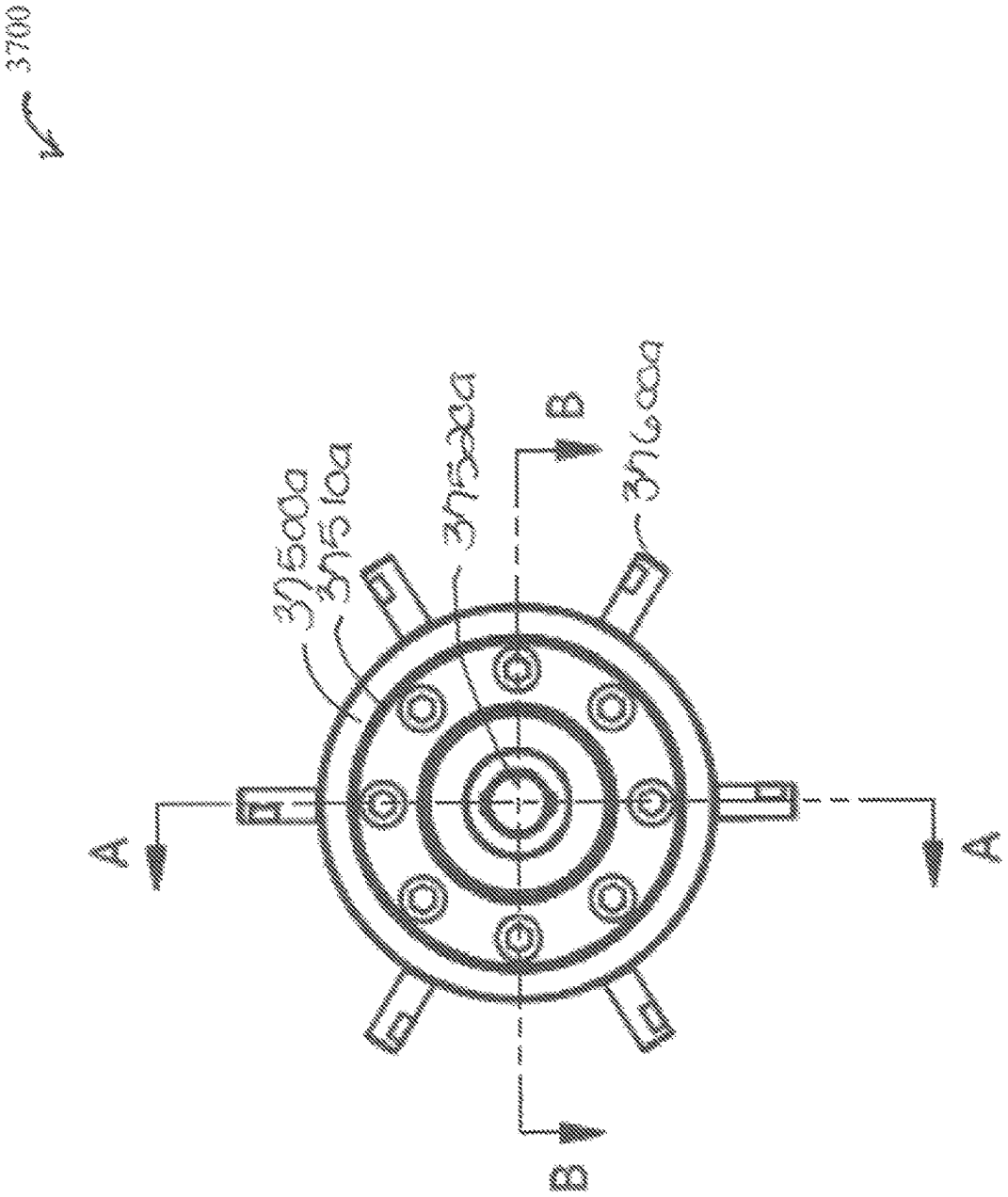

FIG. 37A

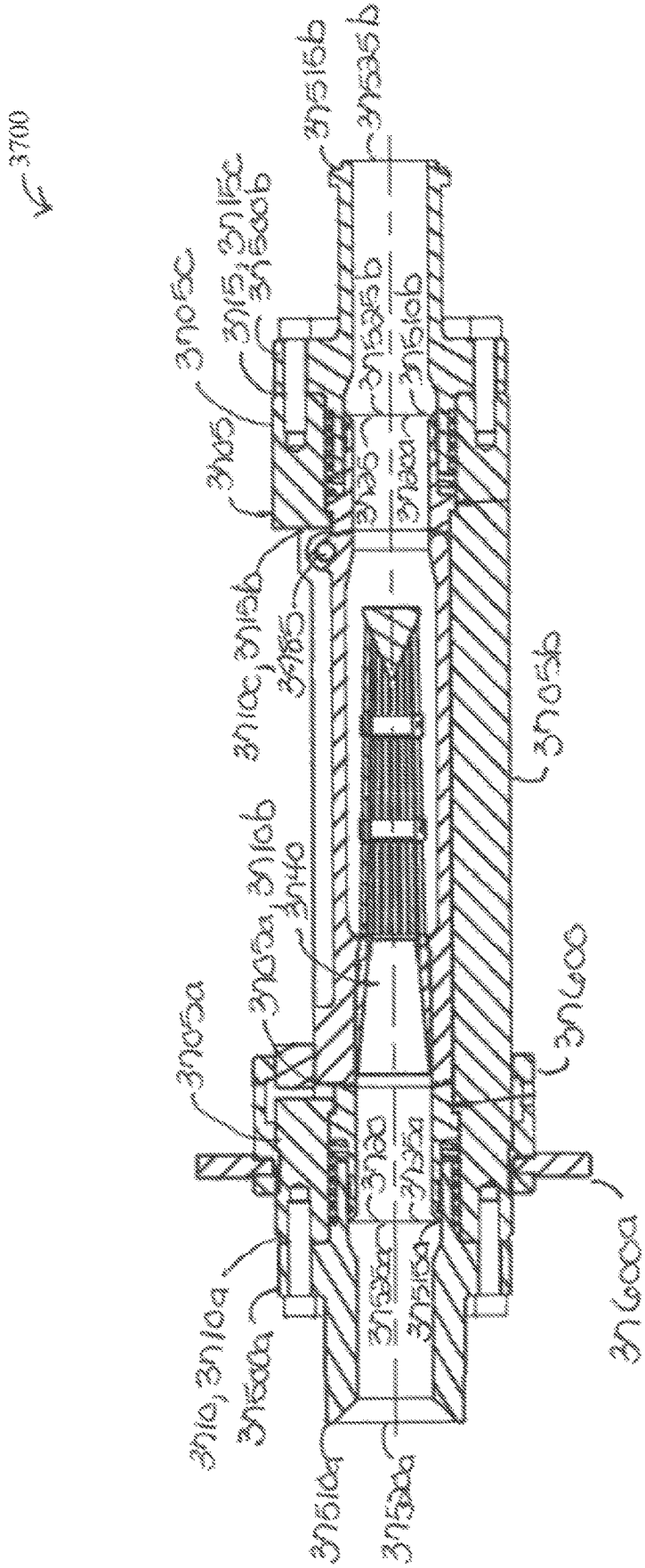
3700
3705c
3705
3705b
3705a
3705a
3740
3600
3600a
3710a
3710b
3710c
3715b
3715c
3715a
3720
3725a
3725b
3730
3735
3735a
3735b
3740
3745
3750a
3750b
3755a
3755b
3760a
3760b
3765
3770a
3770b
3775a
3775b
3780
3785
3790a
3795a
3800a
3800b
3805
3805a
3805b
3810a
3810b
3810c
3815a
3815b
3815c
3815b
3835b

FIG. 37B

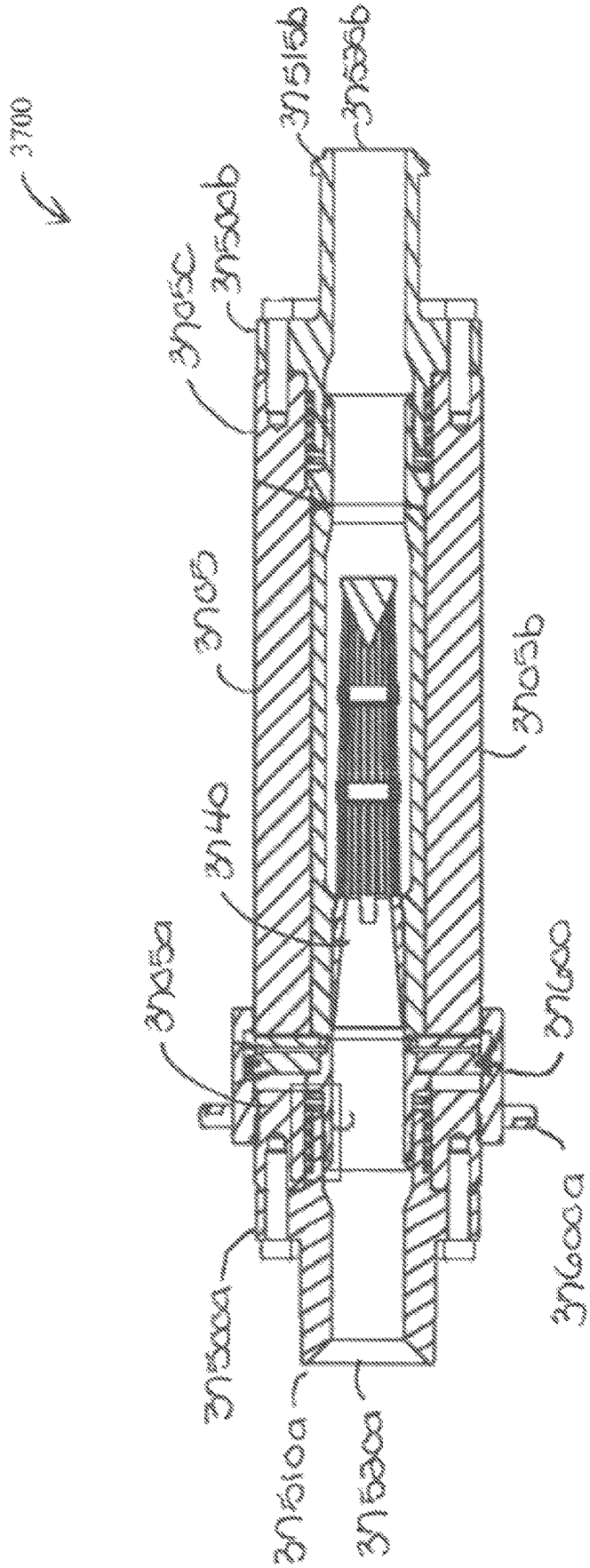
3700
3516b
3536b
3506b
3506c
3505
3505b
3540
3505a
3600
3600a
3500a
3510a
3520a

FIG. 37C

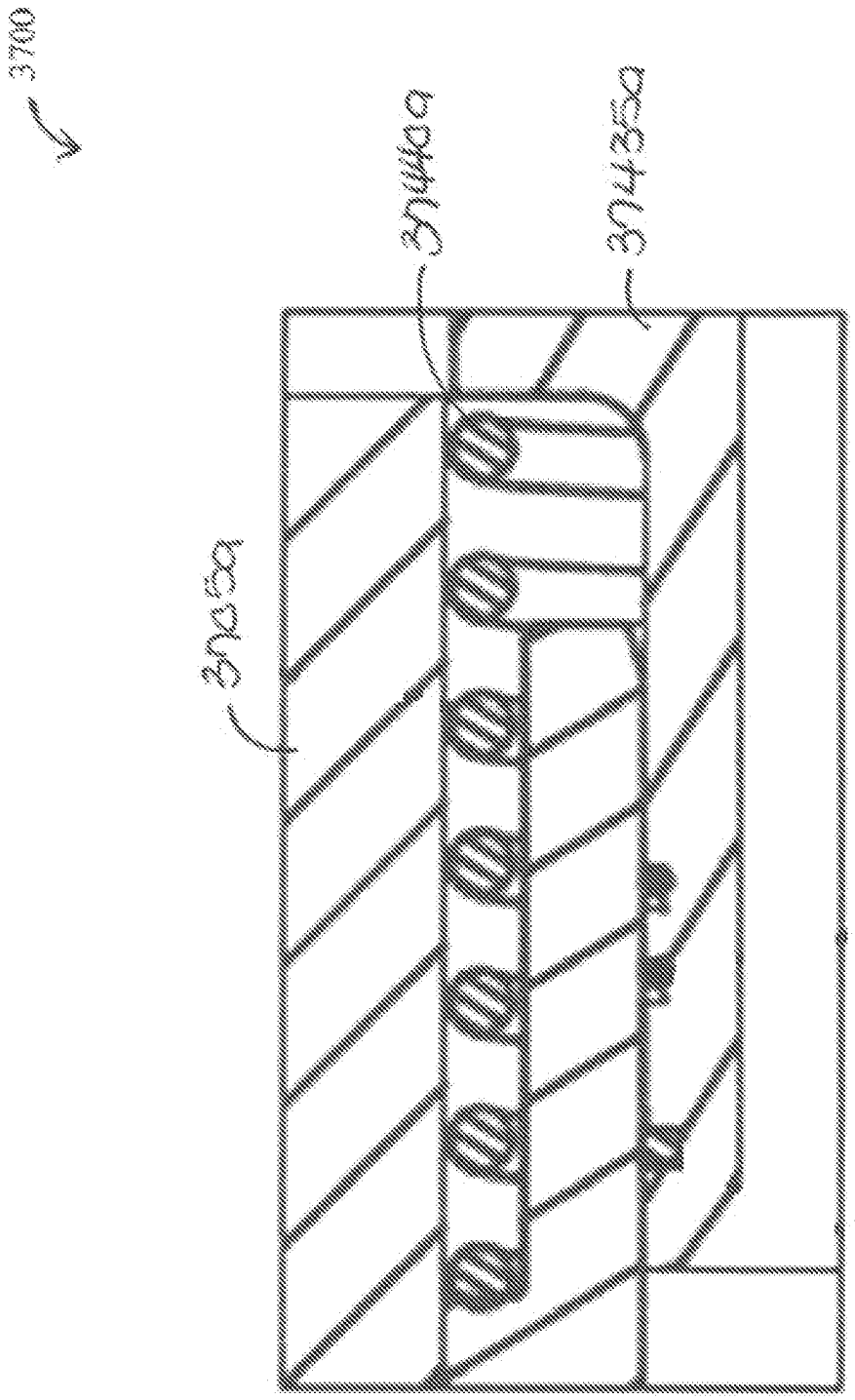

FIG. 37D

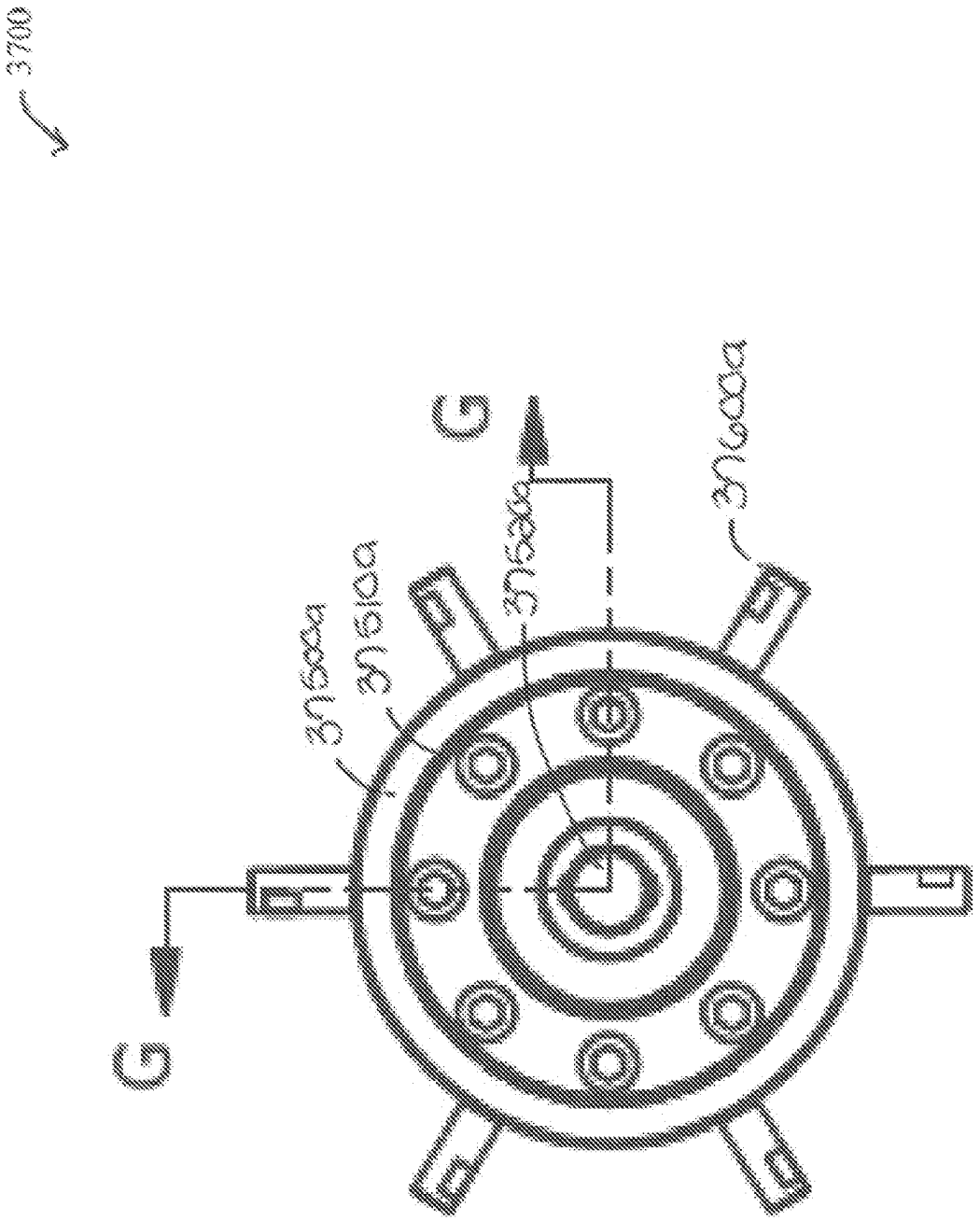

FIG. 37E

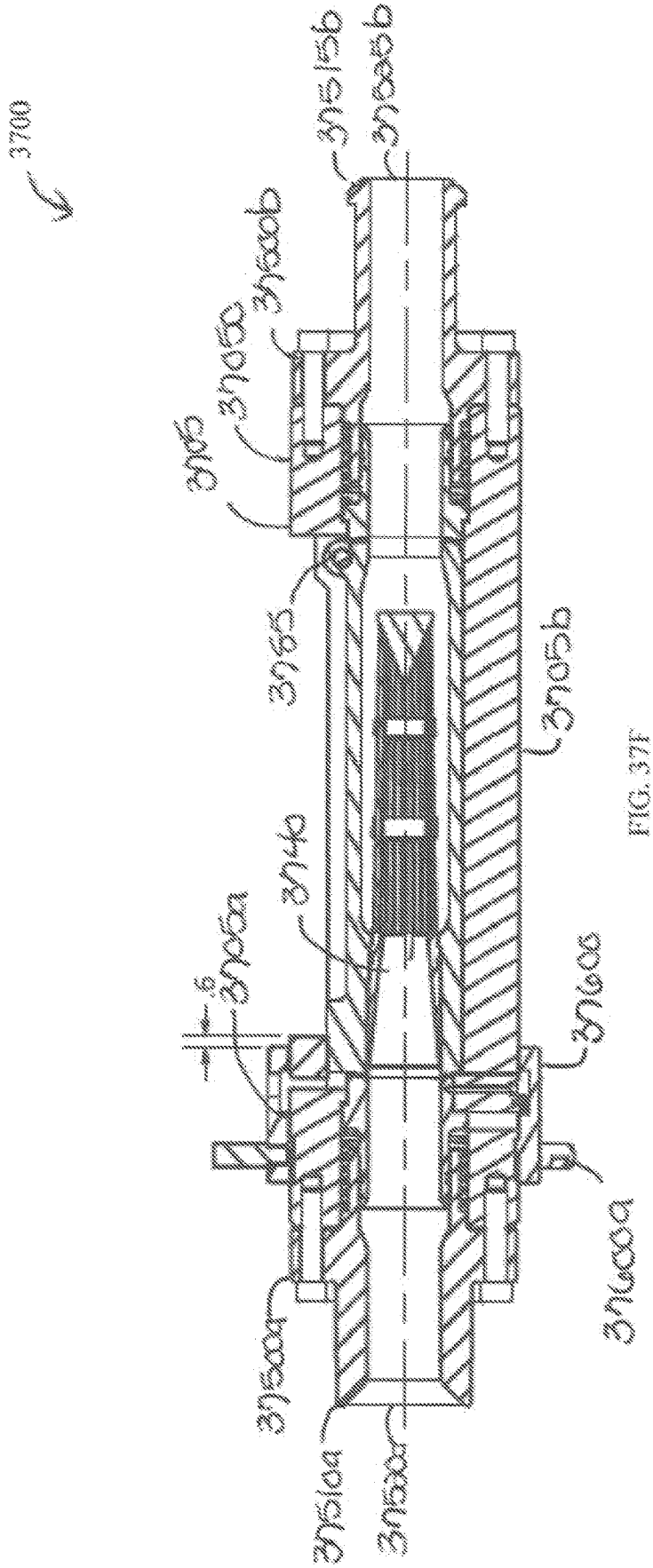
3700
3705
3705a
3705b
3740
3765
3600
3600a
3500a
3510a
3500a

FIG. 37F

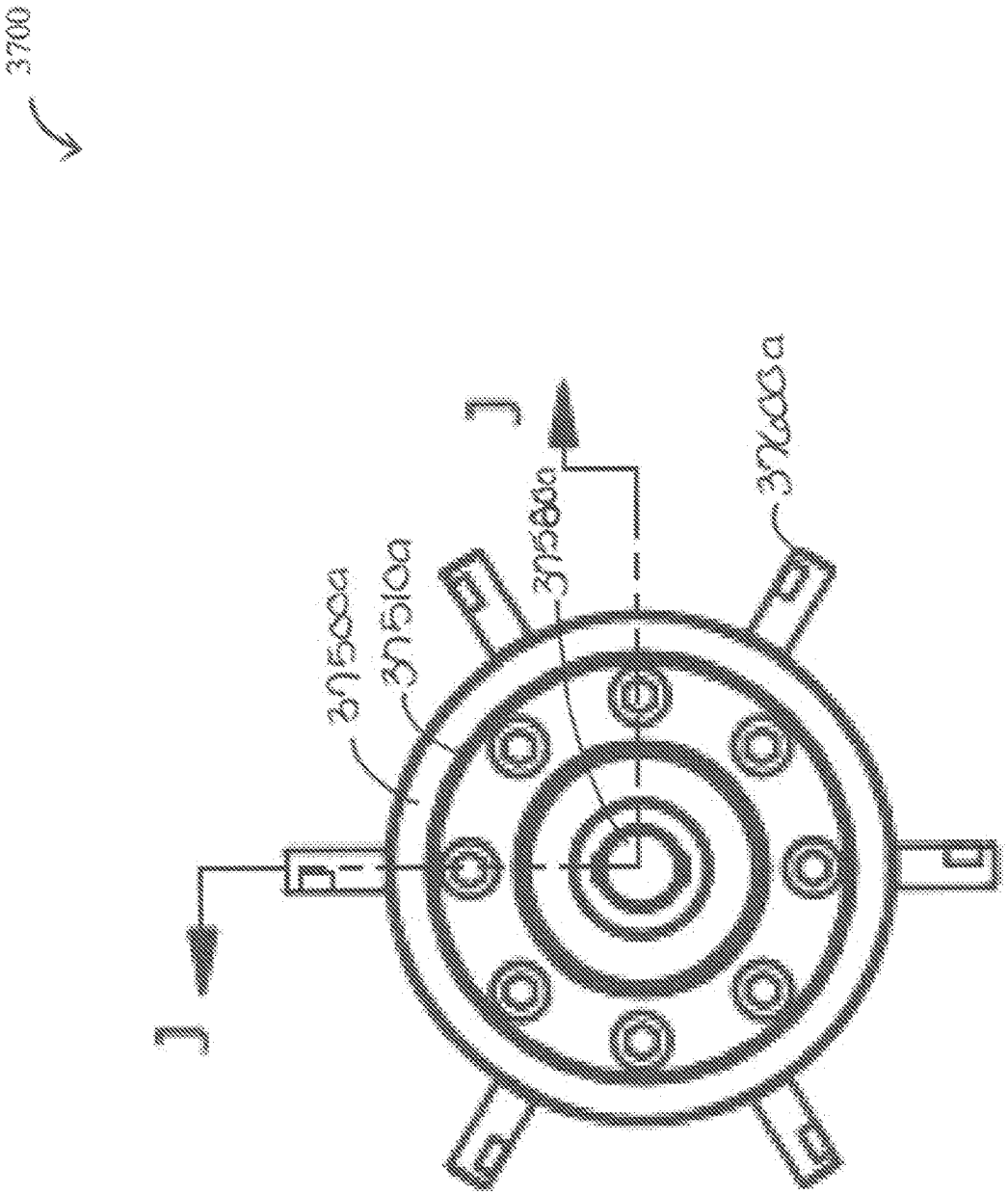

FIG. 37G

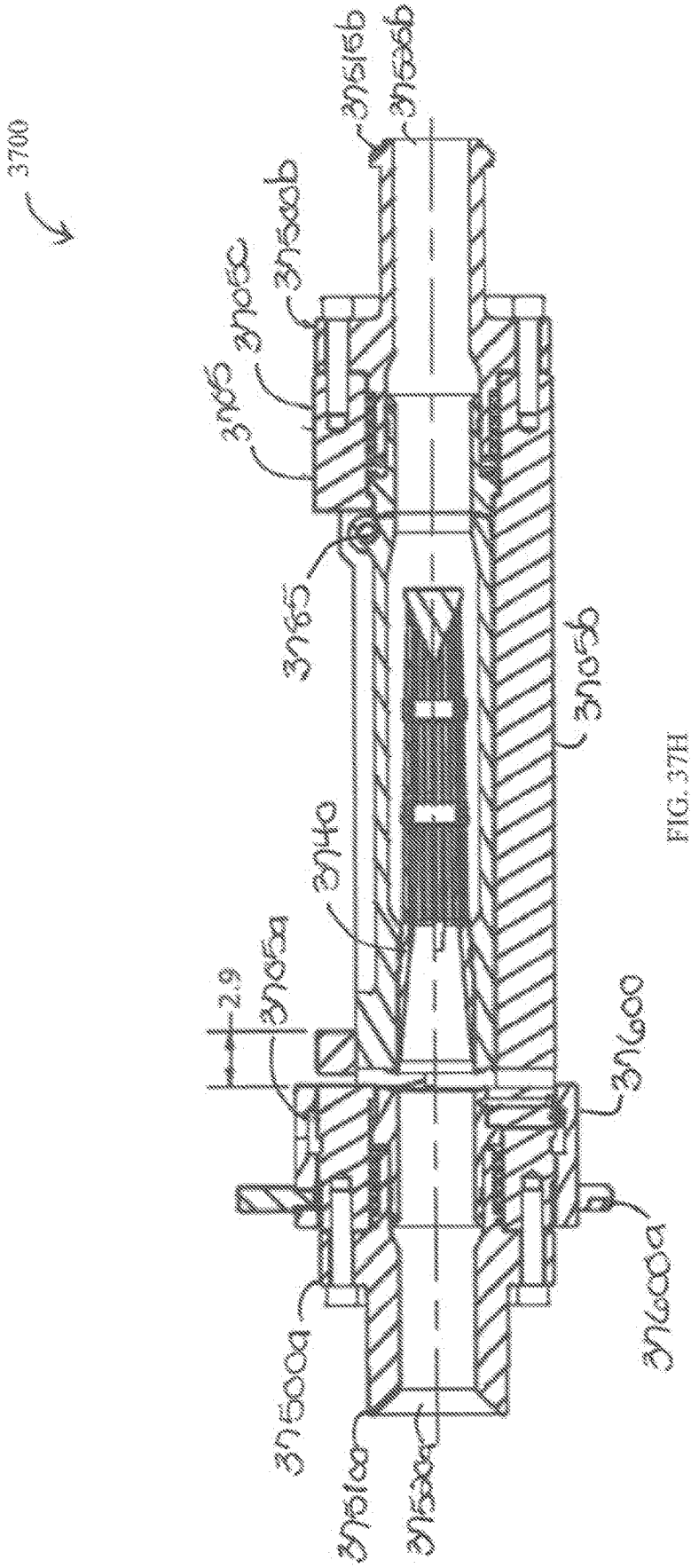
3700
3705
3705a
3705b
3705c
3740
2.9
3600
3600a
3500a
3510a
3520a
3515b
3520b

FIG. 37H

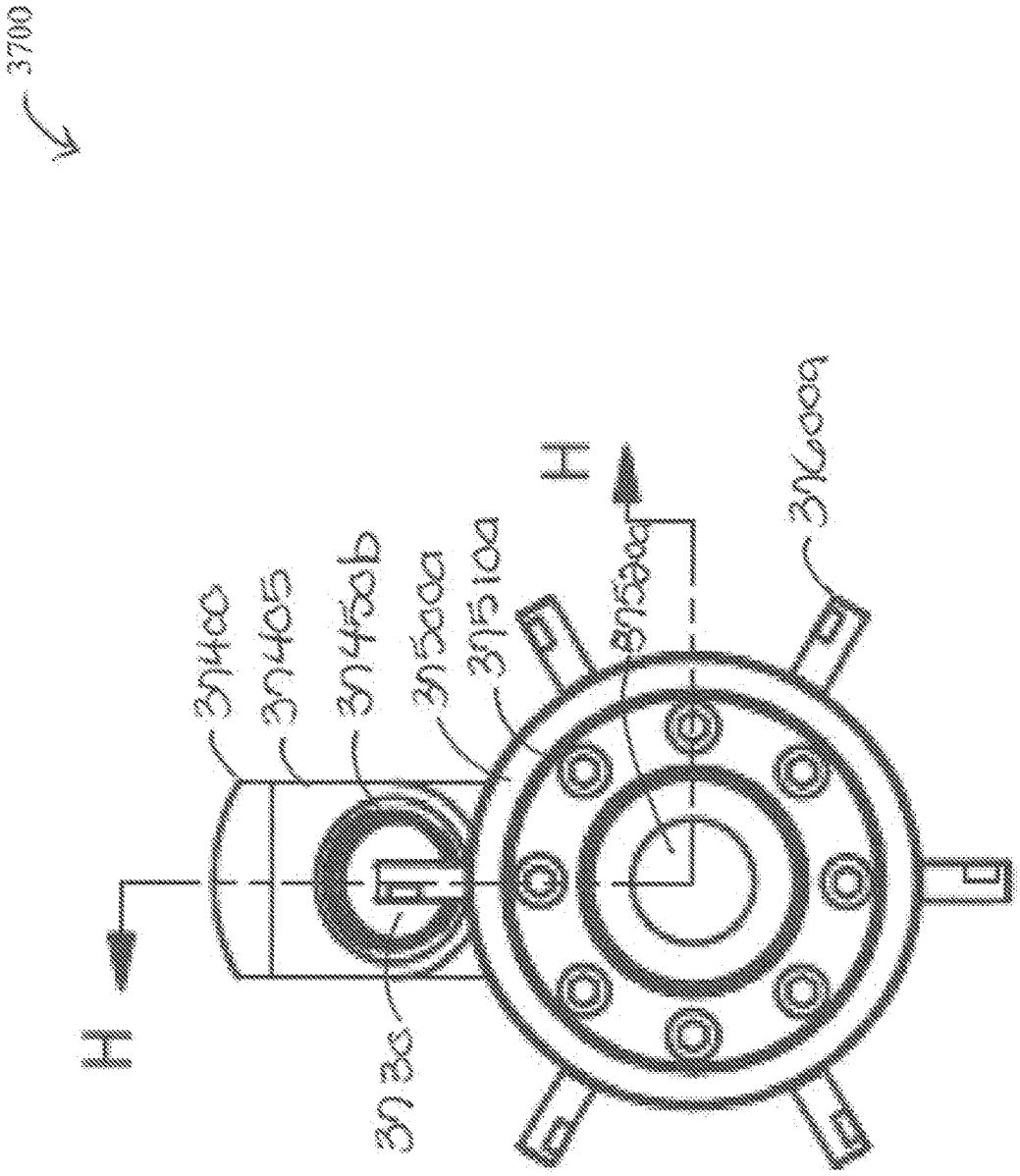

FIG. 371

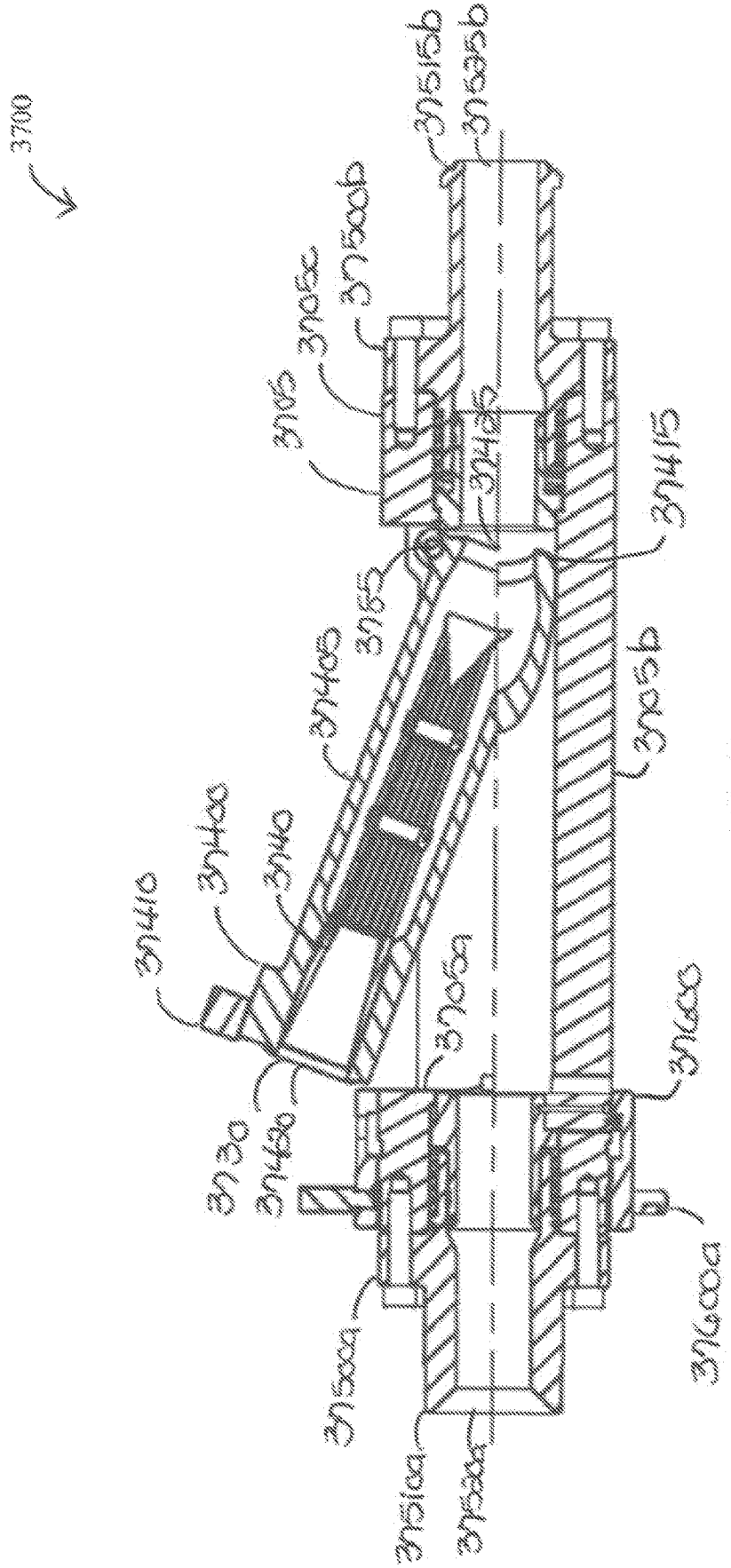
3700
3715b
3735b
3500b
3705c
3705
3425
3415
3755
3405
3705b
3400
3740
3410
3705a
3600
3730
3430
3600a
3500a
3510a
3530a

FIG. 37J

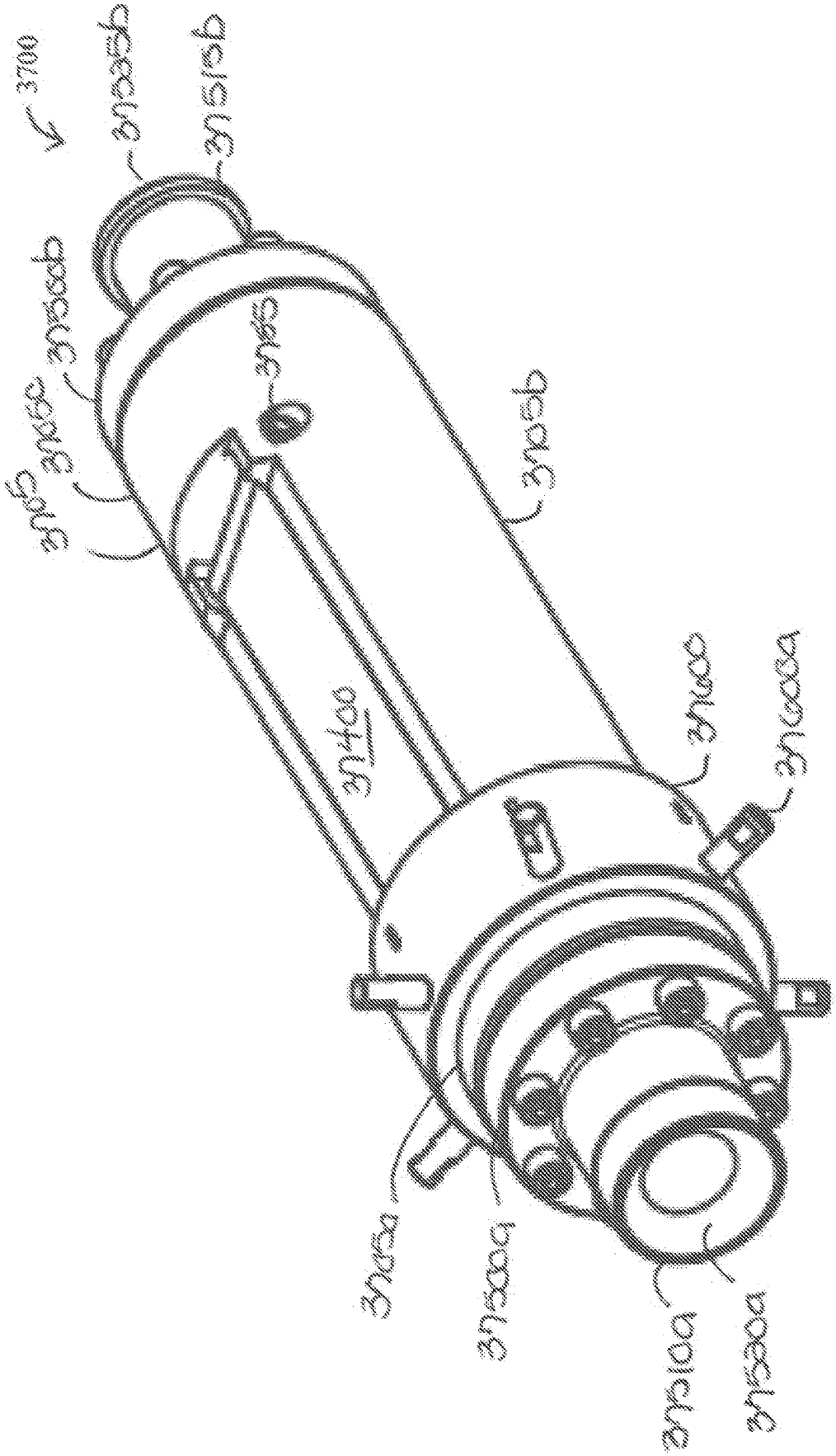
3700
3706b
3706a
3706c
3706d
3706e
3706f
3706g
3706h
3706i
3706j
3706k
3706l
3706m
3706n
3706o
3706p
3706q
3706r
3706s
3706t
3706u
3706v
3706w
3706x
3706y
3706z
3706aa
3706ab
3706ac
3706ad
3706ae
3706af
3706ag
3706ah
3706ai
3706aj
3706ak
3706al
3706am
3706an
3706ao
3706ap
3706aq
3706ar
3706as
3706at
3706au
3706av
3706aw
3706ax
3706ay
3706az
3706ba
3706bb
3706bc
3706bd
3706be
3706bf
3706bg
3706bh
3706bi
3706bj
3706bk
3706bl
3706bm
3706bn
3706bo
3706bp
3706bq
3706br
3706bs
3706bt
3706bu
3706bv
3706bw
3706bx
3706by
3706bz
3706ca
3706cb
3706cc
3706cd
3706ce
3706cf
3706cg
3706ch
3706ci
3706cj
3706ck
3706cl
3706cm
3706cn
3706co
3706cp
3706cq
3706cr
3706cs
3706ct
3706cu
3706cv
3706cw
3706cx
3706cy
3706cz
3706da
3706db
3706dc
3706dd
3706de
3706df
3706dg
3706dh
3706di
3706dj
3706dk
3706dl
3706dm
3706dn
3706do
3706dp
3706dq
3706dr
3706ds
3706dt
3706du
3706dv
3706dw
3706dx
3706dy
3706dz
3706ea
3706eb
3706ec
3706ed
3706ee
3706ef
3706eg
3706eh
3706ei
3706ej
3706ek
3706el
3706em
3706en
3706eo
3706ep
3706eq
3706er
3706es
3706et
3706eu
3706ev
3706ew
3706ex
3706ey
3706ez
3706fa
3706fb
3706fc
3706fd
3706fe
3706ff
3706fg
3706fh
3706fi
3706fj
3706fk
3706fl
3706fm
3706fn
3706fo
3706fp
3706fq
3706fr
3706fs
3706ft
3706fu
3706fv
3706fw
3706fx
3706fy
3706fz
3706ga
3706gb
3706gc
3706gd
3706ge
3706gf
3706gg
3706gh
3706gi
3706gj
3706gk
3706gl
3706gm
3706gn
3706go
3706gp
3706gq
3706gr
3706gs
3706gt
3706gu
3706gv
3706gw
3706gx
3706gy
3706gz
3706ha
3706hb
3706hc
3706hd
3706he
3706hf
3706hg
3706hh
3706hi
3706hj
3706hk
3706hl
3706hm
3706hn
3706ho
3706hp
3706hq
3706hr
3706hs
3706ht
3706hu
3706hv
3706hw
3706hx
3706hy
3706hz
3706ia
3706ib
3706ic
3706id
3706ie
3706if
3706ig
3706ih
3706ii
3706ij
3706ik
3706il
3706im
3706in
3706io
3706ip
3706iq
3706ir
3706is
3706it
3706iu
3706iv
3706iw
3706ix
3706iy
3706iz
3706ja
3706jb
3706jc
3706jd
3706je
3706jf
3706jg
3706jh
3706ji
3706jj
3706jk
3706jl
3706jm
3706jn
3706jo
3706jp
3706jq
3706jr
3706js
3706jt
3706ju
3706jv
3706jw
3706jx
3706jy
3706jz
3706ka
3706kb
3706kc
3706kd
3706ke
3706kf
3706kg
3706kh
3706ki
3706kj
3706kk
3706kl
3706km
3706kn
3706ko
3706kp
3706kq
3706kr
3706ks
3706kt
3706ku
3706kv
3706kw
3706kx
3706ky
3706kz
3706la
3706lb
3706lc
3706ld
3706le
3706lf
3706lg
3706lh
3706li
3706lj
3706lk
3706ll
3706lm
3706ln
3706lo
3706lp
3706lq
3706lr
3706ls
3706lt
3706lu
3706lv
3706lw
3706lx
3706ly
3706lz
3706ma
3706mb
3706mc
3706md
3706me
3706mf
3706mg
3706mh
3706mi
3706mj
3706mk
3706ml
3706mm
3706mn
3706mo
3706mp
3706mq
3706mr
3706ms
3706mt
3706mu
3706mv
3706mw
3706mx
3706my
3706mz
3706na
3706nb
3706nc
3706nd
3706ne
3706nf
3706ng
3706nh
3706ni
3706nj
3706nk
3706nl
3706nm
3706nn
3706no
3706np
3706nq
3706nr
3706ns
3706nt
3706nu
3706nv
3706nw
3706nx
3706ny
3706nz
3706oa
3706ob
3706oc
3706od
3706oe
3706of
3706og
3706oh
3706oi
3706oj
3706ok
3706ol
3706om
3706on
3706oo
3706op
3706oq
3706or
3706os
3706ot
3706ou
3706ov
3706ow
3706ox
3706oy
3706oz
3706pa
3706pb
3706pc
3706pd
3706pe
3706pf
3706pg
3706ph
3706pi
3706pj
3706pk
3706pl
3706pm
3706pn
3706po
3706pp
3706pq
3706pr
3706ps
3706pt
3706pu
3706pv
3706pw
3706px
3706py
3706pz
3706qa
3706qb
3706qc
3706qd
3706qe
3706qf
3706qg
3706qh
3706qi
3706qj
3706qk
3706ql
3706qm
3706qn
3706qo
3706qp
3706qq
3706qr
3706qs
3706qt
3706qu
3706qv
3706qw
3706qx
3706qy
3706qz
3706ra
3706rb
3706rc
3706rd
3706re
3706rf
3706rg
3706rh
3706ri
3706rj
3706rk
3706rl
3706rm
3706rn
3706ro
3706rp
3706rq
3706rr
3706rs
3706rt
3706ru
3706rv
3706rw
3706rx
3706ry
3706rz
3706sa
3706sb
3706sc
3706sd
3706se
3706sf
3706sg
3706sh
3706si
3706sj
3706sk
3706sl
3706sm
3706sn
3706so
3706sp
3706sq
3706sr
3706ss
3706st
3706su
3706sv
3706sw
3706sx
3706sy
3706sz
3706ta
3706tb
3706tc
3706td
3706te
3706tf
3706tg
3706th
3706ti
3706tj
3706tk
3706tl
3706tm
3706tn
3706to
3706tp
3706tq
3706tr
3706ts
3706tt
3706tu
3706tv
3706tw
3706tx
3706ty
3706tz
3706ua
3706ub
3706uc
3706ud
3706ue
3706uf
3706ug
3706uh
3706ui
3706uj
3706uk
3706ul
3706um
3706un
3706uo
3706up
3706uq
3706ur
3706us
3706ut
3706uu
3706uv
3706uw
3706ux
3706uy
3706uz
3706va
3706vb
3706vc
3706vd
3706ve
3706vf
3706vg
3706vh
3706vi
3706vj
3706vk
3706vl
3706vm
3706vn
3706vo
3706vp
3706vq
3706vr
3706vs
3706vt
3706vu
3706vv
3706vw
3706vx
3706vy
3706vz
3706wa
3706wb
3706wc
3706wd
3706we
3706wf
3706wg
3706wh
3706wi
3706wj
3706wk
3706wl
3706wm
3706wn
3706wo
3706wp
3706wq
3706wr
3706ws
3706wt
3706wu
3706wv
3706ww
3706wx
3706wy
3706wz
3706xa
3706xb
3706xc
3706xd
3706xe
3706xf
3706xg
3706xh
3706xi
3706xj
3706xk
3706xl
3706xm
3706xn
3706xo
3706xp
3706xq
3706xr
3706xs
3706xt
3706xu
3706xv
3706xw
3706xx
3706xy
3706xz
3706ya
3706yb
3706yc
3706yd
3706ye
3706yf
3706yg
3706yh
3706yi
3706yj
3706yk
3706yl
3706ym
3706yn
3706yo
3706yp
3706yq
3706yr
3706ys
3706yt
3706yu
3706yv
3706yw
3706yx
3706yy
3706yz
3706za
3706zb
3706zc
3706zd
3706ze
3706zf
3706zg
3706zh
3706zi
3706zj
3706zk
3706zl
3706zm
3706zn
3706zo
3706zp
3706zq
3706zr
3706zs
3706zt
3706zu
3706zv
3706zw
3706zx
3706zy
3706zz
3706aaa
3706aab
3706aac
3706aad
3706aae
3706aaf
3706aag
3706aah
3706aai
3706aaj
3706aak
3706aal
3706aam
3706aan
3706aao
3706aap
3706aaq
3706aar
3706aas
3706aat
3706aau
3706aav
3706aaw
3706aax
3706aay
3706aaz
3706aba
3706abb
3706abc
3706abd
3706abe
3706abf
3706abg
3706abh
3706abi
3706abj
3706abk
3706abl
3706abm
3706abn
3706abo
3706abp
3706abq
3706abr
3706abs
3706abt
3706abu
3706abv
3706abw
3706abx
3706aby
3706abz
3706aca
3706acb
3706acc
3706acd
3706ace
3706acf
3706acg
3706ach
3706aci
3706acj
3706ack
3706acl
3706acm
3706acn
3706aco
3706acp
3706acq
3706acr
3706acs
3706act
3706acu
3706acv
3706acw
3706acx
3706acy
3706acz
3706ada
3706adb
3706adc
3706add
3706ade
3706adf
3706adg
3706adh
3706adi
3706adj
3706adk
3706adl
3706adm
3706adn
3706ado
3706adp
3706adq
3706adr
3706ads
3706adt
3706adu
3706adv
3706adw
3706adx
3706ady
3706adz
3706aea
3706aeb
3706aec
3706aed
3706aee
3706aef
3706aeg
3706aeh
3706aei
3706aej
3706aek
3706ael
3706aem
3706aen
3706aeo
3706aep
3706aeq
3706aer
3706aes
3706aet
3706aeu
3706aev
3706aew
3706aex
3706aey
3706aez
3706afa
3706afb
3706afc
3706afd
3706afe
3706aff
3706afg
3706afh
3706afi
3706afj
3706afk
3706afl
3706afm
3706afn
3706afo
3706afp
3706afq
3706afr
3706afs
3706aft
3706afu
3706afv
3706afw
3706afx
3706afy
3706afz
3706aga
3706agb
3706agc
3706agd
3706age
3706agf
3706agg
3706agh
3706agi
3706agj
3706agk
3706agl
3706agm
3706agn
3706ago
3706agp
3706agq
3706agr
3706ags
3706agt
3706agu
3706agv
3706agw
3706agx
3706agy
3706agz
3706aha
3706ahb
3706ahc
3706ahd
3706ahe
3706ahf
3706ahg
3706ahh
3706ahi
3706ahj
3706ahk
3706ahl
3706ahm
3706ahn
3706aho
3706ahp
3706ahq
3706ahr
3706ahs
3706aht
3706ahu
3706ahv
3706ahw
3706ahx
3706ahy
3706ahz
3706aia
3706aib
3706aic
3706aid
3706aie
3706aif
3706aig
3706aih
3706aii
3706aij
3706aik
3706ail
3706aim
3706ain
3706aio
3706aip
3706aiq
3706air
3706ais
3706ait
3706aiu
3706aiv
3706aiw
3706aix
3706aiy
3706aiz
3706aja
3706ajb
3706ajc
3706ajd
3706aje
3706ajf
3706ajg
3706ajh
3706aji
3706ajj
3706ajk
3706ajl
3706ajm
3706ajn
3706ajo
3706ajp
3706ajq
3706ajr
3706ajs
3706ajt
3706aju
3706ajv
3706ajw
3706ajx
3706ajy
3706ajz
3706aka
3706akb
3706akc
3706akd
3706ake
3706akf
3706akg
3706akh
3706aki
3706akj
3706akk
3706akl
3706akm
3706akn
3706ako
3706akp
3706akq
3706akr
3706aks
3706akt
3706aku
3706akv
3706akw
3706akx
3706aky
3706akz
3706ala
3706alb
3706alc
3706ald
3706ale
3706alf
3706alg
3706alh
3706ali
3706alj
3706alk
3706all
3706alm
3706aln
3706alo
3706alp
3706alq
3706alr
3706als
3706alt
3706alu
3706alv
3706alw
3706alx
3706aly
3706alz
3706ama
3706amb
3706amc
3706amd
3706ame
3706amf
3706amg
3706amh
3706ami
3706amj
3706amk
3706aml
3706amm
3706amn
3706amo
3706amp
3706amq
3706amr
3706ams
3706amt
3706amu
3706amv
3706amw
3706amx
3706amy
3706amz
3706ana
3706anb
3706anc
3706and
3706ane
3706anf
3706ang
3706anh
3706ani
3706anj
3706ank
3706anl
3706anm
3706ann
3706ano
3706anp
3706anq
3706anr
3706ans
3706ant
3706anu
3706anv
3706anw
3706anx
3706any
3706anz
3706aoa
3706aob
3706aoc
3706aod
3706aoe
3706aof
3706aog
3706aoh
3706aoi
3706aoj
3706aok
3706aol
3706aom
3706aon
3706aoo
3706aop
3706aoq
3706aor
3706aos
3706aot
3706aou
3706aov
3706aow
3706aox
3706aoy
3706aoz
3706apa
3706apb
3706apc
3706apd
3706ape
3706apf
3706apg
3706aph
3706api
3706apj
3706apk
3706apl
3706apm
3706apn
3706apo
3706app
3706apq
3706apr
3706aps
3706apt
3706apu
3706apv
3706apw
3706apx
3706apy
3706apz
3706aqa
3706aqb
3706aqc
3706aqd
3706aqe
3706aqf
3706aqg
3706aqh
3706aqi
3706aqj
3706aqk
3706aql
3706aqm
3706aqn
3706aqo
3706aqp
3706aqq
3706aqr
3706aqs
3706aqt
3706aqu
3706aqv
3706aqw
3706aqx
3706aqy
3706aqz
3706ara
3706arb
3706arc
3706ard
3706are
3706arf
3706arg
3706arh
3706ari
3706arj
3706ark
3706arl
3706arm
3706arn
3706aro
3706arp
3706arq
3706arr
3706ars
3706art
3706aru
3706arv
3706arw
3706arx
3706ary
3706arz
3706asa
3706asb
3706asc
3706asd
3706ase
3706asf
3706asg
3706ash
3706asi
3706asj
3706ask
3706asl
3706asm
3706asn
3706aso
3706asp
3706asq
3706asr
3706ass
3706ast
3706asu
3706asv
3706asw
3706asx
3706asy
3706asz
3706ata
3706atb
3706atc
3706atd
3706ate
3706atf
3706atg
3706ath
3706ati
3706atj
3706atk
3706atl
3706atm
3706atn
3706ato
3706atp
3706atq
3706atr
3706ats
3706att
3706atu
3706atv
3706atw
3706atx
3706aty
3706atz
3706aua
3706aub
3706auc
3706aud
3706aue
3706auf
3706aug
3706auh
3706aui
3706auj
3706auk
3706aul
3706aum
3706aun
3706auo
3706aup
3706auq
3706aur
3706aus
3706aut
3706auu
3706auv
3706auw
3706aux
3706auy
3706auz
3706ava
3706avb
3706avc
3706avd
3706ave
3706avf
3706avg
3706avh
3706avi
3706avj
3706avk
3706avl
3706avm
3706avn
3706avo
3706avp
3706avq
3706avr
3706avs
3706avt
3706avu
3706avv
3706avw
3706avx
3706avy
3706avz
3706awa
3706awb
3706awc
3706awd
3706awe
3706awf
3706awg
3706awh
3706awi
3706awj
3706awk
3706awl
3706awm
3706awn
3706awo
3706awp
3706awq
3706awr
3706aws
3706awt
3706awu
3706awv
3706aww
3706awx
3706awy
3706awz
3706axa
3706axb
3706axc
3706axd
3706axe
3706axf
3706axg
3706axh
3706axi
3706axj
3706axk
3706axl
3706axm
3706axn
3706axo
3706axp
3706axq
3706axr
3706axs
3706axt
3706axu
3706axv
3706axw
3706axx
3706axy
3706axz
3706aya
3706ayb
3706ayc
3706ayd
3706aye
3706ayf
3706ayg
3706ayh
3706ayi
3706ayj
3706ayk
3706ayl
3706aym
3706ayn
3706ayo
3706ayp
3706ayq
3706ayr
3706ays
3706ayt
3706ayu
3706ayv
3706ayw
3706ayx
3706ayy
3706ayz
3706aza
3706azb
3706azc
3706azd
3706aze
3706azf
3706azg
3706azh
3706azi
3706azj
3706azk
3706azl
3706azm
3706azn
3706azo
3706azp
3706azq
3706azr
3706azs
3706azt
3706azu
3706azv
3706azw
3706azx
3706azy
3706azz
3706baa
3706bab
3706bac
3706bad
3706bae
3706baf
3706bag
3706bah
3706bai
3706baj
3706bak
3706bal
3706bam
3706ban
3706bao
3706bap
3706baq
3706bar
3706bas
3706bat
3706bau
3706bav
3706baw
3706bax
3706bay
3706baz
3706bba
3706bbb
3706bbc
3706bbd
3706bbe
3706bbf
3706bbg
3706bbh
3706bbi
3706bbj
3706bbk
3706bbl
3706bbm
3706bbn
3706bbo
3706bbp
3706bbq
3706bbr
3706bbs
3706bbt
3706bbu
3706bbv
3706bbw
3706bbx
3706bby
3706bbz
3706bca
3706bcb
3706bcc
3706bcd
3706bce
3706bcf
3706bcg
3706bch
3706bci
3706bcj
3706bck
3706bcl
3706bcm
3706bcn
3706bco
3706bcp
3706bcq
3706bcr
3706bcs
3706bct
3706bcu
3706bcv
3706bcw
3706bcx
3706bcy
3706bcz
3706bda
3706bdb
3706bdc
3706bdd
3706bde
3706bdf
3706bdg
3706bdh
3706bdi
3706bdj
3706bdk
3706bdl
3706bdm
3706bdn
3706bdo
3706bdp
3706bdq
3706bdr
3706bds
3706bdt
3706bdu
3706bdv
3706bdw
3706bdx
3706bdy
3706bdz
3706bea
3706beb
3706bec
3706bed
3706bee
3706bef
3706beg
3706beh
3706bei
3706bej
3706bek
3706bel
3706bem
3706ben
3706beo
3706bep
3706beq
3706ber
3706bes
3706bet
3706beu
3706bev
3706bew
3706bex
3706bey
3706bez
3706bfa
3706bfb
3706bfc
3706bfd
3706bfe
3706bff
3706bfg
3706bfh
3706bfi
3706bfj
3706bfk
3706bfl
3706bfm
3706bfn
3706bfo
3706bfp
3706bfq
3706bfr
3706bfs
3706bft
3706bfu
3706bfv
3706bfw
3706bfx
3706bfy
3706bfz
3706bga
3706bgb
3706bgc
3706bgd
3706bge
3706bgf
3706bgg
3706bgh
3706bgi
3706bgj
3706bgk
3706bgl
3706bgm
3706bgn
3706bgo
3706bgp
3706bgq
3706bgr
3706bgs
3706bgt
3706bgu
3706bgv
3706bgw
3706bgx
3706bgy
3706bgz
3706bha
3706bhb
3706bhc
3706bhd
3706bhe
3706bhf
3706bhg
3706bhh
3706bhi
3706bhj
3706bhk
3706bhl
3706bhm
3706bhn
3706bho
3706bhp
3706bhq
3706bhr
3706bhs
3706bht
3706bhu
3706bhv
3706bhw
3706bhx
3706bhy
3706bhz
3706bia
3706bib
3706bic
3706bid
3706bie
3706bif
3706big
3706bih
3706bii
3706bij
3706bik
3706bil
3706bim
3706bin
3706bio
3706bip
3706biq
3706bir
3706bis
3706bit
3706biu
3706biv
3706biw
3706bix
3706biy
3706biz
3706bja
3706bjb
3706bjc
3706bjd
3706bje
3706bjf
3706bjg
3706bjh
3706bji
3706bjj
3706bjk
3706bjl
3706bjm
3706bjn
3706bjo
3706bjp
3706bjq
3706bjr
3706bjs
3706bjt
3706bju
3706bjv
3706bjw
3706bjx
3706bjy
3706bjz
3706bka
3706bkb
3706bkc
3706bkd
3706bke
3706bkf
3706bkg
3706bkh
3706bki
3706bkj
3706bkk
3706bkl
3706bkm
3706bkn
3706bko
3706bkp
3706bkq
3706bkr
3706bks
3706bkt
3706bku
3706bkv
3706bkw
3706bkx
3706bky
3706bkz
3706bla
3706blb
3706blc
3706bld
3706ble
3706blf
3706blg
3706blh
3706bli
3706blj
3706blk
3706bll
3706blm
3706bln
3706blo
3706blp
3706blq
3706blr
3706bls
3706blt
3706blu
3706blv
3706blw
3706blx
3706bly
3706blz
3706bma
3706bmb
3706bmc
3706bmd
3706bme
3706bmf
3706bmg
3706bmh
3706bmi
3706bmj
3706bmk
3706bml
3706bmm
3706bmn
3706bmo
3706bmp
3706bmq
3706bmr
3706bms
3706bmt
3706bmu
3706bmv
3706bmw
3706bmx
3706bmy
3706bmz
3706bna
3706bnb
3706bnc
3706bnd
3706bne
3706bnf
3706bng
3706bnh
3706bni
3706bnj
3706bnk
3706bnl
3706bnm
3706bnn
3706bno
3706bnp
3706bnq
3706bnr
3706bns
3706bnt
3706bnu
3706bnv
3706bnw
3706bnx
3706bny
3706bnz
3706boa
3706bob
3706boc
3706bod
3706boe
3706bof
3706bog
3706boh
3706boi
3706boj
3706bok
3706bol
3706bom
3706bon
3706boo
3706bop
3706boq
3706bor
3706bos
3706bot
3706bou
3706bov
3706bow
3706box
3706boy
3706boz
3706bpa
3706bpb
3706bpc
3706bpd
3706bpe
3706bpf
3706bpg
3706bph
3706bpi
3706bpj
3706bpk
3706bpl
3706bpm
3706bpn
3706bpo
3706bpp
3706bpq
3706bpr
3706bps
3706bpt
3706bpu
3706bpv
3706bpw
3706bpx
3706bpy
3706bpz
3706bqa
3706bqb
3706bqc
3706bqd
3706bqe
3706bqf
3706bqg
3706bqh
3706bqi
3706bqj
3706bqk
3706bql
3706bqm
3706bqn
3706bqo
3706bqp
3706bqq
3706bqr
3706bqs
3706bqt
3706bqu
3706bqv
3706bqw
3706bqx
3706bqy
3706bqz
3706bra
3706brb
3706brc
3706brd
3706bre
3706brf
3706brg
3706brh
3706bri
3706brj
3706brk
3706brl
3706brm
3706brn
3706bro
3706brp
3706brq
3706brr
3706brs
3706brt
3706bru
3706brv
3706brw
3706brx
3706bry
3706brz
3706bsa
3706bsb
3706bsc
3706bsd
3706bse
3706bsf
3706bsg
3706bsh
3706bsi
3706bsj
3706bsk
3706bsl
3706bsm
3706bsn
3706bso
3706bsp
3706bsq
3706bsr
3706bss
3706bst
3706bsu
3706bsv
3706bsw
3706bsx
3706bsy
3706bsz
3706bta
3706btb
3706btc
3706btd
3706bte
3706btf
3706btg
3706bth
3706bti
3706btj
3706btk
3706btl
3706btm
3706btn
3706bto
3706btp
3706btq
3706btr
3706bts
3706btt
3706btu
3706btv
3706btw
3706btx
3706bty
3706btz
3706bua
3706bub
3706buc
3706bud
3706bue
3706buf
3706bug
3706buh
3706bui
3706buj
3706buk
3706bul
3706bum
3706bun
3706buo
3706bup
3706buq
3706bur
3706bus
3706but
3706buu
3706buv
3706buw
3706bux
3706buy
3706buz
3706bva
3706bvb
3706bvc
3706bvd
3706bve
3706bvf
3706bvg
3706bvh
3706bvi
3706bvj
3706bvk
3706bvl
3706bvm
3706bvn
3706bvo
3706bvp
3706bvq
3706bvr
3706bvs
3706bvt
3706bvu
3706bvv
3706bvw
3706bvx
3706bvy
3706bvz
3706bwa
3706bwb
3706bwc
3706bwd
3706bwe
3706bwf
3706bwg
3706bwh
3706bwi
3706bwj
3706bwk
3706bwl
3706bwm
3706bwn
3706bwo
3706bwp
3706bwq
3706bwr
3706bws
3706bwt
3706bwu
3706bwv
3706bww
3706bwx
3706bwy
3706bwz
3706bxa
3706bxb
3706bxc
3706bxd
3706bxe
3706bxf
3706bxg
3706bxh
3706bxi
3706bxj
3706bxk
3706bxl
3706bxm
3706bxn
3706bxo
3706bxp
3706bxq
3706bxr
3706bxs
3706bxt
3706bxu
3706bxv
3706bxw
3706bxx
3706bxy
3706bxz
3706bya
3706byb
3706byc
3706byd
3706bye
3706byf
3706byg
3706byh
3706byi
3706byj
3706byk
3706byl
3706bym
3706byn
3706byo
3706byp
3706byq
3706byr
3706bys
3706byt
3706byu
3706byv
3706byw
3706byx
3706byy
3706byz
3706bza
3706bzb
3706bzc
3706bzd
3706bze
3706bzf
3706bzg
3706bzh
3706bzi
3706bzj
3706bzk
3706bzl
3706bzm
3706bzn
3706bzo
3706bzp
3706bzq
3706bzr
3706bzs
3706bzt
3706bzu
3706bzv
3706bzw
3706bzx
3706bzy
3706bzz
3706caa
3706cab
3706cac
3706cad
3706cae
3706caf
3706cag
3706cah
3706cai
3706caj
3706cak
3706cal
3706cam
3706can
3706cao
3706cap
3706caq
3706car
3706cas
3706cat
3706cau
3706cav
3706caw
3706cax
3706cay
3706caz
3706cba
3706cbb
3706cbc
3706cbd
3706cbe
3706cbf
3706cbg
3706cbh
3706cbi
3706cbj
3706cbk
3706cbl
3706cbm
3706cbn
3706cbo
3706cbp
3706cbq
3706cbr
3706cbs
3706cbt
3706cbu
3706cbv
3706cbw
3706cbx
3706cby
3706cbz
3706cca
3706ccb
3706ccc
3706ccd
3706cce
3706ccf
3706ccg
3706cch
3706cci
3706ccj
3706cck
3706ccl
3706ccm
3706ccn
3706cco
3706ccp
3706ccq
3706ccr
3706ccs
3706cct
3706ccu
3706ccv
3706ccw
3706ccx
3706ccy
3706ccz
3706cda
3706cdb
3706cdc
3706cdd
3706cde
3706cdf
3706cdg
3706cdh
3706cdi
3706cdj
3706cdk
3706cdl
3706cdm
3706cdn
3706cdo
3706cdp
3706cdq
3706cdr
3706cds
3706cdt
3706cdu
3706cdv
3706cdw
3706cdx
3706cdy
3706cdz
3706cea
3706ceb
3706cec
3706ced
3706cee
3706cef
3706ceg
3706ceh
3706cei
3706cej
3706cek
3706cel
3706cem
3706cen
3706ceo
3706cep
3706ceq
3706cer
3706ces
3706cet
3706ceu
3706cev
3706cew
3706cex
3706cey
3706cez
3706cfa
3706cfb
3706cfc
3706cfd
3706cfe
3706cff
3706cfg
3706cfh
3706cfi
3706cfj
3706cfk
3706cfl
3706cfm
3706cfn
3706cfo
3706cfp
3706cfq
3706cfr
3706cfs
3706cft
3706cfu
3706cfv
3706cfw
3706cfx
3706cfy
3706cfz
3706cga
3706cgb
3706cgc
3706cgd
3706cge
3706cgf
3706cgg
3706cgh
3706cgi
3706cgj
3706cgk
3706cgl
3706cgm
3706cgn
3706cgo
3706cgp
3706cgq
3706cgr
3706cgs
3706cgt
3706cgu
3706cgv
3706cgw
3706cgx
3706cgy
3706cgz
3706cha
3706chb
3706chc
3706chd
3706che
3706chf
3706chg
3706chh
3706chi
3706chj
3706chk
3706chl
3706chm
3706chn
3706cho
3706chp
3706chq
3706chr
3706chs
3706cht
3706chu
3706chv
3706chw
3706chx
3706chy
3706chz
3706cia
3706cib
3706cic
3706cid
3706cie
3706cif
3706cig
3706cih
3706cii
3706cij
3706cik
3706cil
3706cim
3706cin
3706cio
3706cip
3706ciq
3706cir
3706cis
3706cit
3706ciu
3706civ
3706ciw
3706cix
3706ciy
3706ciz
3706cja
3706cjb
3706cjc
3706cjd
3706cje
3706cjf
3706cjg
3706cjh
3706cji
3706cjj
3706cjk
3706cjl
3706cjm
3706cjn
3706cjo
3706cjp
3706cjq
3706cjr
3706cjs
3706cjt
3706cju
3706cjv
3706cjw
3706cjx
3706cjy
3706cjz
3706cka
3706ckb
3706ckc
3706ckd
3706cke
3706ckf
3706ckg
3706ckh
3706cki
3706ckj
3706ckk
3706ckl
3706ckm
3706ckn
3706cko
3706ckp
3706ckq
3706ckr
3706cks
3706ckt
3706cku
3706ckv
3706ckw
3706ckx
3706cky
3706ckz
3706cla
3706clb
3706clc
3706cld
3706cle
3706clf
3706clg
3706clh
3706cli
3706clj
3706clk
3706cll
3706clm
3706cln
3706clo
3706clp
3706clq
3706clr
3706cls
3706clt
3706clu
3706clv
3706clw
3706clx
3706cly
3706clz
3706cma
3706cmb
3706cmc
3706cmd
3706cme
3706cmf
3706cmg
3706cmh
3706cmi
3706cmj
3706cmk
3706cml
3706cmm
3706cmn
3706cmo
3706cmp
3706cmq
3706cmr
3706cms
3706cmt
3706cmu
3706cmv
3706cmw
3706cmx
3706cmy
3706cmz
3706cna
3706cnb
3706cnc
3706cnd
3706cne
3706cnf
3706cng
3706cnh
3706cni
3706cnj
3706cnk
3706cnl
3706cnm
3706cnn
3706cno
3706cnp
3706cnq
3706cnr
3706cns
3706cnt
3706cnu
3706cnv
3706cnw
3706cnx
3706cny
3706cnz
3706coa
3706cob
3706coc
3706cod
3706coe
3706cof
3706cog
3706coh
3706coi
3706coj
3706cok
3706col
3706com
3706con
3706coo
3706cop
3706coq
3706cor
3706cos
3706cot
3706cou
3706cov
3706cow
3706cox
3706coy
3706coz
3706cpa
3706cpb
3706cpc
3706cpd
3706cpe
3706cpf
3706cpg
3706cph
3706cpi
3706cpj
3706cpk
3706cpl
3706cpm
3706cpn
3706cpo
3706cpp
3706cpq
3706cpr
3706cps
3706cpt
3706cpu
3706cpv
3706cpw
3706cpx
3706cpy
3706cpz
3706cqa
3706cqb
3706cqc
3706cqd
3706cqe
3706cqf
3706cqg
3706cqh
3706cqi
3706cqj
3706cqk
3706cql
3706cqm
3706cqn
3706cqo
3706cqp
3706cqq
3706cqr
3706cqs
3706cqt
3706cqu
3706cqv
3706cqw
3706cqx
3706cqy
3706cqz
3706cra
3706crb
3706crc
3706crd
3706cre
3706crf
3706crg
3706crh
3706cri
3706crj
3706crk
3706crl
3706crm
3706crn
3706cro
3706crp
3706crq
3706crr
3706crs
3706crt
3706cru
3706crv
3706crw
3706crx
3706cry
3706crz
3706csa
3706csb
3706csc
3706csd
3706cse
3706csf
3706csg
3706csh
3706csi
3706csj
3706csk
3706csl
3706csm
3706csn
3706cso
3706csp
3706csq
3706csr
3706css
3706cst
3706csu
3706csv
3706csw
3706csx
3706csy
3706csz
3706cta
3706ctb
3706ctc
3706ctd
3706cte
3706ctf
3706ctg
3706cth
3706cti
3706ctj
3706ctk
3706ctl
3706ctm
3706ctn
3706cto
3706ctp
3706ctq
3706ctr
3706cts
3706ctt
3706ctu
3706ctv
3706ctw
3706ctx
3706cty
3706ctz
3706cua
3706cub
3706cuc
3706cud
3706cue
3706cuf
3706cug
3706cuh
3706cui
3706cuj
3706cuk
3706cul
3706cum
3706cun
3706cuo
3706cup
3706cuq
3706cur
3706cus
3706cut
3706cuu
3706cuv
3706cuw
3706cux
3706cuy
3706cuz
3706cva
3706cvb
3706cvc
3706cvd
3706cve
3706cvf
3706cvg
3706cvh
3706cvi
3706cvj
3706cvk
3706cvl
3706cvm
3706cvn
3706cvo
3706cvp
3706cvq
3706cvr
3706cvs
3706cvt
3706cvu
3706cvv
3706cvw
3706cvx
3706cvy
3706cvz
3706cwa
3706cwb
3706cwc
3706cwd
3706cwe
3706cwf
3706cwg
3706cwh
3706cwi
3706cwj
3706cwk
3706cwl
3706cwm
3706cwn
3706cwo
3706cwp
3706cwq
3706cwr
3706cws
3706cwt
3706cwu
3706cwv
3706cww
3706cwx
3706cwy
3706cwz
3706cxa
3706cxb
3706cxc
3706cxd
3706cxe
3706cxf
3706cxg
3706cxh
3706cxi
3706cxj
3706cxk
3706cxl
3706cxm
3706cxn
3706cxo
3706cxp
3706cxq
3706cxr
3706cxs
3706cxt
3706cxu
3706cxv
3706cxw
3706cxx
3706cxy
3706cxz
3706cya
3706cyb
3706cyc
3706cyd
3706cye
3706cyf
3706cyg
3706cyh
3706cyi
3706cyj
3706cyk
3706cyl
3706cym
3706cyn
3706cyo
3706cyp
3706cyq
3706cyr
3706cys
3706cyt
3706cyu
3706cyv
3706cyw
3706cyx
3706cyy
3706cyz
3706cza
3706czb
3706czc
3706czd
3706cze
3706czf
3706czg
3706czh
3706czi
3706czj
3706czk
3706czl
3706czm
3706czn
3706czo
3706czp
3706czq
3706czr
3706czs
3706czt
3706czu
3706czv
3706czw
3706czx
3706czy
3706czz
3706daa
3706dab
3706dac
3706dad
3706dae
3706daf
3706dag
3706dah
3706dai
3706daj
3706dak
3706dal
3706dam
3706dan
3706dao
3706dap
3706daq
3706dar
3706das
3706dat
3706dau
3706dav
3706daw
3706dax
3706day
3706daz
3706dba
3706dbb
3706dbc
3706dbd
3706dbe
3706dbf
3706dbg
3706dbh
3706dbi
3706dbj
3706dbk
3706dbl
3706dbm
3706dbn
3706dbo
3706dbp
3706dbq
3706dbr
3706dbs
3706dbt
3706dbu
3706dbv
3706dbw
3706dbx
3706dby
3706dbz
3706dca
3706dcb
3706dcc
3706dcd
3706dce
3706dcf
3706dcg
3706dch
3706dci
3706dcj
3706dck
3706dcl
3706dcm
3706dcn
3706dco
3706dcp
3706dcq
3706dcr
3706dcs
3706dct
3706dcu
3706dcv
3706dcw
3706dcx
3706dcy
3706dcz
3706dda
3706ddb
3706ddc
3706ddd
3706dde
3706ddf
3706ddg
3706ddh
3706ddi
3706ddj
3706ddk
3706ddl
3706ddm
3706ddn
3706ddo
3706ddp
3706ddq
3706ddr
3706dds
3706ddt
3706ddu
3706ddv
3706ddw
3706ddx
3706ddy
3706ddz
3706dea
3706deb
3706dec
3706ded
3706dee
3706def
3706deg
3706deh
3706dei
3706dej
3706dek
3706del
3706dem
3706den
3706deo
3706dep
3706deq
3706der
3706des
3706det
3706deu
3706dev
3706dew
3706dex
3706dey
3706dez
3706dfa
3706dfb
3706dfc
3706dfd
3706dfe
3706dff
3706dfg
3706dfh
3706dfi
3706dfj
3706dfk
3706dfl
3706dfm
3706dfn
3706dfo
3706dfp
3706dfq
3706dfr
3706dfs
3706dft
3706dfu
3706dfv
3706dfw
3706dfx
3706dfy
3706dfz
3706dga
3706dgb
3706dgc
3706dgd
3706dge
3706dgf
3706dgg
3706dgh
3706dgi
3706dgj
3706dgk
3706dgl
3706dgm
3706dgn
3706dgo
3706dgp
3706dgq
3706dgr
3706dgs
3706dgt
3706dgu
3706dgv
3706dgw
3706dgx
3706dgy
3706dgz
3706dha
3706dhb
3706dhc
3706dhd
3706dhe
3706dhf
3706dhg
3706dhh
3706dhi
3706dhj
3706dhk
3706dhl
3706dhm
3706dhn
3706dho
3706dhp
3706dhq
3706dhr
3706dhs
3706dht
3706dhu
3706dhv
3706dhw
3706dhx
3706dhy
3706dhz
3706dia
3706dib
3706dic
3706did
3706die
3706dif
3706dig
3706dih
3706dii
3706dij
3706dik
3706dil
3706dim
3706din
3706dio
3706dip
3706diq
3706dir
3706dis
3706dit
3706diu
3706div
3706diw
3706dix
3706diy
3706diz
3706dja
3706djb
3706djc
3706djd
3706dje
3706djf
3706djg
3706djh
3706dji
3706djj
3706djk
3706djl
3706djm
3706djn
3706djo
3706djp
3706djq
3706djr
3706djs
3706djt
3706dju
3706djv
3706djw
3706djx
3706djy
3706djz
3706dka
3706dkb
3706dkc
3

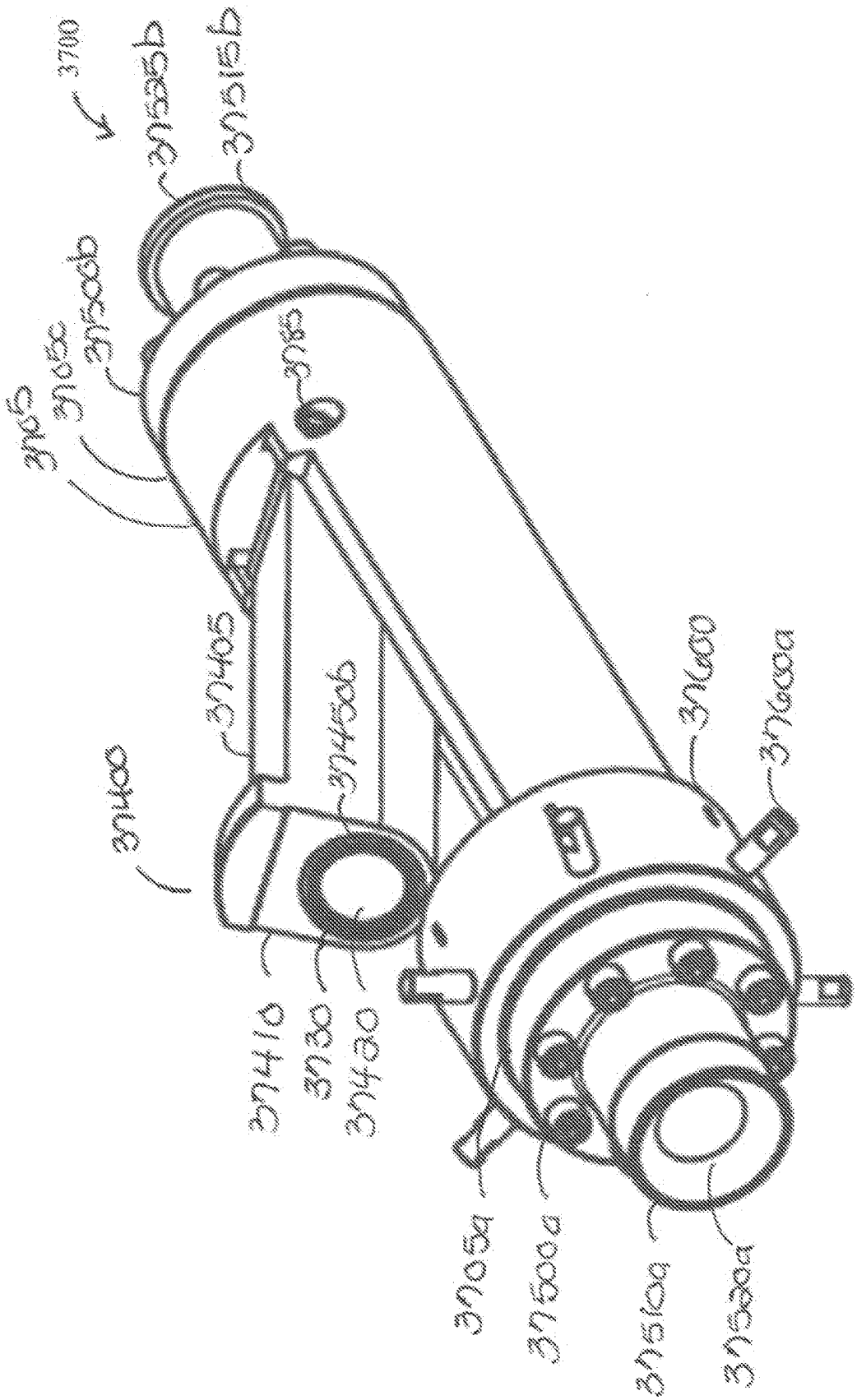
3700
3705
3705c
3705b
3705a
3705a
3700a
3710a
3720a
3710
3730
3740
3740b
3740b
3740b
3700
3700a

FIG. 37L

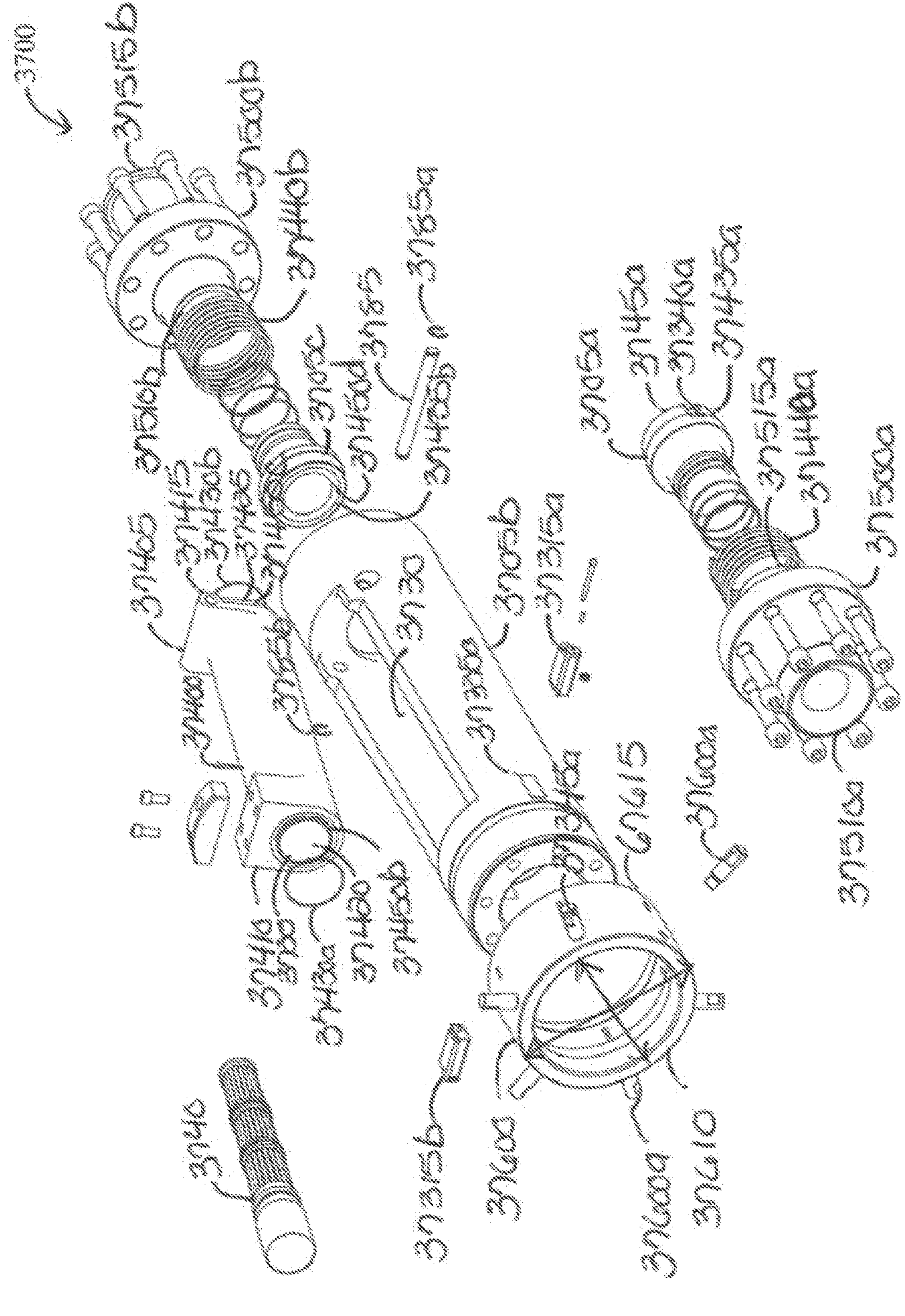

FIG. 37M

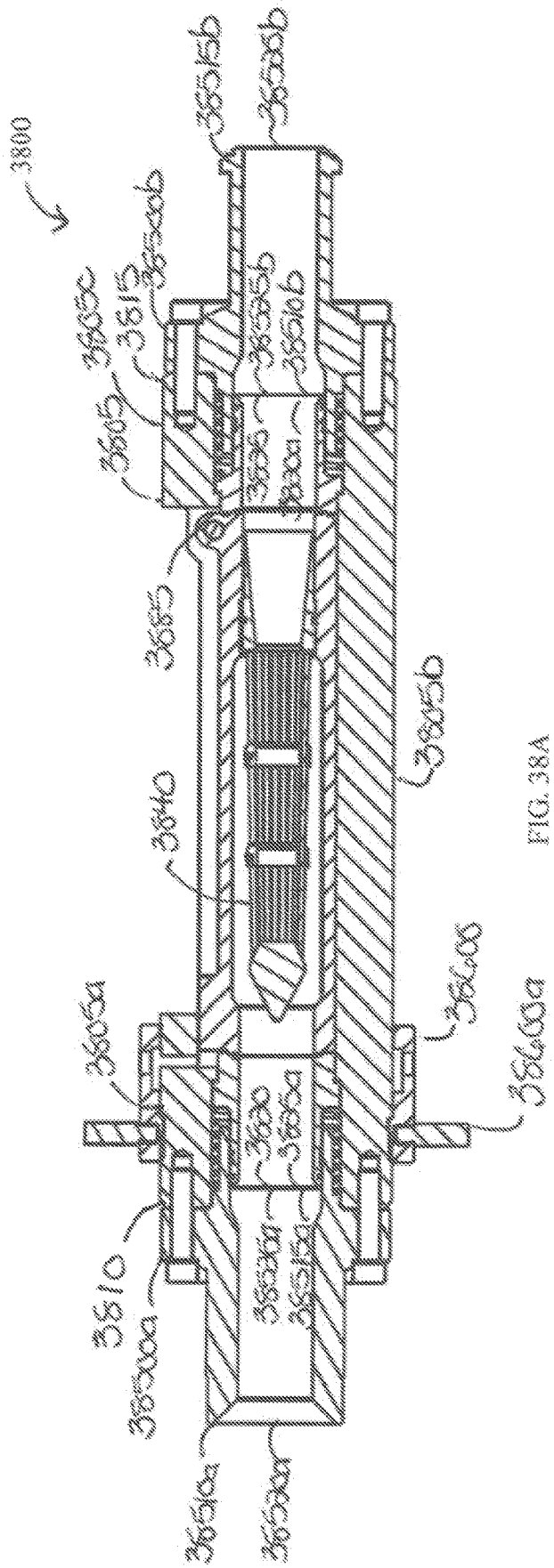

FIG. 38A

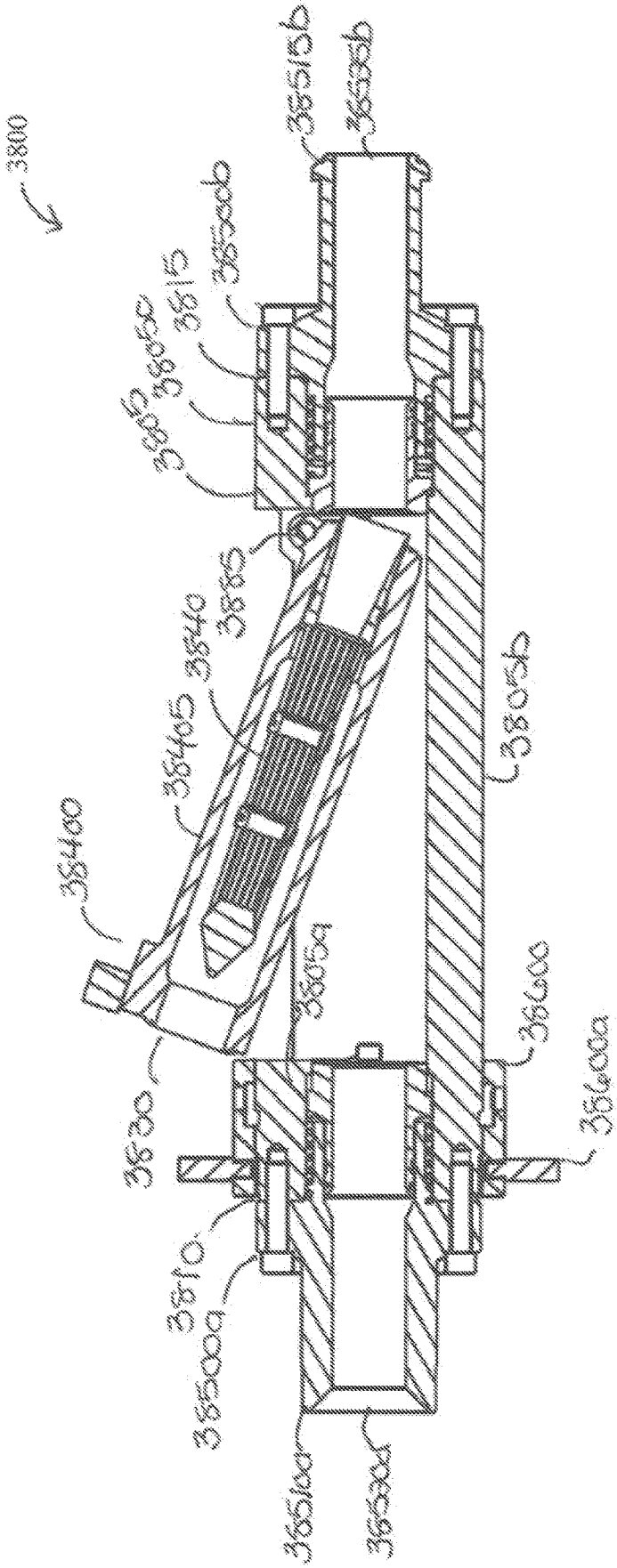

FIG. 38B

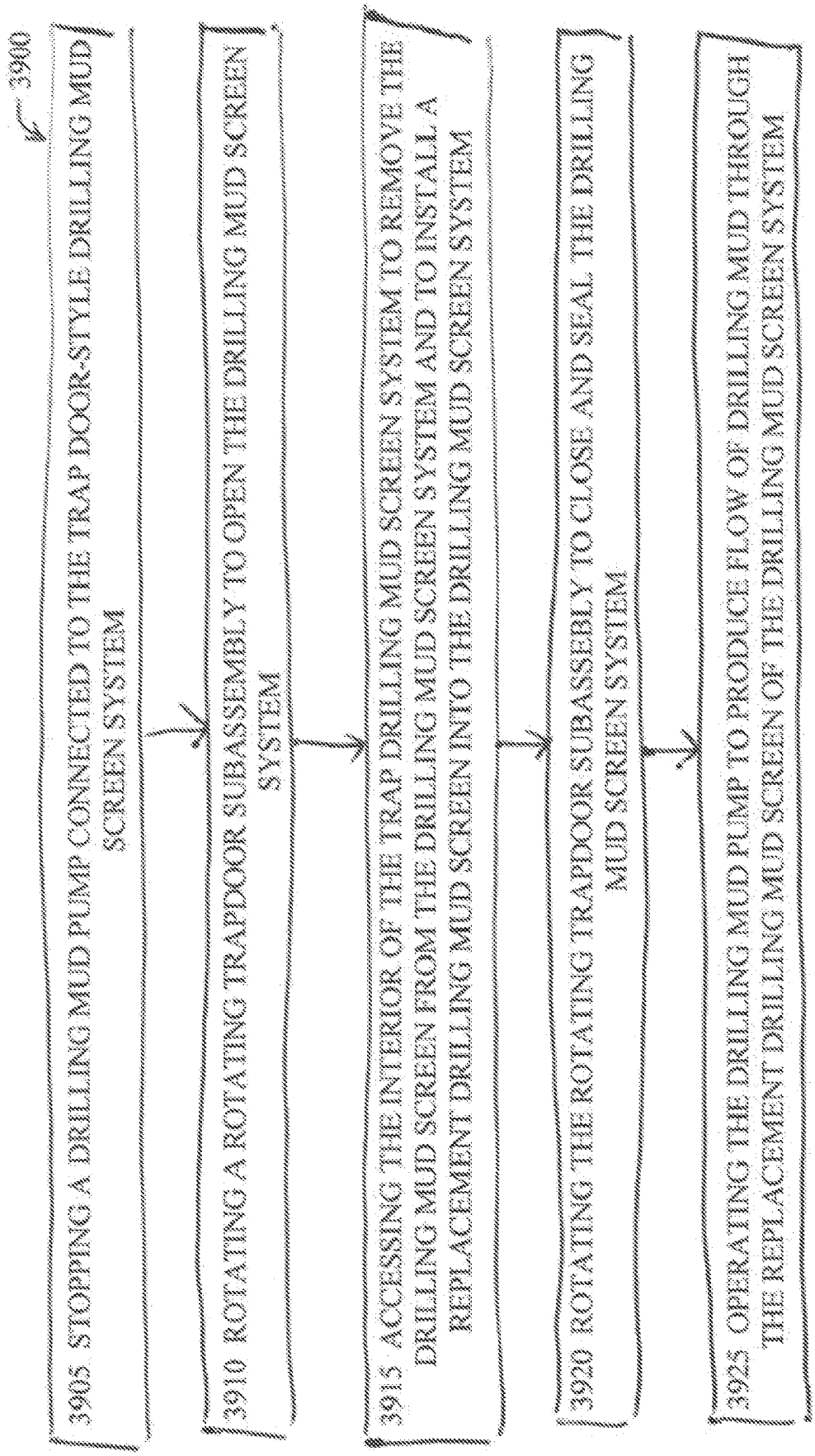
3900
3905 STOPPING A DRILLING MUD PUMP CONNECTED TO THE TRAP DOOR-STYLE DRILLING MUD SCREEN SYSTEM
3910 ROTATING A ROTATING TRAPDOOR SUBASSEMBLY TO OPEN THE DRILLING MUD SCREEN SYSTEM
3915 ACCESSING THE INTERIOR OF THE TRAP DRILLING MUD SCREEN SYSTEM TO REMOVE THE DRILLING MUD SCREEN FROM THE DRILLING MUD SCREEN SYSTEM AND TO INSTALL A REPLACEMENT DRILLING MUD SCREEN INTO THE DRILLING MUD SCREEN SYSTEM
3920 ROTATING THE ROTATING TRAPDOOR SUBASSEBLY TO CLOSE AND SEAL THE DRILLING MUD SCREEN SYSTEM
3925 OPERATING THE DRILLING MUD PUMP TO PRODUCE FLOW OF DRILLING MUD THROUGH THE REPLACEMENT DRILLING MUD SCREEN OF THE DRILLING MUD SCREEN SYSTEM

FIG. 39

TRAPDOOR-STYLE DRILLING MUD SCREEN SYSTEM AND METHODS THEREOF

PRIOR RELATED APPLICATIONS

This application is a continuation-in-part of U.S. Nonprovisional patent application Ser. No. 17/126,415 entitled "Valve-Style Drilling Mud Screen System and Methods Thereof," filed on Dec. 18, 2020, which is a continuation-in-part of U.S. Nonprovisional patent application Ser. No. 15/959,070 entitled "Drilling Mud Screen System and Methods Thereof," filed on Apr. 20, 2018, which claims the benefit of U.S. Provisional Patent Application Ser. No. 62/598,521 entitled "Improved Drilling Mud Screen System and Methods Thereof," filed on Dec. 14, 2017, and U.S. Provisional Patent Application Ser. No. 62/491,700 entitled "Drilling Mud Screen System and Methods Thereof," filed on Apr. 28, 2017. All of said priority applications are incorporated by references in their entirety.

FEDERALLY SPONSORED RESEARCH STATEMENT

Not Applicable (N/A)

REFERENCE TO MICROFICHE APPENDIX

N/A

FIELD OF INVENTION

The present invention relates generally to an improved drilling mud screen system and methods thereof and, more particularly, to an improved drilling mud screen system with a drilling mud screen puller/installer tool and methods thereof.

BACKGROUND OF THE INVENTION

Many drilling rigs use drill pipe mud screens that are in-line with the drilling assembly. Typically, drilling mud screens, commonly Type 3 drilling mud screens, are installed on the drill floor or at the bottom of the drill string. If the drilling mud screen is installed on the drill floor, the drilling mud screen must be reinstalled or replaced every time a section of stand pipe is added to the drill string. In other words, the drilling mud screens must be installed at the top of each 90-foot stand of pipe above the rig crew. As each stand of drill pipe is drilled down to the derrick floor, the top drive sub-connection is separated from the drill pipe stand connection and the drilling mud screen is installed to the top of the next stand of pipe going in the hole. This is a dangerous practice that can result in accidents to the crew below.

Although the Type 3 drilling mud screen appears to work for single-shoulder API rotary shouldered connection types, it does not work for proprietary double-shoulder high-strength connection types that eliminate the space where the drilling mud screen is typically located inside the pipe. Instead, the nose of the double-shoulder pin connection on the top of the drive sub-connection is decreased to the exact width of the drilling mud screen flange, so that "theoretically" the nose of the double-shoulder pin connection may have the same contact inside the mating drill pipe box and same shoulder bearing stress at optimal connection make-up torque as it would in an unmodified assembly. Further, the

dimensions of the shortened nose of the double-shoulder pin may not be adequate for the selected drilling mud screen flange. When the dimensions of the shortened nose of the double-shoulder pin are outside the acceptable connection tolerances of about ±0.000-inch to about ±0.0010-inch, the mating pin and/or box is damaged. Further, rig crews often forget to install the drilling mud screen. This oversight frequently results in damage as the shortened nose of the double-shoulder pin continuously tries to make-up inside the box but fails. These are dangerous practices that can result in drilling mud leaking onto the drilling rig floor creating a slip hazard and/or in a double-shoulder connection failure. Further, this is an expensive practice that rapidly consumes drilling mud screens long before they need to be replaced.

If the drilling mud screen is installed at the bottom of the drill string, the drilling mud screen must be brought to the surface to be replaced. This is an inefficient practice that can results in lost drilling time.

Thus, an improved drilling mud screen system with a drilling mud screen puller/installer tool is needed to eliminate these problems.

SUMMARY OF THE INVENTION

In an embodiment, a drilling mud screen system comprises a first body having a first drilling mud inlet, an optional first drilling mud inlet, a first drilling mud outlet and a drilling mud screen access port, an optional drilling mud screen insert, a drilling mud screen, and a first end cap.

In an embodiment, the first body has a first end, a second end and a first centerline from the first end to the second end.

In an embodiment, the first drilling mud inlet has a second centerline forming a first angle with the first centerline and extending to the first centerline, wherein the first drilling mud inlet is offset from the first end of the first body. In an embodiment, the first angle is from about 20-degrees to about 120-degrees.

In an embodiment, the optional first drilling mud inlet has an optional second centerline forming an optional first angle with the first centerline and extending to the first centerline and forming an optional second angle with the second centerline, wherein the optional first drilling mud inlet is offset from the first end of the first body and wherein the optional first drilling mud inlet is offset from the second centerline radially about the first centerline. In an embodiment, the optional first angle is from about 20-degrees to about 120-degrees.

In an embodiment, the first drilling mud outlet is at the second end of the first body.

In an embodiment, the drilling mud screen access port is at the first end of the first body. In an embodiment, the first end cap is disposed within the drilling mud access port to close and seal the drilling mud access port.

In an embodiment, the drilling mud screen is disposed within the first body between the first drilling mud inlet and the first drilling mud outlet.

In an embodiment, the drilling mud screen comprises a second body having a second drilling mud inlet, a second drilling mud outlet, a second end cap and a filter.

In an embodiment, the drilling mud screen is constructed from AISI 4145 or equivalent, stainless steel or combinations thereof. In an embodiment, the filter has a hardened coating.

In an embodiment, the optional drilling mud screen insert is disposed within the first body between the first drilling mud inlet and the drilling mud screen.

In an embodiment, the second body has a first end and a second end, wherein the first end and/or the second end of the body has a means to engage a drilling mud screen puller/installer tool.

In an embodiment, the second drilling mud inlet is at the first end of the second body.

In an embodiment, the filter has a first end, a second end, and openings, wherein the filter is fluidly connected to the second end of the second body via a first connection and/or an optional first end retaining ring. In an embodiment, the filter is straight or tapered from the first end to the second end of the filter. In an embodiment, the filter is tapered from the first end to the second end of the filter.

In an embodiment, the filter comprises a plurality of rods having a first end and a second end, wherein the rods are spaced a distance apart to form the openings in the filter. In an embodiment, the rods are tapered from the first end to the second end of the filter.

In an embodiment, the filter comprises a formed sheet having drilled holes or slots spaced a distance apart to form the openings in the filter. In an embodiment, the drilled holes or slots are drilled in any configuration and orientation from the first end to the second end of the filter. In an embodiment, the drilled holes or slots are drilled in offset rows or straight rows from the first end to the second end of the filter.

In an embodiment, the second drilling mud outlet is at the openings of the filter.

In an embodiment, the second end cap is fluidly connected at the second end of the filter via a second connection. In an embodiment, the filter has an optional retaining ring disposed between the first connection and the second connection.

In an embodiment, the first body comprises a third body and a fourth body, and wherein the third body is fluidly connected to the fourth body via a union.

In an embodiment, one or more of the first body, the second body, the third body and the fourth body are constructed from AISI 4130/75k or equivalent material, AISI 4145 or equivalent, or combinations thereof.

In an embodiment, the first body has a first portion and a second portion surrounding the filter, and wherein a second inner diameter of the second portion is larger than a first inner diameter of the first portion to provide a high flow rate of drilling mud through the filter.

In an embodiment, the second end cap is a flat plate or a flat plate with holes or slots. In an embodiment, the second end cap is an inverted cone or an inverted cone with holes or slots.

In an embodiment, the first centerline of the first body and an inner surface of the second end cap form a cap angle, wherein the cap angle is from about 30-degrees to about 60-degrees. In an embodiment, the first centerline of the first body and an inner surface of the second end cap form a cap angle, wherein the cap angle is from about 35-degrees to about 45-degrees.

In an embodiment, a drilling mud screen system, comprises a first body having a first drilling mud inlet, a first drilling mud outlet and a drilling mud screen access port, a drilling mud screen, a plug and a first end cap.

In an embodiment, the first body has a first end, a second end and a first centerline from the first end to the second end.

In an embodiment, the first drilling mud inlet has a second centerline forming a first angle with the first centerline and extending to the first centerline, wherein the first drilling mud inlet is offset from the first end of the first body.

In an embodiment, the first drilling mud outlet is at the second end of the first body.

In an embodiment, the drilling mud screen access port is at the first end of the first body. In an embodiment, the first end cap is disposed within the drilling mud access port to close and seal the drilling mud access port.

In an embodiment, the first end cap is disposed within the drilling mud access port to close and seal the drilling mud access port.

In an embodiment, the plug is disposed within the first body between the drilling mud access port and the first drilling mud inlet.

In an embodiment, the drilling mud screen is disposed within the first body between the first drilling mud inlet and the first drilling mud outlet.

In an embodiment, the drilling mud screen comprises a second body having a second drilling mud inlet, a second drilling mud outlet, a second end cap and a filter.

In an embodiment, the drilling mud screen is constructed from AISI 4145 or equivalent, stainless steel or combinations thereof. In an embodiment, the optional drilling mud screen insert, the optional first end retaining ring and/or the optional retaining ring is constructed from AISI 4145 or equivalent, stainless steel or combinations thereof and/or has a hardened coating. In an embodiment, the filter has a hardened coating.

In an embodiment, the second body has a first end and a second end, wherein the first end and/or the second end of the body has a means to engage a drilling mud screen puller/installer tool.

In an embodiment, the second drilling mud inlet is at the first end of the second body.

In an embodiment, the filter has a first end, a second end, and openings, wherein the filter is fluidly connected to the second end of the second body. In an embodiment, the filter is straight or tapered from the first end to the second end of the filter. In an embodiment, the filter is tapered from the first end to the second end of the filter.

In an embodiment, the filter comprises a plurality of rods having a first end and a second end, wherein the rods are spaced a distance apart to form the openings in the filter. In an embodiment, the rods are tapered from the first end to the second end of the filter.

In an embodiment, the filter comprises a formed sheet having drilled holes or slots spaced a distance apart to form the openings in the filter. In an embodiment, the drilled holes or slots are drilled in any configuration and orientation from the first end to the second end of the filter. In an embodiment, the drilled holes or slots are drilled in offset rows or straight rows from the first end to the second end of the filter.

In an embodiment, the second drilling mud outlet is at the openings of the filter.

In an embodiment, the end cap is fluidly connected at the second end of the filter.

In an embodiment, the plug comprises a third body having a first end and a second end, wherein the first end of the third body has a means to engage a drilling mud screen puller/installer tool.

In an embodiment, the first end of the third body has an optional cavity extending towards but not through the flow surface of the plug.

In an embodiment, the third body has an optional port extending from an outer surface of the plug into the optional cavity.

In an embodiment, the second end of the third body has a flow surface to direct the drilling mud from the first drilling mud inlet to the second drilling mud inlet. In an embodiment, the flow surface may be selected from the group

consisting of a backwards "J" shape, a curved shape, an "L" shape and combinations and variations thereof.

In an embodiment, one or more of the first body, the second body and the third body are constructed from AISI 4130/75k or equivalent material, AISI 4145 or equivalent, or combinations thereof.

In an embodiment, the first body has a first portion and a second portion surrounding the filter, and wherein a second inner diameter of the second portion is larger than a first inner diameter of the first portion to provide a high flow rate of drilling mud through the filter.

In an embodiment, the second end cap is a flat plate or a flat plate with holes or slots. In an embodiment, the second end cap is an inverted cone or an inverted cone with holes or slots.

In an embodiment, the first centerline of the first body and an inner surface of the second end cap form a cap angle, wherein the cap angle is from about 30-degrees to about 60-degrees. In an embodiment, the first centerline of the first body and an inner surface of the second end cap form a cap angle, wherein the cap angle is from about 35-degrees to about 45-degrees.

In an embodiment, the drilling mud screen system further comprises a transducer subassembly. In an embodiment, the transducer subassembly comprises a transducer body having a drilling mud inlet, a drilling mud outlet and a transducer access port, and a transducer.

In an embodiment, the transducer body has a first end, a second end and a first centerline from the first end to the second end.

In an embodiment, the drilling mud inlet is at the first end of the transducer body.

In an embodiment, the first drilling mud outlet is at the second end of the transducer body.

In an embodiment, the transducer access port has a second centerline forming a transducer angle with the first centerline and extending to the first centerline, wherein the transducer access port is offset from the first end of the transducer body. In an embodiment, the transducer angle is from about 20-degrees to about 120-degrees.

In an embodiment, the transducer is disposed within the transducer access port to close and seal the transducer access port.

In an embodiment, the drilling mud outlet of the transducer subassembly is fluidly connected to the first drilling mud inlet of the drilling mud screen system.

In an embodiment, a drilling mud screen puller/installer tool comprises a hollow body, a striker plate, a shaft having a puller/installer plate and an optional stop plate, groove or painted line, a movable sleeve disposed around a portion of the shaft, and a handle.

In an embodiment, the hollow body has a first end, a second end and a first length.

In an embodiment, the striker plate has a first end and a second end, wherein the first end striker plate is connected to the second end of the body via a first connection.

In an embodiment, the shaft has a first end, a second end and a second length, wherein the second end of the striker plate is connected to the first end of the shaft via a second connection.

In an embodiment, the puller/installer plate has a first end and a second end, wherein the second end of the shaft is connected to the first end of the puller/installer plate via a fourth connection. In an embodiment, the puller/installer plate has a means to engage a drilling mud screen. In an embodiment, the puller/installer plate has one or more extensions to fit an outlet of a first portion and/or an inlet of a second portion of the body of the drilling mud screen and to rotationally engage a shoulder inside the inlet of the second portion of the body of the drilling mud screen.

In an embodiment, the optional stop plate, grove or painted line on the shaft is offset from the first end of the body or the second end of the body. In an embodiment, the stop plate is connected to the shaft via a fifth connection.

In an embodiment, the movable sleeve has a first end, a second end and a third length, wherein the movable sleeve is disposed around a portion of the shaft.

In an embodiment, the handle is connected to the movable sleeve via a third connection.

In an embodiment, one or more of the first, second, third, fourth and fifth connections are welds.

In an embodiment, one or more of the body and the movable sleeve are constructed from AISI 4140 or equivalent, stainless steel or combinations thereof.

In an embodiment, one or more of the handle and the shaft are constructed from AISI 1018 or equivalent.

In an embodiment, one or more of the rounded end, the striker plate and the puller/installer plate are constructed from stainless steel.

In an embodiment, a method of installing a drilling mud screen system comprises a) providing a drilling mud screen system, b) stopping a drilling mud pump to fluidly connect the drilling mud screen to the drilling mud pump, c) fluidly connecting the drilling mud screen system in line with and immediately upstream or downstream of the drilling mud pump; and d) operating the drilling mud pump to produce flow of drilling mud through the drilling mud screen system.

In an embodiment, step c) comprises fluidly connecting a drilling mud inlet of the drilling mud screen system to a high-pressure outlet of the drilling mud pump and fluidly connecting a drilling mud outlet of the drilling mud screen system to a vibrator hose or a standpipe.

In an embodiment, step c) comprises fluidly connecting a drilling mud inlet of the drilling mud screen system to a high-pressure inlet of the drilling mud pump and fluidly connecting a drilling mud outlet of the drilling mud screen system to an inlet of a vibrator hose.

In an embodiment, step c) comprises fluidly connecting a drilling mud inlet of the drilling mud screen system to an outlet of a vibrator hose and a drilling mud outlet to an inlet of a standpipe.

In an embodiment, step c) comprises fluidly connecting a drilling mud inlet of the drilling mud screen system to an outlet of a first portion of a standpipe and a drilling mud outlet to an inlet of a second portion of the standpipe.

In an embodiment, step e) comprises filtering or screening debris from drilling mud.

In an embodiment, a method of installing and using a drilling mud screen system comprises a) providing the drilling mud screen system; b) stopping a drilling mud pump; c) fluidly connecting a first transducer subassembly, having a transducer, in line with and downstream of the drilling mud pump and fluidly connecting the drilling mud screen system in line with and immediately downstream of the first transducer subassembly; and d) operating the drilling mud pump to produce flow of drilling mud through the first transducer subassembly and the drilling mud screen system.

In an embodiment, the method further comprises step (f) monitoring the transducer of the first transducer subassembly for property information immediately upstream of the drilling mud screen system and step (g) using the property information to determine a status of the drilling mud screen system.

In an embodiment, step (c) comprises fluidly connecting a first transducer subassembly, having a transducer, in line with and downstream of the drilling mud pump and fluidly connecting the drilling mud screen system in line with and immediately downstream of the first transducer subassembly, and fluidly connecting a gate valve in line with and immediately downstream of the drilling mud screen system, fluidly connecting a second transducer subassembly, having a low torque plug valve, in line with and immediately downstream of the gate valve and wherein step (d) comprises operating the drilling mud pump to produce flow of drilling mud through the first transducer subassembly, the drilling mud screen system, the gate valve and the second transducer subassembly.

In an embodiment, the method further comprises step (e) stopping the drilling mud pump, step (f) closing the gate valve to isolate the drilling mud screen system, and step (g) pumping cement through the low torque plug valve of the second transducer subassembly, a vibrator hose, a stand pipe, a top drive and a case running tool (CRT).

In an embodiment, a method of removing and replacing a drilling mud screen comprises a) providing the drilling mud screen system; b) stopping a drilling mud pump connected to the drilling mud screen system; c) opening a drilling mud screen access port in the drilling mud screen system to remove and replace a drilling mud screen; d) accessing the interior of the drilling mud screen system to pull the plug from the drilling mud screen system; e) accessing the interior of the drilling mud screen system to pull the drilling mud screen from the drilling mud screen system and to install a replacement drilling mud screen into the drilling mud screen system; f) accessing the interior of the drilling mud screen system to reinstall the plug into the drilling mud screen system; g) closing the drilling mud screen access port in the drilling mud screen system; and h) operating the drilling mud pump to produce flow of drilling mud through the drilling mud screen system.

In an embodiment, step d) comprises using a puller/installer plate and/or a rounded end of a puller/installer tool to engage and pull the plug from the drilling mud screen system. In an embodiment, step d) comprises using a puller/installer plate and/or a rounded end of a puller/installer tool to engage and pull the plug from the drilling mud screen system and, optionally using a stop plate, groove or painted line of the puller/installer tool to determine when the replacement drilling mud screen is installed into the drilling mud screen system.

In an embodiment, step e) comprises using a puller/installer plate of a puller/installer tool to engage and pull the drilling mud screen from the drilling mud screen system. In an embodiment, step e) comprises using a puller/installer plate and/or a rounded end of a puller/installer tool to install the replacement drilling mud screen into the drilling mud screen system.

In an embodiment, step f) comprises using a puller/installer plate and/or a rounded end of a puller/installer tool to reinstall the plug into the drilling mud screen system.

In an embodiment, a valve-style drilling mud screen system comprises a first body, a first drilling mud inlet, a first drilling mud outlet, a rotating subassembly, a pivot subassembly and a drilling mud screen. In an embodiment, the first body has a first portion, a second portion and a third portion. In an embodiment, the first drilling mud inlet is at a first end of the first portion of the body. In an embodiment, the first drilling mud outlet is at a second end of the third portion of the body.

In an embodiment, the rotating subassembly is disposed within the second portion of the first body. In an embodiment, the rotating subassembly has a first end and a second end. In an embodiment, the first portion of the first body is fluidly connected to the first end of the rotating subassembly. In an embodiment, the second end of the rotating subassembly is fluidly connected to the third portion of the first body.

In an embodiment, the pivot subassembly is attached to the rotating subassembly through the second portion of the first body.

In an embodiment, the drilling mud screen is disposed within the rotating subassembly between the first drilling mud inlet and the first drilling mud outlet.

In an embodiment, the rotating subassembly comprises a second body, a third body and a fourth body. In an embodiment, the second body has a first end and a second end. In an embodiment, the third body has a first end and a second end. In an embodiment, the fourth body has a first end and a second end. In an embodiment, the first end of the second body is fluidly connected the second end of the first portion of the first body. In an embodiment, the second end of the second body is rotatably sealable against the first end of the third body. In an embodiment, the second end of the third body is rotatably sealable against the first end of the fourth body. In an embodiment, the second end of the fourth body is fluidly connected to a first end of the third portion of the first body.

In an embodiment, the pivot subassembly comprises a first shaft stud, a second shaft stud and a pivot shaft. In an embodiment, the first shaft stud and/or the second shaft stud are attached to the rotating subassembly through the second portion of the first body. In an embodiment, the pivot shaft is attached to first shaft stud or the second shaft stud.

In an embodiment, the pivot subassembly further comprises a pivot drive. In an embodiment, the pivot drive is attached to the pivot shaft.

In an embodiment, the drilling mud screen system further comprises a camming seal separator capable of separating a first seal and/or a second seal. In an embodiment, the camming seal separator comprises a face-roller camming mechanism or a push-rod camming mechanism.

In an embodiment, the camming seal separator comprises a first cam roller, a first cam bracket and a first cam track.

In an embodiment, the first roller bracket is attached to a first end of a second body of the rotating subassembly. In an embodiment, the first cam roller is attached to the first roller bracket.

In an embodiment, the first cam track is attached to a first end of a third body of the rotating subassembly. In an embodiment, the first cam track has a first recess portion to allow the second end of the second body of the rotating subassembly to close against the first end of the third body of the rotating subassembly.

In an embodiment, the camming seal separator further comprises a second cam roller, a second roller bracket and a second cam track.

In an embodiment, the second roller bracket is attached to the first end of a fourth body of the rotating subassembly. In an embodiment, the second cam roller is attached to the second roller bracket.

In an embodiment, the second cam track is attached to the second end of the third body of the rotating subassembly. In an embodiment, the second cam track has a second recessed portion to allow the second end of the third body of the rotating subassembly to close against the first end of the fourth body of the rotating subassembly.

In an embodiment, the camming seal separator comprises a first pivot pin, a first push rod, a first cam roller and a cam.

In an embodiment, the first pivot pin has a first end and a second end. In an embodiment, the first end of the first pivot pin is attached to the second body of the rotating subassembly through the first portion of the first body.

In an embodiment, the first push rod has a first end and a second end. In an embodiment, the first end of the first push rod is attached to the second end of the first pivot pin.

In an embodiment, the first cam roller is attached to the second end of the first push rod.

In an embodiment, the cam is attached to the pivot shaft. In an embodiment, the cam is sized and shaped such that the second end of the second body of the rotating subassembly closes against the first end of the third body of the rotating subassembly to form the first seal. In an embodiment, the cam is be sized and shaped such that the second end of the third body of the rotating subassembly closes against the first end of the fourth body of the rotating subassembly to form the second seal.

In an embodiment, the camming seal separator further comprises a second pivot pin, a second push rod, and a second cam roller.

In an embodiment, the second pivot pin has a first end and a second end. In an embodiment, the first end of the second pivot pin is attached to the third body of the rotating subassembly through the third portion of the first body.

In an embodiment, the second push rod has a first end and a second end. In an embodiment, the first end of the second push rod is attached to the second end of the second pivot pin.

In an embodiment, the second cam roller is attached to the second end of the second push rod.

In an embodiment, the camming seal separator further comprises a first guide block and a first spring.

In an embodiment, the first push rod is disposed through the first guide block.

In an embodiment, the first spring is disposed between the first push rod and the first guide block.

In an embodiment, the camming seal separator further comprises a second guide block and a second spring.

In an embodiment, the second push rod is disposed through the second guide block.

In an embodiment, the second spring is disposed between the second push rod and the second guide block.

In an embodiment, the first guide block and/or the second guide block are attached to the second portion of the first body.

In an embodiment, the drilling mud screen comprises a second body, a filter, a first end cap, a second drilling mud inlet and a second drilling mud outlet.

In an embodiment, the second body has a first end and a second end and a first centerline from the first end to the second end.

In an embodiment, the filter has a first end, a second end, and openings. In an embodiment, the first end of the filter is fluidly connected to the first end of the second body via a first connection and/or an optional first end retaining ring.

In an embodiment, the first end cap is fluidly connected at the second end of the filter via a second connection. In an embodiment, the filter has an optional retaining ring disposed between the first connection and the second connection.

In an embodiment, the second drilling mud inlet is at the first end of the second body.

In an embodiment, the second drilling mud outlet at the openings of the filter.

In an embodiment, one or more of the first body and the second body are constructed from AISI 4130/75k or equivalent material, AISI 4145 or equivalent, or combinations thereof. In an embodiment, one or more of the first body, and the second body are constructed from AISI 4130/75k or equivalent material, AISI 4145 or equivalent, or combinations thereof.

In an embodiment, the filter comprises a plurality of rods having a first end and a second end. In an embodiment, the rods are spaced a distance apart to form the openings in the filter. In an embodiment, the rods are tapered from the first end to the second end.

In an embodiment, the filter comprises a formed sheet having drilled holes or slots spaced a distance apart to form the openings in the filter. In an embodiment, the drilled holes or slots are drilled in offset rows or straight rows from the first end to the second end. In an embodiment, the filter is tapered from the second end to the first end.

In an embodiment, the first end cap is a flat plate or a flat plate with holes or slots.

In an embodiment, the first end cap is an inverted cone or an inverted cone with holes or slots.

In an embodiment, the first centerline of the second body and an outer surface of the first end cap forms a cap angle. In an embodiment, the cap angle is from about 30-degrees to about 90-degrees. In an embodiment, the cap angle is from about 35-degrees to about 45-degrees.

In an embodiment, the filter, the first end retaining ring and/or the retaining ring are constructed from AISI 4145 or equivalent, stainless steel or combinations thereof.

In an embodiment, the filter, the first end retaining ring and/or the retaining ring has a hardened coating. In an embodiment, one or more of the filter, the first end retaining ring and/or the retaining ring has a Carbide coating with about 6% Cobalt binder.

In an embodiment, the drilling mud screen system further comprises a transducer subassembly. In an embodiment, the transducer subassembly comprises a transducer body having a drilling mud inlet, a drilling mud outlet and a transducer access port, and a transducer.

In an embodiment, the transducer body has a first end, a second end and a first centerline from the first end to the second end.

In an embodiment, the drilling mud inlet is at the first end of the transducer body.

In an embodiment, the first drilling mud outlet is at the second end of the transducer body.

In an embodiment, the transducer access port has a second centerline forming a transducer angle with the first centerline and extending to the first centerline, wherein the transducer access port is offset from the first end of the transducer body. In an embodiment, the transducer angle is from about 20-degrees to about 120-degrees.

In an embodiment, the transducer is disposed within the transducer access port to close and seal the transducer access port.

In an embodiment, the drilling mud outlet of the transducer subassembly is fluidly connected to the first drilling mud inlet of the drilling mud screen system.

In an embodiment, the drilling mud outlet of the transducer subassembly is fluidly connected to the first drilling mud inlet of the drilling mud screen system via a cross-over connection.

In an embodiment, a trapdoor-style drilling mud screen system, comprises a first body having a first portion, a second portion and a third portion, a first drilling mud inlet at a first end of the first portion of the first body, a first

drilling mud outlet at a second end of the third portion of the first body, a rotating trapdoor subassembly, wherein the rotating trapdoor subassembly is disposed within the second portion of the first body, wherein the first portion of the first body is fluidly connected to a first end of the rotating subassembly, and wherein a second end of the rotating subassembly is fluidly connected to the third portion of the first body, a pivot subassembly, wherein the pivot subassembly is disposed through the rotating trapdoor subassembly and through the second portion of the first body, and a drilling mud screen, wherein the drilling mud screen is disposed within the rotating trapdoor subassembly between the first drilling mud inlet and the first drilling mud outlet.

In an embodiment, the rotating trapdoor subassembly comprises a second body, wherein a first end of the second body is fluidly connected to a second end of the first portion of the first body and wherein a second end of the second body is fluidly connected to a first end of the third portion of the first body.

In an embodiment, the pivot subassembly comprises a pivot shaft, and a retaining ring, wherein the retaining ring retains the pivot shaft through the second portion of the first body.

In an embodiment, the first portion of the first body comprises a first piston.

In an embodiment, the drilling mud screen system further comprises a piston guide bar disposed through the first portion of the first body and into a portion of the first piston, wherein the piston guide bar guides a second end of the first piston to engage a first end of the rotating trapdoor subassembly when the rotating trapdoor subassembly is in a closed position.

In an embodiment, the drilling mud screen system further comprises a piston guide bar disposed through a first slot in the first portion of the first body or the second portion of the body, and into a second slot in the first piston, wherein the piston guide bar guides a second end of the first piston to engage a first end of the rotating trapdoor subassembly when the rotating trapdoor subassembly is in a closed position.

In an embodiment, the drilling mud screen system further comprises a piston guide bar disposed through the first portion of the first body of the second portion of the body, and into a portion of the first piston, wherein the piston guide bar locks a second end of the first piston to contact and seal a first end of the rotating trapdoor subassembly when the rotating trapdoor subassembly is in a closed position.

In an embodiment, the drilling mud screen system further comprises a piston guide bar disposed through a first slot in the first portion of the first body and into a second slot of the first piston, wherein the piston guide bar locks a second end of the first piston to contact and seal a first end of the rotating trapdoor subassembly when the rotating trapdoor subassembly is in a closed position.

In an embodiment, the drilling mud screen system further comprises a piston guide bar disposed through the first portion of the first body and into a portion of the first piston, wherein the piston guide bar guides a second end of the first piston to disengage from a first end of the rotating trapdoor subassembly when the rotating trapdoor subassembly is in an open position.

In an embodiment, the drilling mud screen system further comprises a piston guide bar disposed through the first portion of the first body and into a portion of the first piston, wherein the piston guide bar separates a second end of the first piston to disengage and create a gap from a first end of the rotating trapdoor subassembly when the rotating trapdoor subassembly is in the open position to avoid damage to a first seal face at the second end of the first piston and/or the second seal face at the first end of the rotating trapdoor subassembly

In an embodiment, the piston guide bar further comprises a ball bearing for smooth operation.

In an embodiment, the drilling mud screen system further comprises a first spring, wherein the first spring is disposed between the first piston and a first subassembly, wherein the first subassembly comprises a second body having a first end and a second end, a second drilling mud inlet at the first end of the second body, and a second drilling mud outlet at the second end of the second body, wherein the second end of the second body is fluidly connected to the first end of the first portion of the first body.

In an embodiment, the second end of the first piston has a first seal face and wherein the first end of the rotating trapdoor subassembly has a second seal face.

In an embodiment, the third portion of the first body comprises a second piston.

In an embodiment, the drilling mud screen system of further comprises a second spring, wherein the second spring is disposed between the second piston and a second subassembly, wherein the second subassembly comprises a third body having a first end and a second end, a third drilling mud inlet at the first end of the third body, a third drilling mud outlet at the second end of the third body, wherein the second end of the third portion of the first body is fluidly connected to the first end of the third body.

In an embodiment, the second end of the rotating trapdoor subassembly has a third seal face and wherein the first end of the second piston has a fourth seal face.

In an embodiment, the drilling mud screen system further comprises a threaded lock ring, wherein the threaded lock ring is disposed around the first portion of the first body and the first end of the trapdoor subassembly.

In an embodiment, the drilling mud screen system further comprises a threaded lock ring, wherein the threaded lock ring is disposed around a first portion of the body and a first end of the rotating trapdoor subassembly to lock the trapdoor subassembly in a closed position.

In an embodiment, the threaded lock ring further comprises a handle.

In an embodiment, the drilling mud screen comprises a third body having a first end and a second end and a first centerline, a filter having a first end, a second end, and openings, wherein the first end of the filter is fluidly connected to the first end of the second body via a first connection and/or an optional first end retaining ring, an end cap fluidly connected at the second end of the filter via a second connection, wherein the filter has an optional retaining ring disposed between the first connection and the second connection, a second drilling mud inlet at the first end of the second body, and a second drilling mud outlet at the openings of the filter.

In an embodiment, the filter comprises a plurality of rods having a first end and a second end, wherein each of the plurality of rods are spaced a distance apart to form the openings in the filter. In an embodiment, each of the plurality of rods are tapered from the first end to the second end.

In an embodiment, the filter comprises a formed sheet having drilled holes or slots spaced a distance apart to form the openings in the filter. In an embodiment, the drilled holes or slots are drilled in offset rows or straight rows from the first end to the second end.

In an embodiment, the filter is tapered from the first end to the second end.

In an embodiment, the end cap is a flat plate or a flat plate with holes or slots.

In an embodiment, the end cap is an inverted cone or an inverted cone with holes or slots. In an embodiment, the first centerline of the second body and an outer surface of the end cap forms a cap angle, wherein the cap angle is from about 30-degrees to about 90-degrees. In an embodiment, the first centerline of the second body and an outer surface of the end cap forms a cap angle, wherein the cap angle is from about 35-degrees to about 45-degrees.

In an embodiment, the filter, the first end retaining ring and/or the retaining ring are constructed from AISI 4145 or equivalent, stainless steel or combinations thereof.

In an embodiment, the filter, the first end retaining ring and/or the retaining ring has a hardened coating. In an embodiment, one or more of the filter, the first end retaining ring and/or the retaining ring has a Carbide coating with about 6% Cobalt binder.

In an embodiment, one or more of the first body, the second body and the third body are constructed from AISI 4130/75k or equivalent material, AISI 4145 or equivalent, or combinations thereof.

In an embodiment, the drilling mud screen comprises a third body having a first end and a second end and a first centerline, a filter having a first end and a second end, and openings, wherein the second end of the filter is fluidly connected to the first end of the second body via a first connection and/or an optional second end retaining ring, an end cap fluidly connected at the first end of the filter via a second connection, wherein the filter has an optional retaining ring disposed between the first connection and the second connection, a second drilling mud inlet at the openings of the filter, and a second drilling mud outlet at the second end of the second body.

In an embodiment, the filter comprises a plurality of rods having a first end and a second end, wherein each of the plurality of rods are spaced a distance apart to form the openings in the filter. In an embodiment, each of the plurality of rods are tapered from the first end to the second end.

In an embodiment, the filter comprises a formed sheet having drilled holes or slots spaced a distance apart to form the openings in the filter. In an embodiment, the drilled holes or slots are drilled in offset rows or straight rows from the first end to the second end.

In an embodiment, the filter is tapered from the second end to the first end.

In an embodiment, the end cap is a flat plate or a flat plate with holes or slots.

In an embodiment, the end cap is a cone or a cone with holes or slots. In an embodiment, the first centerline of the second body and an outer surface of the end cap forms a cap angle, wherein the cap angle is from about 30-degrees to about 90-degrees. In an embodiment, the first centerline of the second body and an outer surface of the end cap forms a cap angle, wherein the cap angle is from about 35-degrees to about 45-degrees.

In an embodiment, the filter, the first end retaining ring and/or the retaining ring are constructed from AISI 4145 or equivalent, stainless steel or combinations thereof.

In an embodiment, the filter, the first end retaining ring and/or the retaining ring has a hardened coating. In an embodiment, one or more of the filter, the first end retaining ring and/or the retaining ring has a Carbide coating with about 6% Cobalt binder.

In an embodiment, one or more of the first body, the second body and the third body are constructed from AISI 4130/75k or equivalent material, AISI 4145 or equivalent, or combinations thereof.

In an embodiment, a method of installing a drilling mud screen system comprises (a) stopping a drilling mud pump to fluidly connect the valve-style drilling mud screen system as disclosed herein to the drilling mud pump, (b) fluidly connecting the drilling mud screen system in line with and immediately upstream or downstream of the drilling mud pump, and (c) operating the drilling mud pump to produce flow of drilling mud through the drilling mud screen system.

In an embodiment, step b) comprises fluidly connecting a drilling mud inlet of the drilling mud screen system to a high-pressure outlet of the drilling mud pump and fluidly connecting a drilling mud outlet of the drilling mud screen system to a vibrator hose or a standpipe.

In an embodiment, step b) comprises fluidly connecting a drilling mud inlet of the drilling mud screen system to a high-pressure inlet of the drilling mud pump and fluidly connecting a drilling mud outlet of the drilling mud screen system to an inlet of a vibrator hose.

In an embodiment, step b) comprises fluidly connecting a drilling mud inlet of the drilling mud screen system to an outlet of a vibrator hose and a drilling mud outlet to an inlet of a standpipe.

In an embodiment, step b) comprises fluidly connecting a drilling mud inlet of the drilling mud screen system to an outlet of a first portion of a standpipe and a drilling mud outlet of the drilling mud screen system to an inlet of a second portion of the standpipe.

In an embodiment, the method further comprises step d) filtering or screening debris from drilling mud.

In an embodiment, a method of removing and replacing a drilling mud screen comprises (a) stopping a drilling mud pump connected to the valve-style drilling mud screen system as disclosed herein, (b) rotating a rotating subassembly to open the drilling mud screen system, (c) installing a replacement drilling mud screen, (d) rotating the rotating subassembly to close and seal the drilling mud screen system, and (e) operating the drilling mud pump to produce flow of drilling mud through the drilling mud screen system.

In an embodiment, a method of installing a drilling mud screen system comprises (a) stopping a drilling mud pump, (b) fluidly connecting a first transducer subassembly, having a first transducer, in line with and downstream of the drilling mud pump and fluidly connecting the valve-style drilling mud screen system as disclosed herein in line with and immediately downstream of the first transducer subassembly and (c) operating the drilling mud pump to produce flow of drilling mud through the first transducer subassembly and the drilling mud screen system.

In an embodiment, the method further comprises step (d) monitoring the first transducer of the first transducer subassembly for property information immediately upstream of the drilling mud screen system. In an embodiment, the method further comprises step (e) using the property information to determine a status of the drilling mud screen system.

In an embodiment, step (b) comprises (b-1) fluidly connecting the first transducer subassembly, having the first transducer, in line with and downstream of the drilling mud pump and fluidly connecting the valve-style drilling mud screen system as disclosed herein in line with and immediately downstream of the first transducer subassembly, (b-2) fluidly connecting a gate valve in line with and immediately downstream of the drilling mud screen system, and (b-3)

fluidly connecting a second transducer subassembly, having a low torque plug valve, in line with and immediately downstream of the gate valve.

In an embodiment, step (c) comprises operating the drilling mud pump to produce flow of drilling mud through the first transducer subassembly, the drilling mud screen system, the gate valve and the second transducer subassembly.

In an embodiment, the method further comprises step (d) stopping the drilling mud pump, step (e) closing the gate valve to isolate the drilling mud screen system, and step (f) pumping cement through the low torque plug valve of the second transducer subassembly, a vibrator hose, a stand pipe, a top drive and a case running tool (CRT).

In an embodiment, a method of installing a trapdoor-style drilling mud screen system comprises a) stopping a drilling mud pump to fluidly connect the drilling mud screen system as disclosed herein to the drilling mud pump, b) fluidly connecting the drilling mud screen system in line with and immediately upstream or downstream of the drilling mud pump; and c) operating the drilling mud pump to produce flow of drilling mud through the drilling mud screen system.

In an embodiment, step b) comprises fluidly connecting a drilling mud inlet of the drilling mud screen system to a high-pressure outlet of the drilling mud pump and fluidly connecting a drilling mud outlet of the drilling mud screen system to a vibrator hose or a standpipe.

In an embodiment, step b) comprises fluidly connecting a drilling mud inlet of the drilling mud screen system to a high-pressure inlet of the drilling mud pump and fluidly connecting a drilling mud outlet of the drilling mud screen system to an inlet of a vibrator hose.

In an embodiment, step b) comprises fluidly connecting a drilling mud inlet of the drilling mud screen system to an outlet of a vibrator hose and a drilling mud outlet to an inlet of a standpipe.

In an embodiment, step b) comprises fluidly connecting a drilling mud inlet of the drilling mud screen system to an outlet of a first portion of a standpipe and a drilling mud outlet of the drilling mud screen system to an inlet of a second portion of the standpipe.

In an embodiment, the method further comprises step d) filtering or screening debris from drilling mud.

In an embodiment, a method of removing and replacing a drilling mud screen comprises a) stopping a drilling mud pump connected to the drilling mud screen system as disclosed herein, b) rotating a rotating trapdoor subassembly to open the drilling mud screen system, c) installing a replacement drilling mud screen, d) rotating the rotating trapdoor subassembly to close and seal the drilling mud screen system; and e) operating the drilling mud pump to produce flow of drilling mud through the drilling mud screen system.

In an embodiment, step b) comprises step b-1) removing a piston guide bar and/or a threaded lock ring and step b-2) rotating the rotating trapdoor subassembly to open the drilling mud screen system.

In an embodiment, step d) comprises step d-1) rotating the trapdoor subassembly to close the drilling mud screen system and step d-2) installing a piston guide bar and/or a threaded lock ring to seal the drilling mud screen system.

In an embodiment, step b) comprises step b-1) removing a piston guide bar and/or a threaded lock ring and step b-2) rotating the rotating trapdoor subassembly to open the drilling mud screen system, and step d) comprises step d-1) rotating the trapdoor subassembly to close the drilling mud screen system and step d-2) installing a piston guide bar and/or a threaded lock ring to seal the drilling mud screen system.

These and other objects, features and advantages will become apparent as reference is made to the following detailed description, preferred embodiments, and examples, given for the purpose of disclosure, and taken in conjunction with the accompanying drawings and appended claims.

BRIEF DESCRIPTION OF THE DRAWINGS

For a further understanding of the nature and objects of the present invention, reference should be made to the following detailed disclosure, taken in conjunction with the accompanying drawings, in which like parts are given like reference numerals, and wherein:

FIG. **1** illustrates a photograph of an exemplary drilling mud screen system according to an embodiment of the present invention, showing the system installed at an outlet of a drilling mud pump upstream of a drilling rig standpipe assembly;

FIG. **2** illustrates a photograph of a single-piece body for the exemplary drilling mud screen system of FIG. **1**, showing an unassembled view of a drilling mud inlet, a drilling mud outlet and a drilling mud screen access port;

FIG. **3**A illustrates a photograph of a single-piece body for the exemplary drilling mud screen system of FIG. **2**, showing a detailed view of a drilling mud inlet and a drilling mud screen access port;

FIG. **3**B illustrates a photograph of a single-piece body for the exemplary drilling mud screen system of FIG. **3**A, showing a detailed view of the drilling mud screen access port;

FIG. **3**C illustrates a photograph of the single-piece body for the exemplary drilling mud screen system of FIG. **3**A, showing an end cap installed in the drilling mud screen access port;

FIG. **3**D illustrates a photograph of a single-piece body for the exemplary drilling mud screen system of FIGS. **3**A-**3**C, showing a detailed view of the drilling mud inlet;

FIG. **3**E illustrates a photograph of a single piece body of the exemplary drilling mud screen system of FIGS. **3**A-**3**C, showing a detailed view of the drilling mud outlet;

FIG. **4**A illustrates an upper, cross-sectional view of an exemplary drilling mud screen system according to an embodiment of the present invention, showing a drilling mud screen;

FIG. **4**B illustrates a detailed view of A-A of FIG. **4**A, showing an end cap installed;

FIG. **4**C illustrates a detailed view of A-A of FIGS. **4**A-**4**B, showing the end cap removed;

FIG. **5**A illustrates an upper, cross-sectional view of a drilling mud screen according to an embodiment of the present invention, showing a filter and an end cap;

FIG. **5**B illustrates a detailed view of A-A of FIG. **5**A, showing an inlet of a second portion of a body and an outlet of the first portion of the body;

FIG. **5**C illustrates a detailed view of B of FIG. **5**A, showing a detailed view of a groove for an O-ring;

FIG. **5**D illustrates a detailed view of C of FIG. **5**A, showing an enlarged detailed view of the groove for an O-ring;

FIG. **5**E illustrates an upper, right perspective view of the drilling mud screen of FIG. **5**A;

FIG. **6**A illustrates a photograph of a mud screen system according to an embodiment of the present invention, showing a two-piece body for the system;

FIG. **6**B illustrates a photograph of the exemplary drilling mud screen system of FIG. **6**A, showing a drilling mud outlet;

FIG. **6**C illustrates a photograph of the exemplary drilling mud screen system of FIGS. **6**A-**6**B;

FIG. **6**D illustrates a photograph of the exemplary drilling mud screen system of FIGS. **6**A-**6**C, showing a drilling mud inlet and a drilling mud screen access port;

FIG. **7**A illustrates an upper, cross-sectional view of a drilling mud screen system according to an embodiment of the present invention, showing a single-inlet drilling mud system;

FIG. **7**B illustrates an upper, cross-sectional view of a drilling mud screen system according to an embodiment of the present invention, showing a double-inlet drilling mud system;

FIG. **8**A illustrates an upper cross-sectional view of an exemplary drilling mud screen puller/installer tool for the exemplary drilling mud screen system of FIGS. **4**A-**4**C;

FIG. **8**B illustrates a detailed view of A-A of FIG. **8**A, showing a means to engage a drilling mud screen according to an embodiment of the present invention;

FIG. **9**A illustrates a upper cross-sectional view of an exemplary drilling mud screen puller/installer tool for the exemplary drilling mud screen system of FIG. **7**A;

FIG. **9**B illustrates a detailed view of A-A of FIG. **9**A, showing a means to engage a drilling mud screen according to an embodiment of the present invention;

FIG. **10** illustrates a flow diagram for a method of using a drilling mud screen system;

FIG. **11** illustrates a flow diagram for a method of using a drilling mud screen puller/installer;

FIG. **12**A illustrates a cross-sectional view of the exemplary drilling mud tool of FIG. **8**A pulling the drilling mud screen of FIG. **5** from the exemplary drilling mud screen system of FIG. **4**;

FIG. **12**B illustrates a cross-sectional view of the exemplary drilling mud tool of FIG. **8**A installing the drilling mud screen of FIG. **5** into the exemplary drilling mud screen system of FIG. **4**;

FIG. **13**A illustrates a cross-sectional view of the exemplary drilling mud tool of FIG. **9**A pulling the drilling mud screen of FIG. **5** from the exemplary drilling mud screen system of FIG. **7**A;

FIG. **13**B illustrates a cross-sectional view of the exemplary drilling mud tool of FIG. **9**A installing the drilling mud screen of FIG. **5** into the exemplary drilling mud screen system of FIG. **7**A;

FIG. **14** illustrates a cross-sectional view of the exemplary drilling mud screen of FIG. **4**, showing an optional plug installed in the drilling mud screen system;

FIG. **15**A illustrates an upper, right perspective view of an optional plug with a backward "J" shaped flow surface according to an embodiment of the present invention;

FIG. **15**B illustrates a cross-sectional view of the optional plug with the backward "J" shaped flow surface of FIG. **15**A;

FIG. **16**A illustrates an upper, right perspective view of an optional plug with a curved shaped flow surface according to an embodiment of the present invention;

FIG. **16**B illustrates a cross-sectional view of the optional plug with the curved shaped flow surface of FIG. **16**A;

FIG. **17**A illustrates an upper, right side perspective view of an optional plug with an "L" shaped flow surface according to an embodiment of the present invention;

FIG. **17**B illustrates a cross-sectional view of an optional plug with an "L" shaped flow surface of FIG. **17**A;

FIG. **18**A illustrates an upper cross-sectional view of the exemplary drilling mud tool of FIG. **8**A for the exemplary drilling mud system of FIGS. **4**A-**4**C and **14**;

FIG. **18**B illustrates another upper cross-sectional view of the exemplary drilling mud tool of FIG. **8**A for the exemplary drilling mud system of FIGS. **4**A-**4**C and **14**;

FIG. **19** illustrates a cross-sectional view of the drilling mud screen system in a monitoring configuration according to an embodiment of the present invention, showing an optional transducer subassembly;

FIG. **20**A illustrates an upper, right side perspective view of an optional transducer subassembly according to an embodiment of the present invention;

FIG. **20**B illustrates a side perspective view of the optional transducer subassembly of FIG. **20**A;

FIG. **21**A illustrates an upper view of a mud screen system according to an embodiment of the present invention, showing an optional two-piece body for the system;

FIG. **21**B illustrates a detailed, cross-sectional view of A-A of FIG. **21**A, showing an entry angle of about 30 degrees;

FIG. **22**A illustrates an end view of an optional drilling mud screen according to an embodiment of the present invention;

FIG. **22**B illustrates a detailed, cross-sectional view of A-A of FIG. **22**A, showing an optional drilling mud screen insert, and optional first end retaining ring, an optional filter length, and an optional filter retaining ring;

FIG. **22**C illustrates a detailed view of B of FIG. **22**B;

FIG. **22**D illustrates a detailed, cross-sectional view of C-C of FIG. **22**C;

FIG. **22**E illustrates an upper, right perspective view of the drilling mud screen of FIGS. **22**A-**22**B;

FIG. **23** illustrates a cross-sectional view of a mud screen system according to an embodiment of the present invention, showing an optional drilling mud screen insert inserted into a drilling mud screen;

FIG. **24**A illustrates an end view of an optional drilling mud screen insert according to an embodiment of the present invention;

FIG. **24**B illustrates a detailed, cross-sectional view of A-A of FIG. **24**A, showing an inlet of the drilling mud screen insert and an outlet of the drilling mud screen insert;

FIG. **24**C illustrates an upper, right perspective view of the optional drilling mud screen insert of FIGS. **24**A-**24**B;

FIG. **25** illustrates a detailed, cross-sectional view of the optional drilling mud screen, showing an optional first end retaining ring;

FIG. **26**A illustrates a side view of an optional drilling mud screen according to an embodiment of the present invention, showing an optional filter length, and an optional filter retaining ring;

FIG. **26**B illustrates a detailed, cross-sectional view of the optional drilling mud screen of FIG. **26**A, showing an optional drilling mud screen insert, an optional filter length, and an optional filter retaining ring;

FIG. **27**A illustrates an end view of an optional filter retaining ring according to an embodiment of the present invention;

FIG. **27**B illustrates a detailed, cross-sectional view of A-A of FIG. **27**A;

FIG. **27**C illustrates a detailed, cross-sectional view of B of FIG. **27**B;

FIG. **28** illustrates a cross-sectional view of a drilling mud screen system in a cementing configuration according to an embodiment of the present invention, showing an optional first transducer subassembly having an optional transducer,

a drilling mud screen system, an optional gate valve and an optional second transducer subassembly having an optional low torque plug valve;

FIG. **29** illustrates a cross-sectional view of the exemplary drilling mud tool of FIG. **9**A inserting the drilling mud screen of FIG. **5** or **22** into the exemplary drilling mud screen system of FIG. **7**A or **21**B, showing an optional stop plate.

FIG. **30**A illustrates an upper, left perspective view of an exemplary drilling mud screen system with a camming seal separator having a face-roller cam mechanism according to an embodiment of the present invention, showing a rotating subassembly in a closed position;

FIG. **30**B illustrates the upper, left perspective view of the drilling mud screen system of FIG. **30**A, showing an optional first transducer subassembly and an optional second transducer subassembly;

FIG. **30**C illustrates an upper, left perspective view of the drilling mud screen system of FIG. **30**A, showing a rotating subassembly in the open position;

FIG. **30**D illustrates a detail view of a rotating subassembly of FIGS. **30**A-**30**C;

FIG. **30**E illustrates a cross-sectional view of the drilling mud screen system of FIG. **30**A, showing the rotating subassembly in a closed position;

FIG. **31**A illustrates left perspective view of an exemplary drilling mud screen system with a camming seal separator having a face-roller cam mechanism according to an embodiment of the present invention, showing a rotating subassembly in a closed position;

FIG. **31**B illustrates the left perspective view of the drilling mud screen system of FIG. **31**A, showing an optional first transducer subassembly and an optional second transducer subassembly;

FIG. **31**C illustrates a left perspective view of the drilling mud screen system of FIG. **30**A, showing a rotating subassembly in the open position;

FIG. **31**D illustrates a partial cross-sectional view of the drilling mud screen system of FIG. **31**A, showing the rotating subassembly in the closed position;

FIG. **31**E illustrates a partial cross-sectional view of the drilling mud screen system of FIGS. **31**A and **31**C-**31**D, showing the rotating subassembly in the open position;

FIG. **32**A illustrates an upper, left perspective view of an exemplary drilling mud screen system with a camming seal separator having a push-rod cam mechanism according to an embodiment of the present invention, showing a rotating subassembly in a closed position;

FIG. **32**B illustrates the upper, left perspective view of the drilling mud screen system of FIG. **32**A, showing the rotating subassembly in an open position;

FIG. **32**C illustrates a cross-sectional view of the drilling mud screen system of FIG. **32**A, showing the rotating subassembly in a closed position;

FIG. **33**A illustrates a left perspective view of an exemplary drilling mud screen system with a camming seal separator having a push-rod cam mechanism according to an embodiment of the present invention, showing a rotating subassembly in a closed position;

FIG. **33**B illustrates a left perspective view of the drilling mud screen system of FIG. **33**A, showing the rotating subassembly in an open position;

FIG. **33**C illustrates a detail view of the push-rod cam mechanism of FIG. **33**A, showing the rotating subassembly in a closed position;

FIG. **33**D illustrates a detail view of the push-rod cam mechanism of FIGS. **33**A and **33**C, showing the rotating subassembly in the open position;

FIG. **33**E illustrates a partial cross-sectional view of the drilling mud screen system of FIG. **33**A, showing the rotating subassembly in the closed position;

FIG. **33**F illustrates a detail view of the push-rod cam mechanism of FIG. **33**A, showing the rotating subassembly in the closed position;

FIG. **34** illustrates a flow chart for a method of using a drilling mud screen system;

FIG. **35**A illustrates a flow chart for a method of using a drilling mud screen system;

FIG. **35**B illustrates a flow chart of optional steps for the method in FIG. **35**A;

FIG. **36** illustrates a flow chart for a method of removing and replacing a drilling mud screen;

FIG. **37**A illustrates an end view of an exemplary trapdoor-style drilling mud screen system according to an embodiment of the present invention;

FIG. **37**B illustrates a detailed, cross-sectional view A-A of FIG. **37**A;

FIG. **37**C illustrates a detailed, cross-sectional view B-B of FIG. **37**A;

FIG. **37**D illustrates a detailed view C of FIG. **37**C;

FIG. **37**E illustrates an end view of the exemplary trapdoor-style drilling mud screen system of FIGS. **37**A-**37**D;

FIG. **37**F illustrates a detailed, cross-sectional view G-G of FIG. **37**E;

FIG. **37**G illustrates an end view of the exemplary trapdoor-style drilling mud screen system of FIGS. **37**A-**37**F;

FIG. **37**H illustrates a detailed, cross-sectional view J-J of FIG. **37**G;

FIG. **37**I illustrates an end view of the exemplary trapdoor-style drilling mud screen system of FIGS. **37**A-**37**H;

FIG. **37**J illustrates a detailed cross-sectional view H-H of FIG. **37**I;

FIG. **37**K illustrates an upper, right perspective view of the exemplary trapdoor-style drilling mud screen system of FIGS. **37**A-**37**J, showing the trapdoor-style drilling mud screen system in a closed position;

FIG. **37**L illustrates an upper, right perspective view of the exemplary trapdoor-style drilling mud screen system of FIGS. **37**A-**37**K, showing the trapdoor-style drilling mud screen system in an open position;

FIG. **37**M illustrates an exploded view of the exemplary trapdoor-style drilling mud screen system of FIGS. **37**A-**37**L

FIG. **38**A illustrates a cross-sectional view of an exemplary trapdoor-style drilling mud screen system having a reversed drilling mud screen, showing the trapdoor-style drilling mud screen system in a closed position;

FIG. **38**B illustrates a cross-sectional view of the exemplary trapdoor-style drilling mud screen system of FIG. **38**A, showing the trapdoor-style drilling mud screen system in an open position and

FIG. **39** illustrates a flow diagram for a method of installing and removing a drilling mud screen for the exemplary trapdoor-style drilling mud screen system of FIGS. **39**A-**39**M and **38**A-**38**B.

DETAILED DESCRIPTION OF EMBODIMENTS OF THE INVENTION

The following detailed description of various embodiments of the present invention references the accompanying drawings, which illustrate specific embodiments in which the invention can be practiced. While the illustrative

embodiments of the invention have been described with particularity, it will be understood that various other modifications will be apparent to and can be readily made by those skilled in the art without departing from the spirit and scope of the invention. Accordingly, it is not intended that the scope of the claims appended hereto be limited to the examples and descriptions set forth herein but rather that the claims be construed as encompassing all the features of patentable novelty which reside in the present invention, including all features which would be treated as equivalents thereof by those skilled in the art to which the invention pertains. Therefore, the scope of the present invention is defined only by the appended claims, along with the full scope of equivalents to which such claims are entitled.

Exemplary Drilling Mud Screen System

FIG. **1** illustrates a photograph of an exemplary drilling mud screen system according to an embodiment of the present invention, showing the system installed at an outlet of a drilling mud pump upstream of a drilling rig standpipe assembly. As shown in FIG. **1**, the drilling mud screen system **100** has a body **105** having a first end **110** and a second end **115**, a drilling mud inlet **120** and a drilling mud outlet **125**, and a drilling mud screen access port **130**. In an embodiment, the drilling mud screen access port **130** may be closed with an end cap **135**.

In an embodiment, a drilling mud inlet **120** of the drilling mud screen system **100** may be fluidly connected to a high-pressure outlet of a drilling mud pump via a connection. In an embodiment, a drilling mud outlet **125** of the drilling mud screen system **100** may be fluidly connected to an inlet of a vibrator hose to a standpipe via a connection.

Alternatively, the drilling mud screen system **100** may be installed between an outlet of the vibrator hose and an inlet of the standpipe, or at any point in the standpipe via a connection.

In an embodiment, the drilling mud inlet **120** may be fluidly connected to, for example, an outlet to a drilling mud pump via a connection; and the drilling mud outlet **125** may be fluidly connected to, for example, an inlet to a vibrator hose via a connection. Any suitable connection may be used for the drilling mud inlet and the drilling mud outlet. For example, suitable connections include, but are not limited to, pipe fittings and welds. Connections are well known in the art. In an embodiment, the drilling mud inlet **120** may be fluidly connected to, for example, an outlet to a drilling mud pump via a weld; and the drilling mud outlet **125** may be fluidly connected to, for example, an inlet to a vibrator hose via a weld.

Single-Piece Body

FIG. **2** illustrates a photograph of a single-piece body for the exemplary drilling mud screen system of FIG. **1**, showing an unassembled view of a drilling mud inlet **220**, a drilling mud outlet **225**, and a drilling mud screen access port **230**. As shown in FIG. **2**, the drilling mud screen system **200** has a body **205** having a first end **210** and a second end **215**, an inlet **220** and an outlet **225**, and a mud screen access port **230**.

In an embodiment, the drilling mud inlet **220** may be fluidly connected to, for example, an outlet of a drilling mud pump via a connection; and the drilling mud outlet **225** may be fluidly connected to, for example, an inlet of a vibrator hose via a connection. Any suitable connection may be used for the drilling mud inlet **220** and the drilling mud outlet **225**. For example, suitable connections include, but are not limited to, pipe fittings and welds. Connections are well known in the art. In an embodiment, the drilling mud inlet **220** may be fluidly connected to, for example, an outlet of a drilling mud pump via a weld; and the drilling mud outlet **225** may be fluidly connected to, for example, an inlet of a vibrator hose via a weld.

FIG. **3**A illustrates a photograph of a single-piece body for the exemplary drilling mud screen system of FIG. **2**, showing a detailed view of a drilling mud inlet **320** and a drilling mud screen access port **330**. As shown in FIG. **3**A, the drilling mud screen system **300** has a body **305** having a first end **310**, an inlet **320**, a drilling mud screen access port **330**, and an end cap **335**.

FIG. **3**B illustrates a photograph of the single-piece body of FIG. **3**A, showing a detailed view of the drilling mud screen access port **330**. As shown in FIG. **3**B, the drilling mud screen system **300** has a body **305** having a first end **310**, an inlet **320**, and a drilling mud screen access port **330**.

FIG. **3**C illustrates a photograph of the single-piece body of FIG. **3**A, showing an end cap **335** installed in a drilling mud screen access port **330**. As shown in FIG. **3**C, the drilling mud screen access port **330** of the drilling mud screen system **300** may be closed with an end cap **335** via a fitting. Any suitable fitting may be used. For example, suitable fittings include, but are not limited to, pipe fittings. Fittings are well known in the art.

In an embodiment, the drilling mud screen access port **330** of the drilling mud screen system **300** may be sealed with an end cap **335** via an O-ring. Any suitable O-ring may be used. For example, suitable O-rings include, but are not limited to, 300 Series O-rings. O-rings are well known in the art.

In an embodiment, the end cap **335** of the drilling mud screen system **300** may comprise a cap, an O-ring and a pipe collar. In an embodiment, the end cap **335** may be a five-inch 1002 WECO cap with an O-ring.

FIG. **3**D illustrates a photograph of a single-piece body of the exemplary drilling mud screen system of FIGS. **3**A-**3**C, showing a detailed view of the drilling mud inlet **320**; and FIG. **3**E illustrates a photograph of a single-piece body of the exemplary drilling mud screen system of FIGS. **3**A-**3**C, showing a detailed view of the drilling mud outlet **325**.

In an embodiment, the drilling mud inlet **320** may be fluidly connected to, for example, an outlet of a drilling mud pump via a connection; and the drilling mud outlet **325** may be fluidly connected to an inlet of a vibrator hose via a connection. Any suitable connection may be used for the drilling mud inlet **320** and the drilling mud outlet **325**. For example, suitable connections include, but are not limited to, pipe fittings and welds. Connections are well known in the art. In an embodiment, the drilling mud inlet **320** may be fluidly connected to, for example, an outlet of a drilling mud pump via a weld; and the drilling mud outlet **325** may be fluidly connected to an inlet of a vibrator hose via a weld.

FIG. **4**A illustrates an upper, cross-sectional view of an exemplary drilling mud screen system according to an embodiment of the present invention, showing a drilling mud screen. As shown in FIG. **4**A, the drilling mud screen system **400** has a body **405** having a first end **410** and a second end **415**, a drilling mud inlet **420** and a drilling mud outlet **425**, a drilling mud screen access port **430**, an end cap **435** and a drilling mud screen **440**.

Any suitable connection may be used for the drilling mud inlet **420** and the drilling mud outlet **425**. For example, suitable connections include, but are not limited to, pipe fittings and welds. Connections are well known in the art.

In an embodiment, the body **405** of the drilling mud screen system **400** may be constructed of any suitable material. For example, suitable materials include, but are not limited to, any alloy steel suitable for a drilling mud application. In an embodiment, the body **405** may be constructed

of an American Iron and Steel Industry (AISI) **4130/75*k*** yield or equivalent material. See e.g., FIG. **2**. In an embodiment, the inner surface of the body **405** may be unpainted. See e.g., FIGS. **1** & **3**A-**3**E. In an embodiment, the outer surface of the body **405** may be painted. Id.

In an embodiment, the body **405** has a first centerline **445** and a length **450**. In an embodiment, the first centerline **445** extends through the center of the drilling mud screen access port **430** to the drilling mud outlet **425**. The length **450** of the body **405** may be any suitable length. In an embodiment, the length **450** of the body **405** may be from about 30-inches to about 50-inches, and any range or value there between. In an embodiment, the length **450** may be about 40-inches.

In an embodiment, the body **405** has a second centerline **455**. In an embodiment, the second centerline **455** extends through the center of the drilling mud inlet **420** to the first centerline **445**.

In an embodiment, the first centerline **445** and the second centerline **455** form a first angle **460**. In an embodiment, the first angle **460** may be from about 30-degrees to about 120-degrees, and any range or value there between. In an embodiment, the first angle **460** may be about 45-degrees. In an embodiment, the first angle **460** may be about 90-degrees.

In an embodiment, the first drilling mud inlet **420** may be offset from a first end **410** of the body **405**. The first drilling mud inlet **420** may be offset from a first end **410** of the body **405** at any suitable distance. In an embodiment, the second centerline **455** may be offset from the first end **410** of the body **405** from about 9-inches to about 13-inches, and any range or value there between. In an embodiment, the second centerline **455** may be offset from the first end **410** of the body **405** about 11-inches.

In an embodiment, the drilling mud inlet **420** may have any suitable inner diameter **465**; and the drilling mud inlet **420** may have any suitable outer diameter **470**. In an embodiment, the inner diameter **465** of the drilling mud inlet **420** may be from about 3-inches to about 5-inches, and any range or value there between. In an embodiment, the inner diameter **465** of the drilling mud inlet **420** may be about 4-inches.

In an embodiment, the outer diameter **470** of the drilling mud inlet **420** may be from about 4.5-inches to about 6.5-inches, and any range or value there between. In an embodiment, the outer diameter **470** of the drilling mud inlet **420** may be about 5.5-inches.

In an embodiment, the body **405** has a first portion **475** and a second portion **480**. In an embodiment, the first portion **475** of the body **405** may have a first inner diameter **485** and an outer diameter **495**; and the second portion **480** of the body **405** may have a second inner diameter **490** and an outer diameter **495**.

In an embodiment, the first inner diameter **485** of the body **405** may be from about 3-inches to about 5-inches, and any range or value there between. In an embodiment, the first inner diameter **485** of the body **405** may be about 4-inches.

In an embodiment, the second inner diameter **490** of the body **405** may be from about 3-inches to about 5-inches, and any range or value there between. In an embodiment, the second inner diameter **490** of the body **405** may be about 4-inches.

In an embodiment, a second portion **480** of the body **405** may have a second inner diameter **490** to provide a high flow rate of drilling mud through the drilling mud screen **440**. In an embodiment, the second inner diameter **490** of the body **405** may be from about 3.5-inches to about 5.5-inches, and any range or value there between. In an embodiment, the second inner diameter **490** of the body **405** may be from about 4.5-inches to about 5.5-inches, and any range or value there between.

In an embodiment, the outer diameter **495** of the first portion **475** and/or the second portion **480** of the body **405** may be from about 5.5-inches to about 7.5-inches, and any range or value there between. In an embodiment, the outer diameter **495** of the first portion **475** and/or the second portion **480** of the body **405** may be about 6.5-inches.

In an embodiment, the drilling mud outlet **425** may have any suitable inner diameter **465**; and the drilling mud outlet **425** may have any suitable outer diameter **470**. In an embodiment, the inner diameter **465** of the drilling mud outlet **425** may be from about 3-inches to about 5-inches, and any range or value there between. In an embodiment, the inner diameter **465** of the drilling mud outlet **425** may be about 4-inches.

In an embodiment, the outer diameter **470** of the drilling mud outlet **425** may be from about 4.5-inches to about 6.5-inches, and any range or value there between. In an embodiment, the outer diameter **470** of the drilling mud outlet **425** may be about 5.5-inches.

FIG. **4**B illustrates a detailed view of A-A of FIG. **4**A, showing an end cap **435** installed; and FIG. **4**C illustrates a detailed view of A-A of FIGS. **4**A-**4**B, showing the end cap **435** removed.

Drilling Mud Screen

The drilling mud screen **500** may be any suitable filter or screen capable of filtering or screening debris from drilling muds. For example, suitable drilling mud screens include, but are not limited to, drill screens and rod screens.

FIG. **5**A illustrates an upper, cross-sectional view of a drilling mud screen **500** according to an embodiment of the present invention, showing a filter **530** and an end cap **535**. As shown in FIG. **5**A, the drilling mud screen **500** has a body **505** having a first end **510** and a second end **515**, a drilling mud inlet **520**, a drilling mud outlet **525**, a filter **530** and an end cap **535**.

In an embodiment, the drilling mud inlet **520** may be fluidly connected to, for example, an outlet of a drilling mud pump via a connection; and the drilling mud outlet **525** may be fluidly connected to an inlet of a vibrator hose via a connection. Any suitable connection may be used for the drilling mud inlet **520** and the drilling mud outlet **525**. For example, suitable connections include, but are not limited to, pipe fittings and welds. Connections are well known in the art. In an embodiment, the drilling mud inlet **520** may be fluidly connected to, for example, an outlet of a drilling mud pump via a weld; and the drilling mud outlet **525** may be fluidly connected to an inlet of a vibrator hose via a weld.

In an embodiment, the body **505** of the drilling mud screen **500** may be constructed of any suitable material. For example, suitable materials include, but are not limited to, any alloy steel or tool steel. In an embodiment, the body **505** may be constructed of an AISI 4145 or equivalent material. See e.g., FIGS. **5**A-**5**E. In an embodiment, the body **505** may be constructed of tool steel or equivalent material.

In an embodiment, the body **505** of the drilling mud screen **500** may have a hardened coating to reduce washing (i.e., erosion) of the screen **500**. For example, suitable hardened coatings include, but are not limited to, any Carbide coating or equivalent. In an embodiment, the body **505** may have a Carbide coating with about 6% Cobalt binder or equivalent material.

In an embodiment, the body **505** of the drilling mud screen **500** has a centerline **545** and a length **550**. In an embodiment, the centerline **545** extends through the center

of the drilling mud screen inlet **520** to the end cap **535**. The length **550** of the body **505** may be any suitable length. In an embodiment, the length **550** of the body **505** may be from about 20-inches to about 30-inches, and any range or value there between. In an embodiment, the length **550** may be about 25-inches.

In an embodiment, the drilling mud inlet **520** of the drilling mud screen **500** may have any suitable inner diameter **565**; and the drilling mud inlet **520** may have any suitable outer diameter **570**. In an embodiment, the inner diameter **565** of the drilling mud inlet **520** may be from about 3-inches to about 5-inches, and any range or value there between. In an embodiment, the inner diameter **565** of the drilling mud inlet **520** may be about 3.9-inches.

In an embodiment, the outer diameter **570** of the drilling mud inlet **520** may be from about 4-inches to about 6-inches, and any range or value there between. In an embodiment, the outer diameter **570** of the drilling mud inlet **520** may be about 4-inches.

In an embodiment, the body **505** of the drilling mud screen **500** has a first portion **575** and a second portion **580**. In an embodiment, the first portion **575** of the body **505** has a first length; and the second portion **580** of the body **505** has a second length. The first portion **575** and the second portion **580** may be any suitable length. In an embodiment, the first portion **575** may have a first length from about 6-inches to about 10-inches; and the second portion **580** may have a second length from about 14-inches to about 20-inches, and any range or value there between. In an embodiment, the first portion **575** may have a first length of about 7.5-inches; and the second portion **580** may have a second length of about 17.5-inches.

In an embodiment, a second portion **580** of the body **505** of the drilling mud screen **500** may have a filter **530**. In an embodiment, the filter **530** may comprise a plurality of rods spaced a distance apart to form a filter. In an embodiment, the distance may be less than a particle size (e.g., diameter) desired to be filtered from the drilling mud. Particle filtration is well known in the art.

In an embodiment, the filter **530** may comprise a formed sheet having drilled holes spaced a distance apart to form a filter. In an embodiment, the size of the holes (e.g., diameter) may be less than a particle size (e.g., diameter) desired to be filtered. Particle filtration is well known in the art.

In an embodiment, a second portion **580** of the body **505** of the drilling mud screen **500** may have a drilling mud outlet **525**. In an embodiment, the drilling mud outlet **525** may comprise a plurality of spaces (i.e., flow passages) between a plurality of rods. In an embodiment, the drilling mud outlet **525** may comprise a plurality of holes (i.e., flow passages) drilled in a formed sheet.

In an embodiment, a first end **510** of a first portion **575** of the body **505** of the drilling mud screen **500** may have a first inner diameter **585**; and a second end **515** of a second portion **580** of the body **505** may have a second inner diameter **590**.

In an embodiment, the first end **510** of the first portion **575** may be shaped to accept a puller/installer plate **975** of a drilling mud screen puller/installer tool **800**, **900**, as discussed below. See e.g., FIGS. **5**A, **8**A & **9**A.

In an embodiment, the body **505** and/or a filter **530** of the drilling mud screen **500** may have a tapered drilling mud flow path from a larger inner diameter (ID) to a smaller ID to reduce washing (i.e., erosion) of the screen **500**.

In an embodiment, the first inner diameter **585** of the first end **510** of the body **505** of the drilling mud screen **500** may be from about 3-inches to about 5-inches, and any range or value there between. In an embodiment, the first inner diameter **585** of the first end **510** of the body **505** may be about 3.9-inches.

FIG. **5**B illustrates a detailed view of A-A of FIG. **5**A, showing an outlet of a first portion **575** of the body **505** and an inlet of the second portion **580** of the body **505**. In an embodiment, an inner diameter of an outlet of the first portion **575** and an inlet of the second portion **590** of the body **505** may be from about 2-inches to about 3-inches, and any range or value there between. In an embodiment, the inner diameter of the outlet of the first portion **575** of the body **505** and the inlet of the second portion **590** of the body **505** may be about 2.5-inches.

In an embodiment, the outlet of the first portion **575** and/or the inlet of the second portion **590** of the body **505** may be shaped to accept a rounded end **875**, **975** of a drilling mud screen puller/installer tool **800**, **900**. See e.g., FIGS. **5**B, **8**B & **9**B. See also FIGS. **12**B & **13**B. In an embodiment, the inlet of the second portion **590** of the body **505** may have an inner shoulder to provide a pushing surface for the rounded end **875**, **975** of the drilling mud screen puller/installer tool **800**, **900**. Id.

In an embodiment, the outlet of the first portion **575** and/or the inlet of the second portion **580** of the body **505** may have a means to engage **540** a drilling mud screen puller/installer tool **800**, **900**, as discussed below. See e.g., FIGS. **5**A, **8**A & **9**A. The means to engage **540** may be any suitable means to accept, and provide a pulling surface for, the drilling mud screen puller/installer tool **800**, **900**. For example, a suitable means to engage **540** includes, but is not limited to, a "key" opening to rotationally engage an inner shoulder. In an embodiment, the outlet of the first portion **575** and/or the inlet of the second portion **590** of the body **505** may be shaped to accept a puller/installer plate **870**, **970** of a drilling mud screen puller/installer tool **800**, **900**. See e.g., FIGS. **5**B, **8**B & **9**B. See also FIGS. **12**A, **13**A & **29**. In an embodiment, the inlet of the second portion **590** of the body **505** may have an inner shoulder to provide a pulling surface for the puller/installer plate **870**, **970** of the drilling mud screen puller/installer tool **800**, **900**. Id.

In an embodiment, the second inner diameter **590** of the second end **515** of the body **505** of the drilling mud screen **500** may be from about 2-inches to about 3-inches, and any range or value there between. In an embodiment, the second inner diameter **590** of the second end **515** of the body **505** may be about 2.3-inches.

In an embodiment, the outer surface **595** of the first portion **575** of the body **505** of the drilling mud screen **500** may be adapted to engage one or more shoulders in an inner surface of the body **505**. In an embodiment, a first shoulder and a second shoulder of the body **505** may be offset from a first end **510** of the body **505**. Cf. FIGS. **4**A & **5**A. The first and second shoulders may be offset from the first end **510** of the body **505** at any suitable distance. In an embodiment, the first shoulder may be offset from the first end **510** of the body **505** from about 4-inches to about 8-inches; and the second shoulder may be offset from the first end **510** of the body **505** from about 5-inches to about 9-inches, and any range or value there between. In an embodiment, the first shoulder may be offset from the first end **510** of the body **505** about 4.8-inches; and the second shoulder may be offset from the first end **510** of the body **505** about 6.8-inches.

In an embodiment, the outer surface **595** of the body **505** of the drilling mud screen **500** may be sealed against an inner surface of the body **505** via an O-ring. Cf. FIGS. **4**A & **5**A. Any suitable O-ring may be used. For example,

suitable O-rings include, but are not limited to, 300 Series O-rings. O-rings are well known in the art.

FIG. **5**C illustrates a detailed view of B of FIG. **5**A; and FIG. **5**D illustrates a detailed view of C of FIG. **5**A, both showing detailed views of a groove for an O-ring. In an embodiment, a groove for an O-ring may be offset from a first end **510** of the body **505** of the drilling mud screen **500**. The groove for the O-ring may be offset from the first end **510** of the body **505** at any suitable distance. In an embodiment, the groove for the O-ring may be offset from the first end **510** of the body **505** from about 4-inches to about 8-inches, and any range or value there between. In an embodiment, the groove for the O-ring may be offset from the first end **510** of the body **505** about 5.7-inches.

In an embodiment, the filter **530** may have a plurality of rods spaced a distance apart to form a filter, or, alternatively, a formed sheet having drilled holes spaced a distance apart to form a filter. In an embodiment, the plurality of rods may be tapered from a larger outer diameter (OD) to a smaller OD to encourage drilling mud flow to exit in straight lines through the drilling mud outlet **525** (i.e., through flow passages between the plurality rods) to reduce washing (i.e., erosion) of the screen **500**. In an embodiment, the filter **530** may have a plurality of straight rows of holes drilled in a formed sheet to encourage drilling mud flow to exit in straight rows of strings through the drilling mud outlet **525** (i.e., through straight flow passages of the drilled holes) to reduce washing (i.e., erosion) of the screen **500**.

In an embodiment, a first end of a filter **530** may be connected to a second end **515** of the body **505** via a connection; and a second end of a filter **530** may be connected to a first end of the end cap **535** via a connection. Any suitable connection may be used for the drilling mud inlet **530**. For example, suitable connections include, but are not limited to, welds. Connections are well known in the art. In an embodiment, the first end of the filter **530** may be connected to the second end **515** of the body **505** via a weld; and the second end of the filter **530** may be connected to the first end of the end cap **535** via a weld.

In an embodiment, the first end of the filter **530** may fit into a first recess in the second end **515** of the body **505**; and the second end of the filter may fit into a second recess in the first end of the end cap **535**. In an embodiment, the first recess and the second recess may be a plurality of recessed holes or a recessed groove. In an embodiment, the first recess and the second recess may be a plurality of recessed holes.

In an embodiment, the filter **530** may be held together with a retaining ring. In an embodiment, the retaining ring may have a plurality of holes to hold the plurality of rods to form the filter **530**. In an embodiment, the plurality of rods may be connected to the plurality of holes in the retainer ring via a connection. Any suitable connection may be used for the drilling mud inlet **530**. For example, suitable connections include, but are not limited to, welds. Connections are well known in the art. In an embodiment, the plurality of rods may be connected to the plurality of holes in the retainer ring via a weld.

In an embodiment, the filter **530**, including any retaining rings, of the drilling mud screen **500** may be constructed of any suitable material. For example, suitable materials include, but are not limited to, any alloy steel. In an embodiment, the filter **530** may be constructed of 304 stainless steel material. See e.g., FIGS. **5**A & **5**E. In an embodiment, the filter **530** may have a hardened coating to reduce washing (i.e., erosion) of the screen **500**.

In an embodiment, the end cap **535** of the drilling mud screen **500** has an inner surface **555**. In an embodiment, the inner surface **555** of the end cap **535** of the drilling mud screen **500** may redirect the flow to reduce washing (i.e., erosion) of the screen **500**. In an embodiment, the inner surface **555** of the end cap **535** of the drilling mud screen **500** forms an inverted cone relative to the second end **515** of the body **505** of the drilling mud screen **500** to redirect the flow. In an embodiment, the tip of the inverted cone may have a rounded or squared shape.

In an embodiment, the body **505** of the drilling mud screen **500** has a centerline **545** and a length **550**. In an embodiment, the centerline **545** extends through the center of the drilling mud screen inlet **520** to the end cap **535**. In an embodiment, the centerline **545** of the body **505** of the drilling mud screen **500** and the inner surface **555** of the end cap **535** form an angle **560**. In an embodiment, the angle **560** may be from about 30-degrees to about 60-degrees, and any range or value there between. In an embodiment, the first angle **560** may be from about 35-degrees to about 45-degrees, and any range or value there between.

In an embodiment, the end cap **535** of the drilling mud screen **500** may be constructed of any suitable material. For example, suitable materials include, but are not limited to, any alloy steel. In an embodiment, the end cap **535** may be constructed of 304 stainless steel material. See e.g., FIGS. **5**A & **5**E. In an embodiment, the end cap **535** of the drilling mud screen **500** may have a hardened coating to reduce washing (i.e., erosion) of the screen **500**. For example, suitable hardened coatings include, but are not limited to, any Carbide coating or equivalent. In an embodiment, the end cap **535** may have a Carbide coating with about 6% Cobalt binder or equivalent material.

FIG. **5**E illustrates an upper, right side perspective view of the drilling mud screen **500** of FIG. **5**A. As shown in FIG. **5**E, the drilling mud screen **500** has a body **505** having a first end **510** and a second end **515**, a drilling mud inlet **520**, a drilling mud outlet **525**, a filter **530** and an end cap **535**. In an embodiment, the body **505** of the drilling mud screen **500** has a first portion **575** and a second portion **580**.

Optional Plug for One-Piece Body

As discussed above, the one-piece body **405** for the exemplary drilling mud screen system of FIGS. **1**-**4** has a drilling mud flow passage from the drilling mud inlet **420** (through the drilling mud inlet **520** of the drilling mud screen **440**, through the drilling mud outlet **525** of the drilling mud screen **440**) and to the drilling mud outlet **425**. See FIGS. **4**A & **5**.

The one-piece body **405**, however, also has a drilling mud flow passage into a void between the drilling mud inlet **420** the mud screen access port **430**. Id.

FIG. **14** illustrates a cross-sectional view of the exemplary drilling mud screen of FIG. **4**, showing an optional plug installed in the drilling mud screen system. As shown in FIGS. **4** and **14**, the drilling mud screen system **400**, **1400** has a body **405**, **1405** having a first end **410**, **1410** and a second end **415**, **1415**, a drilling mud inlet **420**, **1420** and a drilling mud outlet **425**, **1425**, a drilling mud screen access port **430**, **1430**, an end cap **435**, **1435**, a drilling mud screen **440**, **1440** and a plug **14100**. In an embodiment, the optional plug **14100** has a flow surface **14105**.

In an embodiment, the optional plug **14100** fills the void between the drilling mud inlet **420**, **1420** and the mud screen access port **430**, **1430**; and the flow surface **14105** of the optional plug **14000** directs the drilling mud from the drilling mud inlet **420**, **1420** of the drilling mud screen

system **400**, **1400** to the drilling mud inlet **520** of the drilling mud screen **440**, **1440**, resulting in increased flow efficiency and decreased erosion.

In an embodiment, the plug **14100** may be constructed of any suitable material. For example, suitable materials include, but are not limited to, any alloy steel suitable for a drilling mud application. In an embodiment, the plug **14100** may be constructed of an American Iron and Steel Industry (AISI) **4130/75***k* yield or equivalent material.

In an embodiment, the plug **14100** may have any suitable outer diameter to fit within the body **405**, **1405**. In an embodiment, the outer diameter of the plug **14100** may be from about 3-inches to about 5-inches, and any range or value there between. In an embodiment, the outer diameter of the plug **14100** may be about 3.9-inches.

In an embodiment, the optional plug **14100** has a flow surface **14105** to direct the drilling mud from the drilling mud inlet **420**, **1420** of the drilling mud screen system **400**, **1400** to the drilling mud inlet **520** of the drilling mud screen **440**, **1440**. See e.g., FIGS. **4**A & **5**. In an embodiment, the flow surface **14105** may have any suitable shape to direct the drilling mud from the drilling mud inlet of the drilling mud screen system to the drilling mud inlet of the drilling mud screen. Suitable shapes include, but are not limited to, a backward "J" shape, a curved shape, an "L" shape and any combination or variation thereof, as discussed further below.

FIG. **15**A illustrates an upper, right perspective view of an optional plug with a backward "J" shaped flow surface according to an embodiment of the present invention; and FIG. **15**B illustrates a cross-sectional view of the optional plug with the backward "J" shaped flow surface of FIG. **15**A. As shown in FIGS. **15**A and **15**B, the optional plug **1500** has a body **1505** having a first end **1510** and a second end **1515**, a flow surface **1520**, an optional cavity **1530** and an optional port **1560**.

In an embodiment, the first end **1510** of the body **1505** may have a means to engage **1525** a drilling mud screen puller/installer tool **800**. See e.g., FIGS. **8**A, **15**A-**15**B & **18**A-**18**B. The means to engage **1525** may be any suitable means to accept, and provide a pulling surface for, the drilling mud screen puller/installer tool **800**. For example, a suitable means to engage **1525** includes, but is not limited to, a "key" opening to rotationally engage an inner shoulder.

In an embodiment, the first end **1510** of the plug **1500** may have an optional cavity **1530** extending towards, but not through, the flow surface **1520** of the plug **1500**.

In an embodiment, the first end **1510** of the plug **1500** may have an optional port **1560** extending from an outer surface of the plug **1500** into the optional cavity **1530**.

In an embodiment, the first end **1510** of the plug **1500** may have any suitable inner diameter **1535** of the optional cavity **1530**. In an embodiment, the inner diameter **1535** of the optional cavity **1530** may be from about 1-inch to about 3-inches, and any range or value there between. In an embodiment, the inner diameter **1535** of the optional cavity **1530** may be about 2-inches.

In an embodiment, the plug **1500** may have any suitable outer diameter **1540**. In an embodiment, the outer diameter **1540** of the plug **1500** may be from about 3-inches to about 5-inches, and any range or value there between. In an embodiment, the outer diameter **1540** of the plug **1500** may be about 3.9-inches.

In an embodiment, the body **1505** has a centerline **1545**, a first length **1550** and a second length **1555**. In an embodiment, the first length **1550** of the body **1505** may be any suitable length. In an embodiment, the first length **1550** of the body **1505** may be from about 6-inches to about 10-inches, and any range or value there between. In an embodiment, the length **1550** may be about 8-inches.

In an embodiment, the second length **1555** of the body **1505** may be any suitable length. In an embodiment, the second length **1555** may be from about 8-inches to about 14-inches, and any range or value there between. In an embodiment, the second length **1555** may be about 11.5-inches.

In an embodiment, the second end **1515** of the plug **1500** may have a flow surface **1520**. In an embodiment, the flow surface **1520** may have any suitable shape to direct the drilling mud from the drilling mud inlet of the drilling mud screen system to the drilling mud inlet of the drilling mud screen. Suitable shapes include, but are not limited to, a backward "J" shape, a curved shape, an "L" shape and any combination or variation thereof, as discussed further below. In an embodiment, the flow surface **1520** may have a backward "J" shape. See FIG. **15**B.

FIG. **16**A illustrates an upper, right perspective view of an optional plug with a curved flow surface according to an embodiment of the present invention; and FIG. **16**B illustrates a cross-sectional view of the optional plug with the curved flow surface of FIG. **16**A. As shown in in FIGS. **16**A and **16**B, the optional plug **1600** has a body **1605** having a first end **1610** and a second end **1615**, a flow surface **1620**, an optional cavity **1630** and an optional port **1660**.

In an embodiment, the first end **1610** of the body **1605** may have a means to engage **1625** a drilling mud screen puller/installer tool **800**. See e.g., FIGS. **8**A, **16**A-**16**B, **18**A-**18**B & **29**. The means to engage **1625** may be any suitable means to accept, and provide a pulling surface for, the drilling mud screen puller/installer tool **800**. For example, a suitable means to engage **1625** includes, but is not limited to, a "key" opening to rotationally engage an inner shoulder.

In an embodiment, the first end **1610** of the plug **1600** may have an optional cavity **1630** extending towards, but not through, the flow surface **1620** of the plug **1600**.

In an embodiment, the first end **1610** of the plug **1600** may have an optional port **1660** extending from an outer surface of the plug **1600** into the optional cavity **1630**.

In an embodiment, the first end **1610** of the plug **1600** may have any suitable inner diameter **1635** of the optional cavity **1630**. In an embodiment, the inner diameter **1635** of the optional cavity **1630** may be from about 1-inch to about 3-inches, and any range or value there between. In an embodiment, the inner diameter **1635** of the optional cavity **1630** may be about 2-inches.

In an embodiment, the plug **1600** may have any suitable outer diameter **1640**. In an embodiment, the outer diameter **1640** of the plug **1600** may be from about 3-inches to about 5-inches, and any range or value there between. In an embodiment, the outer diameter **1640** of the plug **1600** may be about 3.9-inches.

In an embodiment, the body **1605** has a centerline **1645**, a first length **1650** and a second length **1655**. In an embodiment, the first length **1650** of the body **1605** may be any suitable length. In an embodiment, the first length **1650** of the body **1605** may be from about 6-inches to about 10-inches, and any range or value there between. In an embodiment, the length **1650** may be about 8-inches.

In an embodiment, the second length **1655** of the body **1605** may be any suitable length. In an embodiment, the second length **1655** may be from about 8-inches to about 15-inches, and any range or value there between. In an embodiment, the second length **1655** may be about 12-inches.

In an embodiment, the second end **1615** of the plug **1600** may have a flow surface **1620**. In an embodiment, the flow surface **1620** may have any suitable shape to direct the drilling mud from the drilling mud inlet of the drilling mud screen system to the drilling mud inlet of the drilling mud screen. Suitable shapes include, but are not limited to, a backward "J" shape, a curved shape, an "L" shape and any combination or variation thereof, as discussed further below. In an embodiment, the flow surface **1620** may have a curved shape. See FIG. **16**B.

FIG. **17**A illustrates an upper, right perspective view of an optional plug with an "L" flow surface according to an embodiment of the present invention; and FIG. **17**B illustrates a cross-sectional view of an optional plug with an "L" flow surface of FIG. **17**A. As shown in FIGS. **17**A and **17**B, the optional plug **1700** has a body **1705** having a first end **1710** and a second end **1715**, a flow surface **1720**, an optional cavity **1730** and an optional port **1760**.

In an embodiment, the first end **1710** of the body **1705** may have a means to engage **1725** a drilling mud screen puller/installer tool **800**. See e.g., FIGS. **8**A, **17**A-**17**B, **18**A-**18**B & **29**. The means to engage **1725** may be any suitable means to accept, and provide a pulling surface for, the drilling mud screen puller/installer tool **800**. For example, a suitable means to engage **1725** includes, but is not limited to, a "key" opening to rotationally engage an inner shoulder.

In an embodiment, the first end **1710** of the plug **1700** may have an optional cavity **1730** extending towards, but not through, the flow surface **1720** of the plug **1700**.

In an embodiment, the first end **1710** of the plug **1700** may have an optional port **1760** extending from an outer surface of the plug **1700** into the optional cavity **1730**.

In an embodiment, the first end **1710** of the plug **1700** may have any suitable inner diameter **1735** of the optional cavity **1730**. In an embodiment, the inner diameter **1735** of the optional cavity **1730** may be from about 1-inch to about 3-inches, and any range or value there between. In an embodiment, the inner diameter **1735** of the optional cavity **1730** may be about 2-inches.

In an embodiment, the plug **1700** may have any suitable outer diameter **1740**. In an embodiment, the outer diameter **1740** of the plug **1700** may be from about 3-inches to about 5-inches, and any range or value there between. In an embodiment, the outer diameter **1740** of the plug **1700** may be about 3.9-inches.

In an embodiment, the body **1705** has a centerline **1745**, a first length **1750** and a second length **1755**. In an embodiment, the first length **1750** of the body **1705** may be any suitable length. In an embodiment, the first length **1750** of the body **1705** may be from about 6-inches to about 10-inches, and any range or value there between. In an embodiment, the length **1750** may be about 8-inches.

In an embodiment, the second length **1755** of the body **1705** may be any suitable length. In an embodiment, the second length **1755** may be from about 8-inches to about 15-inches, and any range or value there between. In an embodiment, the second length **1755** may be about 12-inches.

In an embodiment, the second end **1715** of the plug **1700** may have a flow surface **1720**. In an embodiment, the flow surface **1720** may have any suitable shape to direct the drilling mud from the drilling mud inlet of the drilling mud screen system to the drilling mud inlet of the drilling mud screen. Suitable shapes include, but are not limited to, a backward "J" shape, a curved shape, an "L" shape and any combination or variation thereof, as discussed further below. In an embodiment, the flow surface **1720** may have an "L" shape. See FIG. **17**B.

Two-Piece Body

FIG. **6**A illustrates a photograph of a drilling mud screen system according to an embodiment of the present invention, showing a two-piece body for the system. As shown in FIG. **6**A, the drilling mud screen system **600** has a first body **605***a* having a first end **610***a* and a second end **615***a*, a first drilling mud inlet **620***a*, a first drilling mud outlet **625***a*, a first drilling mud screen access port **630***a*, and an end cap **635**. The drilling mud screen system **600** has a second body **605***b* having a first end **610***b* and a second end **615***b*, a second drilling mud inlet **620***b* and a second drilling mud outlet **625***b*, and a second drilling mud screen access port **630***b*.

In an embodiment, the first drilling mud inlet **620***a* may be fluidly connected to, for example, an outlet of a drilling mud pump via a connection; and the second drilling mud outlet **625***b* may be fluidly connected to an inlet of a vibrator hose via a connection. Any suitable connection may be used for the first drilling mud inlet **620***a* and second drilling mud outlet **625***b*. For example, suitable connections include, but are not limited to, pipe fittings and welds. Connections are well known in the art. In an embodiment, the first drilling mud inlet **620***a* may be fluidly connected to, for example, an outlet of a drilling mud pump via a weld; and the second drilling mud outlet **625***b* may be fluidly connected to an inlet of a vibrator hose via a weld.

As shown in FIG. **6**A, the drilling mud screen access port **630** of the drilling mud screen system **600** may be closed with an end cap **635** via a connection. Any suitable connection may be used. For example, suitable connections include, but are not limited to, pipe fittings. Connections are well known in the art.

In an embodiment, the drilling mud screen access port **630** of the drilling mud screen system **600** may be sealed with an end cap **635** via an O-ring. Any suitable O-ring may be used. For example, suitable O-rings include, but are not limited to, 300 Series O-rings. O-rings are well known in the art.

In an embodiment, the end cap **635** of the drilling mud screen system **600** may comprise a cap, an O-ring and a pipe collar. In an embodiment, the end cap may be a five-inch 1002 WECO cap with an O-ring.

FIG. **6**B illustrates a photograph of the exemplary drilling mud screen system of FIG. **6**A, showing a second drilling mud outlet **625***b*.

FIG. **6**C illustrates a photograph of the exemplary drilling mud screen system of FIGS. **6**A-**6**B.

FIG. **6**D illustrates a photograph of the exemplary drilling mud screen system of FIGS. **6**A-**6**C, showing a detailed view of a first body **605***a* of the drilling mud screen system **600**. In an embodiment, the first body **605***a* may be a five-inch 1002 WECO Y-housing.

Standard Single Inlet and Optional Reduced Angle Inlet Version

FIG. **7**A illustrates an upper, cross-sectional view of a drilling mud screen system **700** according to an embodiment of the present invention, showing a standard single-inlet drilling mud system.

FIG. **19** illustrates a cross-sectional view of the drilling mud screen system in a monitoring configuration **1900** according to an embodiment of the present invention, showing an optional transducer subassembly **19100**.

FIG. **21**A illustrates an upper view of a mud screen system **2100** according to an embodiment of the present invention, showing an optional two-piece body for the system; and

FIG. **21**B illustrates a detailed, cross-sectional view of A-A of FIG. **21**A, showing an entry angle of about 30 degrees.

FIG. **23** illustrates a cross-sectional view of a mud screen system **2300** according to an embodiment of the present invention, showing an optional drilling mud screen insert **23105** inserted into a drilling mud screen **2340**.

As shown in FIGS. **7**A, **19** and **23**, the drilling mud screen system **700**, **1900**, **2100**, **2300** has a first body **705***a*, **1905***a*, **2105***a*, **2305***a* having a first end **710***a*, **1910***a*, **2110***a*, **2310***a* and a second end **715***a*, **1915***a*, **2115***a*, **2315***a*, a first drilling mud inlet **720***a*, **1920***a*, **2120***a*, **2320***a* and a first drilling mud outlet **725***a*, **1925***a*, **2125***a*, **2325***a*, an end cap **735**, **1935**, **2135**, **2335**, and a first drilling mud screen access port **730***a*, **1930***a*, **2130***a*, **2330***a*. The drilling mud screen system **700**, **1900**, **2100**, **2300** has a second body **705***b*, **1905***b*, **2105***b*, **2305***b* having a first end **710***b*, **1910***b*, **2110***b*, **2310***b* and a second end **715***b*, **1915***b*, **2115***b*, **2315***b*, a second drilling mud inlet **720***b*, **1920***b*, **2120***b*, **2320***b*, a second drilling mud outlet **725***b*, **1925***b*, **2125***b*, **2325***b*, and a second drilling mud screen access port **730***b*, **1930***b*, **2130***b*, **2330***b*.

In an embodiment, the first drilling mud inlet **720***a*, **1930***a*, **2130***a*, **2330***a* may be fluidly connected to, for example, an outlet of a drilling mud pump via a connection; and the second drilling mud outlet **725***b*, **1925***b*, **2125***b*, **2325***b* may be fluidly connected to an inlet of a vibrator hose via a connection. Any suitable connection may be used for the first drilling mud inlet **720***a*, **1920***a*, **2130***a*, **2320***a* and second drilling mud outlet **725***b*, **1925***b*, **2125***b*, **2325***b*. For example, suitable connections include, but are not limited to, pipe fittings and welds. Connections are well known in the art. In an embodiment, the first drilling mud inlet **720***a*, **1920***a*, **2120***a*, **2320***a* may be fluidly connected to, for example, an outlet of a drilling mud pump via a weld; and the second drilling mud outlet **725***b*, **1925***b*, **2125***b*, **2325***b* may be fluidly connected to an inlet of a vibrator hose via a weld.

In an embodiment, the first body **705***a*, **1905***a*, **2105***a*, **2305***a* and the second body **705***b*, **1905***b*, **2105***b*, **2305***b* may be fluidly connected by a connection. Any suitable connection may be used for the first body **705***a*, **1905***a*, **2105***a*, **2305***a* and the second body **705***b*, **1905***b*, **2105***b*, **2305***b*. For example, suitable connections include, but are not limited to, pipe fittings. Connections are well known in the art. In an embodiment, the first body **705***a*, **1905***a*, **2105***a*, **2305***a* and the second body **705***b*, **1905***b*, **2105***b*, **2305***b* may be fluidly connected by a union. In an embodiment, the union may be a five-inch 1002 WECO union.

In an embodiment, the first body **705***a*, **1905***a*, **2105***a*, **2305***a* and the second body **705***b*, **1905***b*, **2105***b*, **2305***b* of the drilling mud screen system **700**, **1900**, **2100**, **2300** may be constructed of any suitable material. For example, suitable materials include, but are not limited to, any alloy steel suitable for a drilling mud application. In an embodiment, the first body **705***a*, **1905***a*, **2105***a*, **2305***a* and the second body **705***b*, **1905***b*, **2105***b*, **2305***b* may be constructed of an AISI 4130/75k yield or equivalent material. See e.g., FIGS. **6**A-**6**D. In an embodiment, the inner surface of the first body **705***a*, **1905***a*, **2105***a*, **2305***a* and the second body **705***b*, **1905***b*, **2105***b*, **2305***b* may be unpainted. See e.g., FIG. **6**D. In an embodiment, the outer surface of the first body **705***a*, **1905***a*, **2105***a*, **2305***a* and the second body **705***b*, **1905***b*, **2105***b*, **2305***b* may be painted. See e.g., FIGS. **6**A-**6**D.

In an embodiment, the drilling mud screen system has a length **750**, **1950**, **2150**, **2350**. The length **750**, **1950**, **2150**, **2350** may be any suitable length. In an embodiment, the length **750**, **1950**, **2150**, **2350** may be from about 40-inches to about 80-inches, and any range or value there between. In an embodiment, the length **750**, **1950**, **2150**, **2350** may be about 56-inches.

In an embodiment, the first body **705***a*, **1905***a*, **2105***a*, **2305***a* has a first centerline **745***a*, **1945***a*, **2145***a*, **2345***a* and a first length **750***a*, **1950***a*, **2150***a*, **2350***a*. In an embodiment, the first centerline **745***a*, **1945***a*, **2145***a*, **2345***a* extends through the center of the first drilling mud screen access port **730***a*, **1930***a*, **2130***a*, **2330***a* to the first drilling mud outlet **725***a*, **1925***a*, **2125***a*, **2325***a*. The first length **750***a*, **1950***a*, **2150***a*, **2350***a* of the first body **705***a*, **1905***a*, **2105***a*, **2305***a* may be any suitable length. In an embodiment, the first length **750***a*, **1950***a*, **2150***a*, **2350***a* of the first body **705***a*, **1905***a*, **2105***a*, **2305***a* may be from about 20-inches to about 40-inches, and any range or value there between. In an embodiment, the first length **750***a*, **1950***a*, **2150***a*, **2350***a* may be about 27-inches or 30-inches.

In an embodiment, the first body **705***a*, **1905***a*, **2105***a*, **2305***a* has a second centerline **755**, **1955**, **2155**, **2355** and a third length **750***c*, **1950***c*, **2150***c*, **2350***c*. In an embodiment, the second centerline **755**, **1955**, **2155**, **2355** extends through the center of the first drilling mud inlet **720***a*, **1920***a*, **2120***a*, **2320***a* to the first centerline **745***a*, **1945***a*, **2145***a*, **2345***a* of the first body **705***a*, **1905***a*, **2105***a*, **2305***a*. The third length **750***c*, **1950***c*, **2150***c*, **2350***c* of the first body **705***a*, **1905***a*, **2105***a*, **2305***a* may be any suitable length.

In an embodiment, the third length **750***c*, **1950***c*, **2350***c* of the first body **705***a*, **1905***a*, **2305***a* may be from about 10-inches to about 20-inches, and any range or value there between. In an embodiment, the third length **750***c*, **1950***c*, **2350***c* may be about 14-inches or 16-inches.

In an embodiment, the third length **2150***c* of the first body **2105***a* may be from about 20-inches to about 40-inches, and any range or value there between. In an embodiment, the third length **2150***c* may be about 25-inches or 30-inches.

In an embodiment, the first centerline **745***a*, **1945***a*, **2145***a*, **2345***a* and the second centerline **755**, **1955**, **2155**, **2355** of the first body **705***a*, **1905***a*, **2105***a*, **2305***a* form a first angle **760**, **1960**, **2160**, **2360**.

In an embodiment, the first angle **760**, **1960**, **2360** may be from about 30-degrees to about 120-degrees, and any range or value there between. In an embodiment, the first angle **760**, **1960**, **2360** may be from about 45-degrees to about 60-degrees. In an embodiment, the first angle **760**, **1960**, **2360** may be about 90-degrees.

In an embodiment, the first body **2105***a* may be modified to reduce the entry angle **2160** of the first drilling mud inlet **2120**, resulting in increased flow efficiency and decreased erosion. In an embodiment, the first angle **2160** may be from about 20-degrees to about 120-degrees, and any range or value there between. In an embodiment, the first angle **2160** may be about 30-degrees.

In an embodiment, the first drilling mud inlet **720***a*, **1920***a*, **2120***a*, **2320***a* may be offset from a first end **710***a*, **1910***a*, **2110***a*, **2310***a* of the first body **705***a*, **1905***a*, **2105***a*, **2305***a*. The first drilling mud inlet **720***a*, **1920***a*, **2120***a*, **2320***a* may be offset from a first end **710***a*, **1910***a*, **2110***a*, **2310***a* of the first body **705***a*, **1905***a*, **2105***a*, **2305***a* at any suitable distance. In an embodiment, the second centerline **755**, **1955**, **2155**, **2355** may be offset from the first end **710***a*, **1910***a*, **2310***a* of the first body **705***a*, **1905***a*, **2105***a*, **2305***a* from about 15-inches to about 20-inches, and any range or value there between. In an embodiment, the second centerline **755**, **1955**, **2155**, **2355** may be offset from the first end **710***a*, **1910***a*, **2110***a*, **2310***a* of the first body **705***a*, **1905***a*, **2105***a*, **2305***a* about 18-inches.

In an embodiment, the first drilling mud inlet **720***a*, **1920***a*, **2120***a*, **2320***a* may have any suitable first inner diameter **765***a*, **1965***a*, **2165***a*, **2365***a*; and the first drilling mud inlet **720***a*, **1920***a*, **2120***a*, **2320***a* may have any suitable first outer diameter **770***a*, **1970***a*, **2170***a*, **2370***a*. In an embodiment, the first inner diameter **765***a*, **1965***a*, **2165***a*, **2365***a* of the first drilling mud inlet **720***a*, **1920***a*, **2120***a*, **2320***a* may be from about 3-inches to about 5-inches, and any range or value there between. In an embodiment, the first inner diameter **765***a*, **1965***a*, **2165***a*, **2365***a* of the first drilling mud inlet **720***a*, **1920***a*, **2120***a*, **2320***a* may be about 4-inches.

In an embodiment, the first outer diameter **770***a*, **1970***a*, **2170***a*, **2370***a* of the first drilling mud inlet **720***a*, **1920***a*, **2120***a*, **2320***a* may be from about 4.5-inches to about 6.5-inches, and any range or value there between. In an embodiment, the first outer diameter **770***a*, **1970***a*, **2170***a*, **2370***a* of the first drilling mud inlet **720***a*, **1920***a*, **2120***a*, **2320***a* may be about 5.5-inches.

In an embodiment, the second body **705***b*, **1905***b*, **2105***b*, **2305***b* has a second centerline **745***b*, **1945***b*, **2135***b*, **2345***b* and a second length **750***b*, **1950***b*, **2150***b*, **2350***b*. In an embodiment, the second centerline **745***b*, **1945***b*, **2145***b*, **2345***b* extends through the center of the second drilling mud screen access port **730***b*, **1930***b*, **2130***b*, **2330***b* (and the second drilling mud inlet **720***b*, **1920***b*, **2120***b*, **2320***b*) to the second drilling mud outlet **725***b*, **1925***b*, **2125***b*, **2325***b*. The second length **750***b*, **1950***b*, **2150***b*, **2350***b* of the second body **705***b*, **1905***b*, **2105***b*, **2305***b* may be any suitable length. In an embodiment, the second length **750***b*, **1950***b*, **2150***b*, **2350***b* of the second body **705***b*, **1905***b*, **2105***b*, **2305***b* may be from about 20-inches to about 40-inches, and any range or value there between. In an embodiment, the second length **750***b*, **1950***b*, **2150***b*, **2350***b* may be about 25-inches.

In an embodiment, the second drilling mud inlet **720***b*, **1920***b*, **2120***b*, **2320***b* may have any suitable second inner diameter **765***b*, **1965***b*, **2165***b*, **2365***b*; and the second drilling mud inlet **720***b*, **1920***b*, **2120***b*, **2320***b* may have any suitable second outer diameter **770***b*, **1970***b*, **2170***b*, **2370***b*. In an embodiment, the second inner diameter **765***b*, **1965***b*, **2165***b*, **2365***b* of the second drilling mud inlet **720***b*, **1920***b*, **2120***b*, **2320***b* may be from about 3-inches to about 5-inches, and any range or value there between. In an embodiment, the second inner diameter **765***b*, **1965***b*, **2165***b*, **2365***b* of the second drilling mud inlet **720***b*, **1920***b*, **2120***b*, **2320***b* may be about 4-inches.

In an embodiment, the second outer diameter **770***b*, **1970***b*, **2170***b*, **2370***b* of the second drilling mud inlet **720***b*, **1920***b*, **2120***b*, **2320***b* may be from about 4.5-inches to about 6.5-inches, and any range or value there between. In an embodiment, the second outer diameter **770***b*, **1970***b*, **2170***b*, **2370***b* of the second drilling mud inlet **720***b*, **1920***b*, **2120***b*, **2320***b* may be about 5.5-inches.

In an embodiment, the first body **705***a*, **1905***a*, **2105***a*, **2305***a* has a first portion **775**, **1975**, **2175**, **2375** and the second body **705***b*, **1905***b*, **2105***b*, **2305***b* has a second portion **780**, **1980**, **2180**, **2380**. In an embodiment, the first portion **775**, **1975**, **2175**, **2375** of the first body **705***a*, **1905***a*, **2105***a*, **2305***a* may have a first inner diameter **785**, **1985**, **2185**, **2385** and an outer diameter **795**, **1995**, **2195**, **2395**; and the second portion **780**, **1980**, **2180**, **2380** of the second body **705***b*, **1905***b*, **2105***b*, **2305***b* may have a second inner diameter **790**, **1990**, **2190**, **2390** and an outer diameter **795**, **1995**, **2195**, **2395**.

In an embodiment, the first inner diameter **785**, **1985**, **2185**, **2385** of the first body **705***a*, **1905***a*, **2105***a*, **2305***a* may be from about 3-inches to about 5-inches, and any range or value there between. In an embodiment, the first inner diameter **785**, **1985**, **2185**, **2385** of the first body **705***a*, **1905***a*, **2105***a*, **2305***a* may be about 4-inches.

In an embodiment, the first drilling mud outlet **725***a*, **1925***a*, **2125***a*, **2325***a* may have any suitable first inner diameter **765***a*, **1965***a*, **2165***a*, **2365***a*; and the first drilling mud outlet **725***a*, **1925***a*, **2135***a*, **2325***a* may have any suitable first outer diameter **770***a*, **1970***a*, **2170***a*, **2370***a*. In an embodiment, the first inner diameter **765***a*, **1965***a*, **2165***a*, **2365***a* of the first drilling mud outlet **725***a*, **1925***a*, **2125***a*, **2325***a* may be from about 3-inches to about 5-inches, and any range or value there between. In an embodiment, the first inner diameter **765***a*, **1965***a*, **2165***a*, **2365***a* of the first drilling mud outlet **725***a*, **1925***a*, **2125***a*, **2325***a* may be about 4-inches.

In an embodiment, the first outer diameter **770***a*, **1970***a*, **2170***a*, **2370***a* of the first drilling mud outlet **725***a*, **1925***a*, **2125***a*, **2325***a* may be from about 4.5-inches to about 6.5-inches, and any range or value there between. In an embodiment, the first outer diameter **770***a*, **1970***a*, **2170***a*, **2370***a* of the first drilling mud outlet **725***a*, **1925***a*, **2125***a*, **2325***a* may be about 5-inches.

In an embodiment, the second inner diameter **790**, **1990**, **2190**, **2390** of the second body **705***b*, **1905***b*, **2105***b*, **2305***b* may be from about 3-inches to about 5-inches, and any range or value there between. In an embodiment, the second inner diameter **790**, **1990**, **2190**, **2390** of the second body **705***b*, **1905***b*, **2105***b*, **2305***b* may be about 4-inches.

In an embodiment, a second portion **780**, **1980**, **2180**, **2380** of the second body **705***b*, **1905***b*, **2105***b*, **2305***b* may have a second inner diameter **790**, **1990**, **2190**, **2390** to provide a high flow rate of drilling mud through the drilling mud screen **740**, **1940**, **2140**, **2340**. In an embodiment, the second inner diameter **790**, **1990**, **2190**, **2390** of the second body **705***b*, **1905***b*, **2105***b*, **2305***b* may be from about 3.5-inches to about 5.5-inches, and any range or value there between. In an embodiment, the second inner diameter **790**, **1990**, **2190**, **2390** of the second body **705***b*, **1905***b*, **2105***b*, **2305***b* may be from about 4.5-inches to about 5.5-inches, and any range or value there between.

In an embodiment, the first outer diameter **795**, **1995**, **2195**, **2395** of the first portion **775**, **1975**, **2175**, **2375** of the first body **705***a*, **1905***a*, **2105***a*, **2305***a* and/or the second portion **780**, **1980**, **2180**, **2380** of the second body **705***b*, **1905***b*, **2105***b*, **2305***b* may be from about 5.5-inches to about 7.5-inches, and any range or value there between. In an embodiment, the first outer diameter **795**, **1995**, **2195**, **2395** of the first portion **775**, **1975**, **2175**, **2375** of the first body **705***a*, **1905***a*, **2105***a*, **2305***a* and/or the second portion **780**, **1980**, **2180**, **2380** of the second body **705***b*, **1905***b*, **2105***b*, **2305***b* may be about 6.5-inches.

In an embodiment, the second drilling mud outlet **725***b*, **1925***b*, **2125***b*, **2325***b* may have any suitable second inner diameter **765***b*, **1965***b*, **2165***b*, **2365***b*; and the second drilling mud outlet **725***b*, **1925***b*, **2125***b*, **2325***b* may have any suitable second outer diameter **770***b*, **1970***b*, **2170***b*, **2370***b*. In an embodiment, the second inner diameter **765***b*, **1965***b*, **2165***b*, **2365***b* of the second drilling mud outlet **725***b*, **1925***b*, **2125***b*, **2325***b* may be from about 3-inches to about 5-inches, and any range or value there between. In an embodiment, the second inner diameter **765***b*, **1965***b*, **2165***b*, **2365***b* of the second drilling mud outlet **725***b*, **1925***b*, **2125***b*, **2325***b* may be about 4-inches.

In an embodiment, the second outer diameter **770***b*, **1970***b*, **2170***b*, **2370***b* of the second drilling mud outlet **725***b*, **1925***b*, **2125***b*, **2325***b* may be from about 4.5-inches to about

6.5-inches, and any range or value there between. In an embodiment, the second outer diameter **770***b*, **1970***b*, **2170***b*, **2370***b* of the second drilling mud outlet **725***b*, **1925***b*, **2125***b*, **2325***b* may be about 5.5-inches.

Optional Double Inlet

FIG. **7**B illustrates an upper, cross-sectional view of a drilling mud screen system according to an embodiment of the present invention, showing an optional double-inlet drilling mud system.

As shown in FIG. **7**B, the drilling mud screen system **700** has a first body **705***a* having a first end **710***a* and a second end **715***a*, a first drilling mud inlet **720***a*, an optional first drilling mud inlet **720***a*' and a first drilling mud outlet **725***a*, an end cap **735**, and a first drilling mud screen access port **730***a*. The drilling mud screen system **700** has a second body **705***b* having a first end **710***b* and a second end **715***b*, a second drilling mud inlet **720***b*, a second drilling mud outlet **725***b*, and a second drilling mud screen access port **730***b*.

In an embodiment, the first drilling mud inlet **720***a* and the optional first drilling mud inlet **720***a*' may be fluidly connected to, for example, an outlet of a drilling mud pump via a connection; and the second drilling mud outlet **725***b* may be fluidly connected to an inlet of a vibrator hose via a connection. Any suitable connection may be used for the first drilling mud inlet **720***a*, the optional first drilling mud inlet **720***a*' and the second drilling mud outlet **725***b*. For example, suitable connections include, but are not limited to, pipe fittings and welds. Connections are well known in the art. In an embodiment, the first drilling mud inlet **720***a* and the optional first drilling mud inlet **720***a*' may be fluidly connected to, for example, an outlet of a drilling mud pump via a weld; and the second drilling mud outlet **725***b* may be fluidly connected to an inlet of a vibrator hose via a weld.

In an embodiment, the first body **705***a* and the second body **705***b* may be fluidly connected by a connection. Any suitable connection may be used for the first body **705***a* and the second body **705***b*. For example, suitable connections include, but are not limited to, pipe fittings. Connections are well known in the art. In an embodiment, the first body **705***a* and the second body **705***b* may be fluidly connected by a union. In an embodiment, the union may be a five-inch 1002 WECO union.

In an embodiment, the first body **705***a* and the second body **705***b* of the drilling mud screen system **700** may be constructed of any suitable material. For example, suitable materials include, but are not limited to, any alloy steel suitable for a drilling mud application. In an embodiment, the first body **705***a* and the second body **705***b* may be constructed of an AISI 4130/75k yield or equivalent material. See e.g., FIGS. **6**A-**6**D. In an embodiment, the inner surface of the first body **705***a* and the second body **705***b* may be unpainted. See e.g., FIG. **6**D. In an embodiment, the outer surface of the first body **705***a* and the second body **705***b* may be painted. See e.g., FIGS. **6**A-**6**D.

In an embodiment, the drilling mud screen system has a length **750**. The length **750** may be any suitable length. In an embodiment, the length **750** may be from about 40-inches to about 80-inches, and any range or value there between. In an embodiment, the length **750** may be about 56-inches.

In an embodiment, the first body **705***a* has a first centerline **745***a* and a first length **750***a*. In an embodiment, the first centerline **745***a* extends through the center of the first drilling mud screen access port **730***a* to the first drilling mud outlet **725***a*. The first length **750***a* of the first body **705***a* may be any suitable length. In an embodiment, the first length **750***a* of the first body **705***a* may be from about 20-inches to about 40-inches, and any range or value there between. In an embodiment, the first length **750***a* may be about 30-inches.

In an embodiment, the first body **705***a* has a second centerline **755** and a third length **750***c*. In an embodiment, the second centerline **755** extends through the center of the first drilling mud inlet **720***a* to the first centerline **745***a* of the first body **705***a*. The third length **750***c* of the first body **705***a* may be any suitable length. In an embodiment, the third length **750***c* of the first body **705***a* may be from about 10-inches to about 20-inches, and any range or value there between. In an embodiment, the third length **750***c* may be about 14-inches or 16-inches.

In an embodiment, the first body **705***a* has a second centerline **755** and a third length **750***c*, and an optional second centerline **755**' and an optional third length **750***c*'. In an embodiment, the second centerline **755** extends through the center of the first drilling mud inlet **720***a* to the first centerline **745***a* of the first body **705***a*. In an embodiment, the optional second centerline **755**' extends through the center of the optional first drilling mud inlet **720***a*' to the first centerline **745***a* of the first body **705***a*. The third length **750***c* of the first body **705***a* may be any suitable length; and the optional third length **750***c*' of the first body **705***a* may be any suitable length.

In an embodiment, the third length **750***c* of the first body **705***a* may be from about 10-inches to about 20-inches, and any range or value there between. In an embodiment, the third length **750***c* may be about 14-inches or 16-inches.

In an embodiment, the optional third length **750***c*' of the first body **705***a* may be from about 10-inches to about 20-inches, and any range or value there between. In an embodiment, the optional third length **750***c*' may be about 14-inches or 16-inches.

In an embodiment, the third length **750***c* may be the same as the optional third length **750***c*'. In an embodiment, the third length **750***c* may be different from the optional third length **750***c*'.

In an embodiment, the first centerline **745***a* and the second centerline **755** of the first body **705***a* form a first angle **760**. In an embodiment, the first angle **760** may be from about 30-degrees to about 120-degrees, and any range or value there between. In an embodiment, the first angle **760** may be from about 45-degrees to about 60-degrees. In an embodiment, the first angle **760** may be about 90-degrees.

In an embodiment, the first drilling mud inlet **720***a* may be offset from a first end **710***a* of the first body **705***a*. The first drilling mud inlet **720***a* may be offset from a first end **710***a* of the first body **705***a* at any suitable distance. In an embodiment, the second centerline **755** may be offset from the first end **710***a* of the first body **705***a* from about 15-inches to about 20-inches, and any range or value there between. In an embodiment, the second centerline **755** may be offset from the first end **710***a* of the first body **705***a* about 18-inches.

In an embodiment, the first drilling mud inlet **720***a* may have any suitable first inner diameter **765***a*; and the first drilling mud inlet **720***a* may have any suitable first outer diameter **770***a*. In an embodiment, the first inner diameter **765***a* of the first drilling mud inlet **720***a*' may be from about 3-inches to about 5-inches, and any range or value there between. In an embodiment, the first inner diameter **765***a* of the first drilling mud inlet **720***a* may be about 4-inches.

In an embodiment, the first centerline **745***a* and the optional second centerline **755**' of the first body **705***a* form an optional first angle **760**'. In an embodiment, the optional first angle **760**' may be from about 30-degrees to about 120-degrees, and any range or value there between. In an

embodiment, the optional first angle **760'** may be from about 45-degrees to about 60-degrees. In an embodiment, the optional first angle **760'** may be about 90-degrees.

In an embodiment, the first angle **760** may be the same as the optional first angle **760'**. In an embodiment, the first angle **760** may be different from the optional first angle **760'**.

In an embodiment, the optional first drilling mud inlet **720***a*' may be offset from a first end **710***a* of the first body **705***a*. The optional first drilling mud inlet **720***a*' may be offset from a first end **710***a* of the first body **705***a* at any suitable distance. In an embodiment, the optional first centerline **755'** may be offset from the first end **710***a* of the first body **705***a* from about 15-inches to about 20-inches, and any range or value there between. In an embodiment, the optional first centerline **755'** may be offset from the first end **710***a* of the first body **705***a* about 18-inches.

In an embodiment, the optional second centerline **755'** of the optional first drilling mud inlet **720***a*' may be offset from the second centerline **755** of the first drilling mud inlet **720***a* radially about the first centerline **745***a* of the first body **705***a* to form an optional second angle **760"**. In an embodiment, the optional second angle **760"** may be from about 30 degrees to about 120 degrees, and any range or value there between. In an embodiment, the optional second angle **760"** may be from about 45-degrees to about 120-degrees. In an embodiment, the optional second angle **760"** may be from about 90-degrees to about 120-degrees. In an embodiment, the optional second angle **760"** may be about 120-degrees. See FIG. 7B.

In an embodiment, the optional first drilling mud inlet **720***a*' may have any suitable optional first inner diameter **765***a*'; and the optional first drilling mud inlet **720***a*' may have any suitable optional first outer diameter **770***a*'. In an embodiment, the optional first inner diameter **765***a*' of the optional first drilling mud inlet **720***a*' may be from about 3-inches to about 5-inches, and any range or value there between. In an embodiment, the optional first inner diameter **765***a*' of the optional first drilling mud inlet **720***a*' may be about 4-inches.

In an embodiment, the first outer diameter **770***a* of the first drilling mud inlet **720***a* may be from about 4.5-inches to about 6.5-inches, and any range or value there between. In an embodiment, the first outer diameter **770***a* of the first drilling mud inlet **720***a* may be about 5.5-inches.

In an embodiment, the optional first outer diameter **770***a*' of the optional first drilling mud inlet **720***a*' may be from about 4.5-inches to about 6.5-inches, and any range or value there between. In an embodiment, the optional first outer diameter **770***a*' of the optional first drilling mud inlet **720***a*' may be about 5.5-inches.

In an embodiment, the second body **705***b* has a second centerline **745***b* and a second length **750***b*. In an embodiment, the second centerline **745***b* extends through the center of the second drilling mud screen access port **730***b* (and the second drilling mud inlet **720***b*) to the second drilling mud outlet **725***b*. The second length **750***b* of the second body **705***b* may be any suitable length. In an embodiment, the second length **750***b* of the second body **705***b* may be from about 20-inches to about 40-inches, and any range or value there between. In an embodiment, the second length **750***b* may be about 25-inches.

In an embodiment, the second drilling mud inlet **720***b* may have any suitable second inner diameter **765***b*; and the second drilling mud inlet **720***b* may have any suitable second outer diameter **770***b*. In an embodiment, the second inner diameter **765***b* of the second drilling mud inlet **720***b* may be from about 3-inches to about 5-inches, and any range or value there between. In an embodiment, the second inner diameter **765***b* of the second drilling mud inlet **720***b* may be about 4-inches.

In an embodiment, the second outer diameter **770***b* of the second drilling mud inlet **720***b* may be from about 4.5-inches to about 6.5-inches, and any range or value there between. In an embodiment, the second outer diameter **770***b* of the second drilling mud inlet **720***b* may be about 5.5-inches.

In an embodiment, the first body **705***a* has a first portion **775** and the second body **705***b* has a second portion **780**. In an embodiment, the first portion **775** of the first body **705***a* may have a first inner diameter **785** and an outer diameter **795**; and the second portion **780** of the second body **705***b* may have a second inner diameter **790** and an outer diameter **795**.

In an embodiment, the first inner diameter **785** of the first body **705***a* may be from about 3-inches to about 5-inches, and any range or value there between. In an embodiment, the first inner diameter **785** of the first body **705***a* may be about 4-inches.

In an embodiment, the first drilling mud outlet **725***a* may have any suitable first inner diameter **765***a*; and the first drilling mud outlet **725***a* may have any suitable first outer diameter **770***a*. In an embodiment, the first inner diameter **765***a* of the first drilling mud outlet **725***a* may be from about 3-inches to about 5-inches, and any range or value there between. In an embodiment, the first inner diameter **765***a* of the first drilling mud outlet **725***a* may be about 4-inches.

In an embodiment, the first outer diameter **770***a* of the first drilling mud outlet **725***a* may be from about 4.5-inches to about 6.5-inches, and any range or value there between. In an embodiment, the first outer diameter **770***a* of the first drilling mud outlet **725***a* may be about 5-inches.

In an embodiment, the second inner diameter **790** of the second body **705***b* may be from about 3-inches to about 5-inches, and any range or value there between. In an embodiment, the second inner diameter **790** of the second body **705***b* may be about 4-inches.

In an embodiment, a second portion **780** of the second body **705***b* may have a second inner diameter **790** to provide a high flow rate of drilling mud through the drilling mud screen **740**. In an embodiment, the second inner diameter **790** of the second body **705***b* may be from about 3.5-inches to about 5.5-inches, and any range or value there between. In an embodiment, the second inner diameter **790** of the second body **705***b* may be from about 4.5-inches to about 5.5-inches, and any range or value there between.

In an embodiment, the first outer diameter **795** of the first portion **775** of the first body **705***a* and/or the second portion **780** of the second body **705***b* may be from about 5.5-inches to about 7.5-inches, and any range or value there between. In an embodiment, the first outer diameter **795** of the first portion **775** of the first body **705***a* and/or the second portion **780** of the second body **705***b* may be about 6.5-inches.

In an embodiment, the second drilling mud outlet **725***b* may have any suitable second inner diameter **765***b*; and the second drilling mud outlet **725***b* may have any suitable second outer diameter **770***b*. In an embodiment, the second inner diameter **765***b* of the second drilling mud outlet **725***b* may be from about 3-inches to about 5-inches, and any range or value there between. In an embodiment, the second inner diameter **765***b* of the second drilling mud outlet **725***b* may be about 4-inches.

In an embodiment, the second outer diameter **770***b* of the second drilling mud outlet **725***b* may be from about 4.5-inches to about 6.5-inches, and any range or value there

between. In an embodiment, the second outer diameter **770***b* of the second drilling mud outlet **725***b* may be about 5.5-inches.

Optional Transducer Subassembly for Two-Piece Body

FIG. **19** illustrates a cross-sectional view of the drilling mud screen system in a monitoring configuration **1900** according to an embodiment of the present invention, showing an optional transducer subassembly **19100**. As shown in FIG. **19**, the drilling mud screen system **19200** has a first body **1905***a* having a first end **1910***a* and a second end **1915***a*, a first drilling mud inlet **1920***a* and a first drilling mud outlet **1925***a*, an end cap **1935**, a first drilling mud screen access port **1930***a*, and an optional transducer subassembly **19100**.

As shown in FIGS. **19** and **28**, the drilling mud inlet **1920** of the drilling mud screen system **19200**, **28200** may be fluidly connected to a drilling mud outlet **28125** of the transducer subassembly **19110**, **28100** via a connection. Any suitable connection may be used for the drilling mud inlet **1920** and the drilling mud outlet **28125**. For example, suitable connections include, but are not limited to, pipe fittings and welds. Connections are well known in the art. In an embodiment, the drilling mud inlet **1920** of the drilling mud screen system **19200**, **28200** may be fluidly connected to a drilling mud outlet **28125** of a transducer subassembly **19100** via a weld.

FIG. **20**A illustrates an upper, right side perspective view of an optional transducer subassembly **2000** according to an embodiment of the present invention; and FIG. **20**B illustrates a side perspective view of the optional transducer subassembly of FIG. **20**A. As shown in FIGS. **20**A and **20**B, the optional transducer subassembly **2000** has a body **2005** having a first end **2010** and a second end **2015**, an inlet **2020** and an outlet **2025**, a transducer port **2030**, and a transducer **28105**. See e.g., FIG. **28**.

In an embodiment, the drilling mud inlet **2020** of the optional transducer subassembly **2000** may be fluidly connected to, for example, an outlet of a drilling mud pump via a connection; and the drilling mud outlet **2025** may be fluidly connected to, for example, an inlet of a drilling mud screen system via a connection. Any suitable connection may be used for the drilling mud inlet **2020** and the drilling mud outlet **2025**. For example, suitable connections include, but are not limited to, pipe fittings and welds. Connections are well known in the art. In an embodiment, the drilling mud inlet **2020** of the optional transducer subassembly **2000** may be fluidly connected to, for example, an outlet of a drilling mud pump via a weld; and the drilling mud outlet **2025** of the optional transducer subassembly **2000** may be fluidly connected to, for example, an inlet of a drilling mud screen system via a weld.

In an embodiment, the transducer access port **2030** of the optional transducer subassembly **2000** may be closed with a transducer via a fitting. Any suitable type of transducer may be used. For example, suitable types of transducers include, but are not limited to, displacement transducers, flow rate transducers, pressure transducers, temperature transducers and any combination thereof. Any suitable fitting may be used. For example, suitable fittings include, but are not limited to, pipe fittings. Fittings are well known in the art. In an embodiment, the transducer access port **2030** of the optional transducer subassembly **2000** may be closed with a pressure transducer via a 2-inch 1502 WECO union.

In an embodiment, a computing device (such as a rig computer) may include a bus that directly or indirectly couples the following devices: memory, one or more processors, one or more presentation components, one or more input/output (I/O) ports, I/O components, a user interface and a power supply. The computing device may include a variety of computer-readable media. The memory may include computer-storage media in the form of volatile and/or nonvolatile memory. The presentation component(s) present data indications to a user or other device. The user interface allows the user to input/output information to/from the computing device. The one or more I/O ports may allow the computing device to be logically coupled to other devices including a transducer **28105**, and other I/O components, some of which may be built in. See e.g., FIG. **28**. Examples of other I/O components include a printer, scanner, wireless device, and the like.

In an embodiment, the transducer access port **2030** of the optional transducer subassembly **2000** may be sealed with an end cap via an O-ring. Any suitable O-ring may be used. For example, suitable O-rings include, but are not limited to, 300 Series O-rings. O-rings are well known in the art.

In an embodiment, the body **2005** of the optional transducer subassembly **2000** may be constructed of any suitable material. For example, suitable materials include, but are not limited to, any alloy steel suitable for a drilling mud application. In an embodiment, the body **2005** may be constructed of an American Iron and Steel Industry (AISI) **4130/75***k* yield or equivalent material. See e.g., FIG. **2**. In an embodiment, the inner surface of the body **2005** may be unpainted. In an embodiment, the outer surface of the body **2005** may be painted.

In an embodiment, the body **2005** has a first centerline **2045** and a length **2050**. In an embodiment, the first centerline **2045** extends through the center of the drilling mud inlet **2020** to the drilling mud outlet **2025**. The length **2050** of the body **2005** may be any suitable length. In an embodiment, the length **2050** of the body **2005** may be from about 10-inches to about 30-inches, and any range or value there between. In an embodiment, the length **2050** may be about 12-inches.

In an embodiment, the body **2005** has a second centerline **2055**. In an embodiment, the second centerline **2055** extends through the center of the transducer access port **2030** to the first centerline **2045**.

In an embodiment, the first centerline **2045** and the second centerline **2055** form a first angle **2060**. In an embodiment, the first angle **2060** may be from about 20-degrees to about 120-degrees, and any range or value there between. In an embodiment, the first angle **2060** may be about 45-degrees. In an embodiment, the first angle **2060** may be about 90-degrees.

In an embodiment, the transducer access port **2030** may be offset from a first end **2010** of the body **2005**. The transducer access port **2030** may be offset from a first end **2010** of the body **2005** at any suitable distance. In an embodiment, the second centerline **2055** may be offset from the first end **2010** of the body **2005** from about 6-inches to about 15-inches, and any range or value there between. In an embodiment, the second centerline **2055** may be offset from the first end **2010** of the body **2005** about 7-inches.

In an embodiment, the transducer access port **2030** may have any suitable inner diameter. In an embodiment, the inner diameter of the transducer access port **2030** may be from about 1-inches to about 3-inches, and any range or value there between. In an embodiment, the inner diameter of the transducer access port **2030** may be about 2-inches.

In an embodiment, the outer diameter of the transducer access port **2030** may be from about 1.5-inches to about 3.5-inches, and any range or value there between. In an

embodiment, the outer diameter of the transducer access port **2030** may be about 2.5-inches.

In an embodiment, the drilling mud inlet **2020** may have any suitable inner diameter **2065**; and the drilling mud inlet **2020** may have any suitable outer diameter **2070**. In an embodiment, the inner diameter **2065** of the drilling mud inlet **2020** may be from about 3-inches to about 5-inches, and any range or value there between. In an embodiment, the inner diameter **2065** of the drilling mud inlet **2020** may be about 4-inches.

In an embodiment, the outer diameter **2070** of the drilling mud inlet **2020** may be from about 4.5-inches to about 6.5-inches, and any range or value there between. In an embodiment, the outer diameter **2070** of the drilling mud inlet **2020** may be about 5.5-inches.

In an embodiment, the drilling mud outlet **2025** may have any suitable inner diameter **2065**; and the drilling mud outlet **2025** may have any suitable outer diameter **2070**. In an embodiment, the inner diameter **2065** of the drilling mud outlet **2025** may be from about 3-inches to about 5-inches, and any range or value there between. In an embodiment, the inner diameter **2065** of the drilling mud outlet **2025** may be about 4-inches.

In an embodiment, the outer diameter **2070** of the drilling mud outlet **2025** may be from about 4.5-inches to about 6.5-inches, and any range or value there between. In an embodiment, the outer diameter **2070** of the drilling mud outlet **2025** may be about 5.5-inches.

Drilling Mud Screen

FIG. **5**A illustrates an upper, cross-sectional view of a drilling mud screen **500** according to an embodiment of the present invention, as discussed above. FIG. **5**B illustrates a detailed view of A-A of FIG. **5**A; FIG. **5**C illustrates a detailed view of B of FIG. **5**A; and FIG. **5**D illustrates a detailed view of C of FIG. **5**A. FIG. **5**E illustrates an upper, right side perspective view of the drilling mud screen **500** of FIG. **5**A.

Optional Drilling Mud Screen

FIG. **22**A illustrates an end view of an optional drilling mud screen **2200** according to an embodiment of the present invention; FIG. **22**B illustrates a detailed, cross-sectional view of A-A of FIG. **22**A, showing an optional drilling mud screen insert **22105**, and optional first end retaining ring **22110**, an optional filter length **22115**, and an optional retaining ring **22120**; FIG. **22**C illustrates a detailed view of B of FIG. **22**B; FIG. **22**D illustrates a detailed, cross-sectional view of C-C of FIG. **22**C; and FIG. **22**E illustrates an upper, right perspective view of the drilling mud screen **2200** of FIGS. **22**A-**22**B.

As shown in FIG. **22**B, the drilling mud screen **2200** has a body **2205** having a first end **2210** and a second end **2215**, a drilling mud inlet **2220**, a drilling mud outlet **2225**, a filter **2230** and an end cap **2235**.

In an embodiment, the drilling mud inlet **2220** may be fluidly connected to, for example, an outlet of a drilling mud pump via a connection; and the drilling mud outlet **2225** may be fluidly connected to an inlet of a vibrator hose via a connection. Any suitable connection may be used for the drilling mud inlet **2220** and the drilling mud outlet **2225**. For example, suitable connections include, but are not limited to, pipe fittings and welds. Connections are well known in the art. In an embodiment, the drilling mud inlet **2220** may be fluidly connected to, for example, an outlet of a drilling mud pump via a weld; and the drilling mud outlet **2225** may be fluidly connected to an inlet of a vibrator hose via a weld.

In an embodiment, the body **2205** of the drilling mud screen **2200** may be constructed of any suitable material. For example, suitable materials include, but are not limited to, any alloy steel or tool steel. In an embodiment, the body **2205** may be constructed of an AISI 4145 or equivalent material. See e.g., FIGS. **5**A-**5**E. In an embodiment, the body **2205** may be constructed of tool steel or equivalent material.

In an embodiment, the body **2205** of the drilling mud screen **2200** may have a hardened coating to reduce washing (i.e., erosion) of the screen **2200**. For example, suitable hardened coatings include, but are not limited to, any Carbide coating or equivalent. In an embodiment, the body **2205** may have a Carbide coating with about 6% Cobalt binder or equivalent material.

In an embodiment, the body **2205** of the drilling mud screen **2200** has a centerline **2245** and a length **2250**. In an embodiment, the centerline **2245** extends through the center of the drilling mud screen inlet **2220** to the end cap **2235**. The length **2250** of the body **2205** may be any suitable length. In an embodiment, the length **2250** of the body **2205** may be from about 20-inches to about 30-inches, and any range or value there between. In an embodiment, the length **2250** may be about 25-inches.

In an embodiment, the drilling mud inlet **2220** of the drilling mud screen **2200** may have any suitable inner diameter **2265**; and the drilling mud inlet **2220** may have any suitable outer diameter **2270**. In an embodiment, the inner diameter **2265** of the drilling mud inlet **2220** may be from about 3-inches to about 5-inches, and any range or value there between. In an embodiment, the inner diameter **2265** of the drilling mud inlet **2220** may be about 3.9-inches.

In an embodiment, the outer diameter **2270** of the drilling mud inlet **2220** may be from about 4-inches to about 6-inches, and any range or value there between. In an embodiment, the outer diameter **2270** of the drilling mud inlet **2220** may be about 4-inches.

In an embodiment, the body **2205** of the drilling mud screen **2200** has a first portion **2275** and a second portion **2280**. In an embodiment, the first portion **2275** of the body **2205** has a first length **22125**; and the second portion **2280** of the body **2205** has a second length **22130**. The first portion **2275** and the second portion **2280** may be any suitable length. In an embodiment, the first portion **2275** may have a first length **22125** from about 6-inches to about 10-inches, and any range or value there between; and the second portion **2280** may have a second length **22130** from about 14-inches to about 20-inches, and any range or value there between. In an embodiment, the first portion **2275** may have a first length **22125** of about 7.5-inches; and the second portion **2280** may have a second length **22130** of about 17.5-inches.

In an embodiment, the second portion **2280** of the body **2205** has a first section **22135**, a second section **22145** and a third section **22155**. In an embodiment, the first section **22135** has a third length **22140**, the second section **22145** has a fourth length **22150** and the third section **22155** has a fifth length **22160**. The first section **22135**, the second section **22145** and the third section **22155** may be any suitable length. In an embodiment, the first section **22135** may be up to about 20-25% longer than the second section **22145** and/or the third section **22155**, resulting in increased flow efficiency and decreased erosion.

In an embodiment, the first section **22135** may have a third length **22140** from about 4-inches to about 8-inches, and any range or value there between. In an embodiment, the first section **22135** may have a third length **22140** of about 6-inches.

In an embodiment, the second section **22145** may have a fourth length **22150** from about 4-inches to about 8-inches, and any range or value there between. In an embodiment, the second section **22145** may have a fourth length **22150** of about 5-inches.

In an embodiment, the third section **22155** may have a fifth length **22160** from about 4-inches to about 8-inches, and any range or value there between. In an embodiment, the third section **22155** may have a fifth length **22160** of about 5-inches.

In an embodiment, a second portion **2280** of the body **2205** of the drilling mud screen **2200** may have a filter **2230**. In an embodiment, the filter **2230** may comprise a plurality of rods spaced a distance apart to form a filter. In an embodiment, the distance may be less than a particle size (e.g., diameter) desired to be filtered from the drilling mud. Particle filtration is well known in the art.

In an embodiment, the filter **2230** may comprise a formed sheet having drilled holes spaced a distance apart to form a filter. In an embodiment, the size of the holes (e.g., diameter) may be less than a particle size (e.g., diameter) desired to be filtered. Particle filtration is well known in the art.

In an embodiment, a second portion **2280** of the body **2205** of the drilling mud screen **2200** may have a drilling mud outlet **2225**. In an embodiment, the drilling mud outlet **2225** may comprise a plurality of spaces (i.e., flow passages) between a plurality of rods. In an embodiment, the drilling mud outlet **2225** may comprise a plurality of holes (i.e., flow passages) drilled in a formed sheet.

In an embodiment, a first end **2210** of a first portion **2275** of the body **2205** of the drilling mud screen **2200** may have a first inner diameter **2285**; and a second end **2215** of a second portion **2280** of the body **2205** may have a second inner diameter **2290**.

In an embodiment, the first end **2210** of the first portion **2275** may be shaped to accept a puller/installer plate **975** of a drilling mud screen puller/installer tool **800**, **900**, as discussed below. See e.g., FIGS. **5**A, **8**A & **9**A.

In an embodiment, the body **2205** and/or a filter **2230** of the drilling mud screen **2200** may have a tapered drilling mud flow path from a larger inner diameter (ID) to a smaller ID to reduce washing (i.e., erosion) of the screen **2200**.

In an embodiment, the first inner diameter **2285** of the first end **2210** of the body **2205** of the drilling mud screen **2200** may be from about 3-inches to about 5-inches, and any range or value there between. In an embodiment, the first inner diameter **2285** of the first end **2210** of the body **2205** may be about 3.9-inches.

FIG. **22**D illustrates a detailed view of C-C of FIG. **22**C, showing an outlet of a first portion **2275** of the body **2205** and an inlet of the second portion **2280** of the body **2205**. In an embodiment, an inner diameter of an outlet of the first portion **2275** and an inlet of the second portion **2290** of the body **2205** may be from about 2-inches to about 3-inches, and any range or value there between. In an embodiment, the inner diameter of the outlet of the first portion **2275** of the body **2205** and the inlet of the second portion **2290** of the body **2205** may be about 2.5-inches.

In an embodiment, the outlet of the first portion **2275** and/or the inlet of the second portion **2290** of the body **2205** may be shaped to accept a rounded end **875**, **975** of a drilling mud screen puller/installer tool **800**, **900**. See e.g., FIGS. **5**B, **8**B & **9**B. See also FIGS. **12**B, **13**B & **29**. In an embodiment, the inlet of the second portion **2290** of the body **2205** may have an inner shoulder to provide a pushing surface for the rounded end **875**, **975** of the drilling mud screen puller/installer tool **800**, **900**. Id.

In an embodiment, the outlet of the first portion **2275** and/or the inlet of the second portion **2280** of the body **2205** may have a means to engage **2240** a drilling mud screen puller/installer tool **800**, **900**, as discussed below. See e.g., FIGS. **5**A, **8**A & **9**A. The means to engage **2240** may be any suitable means to accept, and provide a pulling surface for, the drilling mud screen puller/installer tool **800**, **900**. For example, a suitable means to engage **2240** includes, but is not limited to, a "key" opening to rotationally engage an inner shoulder. In an embodiment, the outlet of the first portion **2275** and/or the inlet of the second portion **2290** of the body **2205** may be shaped to accept a puller/installer plate **870**, **970** of a drilling mud screen puller/installer tool **800**, **900**. See e.g., FIGS. **5**B, **8**B & **9**B. See also FIGS. **12**A, **13**A & **29**. In an embodiment, the inlet of the second portion **2290** of the body **2205** may have an inner shoulder to provide a pulling surface for the puller/installer plate **870**, **970** of the drilling mud screen puller/installer tool **800**, **900**. Id.

In an embodiment, the second inner diameter **2290** of the second end **2215** of the body **2205** of the drilling mud screen **2200** may be from about 2-inches to about 3-inches, and any range or value there between. In an embodiment, the second inner diameter **2290** of the second end **2215** of the body **2205** may be about 2.3-inches.

In an embodiment, the outer surface **2295** of the first portion **2275** of the body **2205** of the drilling mud screen **2200** may be adapted to engage one or more shoulders in an inner surface of the body **2205**. In an embodiment, a first shoulder and a second shoulder of the body **2205** may be offset from a first end **2210** of the body **2205**. Cf. FIGS. **4**A & **5**A. The first and second shoulders may be offset from the first end **2210** of the body **2205** at any suitable distance. In an embodiment, the first shoulder may be offset from the first end **2210** of the body **2205** from about 4-inches to about 8-inches, and any range or value there between; and the second shoulder may be offset from the first end **2210** of the body **2205** from about 5-inches to about 9-inches, and any range or value there between. In an embodiment, the first shoulder may be offset from the first end **2210** of the body **2205** about 4.8-inches; and the second shoulder may be offset from the first end **2210** of the body **2205** about 6.8-inches.

In an embodiment, the outer surface **2295** of the body **2205** of the drilling mud screen **2200** may be sealed against an inner surface of the body **2205** via an O-ring. Cf. FIGS. **4**A & **5**A. Any suitable O-ring may be used. For example, suitable O-rings include, but are not limited to, 300 Series O-rings. O-rings are well known in the art.

FIG. **22**C illustrates a detailed view of B of FIG. **22**B, showing a detailed view of a groove for an O-ring. In an embodiment, a groove for an O-ring may be offset from a first end **2210** of the body **2205** of the drilling mud screen **2200**. The groove for the O-ring may be offset from the first end **2210** of the body **2205** at any suitable distance. In an embodiment, the groove for the O-ring may be offset from the first end **2210** of the body **2205** from about 4-inches to about 8-inches, and any range or value there between. In an embodiment, the groove for the O-ring may be offset from the first end **2210** of the body **2205** about 5.7-inches.

In an embodiment, the filter **2230** may have a plurality of rods spaced a distance apart to form a filter, or, alternatively, a formed sheet having drilled holes spaced a distance apart to form a filter. In an embodiment, the plurality of rods may be tapered from a larger outer diameter (OD) to a smaller OD to encourage drilling mud flow to exit in straight lines through the drilling mud outlet **2225** (i.e., through flow

passages between the plurality rods) to reduce washing (i.e., erosion) of the screen **2200**. In an embodiment, the filter **2230** may have a plurality of straight rows of holes drilled in a formed sheet to encourage drilling mud flow to exit in straight rows of strings through the drilling mud outlet **2225** (i.e., through straight flow passages of the drilled holes) to reduce washing (i.e., erosion) of the screen **2200**.

In an embodiment, a first end of a filter **2230** may be connected to a second end **2215** of the body **2205** via a connection; and a second end of a filter **2230** may be connected to a first end of the end cap **2235** via a connection. Any suitable connection may be used for the drilling mud inlet **2230**. For example, suitable connections include, but are not limited to, welds. Connections are well known in the art. In an embodiment, the first end of the filter **2230** may be connected to the second end **2215** of the body **2205** via a weld; and the second end of the filter **2230** may be connected to the first end of the end cap **2235** via a weld.

In an embodiment, the first end of the filter **2230** may fit into a first recess in the second end **2215** of the body **2205**; and the second end of the filter may fit into a second recess in the first end of the end cap **2235**. In an embodiment, the first recess and the second recess may be a plurality of recessed holes or a recessed groove. In an embodiment, the first recess and the second recess may be a plurality of recessed holes.

In an embodiment, the filter **2230** may be held together with a retaining ring. In an embodiment, the retaining ring may have a plurality of holes to hold the plurality of rods to form the filter **2230**. In an embodiment, the plurality of rods may be connected to the plurality of holes in the retainer ring via a connection. Any suitable connection may be used for the drilling mud inlet **2230**. For example, suitable connections include, but are not limited to, welds. Connections are well known in the art. In an embodiment, the plurality of rods may be connected to the plurality of holes in the retainer ring via a weld.

In an embodiment, the filter **2230**, including any retaining rings, of the drilling mud screen **2200** may be constructed of any suitable material. For example, suitable materials include, but are not limited to, any alloy steel or tool steel. In an embodiment, the filter **2230** may be constructed of 304 stainless steel material. See e.g., FIGS. **5**A & **5**E. In an embodiment, the filter **2230** may be constructed of AISI 4145 or equivalent material. In an embodiment, the filter **2230** may be constructed of D2 tool steel or equivalent material.

In an embodiment, the filter **2230** may have a hardened coating to reduce washing (i.e., erosion) of the screen **2200**. For example, suitable hardened coatings include, but are not limited to, any Carbide coating or equivalent. In an embodiment, the filter **2230** may have a Carbide coating with about 6% Cobalt binder or equivalent material.

In an embodiment, the end cap **2235** of the drilling mud screen **2200** has an inner surface **2255**. In an embodiment, the inner surface **2255** of the end cap **2235** of the drilling mud screen **200** may redirect the flow to reduce washing (i.e., erosion) of the screen **2200**. In an embodiment, the inner surface **2255** of the end cap **2235** of the drilling mud screen **2200** forms an inverted cone relative to the second end **2215** of the body **2205** of the drilling mud screen **2200** to redirect the flow. In an embodiment, the tip of the inverted cone may have a rounded or squared shape.

In an embodiment, the body **2205** of the drilling mud screen **2200** has a centerline **2245** and a length **2250**. In an embodiment, the centerline **2245** extends through the center of the drilling mud screen inlet **2220** to the end cap **2235**. In an embodiment, the centerline **2245** of the body **2205** of the drilling mud screen **2200** and the inner surface **2255** of the end cap **2235** form an angle **2260**. In an embodiment, the angle **2260** may be from about 30-degrees to about 60-degrees, and any range or value there between. In an embodiment, the angle **2260** may be from about 35-degrees to about 45-degrees.

In an embodiment, the end cap **2235** of the drilling mud screen **2200** may be constructed of any suitable material. For example, suitable materials include, but are not limited to, any alloy steel or tool steel. In an embodiment, the end cap **2235** may be constructed of 304 stainless steel material or equivalent material. See e.g., FIGS. **5**A & **5**E. In an embodiment, the end cap **2235** may be constructed of AISI 4155 or equivalent material. In an embodiment, the end cap **2235** may be constructed of tool steel or equivalent material.

In an embodiment, the end cap **2235** of the drilling mud screen **2200** may have a hardened coating to reduce washing (i.e., erosion) of the screen **2200**. For example, suitable hardened coatings include, but are not limited to, any Carbide coating or equivalent. In an embodiment, the end cap **2235** may have a Carbide coating with about 6% Cobalt binder or equivalent material.

FIG. **22**E illustrates an upper, right side perspective view of the drilling mud screen **2200** of FIGS. **22**A-**22**B. As shown in FIG. **33**E, the drilling mud screen **2200** has a body **2205** having a first end **2210** and a second end **2215**, a drilling mud inlet **2220**, a drilling mud outlet **2225**, a filter **2230** and an end cap **2235**. In an embodiment, the body **2205** of the drilling mud screen **2200** has a first portion **2275** and a second portion **2280**.

Optional Drilling Mud Screen Insert

FIG. **23** illustrates a cross-sectional view of a mud screen system according to an embodiment of the present invention, showing an optional drilling mud screen insert **23105** inserted into a drilling mud screen **2340**. As shown in FIG. **23**, the drilling mud screen system **700**, **1900**, **2100** has an optional drilling mud screen insert **23105** inserted into a drilling mud screen **2340** to reduce the washing (i.e., erosion) of the drilling mud screen **2340**. In an embodiment, the optional drilling mud screen insert **23105** may be inserted into a first end **510**, **2210** of the drilling mud screen **2340**. See e.g., FIGS. **5** & **22**. In an embodiment, the optional drilling mud screen insert **23105** may be brazed or welded to the drilling mud screen **2340**.

FIG. **24**A illustrates an end view of an optional drilling mud screen insert according to an embodiment of the present invention; FIG. **24**B illustrates a detailed, cross-sectional view of A-A of FIG. **24**A, showing an inlet of the drilling mud screen insert and an outlet of the drilling mud screen insert; and FIG. **24**C illustrates an upper, right perspective view of the optional drilling mud screen insert of FIGS. **24**A-**24**B. As shown in FIG. **24**B, the optional drilling mud screen insert **2400** has a body **2405** having a first end **2410** and a second end **2415**, a drilling mud inlet **2420** and a drilling mud outlet **2425**.

In an embodiment, the body **2405** of the optional drilling mud screen insert **2400** may be constructed of any suitable material. For example, suitable materials include, but are not limited to, any alloy steel or tool steel. In an embodiment, the body **2405** may be constructed of an AISI 4145 or equivalent material. See e.g., FIGS. **5**A-**5**E. In an embodiment, the body **2405** may be constructed of tool steel or equivalent material.

In an embodiment, the body **2405** of the optional drilling mud screen insert **2400** may have a hardened coating to reduce washing (i.e., erosion) of the insert **2400**. For

example, suitable hardened coatings include, but are not limited to, any Carbide coating or equivalent. In an embodiment, the body **2405** may have a Carbide coating with about 6% Cobalt binder or equivalent material.

In an embodiment, the body **2405** of the optional drilling mud screen insert **2400** has a centerline **2445** and a length **2450**. In an embodiment, the centerline **2445** extends through the center of the drilling mud inlet **2420** to the drilling mud outlet **2425**. The length **2450** of the body **2405** may be any suitable length. In an embodiment, the length **2450** of the body **2405** may be from about 5-inches to about 10-inches, and any range or value there between. In an embodiment, the length **2450** may be about 6.9-inches.

In an embodiment, the drilling mud inlet **2420** of the optional drilling mud screen insert **2400** may have any suitable inner diameter **2465**; and the drilling mud inlet **2420** may have any suitable outer diameter **2470**. In an embodiment, the inner diameter **2465** of the drilling mud inlet **2450** may be from about 3-inches to about 5-inches, and any range or value there between. In an embodiment, the inner diameter **2465** of the drilling mud inlet **2420** may be about 3.9-inches.

In an embodiment, the outer diameter **2470** of the drilling mud inlet **2420** may be from about 4-inches to about 6-inches, and any range or value there between. In an embodiment, the outer diameter **2470** of the drilling mud inlet **2420** may be about 4-inches.

In an embodiment, the drilling mud outlet **2425** of the optional drilling mud screen insert **2400** may have any suitable inner diameter **2468**; and the drilling mud outlet **2425** may have any suitable outer diameter **2472**. In an embodiment, the inner diameter **2468** of the drilling mud outlet **2425** may be from about 2-inches to about 5-inches, and any range or value there between. In an embodiment, the inner diameter **2468** of the drilling mud outlet **2425** may be about 3-inches.

In an embodiment, the outer diameter **2472** of the drilling mud outlet **2425** may be from about 3.5-inches to about 6-inches, and any range or value there between. In an embodiment, the outer diameter **2472** of the drilling mud outlet **2425** may be about 3.5-inches.

In an embodiment, the body **2405** of the optional drilling mud screen insert **2400** has a first portion **2475** and a second portion **2480**. In an embodiment, the first portion **2475** of the body **2405** has a first length **2478**; and the second portion **2480** of the body **2405** has a second length **2482**. The first portion **2475** and the second portion **2480** may be any suitable length. In an embodiment, the first portion **2475** may have a first length **2478** from about 1-inch to about 3-inches, and any range or value there between; and the second portion **2480** may have a second length **2482** from about 3-inches to about 7-inches, and any range or value there between. In an embodiment, the first portion **2475** may have a first length **2478** of about 2-inches; and the second portion **2480** may have a second length **2482** of about 4.9-inches.

In an embodiment, the first portion **2475** of the body **2405** may have a first inner diameter **2485** and a second inner diameter **2490**.

In an embodiment, the first inner diameter **2485** of the first portion **2475** may have any suitable diameter. In an embodiment, the first inner diameter **2485** of the first portion **2475** may be from about 3-inches to about 5-inches, and any range or value there between. In an embodiment, the first inner diameter **2485** of the first portion **2475** may be about 3.9-inches.

In an embodiment, the second inner diameter **2490** of the first portion **2475** may have any suitable diameter. In an embodiment, the second inner diameter **2490** of the first portion **2475** may be from about 2-inches to about 5-inches, and any range or value there between. In an embodiment, the second inner diameter **2490** of the first portion **2475** may be about 3-inches.

In an embodiment, an outer surface of the first portion **2475** and an inner surface of the first portion **2475** form an angle **2495** over a third length **24125**. In an embodiment, the angle may be from about 10-degrees to about 20-degrees, and any range or value there between. In an embodiment, the angle **2495** may be about 15-degrees.

In an embodiment, the third length **24125** may be from about 1-inch to about 2-inches, and any range or value there between. In an embodiment, the third length **24125** may be about 1.5-inches.

Optional First End Retaining Ring

FIG. **25** illustrates a detailed, cross-sectional view of the optional drilling mud screen **2500**, showing an optional first end retaining ring **25110**. As shown in FIG. **25**, the optional drilling mud screen **2500** has a body **2505**, a drilling mud outlet **2525**, a filter **2530**, an outer surface of body **2595** and an optional first end retaining ring **25110**.

As shown in FIGS. **22**B and **25**, the filter **2230** may be held together with an optional first end retaining ring **25110**. In an embodiment, the optional filter retaining ring **25110** may have a plurality of holes to hold the plurality of rods to form the filter **2230**. In an embodiment, the plurality of rods may be connected to the plurality of holes in the optional filter retainer ring via a connection. Any suitable connection may be used for the drilling mud inlet **2230**. For example, suitable connections include, but are not limited to, welds. Connections are well known in the art. In an embodiment, the plurality of rods may be connected to the plurality of holes in the retainer ring via a weld.

In an embodiment, the optional first end retaining ring **25110** of the optional drilling mud screen **2500** may be constructed of any suitable material. For example, suitable materials include, but are not limited to, any alloy steel or tool steel. In an embodiment, the optional first end retaining ring **25110** may be constructed of an AISI 4145 or equivalent material. See e.g., FIGS. **5**A-**5**E. In an embodiment, the optional first end retaining ring **25110** may be constructed of D2 tool steel or equivalent material.

In an embodiment, the optional first end retaining ring **25110** of the optional drilling mud screen **2500** may have a hardened coating to reduce washing (i.e., erosion) of the retaining ring **25110**. For example, suitable hardened coatings include, but are not limited to, any Carbide coating or equivalent. In an embodiment, the optional first end retaining ring **25110** may have a Carbide coating with about 6% Cobalt binder or equivalent material.

In an embodiment, the optional first end retaining ring **25110** may be modified to reduce an inside surface exit angle between the first portion **2575** and the second portion **2580** of the drilling mud screen **2500**, resulting in increased flow efficiency and decreased erosion. In an embodiment, the exit angle may be about 10-degrees to about 90-degrees, and any range or value there between. In an embodiment, the exit angle may be from about 10-degrees to about 50-degrees. In an embodiment, the exit angle may be about 30-degrees.

Optional Filter Retaining Ring

FIG. **26**A illustrates a side view of an optional drilling mud screen system **2600** according to an embodiment of the present invention, showing an optional filter length **26115**, and an optional filter retaining ring **26120**; and FIG. **26**B

illustrates a detailed, cross-sectional view of the optional drilling mud screen system **2600** of FIG. **26**A, showing an optional drilling mud screen insert **26105**, an optional filter length **26115**, and an optional filter retaining ring **26120**. As shown in FIGS. **26**A and **26**B, the optional drilling mud screen system **2600** has an optional drilling mud screen insert **26105**, an optional filter length **26115**, and an optional retaining ring **26120**.

In an embodiment, the optional filter retaining ring **26120** of the optional drilling mud screen **2640** may be constructed of any suitable material. For example, suitable materials include, but are not limited to, any alloy steel or tool steel. In an embodiment, the optional filter retaining ring **26120** may be constructed of an AISI 4145 or equivalent material. See e.g., FIGS. **5**A-**5**E. In an embodiment, the optional filter retaining ring **26120** may be constructed of D2 tool steel or equivalent material.

In an embodiment, the optional filter retaining ring **26120** of the optional drilling mud screen **2640** may have a hardened coating to reduce washing (i.e., erosion) of the optional filter retaining ring **26120**. For example, suitable hardened coatings include, but are not limited to, any Carbide coating or equivalent. In an embodiment, the optional filter retaining ring **26120** may have a Carbide coating with about 6% Cobalt binder or equivalent material.

In an embodiment, the optional filter retaining ring **26120** of the optional drilling mud screen **2640** may be modified to reduce inside surface entry and exit angles of the drilling mud screen **2640**, resulting in increased flow efficiency and decreased erosion. In an embodiment, the exit and entry angles may be from about 10-degrees to about 90-degrees, and any range or value there between. In an embodiment, the entry and exit angles may be from about 10-degrees to about 50-degrees. In an embodiment, the entry and exit angles may be about 30-degrees.

FIG. **27**A illustrates an end view of an optional filter retaining ring **2700** according to an embodiment of the present invention; FIG. **27**B illustrates a detailed, cross-sectional view of A-A of FIG. **27**A; and FIG. **27**C illustrates a detailed, cross-sectional view of B of FIG. **27**B.

As shown in FIGS. **22**B and **27**A, the filter **2230** may be held together with an optional filter retaining ring **2700**. In an embodiment, the optional filter retaining ring **2700** may have a plurality of holes **2705** to hold the plurality of rods to form the filter **2230**. In an embodiment, the plurality of rods may be connected to the plurality of holes in the optional filter retainer ring via a connection. Any suitable connection may be used for the drilling mud inlet **2230**. For example, suitable connections include, but are not limited to, welds. Connections are well known in the art. In an embodiment, the plurality of rods may be connected to the plurality of holes in the retainer ring via a weld.

In an embodiment, the optional filter retaining rings **2700** of the optional drilling mud screen **2200** may be constructed of any suitable material. For example, suitable materials include, but are not limited to, any alloy steel or tool steel. In an embodiment, the optional filter retaining rings **2700** may be constructed of 304 stainless steel material. See e.g., FIGS. **5**A & **5**E. In an embodiment, the optional filter retaining rings **2700** may be constructed of AISI 4145 or equivalent material. In an embodiment, the optional filter retaining rings **2700** may be constructed of D2 tool steel or equivalent material.

In an embodiment, the optional filter retaining ring **2700** of the optional drilling mud screen **2220** may have a hardened coating to reduce washing (i.e., erosion) of the screen **2200**. For example, suitable hardened coatings include, but are not limited to, any Carbide coating or equivalent. In an embodiment, the optional filter retaining rings **2700** may have a Carbide coating with about 6% Cobalt binder or equivalent material.

In an embodiment, the optional filter retaining ring **2700** of the optional drilling mud screen **2200** may be modified to reduce inside surface entry and exit angles of the drilling mud screen **2200**, resulting in increased flow efficiency and decreased erosion. In an embodiment, the entry and exit angles may be from about 10-degrees to about 50-degrees, and any range or value there between. In an embodiment, the entry and exit angles may be about 25-degrees or about 30-degrees.

Optional Filter Length

FIG. **26**A illustrates a side view of an optional drilling mud screen system **2600** according to an embodiment of the present invention, showing an optional filter length **26115**, and an optional filter retaining ring **26120**; and FIG. **26**B illustrates a detailed, cross-sectional view of the optional drilling mud screen system **2600** of FIG. **26**A, showing an optional drilling mud screen insert **26105**, an optional filter length **26115**, and an optional filter retaining ring **26120**. As shown in FIGS. **26**A and **26**B, the optional drilling mud screen system **2600** has an optional drilling mud screen insert **26105**, an optional filter length **26115**, and an optional retaining ring **26120**.

As shown in FIG. **26**B, the optional drilling mud screen **2640** has a first portion **2675** and a second portion **2680**. In an embodiment, the first portion **2675** of the optional drilling mud screen **2640** has a first length **26125**; and the second portion **2680** of the optional drilling mud screen **2640** has a second length **26130**. The first portion **2675** and the second portion **2680** may be any suitable length. In an embodiment, the first portion **2675** may have a first length **26125** from about 6-inches to about 10-inches, and any range or value there between; and the second portion **2680** may have a second length **26130** from about 14-inches to about 20-inches, and any range or value there between. In an embodiment, the first portion **2275** may have a first length **26125** of about 7.5-inches; and the second portion **2680** may have a second length **26130** of about 17.5-inches.

In an embodiment, the second portion **2680** of the optional drilling mud screen **2640** has a first section **26135**, a second section **26145** and a third section **26155**. In an embodiment, the first section **26135** has a third length **26140**, the second section **26145** has a fourth length **26150** and the third section **26155** has a fifth length **26160**. The first section **26135**, the second section **26145** and the third section **26155** may be any suitable length. In an embodiment, the first section **26135** of the optional drilling mud screen **2640** may be up to about 20-25% longer than the second section **26145** and/or the third section **26155**, resulting in increased flow efficiency and decreased erosion.

In an embodiment, the first section **26135** may have a third length **26140** from about 4-inches to about 8-inches, and any range or value there between. In an embodiment, the first section **26135** may have a third length **26140** of about 6-inches.

In an embodiment, the second section **26145** may have a fourth length **26150** from about 4-inches to about 8-inches, and any range or value there between. In an embodiment, the second section **26145** may have a fourth length **26150** of about 5-inches.

In an embodiment, the third section **26155** may have a fifth length **26160** from about 4-inches to about 8-inches,

and any range or value there between. In an embodiment, the third section **26155** may have a fifth length **26160** of about 5-inches.

Optional Cementing Configuration

FIG. **28** illustrates a cross-sectional view of a drilling mud screen system in a cementing configuration **2800** according to an embodiment of the present invention, showing an optional first transducer subassembly **28100'** having an optional transducer **28105**, an optional gate valve **28205** and an optional second transducer subassembly **28100"** having an optional low torque plug valve **28110**. As shown in FIG. **28**, the drilling mud screen system in a cementing configuration **2800** comprises an optional first transducer subassembly **28100'** having an optional transducer **28105**, a drilling mud screen system **28200**, an optional gate valve **28300** and an optional second transducer subassembly **28100"** having an optional low torque plug valve **28110**.

In an embodiment, a first drilling mud inlet **28120'** of the optional first transducer subassembly **28100'** may be fluidly connected to, for example, an outlet of a drilling mud pump via a connection; and a first drilling mud outlet **28125'** of the optional first transducer subassembly **28100'** may be fluidly connected to, for example, a drilling mud inlet **28120** of a drilling mud screen system **28200** via a connection. Any suitable connection may be used for the first drilling mud inlet **28120'** and the first drilling mud outlet **28125'**. For example, suitable connections include, but are not limited to, pipe fittings and welds. Connections are well known in the art. In an embodiment, the first drilling mud inlet **28120'** of the optional first transducer subassembly **28100'** may be fluidly connected to, for example, an outlet of a drilling mud pump via a weld; and the first drilling mud outlet **28125'** of the optional first transducer subassembly **28100'** may be fluidly connected to a drilling mud inlet **28220** of a drilling mud screen system **28200** via a weld.

The inlet pressure to the first drilling mud inlet **28120'** of the optional first transducer subassembly **28100'** may be any suitable pressure. In an embodiment, the inlet pressure may be from about 7500 psi to about 10,000 psi, and any range or value there between.

In an embodiment, the transducer access port **28130** of the optional first transducer subassembly **28100'** may be closed with an optional transducer **28105** via a fitting. Any suitable type of transducer **28105** may be used. For example, suitable types of transducers include, but are not limited to, displacement transducers, flow rate transducers, pressure transducers, temperature transducers and any combination thereof. Any suitable fitting may be used. For example, suitable fittings include, but are not limited to, pipe fittings. Fittings are well known in the art. In an embodiment, the transducer access port **2030** of the optional transducer subassembly **2000** may be closed with, for example, a pressure transducer **28105** via a 2-inch 1502 WECO union.

In an embodiment, a computing device (such as a rig computer) may include a bus that directly or indirectly couples the following devices: memory, one or more processors, one or more presentation components, one or more input/output (I/O) ports, I/O components, a user interface and a power supply. The computing device may include a variety of computer-readable media. The memory may include computer-storage media in the form of volatile and/or nonvolatile memory. The presentation component(s) present data indications to a user or other device. The user interface allows the user to input/output information to/from the computing device. The one or more I/O ports may allow the computing device to be logically coupled to other devices including a transducer **28105**, and other I/O components, some of which may be built in. See e.g., FIG. **28**. Examples of other I/O components include a printer, scanner, wireless device, and the like.

In an embodiment, pressure information from, for example, a pressure transducer **28105** will allow a driller to know when a drilling mud screen (not shown) in a drilling mud screen system **28200** is "packing off" For example, the pressure information from the pressure transducer **28105** at the drilling mud inlet **28220** of the drilling mud screen system **28200** may be compared to, for example, pressure information from a pressure transducer on a pressure transducer for a stand pipe. If the pressure decreases at the stand pipe and the pressure increases at the drilling mud inlet **28220** of the drilling mud screen system **28200**, the drilling mud screen (not shown) is likely "packing off" If the pressure decreases or increases at both the stand pipe and the drilling mud screen system, then the problem is likely down hole and not at the drilling mud screen system **28200**. If the problem is at the drilling mud screen system **28200**, the drilling mud screen may be cleaned, repaired or replaced.

In an embodiment, a drilling mud inlet **28220** of the drilling mud screen system **28200** may be fluidly connected to, for example, a first drilling mud outlet **28125'** of the optional first transducer subassembly **28100'** via a connection; and a drilling mud outlet **28225** of the drilling mud screen system **28200** may be fluidly connected to, for example, a drilling mud inlet **28320** of an optional gate valve **28300** via a connection. Any suitable connection may be used for the drilling mud inlet **2820** and the drilling mud outlet **2825**. For example, suitable connections include, but are not limited to, pipe fittings and welds. Connections are well known in the art. In an embodiment, the drilling mud inlet **28200** of the drilling mud screen system **28200** may be fluidly connected to, for example, a first drilling mud outlet **28120'** of the optional first transducer subassembly **28100'** via a weld; and the drilling mud outlet **28225** of the drilling mud screen system **28200** may be fluidly connected to, for example, a drilling mud inlet **28320** of the optional gate valve **28300** via a weld.

The inlet pressure to the drilling mud inlet **28220** of the drilling mud screen system **28200** may be any suitable pressure. In an embodiment, the inlet pressure may be from about 7500 psi to about 10,000 psi, and any range or value there between.

In an embodiment, a drilling mud inlet **28320** of the optional gate valve **28300** may be fluidly connected to, for example, a drilling mud outlet **28220** of the drilling mud screen system **28200** via a connection; and a drilling mud outlet **28325** of the optional gate valve **28300** may be fluidly connected to, for example, a second drilling mud inlet **28120"** of the optional second transducer subassembly **28100"** via a connection. Any suitable connection may be used for the drilling mud inlet **28320** and the drilling mud outlet **28325**. For example, suitable connections include, but are not limited to, pipe fittings and welds. Connections are well known in the art. In an embodiment, the drilling mud inlet **28320** of the optional gate valve **28300** may be fluidly connected to, for example, a drilling mud outlet **28220** of a drilling mud screen system **28200** via a weld; and the drilling mud outlet **28225** of the optional gate valve **28300** may be fluidly connected to, for example, a second drilling mud inlet **28125"** of the optional second transducer subassembly **28100"** via a weld.

In an embodiment, a second drilling mud inlet **28120"** of the optional second transducer subassembly **28100"** may be fluidly connected to, for example, a drilling mud outlet **28325** of the optional gate valve **28300** via a connection; and

a second drilling mud outlet **28125"** of the optional second transducer subassembly **28100"** may be fluidly connected to, for example, an inlet of a vibrator hose via a connection. Any suitable connection may be used for the second drilling mud inlet **28120"** and the second drilling mud outlet **28125"**. For example, suitable connections include, but are not limited to, pipe fittings and welds. Connections are well known in the art. In an embodiment, a second drilling mud inlet **28120"** of the optional second transducer subassembly **28100"** may be fluidly connected to, for example, a drilling mud outlet **28325** of the optional gate valve **28300** via a weld; and a second drilling mud outlet **28125"** of the optional second transducer subassembly **28100"** may be fluidly connected to, for example, an inlet of a vibrator hose via a weld.

In an embodiment, an operator may close an optional gate valve **28300** to isolate a drilling mud screen system **28200** (and an upstream drilling mud pump) from cement for a cementing application. The operator may pump cement through an optional low torque plug valve **28110** in an optional second transducer subassembly **28100"**, through a vibrator hose, through a stand pipe, through a top drive and through a casing running tool (CRT).

Drilling Mud Screen Puller/Installer Tool

FIGS. **8**A-**8**B and **9**A-**9**B illustrate a drilling mud screen puller/installer tool according to an embodiment of the present invention. The tool permits use of a deep bore in a single-piece body of the drilling mud screen system, and removal of the drilling mud screen from the two-piece body without disassembly of the two-piece body. Further, the tool provides additional force to remove "stuck" drilling mud screens from debris entrapment in the system.

Single-Piece Body

FIG. **8**A illustrates an upper cross-sectional view of a drilling mud screen puller/installer tool for the exemplary drilling mud screen system of FIGS. **4**A-**4**C; and FIGS. **18**A-**18**B illustrate an upper cross-sectional view of the drilling mud screen puller/installer tool of FIG. **8**A for the exemplary drilling mud system of FIGS. **4**A-**4**C and **14**.

As shown in FIG. **8**A, the drilling mud screen puller/installer tool **800** has a body **805** having a first end **810** and a second end **815** and a first length **820**, a shaft **825** having a first end **830** and a second end **835** and a second length **840**, a movable sleeve **845** having a first end **850** and a second end **855** and a third length **860**, a handle **865**, and a puller/installer plate **870**.

The first length **820** of the body **805** may be any suitable length. In an embodiment, the first length **820** of the body **805** may be from about 10-inches to about 30-inches, and any range or value there between. In an embodiment, the first length **820** of the body **805** may be from about 18-inches to about 22-inches.

The inner diameter (ID) of the body **805** may be any suitable diameter. In an embodiment, the ID of the body **805** may be from about 1-inch to about 2-inches, and any range or value there between. In an embodiment, the ID of the body **805** may be about 1.5-inches.

The outer diameter (OD) of the body **805** may be any suitable diameter. In an embodiment, the OD of the body **805** may be from about 1.5-inches to about 2.5-inches, and any range or value there between. In an embodiment, the OD of the body **805** may be about 1.9-inches.

In an embodiment, the body **805** of the drilling mud screen puller/installer tool **800** may be constructed of any suitable material. For example, suitable materials include, but are not limited to, any alloy steel. In an embodiment, the body **805** may be constructed of an American Iron and Steel Industry (AISI) **4140** or equivalent material, stainless steel and combinations thereof. See e.g., FIG. **8**A. In an embodiment, the surface of the body **805** may be painted.

In an embodiment, the body **805** may have a first striker plate **8100**.

The striker plate **8100** may be any suitable length. In an embodiment, the length of the striker plate **8100** may be from about 0.3-inches to about 0.6-inches, and any range or value there between. In an embodiment, the length of the striker plate **8100** may be about 0.5-inches.

In an embodiment, the inner diameter (ID) of the striker plate **8100** may be any suitable diameter. In an embodiment, the ID of the striker plate **8100** may be from about 1-inch to about 1.25-inches, and any range or value there between. In an embodiment, the ID of the striker plate **8100** may be about 1.13-inches.

In an embodiment, the outer diameter (OD) of the striker plate **8100** may be any suitable diameter. In an embodiment, the OD of the striker plate **8100** may be from about 2-inches to about 2.25-inches, and any range or value there between. In an embodiment, the OD of the striker plate **8100** may be about 2.130-inches.

In an embodiment, the striker plate **8100** of the drilling mud screen puller/installer tool **800** may be constructed of any suitable material. For example, suitable materials include, but are not limited to, any alloy steel. In an embodiment, the striker plate **8100** may be constructed of stainless steel. See e.g., FIG. **8**A. In an embodiment, the surface of the striker plate **8100** may be painted.

In an embodiment, the striker plate **8100** may be attached to the second end **815** of the body **805** via a connection. Any suitable connection may be used for the striker plate **8100**. For example, suitable connections include, but are not limited to, pipe fittings and welds. Connections are well known in the art. In an embodiment, the striker plate **8100** may be attached to the second end **815** of the body **805** via a weld.

In an embodiment, the second length **840** of the shaft **825** may be any suitable length. In an embodiment, the second length **840** of the shaft **825** may be from about 30-inches to about 50-inches, and any range or value there between. In an embodiment, the second length **840** of the shaft **825** may be from about 40-inches to about 42-inches.

The diameter of the shaft **825** may be any suitable diameter. In an embodiment, the diameter of the shaft **825** may be from about 0.75-inches to about 1.5-inches, and any range or value there between. In an embodiment, the diameter of the shaft **825** may be about 1.1-inches.

In an embodiment, the shaft **825** of the drilling mud screen puller/installer tool **800** may be constructed of any suitable material. For example, suitable materials include, but are not limited to, any alloy steel. In an embodiment, the shaft **825** may be constructed of an American Iron and Steel Industry (AISI) **1018** or equivalent material. See e.g., FIG. **8**A. In an embodiment, the surface of the shaft **825** may be painted.

In an embodiment, the third length **860** of the movable sleeve **845** may be any suitable length. In an embodiment, the third length **860** of the movable sleeve **845** may be from about 10-inches to about 30-inches, and any range or value there between. In an embodiment, the third length **860** of the movable sleeve **845** may be from about 20-inches to about 22-inches.

The inner diameter (ID) of the movable sleeve **845** may be any suitable diameter. In an embodiment, the ID of the movable sleeve **845** may be from about 1-inch to about

2-inches, and any range or value there between. In an embodiment, the ID of the movable sleeve **845** may be about 1.4-inches.

The outer diameter (OD) of the movable sleeve **845** may be any suitable diameter. In an embodiment, the OD of the movable sleeve **845** may be from about 1.5-inches to about 2.5-inches, and any range or value there between. In an embodiment, the OD of the movable sleeve **845** may be about 1.9-inches.

In an embodiment, the movable sleeve **845** of the drilling mud screen puller/installer tool **800** may be constructed of any suitable material. For example, suitable materials include, but are not limited to, any alloy steel. In an embodiment, the movable sleeve **845** may be constructed of an American Iron and Steel Industry (AISI) **4140** or equivalent material. See e.g., FIG. **8**A. In an embodiment, the surface of the movable sleeve **845** may be painted.

In an embodiment, the first end **810** of the body **805** may have a rounded end **875** having a first end and a second end; the second end **815** of the body **805** may have a striker plate **8100**.

The length of the rounded end **875** may be any suitable length. In an embodiment, the length of the rounded end **875** may be from about 1-inch to about 2-inches, and any range or value there between. In an embodiment, the length of the rounded end **875** may be about 1.3-inches.

The inner diameter (ID) of the rounded end **875** may be any suitable diameter. In an embodiment, the ID of the rounded end **875** may be from about 1.5-inches to about 2-inches, and any range or value there between. In an embodiment, the ID of the rounded end **875** may be about 1.7-inches.

The outer diameter (OD) of the rounded end **875** may be any suitable diameter. In an embodiment, the OD of the rounded end **875** may be from about 2.5-inches to about 3.5-inches, and any range or value there between. In an embodiment, the OD of the rounded end **875** may be about 3-inches.

In an embodiment, the first end of the rounded end **875** may have a rounded edge. See e.g., FIG. **8**. The radius of the rounded edge may be any suitable radius. In an embodiment, the radius may be from about 0.35-inches to about 0.4-inches, and any range or value there between. In an embodiment, the radius may be about 0.375-inches.

In an embodiment, the rounded end **875** of the drilling mud screen puller/installer tool **800** may be constructed of any suitable material. For example, suitable materials include, but are not limited to, any alloy steel. In an embodiment, the rounded end **875** may be painted.

In an embodiment, the second end of the rounded end **875** may be attached to the first end **810** of the body **805** via a connection. Any suitable connection may be used for the second end of the rounded end **875**. For example, suitable connections include, but are not limited to, pipe fittings and welds. Connections are well known in the art. In an embodiment, the second end of the rounded end **875** may be attached to the first end **810** of the body **805** via a weld.

In an embodiment, the body **805** may have a sleeve body **880** having a first end **885** and a second end **890** and a fourth length **895**, and a first striker plate **8100**.

The fourth length **895** of the sleeve body **880** may be any suitable length. In an embodiment, the fourth length **895** of the sleeve body **880** may be from about 10-inches to about 40-inches, and any range or value there between. In an embodiment, the fourth length **895** of the sleeve body **880** may be from about 20-inches to about 22-inches.

The inner diameter (ID) of the sleeve body **880** may be any suitable diameter. In an embodiment, the ID of the sleeve body **880** may be from about 1-inch to about 2-inches, and any range or value there between. In an embodiment, the ID of the sleeve body **880** may be about 1.4-inches.

The outer diameter (OD) of the sleeve body **880** may be any suitable diameter. In an embodiment, the OD of the sleeve body **880** may be from about 1.5-inches to about 2.5-inches, and any range or value there between. In an embodiment, the OD of the sleeve body **880** may be about 1.9-inches.

In an embodiment, the sleeve body **880** of the drilling mud screen puller/installer tool **800** may be constructed of any suitable material. For example, suitable materials include, but are not limited to, any alloy steel. In an embodiment, the sleeve body **880** may be constructed of an American Iron and Steel Industry (AISI) **4140** or equivalent material, stainless steel and combinations thereof. See e.g., FIG. **8**A. In an embodiment, the surface of the sleeve body **880** may be painted.

In an embodiment, the rounded end **875** may be attached to the first end **885** of the sleeve body **880** via a connection. Any suitable connection may be used for the rounded end **875**. For example, suitable connections include, but are not limited to, pipe fittings and welds. Connections are well known in the art. In an embodiment, the rounded end **875** may be attached to the first end **885** of the sleeve body **880** via a weld.

In an embodiment, the striker plate **8100** may be attached to the second end **890** of the sleeve body **880** via a connection. Any suitable connection may be used for the striker plate **8100**. For example, suitable connections include, but are not limited to, pipe fittings and welds. Connections are well known in the art. In an embodiment, the striker plate **8100** may be attached to the second end **890** of the sleeve body **880** via a weld.

In an embodiment, the second end **815** of the body **805** may be attached to the first end **830** of the shaft **825** via a connection. Any suitable connection may be used for the second end **815** of the body **805**. For example, suitable connections include, but are not limited to, pipe fittings and welds. Connections are well known in the art. In an embodiment, the second end **815** of the body **805** may be attached to the first end **830** of the shaft **825** via a weld.

In an embodiment, the movable sleeve **845** may be disposed around the shaft **825**.

In an embodiment, a handle **865** may be attached to the movable sleeve **845** via a connection. Any suitable connection may be used for the handle **865**. For example, suitable connections include, but are not limited to, pipe fittings and welds. Connections are well known in the art. In an embodiment, the handle **865** may be attached to the movable sleeve **845** via a weld.

The handle **865** may be any suitable handle to move the moveable sleeve **845** back and forth. Suitable handles **865** include, but are not limited to, one or more hand holds extending from the movable sleeve **845**, a hand ring or hand wheel surrounding the movable sleeve **845**, and combinations thereof.

The diameter of the one or more hand holds of the handle **865** may be any suitable diameter. In an embodiment, the diameter of the one or more hand holds of the handle **865** may be from 0.3-inch to about 1.0-inch, and any range or value there between. In an embodiment, the diameter of the one or more hand holds of the handle **865** may be about 0.5-inch.

In an embodiment, the handle **865** of the drilling mud screen puller/installer tool **800** may be constructed of any suitable material. For example, suitable materials include, but are not limited to, any alloy steel. In an embodiment, the handle **865** may be constructed of an American Iron and Steel Industry (AISI) **1018** or equivalent material. See e.g., FIG. **8**A. In an embodiment, the surface of the handle **865** may be painted.

In an embodiment, the handle **865** may be attached to the movable sleeve **845** via a connection. Any suitable connection may be used for the handle **865**. For example, suitable connections include, but are not limited to, pipe fittings and welds. Connections are well known in the art. In an embodiment, the handle **865** may be attached to the movable sleeve **845** via a weld.

In an embodiment, the puller/installer plate **870** may be attached to a second end **835** of the shaft **825** via a connection. Any suitable connection may be used for the puller/installer plate **870**. For example, suitable connections include, but are not limited to, pipe fittings and welds. Connections are well known in the art. In an embodiment, the puller/installer plate **870** may be attached to the second end **835** of the shaft **825** via a weld.

The length of the puller/installer plate **870** may be any suitable length. In an embodiment, the length of the puller/installer plate **870** may be from about 0.5-inch to about 1-inch, and any range or value there between. In an embodiment, the length of the puller/installer plate **870** may be about 0.725-inch.

The diameter of the puller/installer plate **870** may be any suitable diameter. In an embodiment, the diameter of the puller/installer plate **870** may be from about 2-inches to about 2.5-inches, and any range or value there between. In an embodiment, the diameter of the puller/installer plate **870** may be about 2.3-inches.

In an embodiment, the puller/installer plate **870** of the drilling mud screen puller/installer tool **800** may be constructed of any suitable material. For example, suitable materials include, but are not limited to, any alloy steel. In an embodiment, the puller/installer plate **870** may be constructed of a stainless steel. See e.g., FIG. **8**A. In an embodiment, the surface of the puller/installer plate **870** may be painted.

In an embodiment, the puller/installer plate **870** may have a means to engage **8105** a drilling mud screen **500** of the drilling mud screen system **400**. The means to engage **875** may be any suitable means to engage **8105** the drilling mud screen **500**. For example, a suitable means to engage **8105** includes, but is not limited to, one or more extensions to fit an outlet of the first portion **575** and/or an inlet of the second portion **580** of the body **505** of the drilling mud screen **500** and to engage a shoulder outside the inlet of the second portion **580** of the body **505** of the drilling mud screen **500** and/or to rotationally engage a shoulder inside the inlet of the second portion **580** of the body **505** of the drilling mud screen **500**. Cf. FIGS. **5**B & **8**B. See also FIGS. **12**A-**12**B. In an embodiment, the puller/installer plate **870** may have one or more extensions to fit an outlet of the first portion **575** and/or an inlet of the second portion **580** of the body **505** of the drilling mud screen **500** and to engage a shoulder outside the inlet of the second portion **580** of the body **505** of the drilling mud screen **500** and/or to rotationally engage a shoulder inside the inlet of the second portion **580** of the body **505** of the drilling mud screen **500**. Id.

In an embodiment, the means to engage **8105** may be constructed of any suitable material. For example, suitable materials include, but are not limited to, any alloy steel. In an embodiment, the means to engage **8105** may be constructed of a stainless steel or equivalent material. See e.g., FIG. **8**A. In an embodiment, the means to engage **8105** may be painted.

Two-Piece Body

FIG. **9**A illustrates an upper cross-sectional view of a drilling mud screen puller/installer tool for the exemplary drilling mud screen system of FIG. **7**. As shown in FIG. **9**, the drilling mud screen puller/installer tool **900** has a body **905** having a first end **910** and a second end **915** and a first length **920**, a shaft **925** having a first end **930** and a second end **935** and a second length **940**, a movable sleeve **945** having a first end **950** and a second end **955** and a third length **960**, a handle **965**, and a puller/installer plate **970**.

The first length **920** of the body **905** may be any suitable length. In an embodiment, the first length **920** of the body **905** may be from about 10-inches to about 30-inches, and any range or value there between. In an embodiment, the first length **920** of the body **905** may be from about 18-inches to about 22-inches.

The inner diameter (ID) of the body **905** may be any suitable diameter. In an embodiment, the ID of the body **905** may be from about 1-inch to about 2-inches, and any range or value there between. In an embodiment, the ID of the body **905** may be about 1.5-inches.

The outer diameter (OD) of the body **905** may be any suitable diameter. In an embodiment, the OD of the body **905** may be from about 1.5-inches to about 2.5-inches, and any range or value there between. In an embodiment, the OD of the body **905** may be about 1.9-inches.

In an embodiment, the body **905** of the drilling mud screen puller/installer tool **900** may be constructed of any suitable material. For example, suitable materials include, but are not limited to, any alloy steel. In an embodiment, the body **905** may be constructed of an American Iron and Steel Industry (AISI) **4140** or equivalent material, stainless steel and combinations thereof. See e.g., FIG. **9**A. In an embodiment, the surface of the body **905** may be painted.

In an embodiment, the body **905** may have a striker plate **9100**.

The striker plate **9100** may be any suitable length. In an embodiment, the length of the striker plate **9100** may be from about 0.3-inch to about 0.6-inch, and any range or value there between. In an embodiment, the length of the striker plate **9100** may be about 0.5-inch.

In an embodiment, the inner diameter (ID) of the striker plate **9100** may be any suitable diameter. In an embodiment, the ID of the striker plate **9100** may be from about 1-inch to about 1.25-inches, and any range or value there between. In an embodiment, the ID of the striker plate **9100** may be about 1.13-inches.

In an embodiment, the outer diameter (OD) of the striker plate **9100** may be any suitable diameter. In an embodiment, the OD of the striker plate **9100** may be from about 2-inches to about 2.25-inches, and any range or value there between. In an embodiment, the OD of the striker plate **9100** may be about 2.130-inches.

In an embodiment, the striker plate **9100** of the drilling mud screen puller/installer tool **900** may be constructed of any suitable material. For example, suitable materials include, but are not limited to, any alloy steel. In an embodiment, the striker plate **9100** may be constructed of stainless steel. See e.g., FIG. **9**A. In an embodiment, the surface of the striker plate **9100** may be painted.

In an embodiment, the striker plate **9100** may be attached to the second end **915** of the body **905** via a connection. Any suitable connection may be used for the striker plate **9100**.

For example, suitable connections include, but are not limited to, pipe fittings and welds. Connections are well known in the art. In an embodiment, the striker plate **9100** may be attached to the second end **915** of the body **905** via a weld.

In an embodiment, the second length **940** of the shaft **925** may be any suitable length. In an embodiment, the second length **940** of the shaft **925** may be from about 40-inches to about 60-inches, and any range or value there between. In an embodiment, the second length **940** of the shaft **925** may be from about 50-inches to about 52-inches.

The diameter of the shaft **925** may be any suitable diameter. In an embodiment, the diameter of the shaft **925** may be from about 0.75-inch to about 1.5-inches, and any range or value there between. In an embodiment, the diameter of the shaft **925** may be about 1.1-inches.

In an embodiment, the shaft **925** of the drilling mud screen puller/installer tool **900** may be constructed of any suitable material. For example, suitable materials include, but are not limited to, any alloy steel. In an embodiment, the shaft **925** may be constructed of an American Iron and Steel Industry (AISI) **1018** or equivalent material. See e.g., FIG. **9**A. In an embodiment, the surface of the shaft **925** may be painted.

In an embodiment, the third length **960** of the movable sleeve **945** may be any suitable length. In an embodiment, the third length **960** of the movable sleeve **945** may be from about 10-inches to about 30-inches, and any range or value there between. In an embodiment, the third length **960** of the movable sleeve **945** may be from about 20-inches to about 22-inches.

The inner diameter (ID) of the movable sleeve **945** may be any suitable diameter. In an embodiment, the ID of the movable sleeve **945** may be from about 1-inch to about 2-inches, and any range or value there between. In an embodiment, the ID of the movable sleeve **945** may be about 1.4-inches.

The outer diameter (OD) of the movable sleeve **945** may be any suitable diameter. In an embodiment, the OD of the movable sleeve **945** may be from about 1.5-inches to about 2.5-inches, and any range or value there between. In an embodiment, the OD of the movable sleeve **945** may be about 1.9-inches.

In an embodiment, the movable sleeve **945** of the drilling mud screen puller/installer tool **900** may be constructed of any suitable material. For example, suitable materials include, but are not limited to, any alloy steel. In an embodiment, the movable sleeve **945** may be constructed of an American Iron and Steel Industry (AISI) **4140** or equivalent material. See e.g., FIG. **9**A. In an embodiment, the surface of the movable sleeve **945** may be painted.

In an embodiment, the first end **910** of the body **905** may have a rounded end **975** having a first end and a second end; the second end **915** of the body **905** may have a striker plate **9100**.

The length of the rounded end **975** may be any suitable length. In an embodiment, the length of the rounded end **975** may be from about 1-inch to about 2-inches, and any range or value there between. In an embodiment, the length of the rounded end **975** may be about 1.3-inches.

The inner diameter (ID) of the rounded end **975** may be any suitable diameter. In an embodiment, the ID of the rounded end **975** may be from about 1.5-inches to about 2-inches, and any range or value there between. In an embodiment, the ID of the rounded end **975** may be about 1.7-inches.

The outer diameter (OD) of the rounded end **975** may be any suitable diameter. In an embodiment, the OD of the rounded end **975** may be from about 2.5-inches to about 3.5-inches, and any range or value there between. In an embodiment, the OD of the rounded end **975** may be about 3-inches.

In an embodiment, the first end of the rounded end **975** may have a rounded edge. See e.g., FIG. **9**A. The radius of the rounded edge may be any suitable radius. In an embodiment, the radius may be from about 0.35-inch to about 0.4-inch, and any range or value there between. In an embodiment, the radius may be about 0.375-inch.

In an embodiment, the rounded end **975** of the drilling mud screen puller/installer tool **900** may be constructed of any suitable material. For example, suitable materials include, but are not limited to, any alloy steel. In an embodiment, the rounded end **975** may be painted.

In an embodiment, the second end of the rounded end **975** may be attached to the first end **910** of the body **905** via a connection. Any suitable connection may be used for the second end of the rounded end **975**. For example, suitable connections include, but are not limited to, pipe fittings and welds. Connections are well known in the art. In an embodiment, the second end of the rounded end **975** may be attached to the first end **910** of the body **905** via a weld.

In an embodiment, the body **905** may have a sleeve body **980** having a first end **985** and a second end **990** and a fourth length **995**, and a striker plate **9100**.

The fourth length **995** of the sleeve body **980** may be any suitable length. In an embodiment, the fourth length **995** of the sleeve body **980** may be from about 10-inches to about 40-inches, and any range or value there between. In an embodiment, the fourth length **995** of the sleeve body **980** may be from about 18-inches to about 20-inches.

The inner diameter (ID) of the sleeve body **980** may be any suitable diameter. In an embodiment, the ID of the sleeve body **980** may be from about 1-inch to about 2-inches, and any range or value there between. In an embodiment, the ID of the sleeve body **980** may be about 1.4-inches.

The outer diameter (OD) of the sleeve body **980** may be any suitable diameter. In an embodiment, the OD of the sleeve body **980** may be from about 1.5-inches to about 2.5-inches, and any range or value there between. In an embodiment, the OD of the sleeve body **980** may be about 1.9-inches.

In an embodiment, the sleeve body **980** of the drilling mud screen puller/installer tool **900** may be constructed of any suitable material. For example, suitable materials include, but are not limited to, any alloy steel. In an embodiment, the sleeve body **980** may be constructed of an American Iron and Steel Industry (AISI) **4140** or equivalent material, stainless steel and combinations thereof. See e.g., FIG. **9**A. In an embodiment, the surface of the sleeve body **980** may be painted.

In an embodiment, the rounded end **975** may be attached to the first end **985** of the sleeve body **880** via a connection. Any suitable connection may be used for the rounded end **975**. For example, suitable connections include, but are not limited to, pipe fittings and welds. Connections are well known in the art. In an embodiment, the rounded end **975** may be attached to the first end **985** of the sleeve body **980** via a weld.

In an embodiment, the striker plate **9100** may be attached to the second end **990** of the sleeve body **980** via a connection. Any suitable connection may be used for the striker plate **9100**. For example, suitable connections

include, but are not limited to, pipe fittings and welds. Connections are well known in the art. In an embodiment, the striker plate **9100** may be attached to the second end **990** of the sleeve body **980** via a weld.

In an embodiment, the second end **915** of the body **905** may be attached to the first end **930** of the shaft **925** via a connection. Any suitable connection may be used for the second end **915** of the body **905**. For example, suitable connections include, but are not limited to, pipe fittings and welds. Connections are well known in the art. In an embodiment, the second end **915** of the body **905** may be attached to the first end **930** of the shaft **925** via a weld.

In an embodiment, the movable sleeve **945** may be disposed around the shaft **925**.

In an embodiment, a handle **965** may be attached to the movable sleeve **945** via a connection. Any suitable connection may be used for the handle **965**. For example, suitable connections include, but are not limited to, pipe fittings and welds. Connections are well known in the art. In an embodiment, the handle **965** may be attached to the movable sleeve **945** via a weld.

The handle **965** may be any suitable handle to move the moveable sleeve **945** back and forth. For example, suitable handles **965** include, but are not limited to, one or more hand holds extending from the movable sleeve **945**, a hand ring or hand wheel surrounding the movable sleeve **945**, and combinations thereof.

The diameter of the one or more hand holds of the handle **965** may be any suitable diameter. In an embodiment, the diameter of the one or more hand holds of the handle **965** may be from 0.3-inch to about 1.0-inch, and any range or value there between. In an embodiment, the diameter of the one or more hand holds of the handle **965** may be about 0.5-inch.

In an embodiment, the handle **965** of the drilling mud screen puller/installer tool **900** may be constructed of any suitable material. For example, suitable materials include, but are not limited to, any alloy steel. In an embodiment, the handle **965** may be constructed of an American Iron and Steel Industry (AISI) **1018** or equivalent material. See e.g., FIG. **9**A. In an embodiment, the surface of the handle **965** may be painted.

In an embodiment, the handle **965** may be attached to the movable sleeve **945** via a connection. Any suitable connection may be used for the handle **965**. For example, suitable connections include, but are not limited to, pipe fittings and welds. Connections are well known in the art. In an embodiment, the handle **965** may be attached to the movable sleeve **945** via a weld.

In an embodiment, the puller/installer plate **970** may be attached to a second end **935** of the shaft **925** via a connection. Any suitable connection may be used for the puller/installer plate **970**. For example, suitable connections include, but are not limited to, pipe fittings and welds. Connections are well known in the art. In an embodiment, the puller/installer plate **970** may be attached to the second end **935** of the shaft **925** via a weld.

The length of the puller/installer plate **970** may be any suitable length. In an embodiment, the length of the puller/installer plate **970** may be from about 0.5-inch to about 1-inch, and any range or value there between. In an embodiment, the length of the puller/installer plate **970** may be about 0.725-inch.

The diameter of the puller/installer plate **970** may be any suitable diameter. In an embodiment, the diameter of the puller/installer plate **970** may be from about 2-inches to about 2.5-inches, and any range or value there between. In an embodiment, the diameter of the puller/installer plate **970** may be about 2.3-inches.

In an embodiment, the puller/installer plate **970** of the drilling mud screen puller/installer tool **900** may be constructed of any suitable material. For example, suitable materials include, but are not limited to, any alloy steel. In an embodiment, the puller/installer plate **970** may be constructed of a stainless steel. See e.g., FIG. **9**A. In an embodiment, the surface of the puller/installer plate **970** may be painted.

In an embodiment, the puller/installer plate **970** may have a means to engage **9105** a drilling mud screen **500** of the drilling mud screen system **400**. The means to engage **975** may be any suitable means to engage **9105** the drilling mud screen **500**. For example, a suitable means to engage **9105** includes, but is not limited to, one or more extensions to fit an outlet of the first portion **575** and/or an inlet of the second portion **580** of the body **505** of the drilling mud screen **500** and to engage a shoulder outside the inlet of the second portion **580** of the body **505** of the drilling mud screen **500** and/or to rotationally engage a shoulder inside the inlet of the second portion **580** of the body **505** of the drilling mud screen **500**. Cf. FIGS. **5**B & **8**B. See also FIGS. **13**A-**13**B. In an embodiment, the puller/installer plate **970** may have one or more extensions to fit an outlet of the first portion **575** and/or an inlet of the second portion **580** of the body **505** of the drilling mud screen **500** and to engage a shoulder outside the inlet of the second portion **580** of the body **505** of the drilling mud screen **500** and/or to rotationally engage a shoulder inside the inlet of the second portion **580** of the body **505** of the drilling mud screen **500**. Id.

In an embodiment, the means to engage **9105** may be constructed of any suitable material. For example, suitable materials include, but are not limited to, any alloy steel. In an embodiment, the means to engage **9105** may be constructed of a stainless steel or equivalent material. See e.g., FIG. **9**A. In an embodiment, the means to engage **9105** may be painted.

Optional Drilling Mud Screen Installer/Puller Tool

One-Piece Body

In an embodiment, the drilling mud screen puller/installer tool **800** has a body **805** having a first end **810** and a second end **815** and a first length **820**, a shaft **825** having a first end **830** and a second end **835** and a second length **840**, a movable sleeve **845** having a first end **850** and a second end **855** and a third length **860**, a handle **865**, an optional stop plate (not shown) and a puller/installer plate **870**. Cf. FIG. **29**. In an embodiment, the optional stop plate (not shown) on the shaft **825** of the puller/installer tool **800** indicates that the puller/installer tool **800** (and, therefore, the drilling mud screen **500**) is fully inserted into the drilling mud screen system **800** when the optional stop plate (not shown) contacts the first end **810** of the body **805** of the system **800**.

In an embodiment, an optional groove or painted line may be used instead of the optional stop plate on the shaft **825** of the puller/installer tool **800**. In an embodiment, the optional groove or painted line (not shown) on the shaft **825** of the puller/installer tool **800** indicates that the puller/installer tool **800** (and, therefore, the drilling mud screen **500**) is fully inserted into the drilling mud screen system **800** when the optional groove or painted line (not shown) lines up with the first end **810** of the body **805** of the system **800**.

Two-Piece Body

FIG. **29** illustrates a cross-sectional view of the exemplary drilling mud tool of FIG. **9**A inserting the drilling mud screen of FIG. **5** or **22** into the exemplary drilling mud

screen system of FIG. **7**A or **21**B, showing an optional stop plate. As shown in FIG. **29**, the drilling mud screen puller/installer tool **900** has a body **905** having a first end **910** and a second end **915** and a first length **920**, a shaft **925** having a first end **930** and a second end **935** and a second length **940**, a movable sleeve **945** having a first end **950** and a second end **955** and a third length **960**, a handle **965**, an optional stop plate **29400** and a puller/installer plate **970**. In an embodiment, the optional stop plate **29400** on the shaft **925** of the puller/installer tool **900** indicates that the puller/installer tool **900** (and, therefore, the drilling mud screen **500** or **2200**) is fully inserted into the drilling mud screen system **700** or **2100** when the optional stop plate **29400** contacts the first end **710***a* or **2110***a* of the first body **705***a* or **2105***a* of the system **700** or **2100**.

In an embodiment, an optional groove or painted line may be used instead of the optional stop plate **29400** on the shaft **925** of the puller/installer tool **900**. In an embodiment, the optional groove or painted line (not shown) on the shaft **925** of the puller/installer tool **900** indicates that the puller/installer tool **900** (and, therefore, the drilling mud screen **500** or **2200**) is fully inserted into the drilling mud screen system **700** or **2100** when the optional groove or painted line (not shown) lines up with the first end **710***a* or **2110***a* of the first body **705***a* or **2105***a* of the system **700** or **2100**.

Method of Using Drilling Mud Screen System

FIG. **10** illustrates a flow diagram for a method of using a drilling mud screen system, as discussed above. As shown in FIG. **10**, the method of using a drilling mud screen system **1000** comprises stopping a drilling mud pump to stop flow of drilling mud **1005**, fluidly connecting a drilling mud inlet of a drilling mud screen system downstream of an outlet to the drilling mud pump **1010**, fluidly connecting a drilling mud outlet of the drilling mud screen system upstream of an outlet of a stand pipe **1015**, and starting the drilling mud pump to flow drilling mud through the drilling mud screen system **1020**.

In an embodiment, the drilling mud inlet **120**, **220**, **320**, **400**, **620**, **720** of the drilling mud screen system **100**, **200**, **300**, **400**, **600**, **700** may be fluidly connected to a high pressure outlet of the drilling mud pump via a connection. See also FIGS. **14**, **19**, **21**, **23** & **26**. The inlet pressure to the drilling mud inlet **120**, **220**, **320**, **400**, **620**, **720** of the drilling mud screen system **100**, **200**, **300**, **400**, **600**, **700** may be any suitable pressure. In an embodiment, the inlet pressure may be from about 7500 psi to about 10,000 psi, and any range or value there between.

In an embodiment, the drilling mud outlet **125**, **225**, **325**, **425**, **625**, **725** of the drilling mud screen system **100**, **200**, **300**, **400**, **600**, **700** may be fluidly connected to an inlet of a vibrator hose to the standpipe via a connection.

In an embodiment, the drilling mud inlet **120**, **220**, **320**, **400**, **620**, **720** of the drilling mud screen system **100**, **200**, **300**, **400**, **600**, **700** may be fluidly connected to an outlet of a vibrator hose to a standpipe via a connection. In an embodiment, the drilling mud outlet **125**, **225**, **325**, **425**, **625**, **725** of the drilling mud screen system **100**, **200**, **300**, **400**, **600**, **700** may be fluidly connected to an inlet of the standpipe via a connection.

In an embodiment, the drilling mud screen system **100**, **200**, **300**, **400**, **600**, **700** may be fluidly connected at any point in the standpipe via a connection.

Optional Monitoring Configuration

FIG. **10** illustrates a flow diagram for a method of using a drilling mud screen system, as discussed above. As shown in FIG. **10**, the method of using a drilling mud screen system **1000** comprises stopping a drilling mud pump to stop flow of drilling mud **1005**, fluidly connecting a drilling mud inlet of a drilling mud screen system downstream of an outlet to the drilling mud pump **1010**, fluidly connecting a drilling mud outlet of the drilling mud screen system upstream of an outlet of a stand pipe **1015**, and starting the drilling mud pump to flow drilling mud through the drilling mud screen system **1020**.

In an embodiment, step **1010** comprises fluidly connecting a drilling mud inlet of a transducer subassembly downstream of an outlet to the drilling mud pump; and fluidly connecting a drilling mud inlet of a drilling mud screen system downstream of a drilling mud outlet to the transducer subassembly.

As shown in FIGS. **19** and **28**, the drilling mud inlet **1920** of the drilling mud screen system **19200**, **28200** may be fluidly connected to a drilling mud outlet **28125** of the transducer subassembly **19110**, **28100** via a connection. Any suitable connection may be used for the drilling mud inlet **1920** and the drilling mud outlet **28125**. For example, suitable connections include, but are not limited to, pipe fittings and welds. Connections are well known in the art. In an embodiment, the drilling mud inlet **1920** of the drilling mud screen system **19200**, **28200** may be fluidly connected to a drilling mud outlet **28125** of a transducer subassembly **19100** via a weld.

In an embodiment, the method of using a drilling mud screen system **1000** further comprises monitoring a transducer of the transducer subassembly for property information (e.g., displacement, flow rate, pressure, and/or temperature) at the drilling mud screen system.

In an embodiment, a computing device (such as a rig computer) may include a bus that directly or indirectly couples the following devices: memory, one or more processors, one or more presentation components, one or more input/output (I/O) ports, I/O components, a user interface and a power supply. The computing device may include a variety of computer-readable media. The memory may include computer-storage media in the form of volatile and/or nonvolatile memory. The presentation component(s) present data indications to a user or other device. The user interface allows the user to input/output information to/from the computing device. The one or more I/O ports may allow the computing device to be logically coupled to other devices including a transducer **28105**, and other I/O components, some of which may be built in. See e.g., FIG. **28**. Examples of other I/O components include a printer, scanner, wireless device, and the like.

In an embodiment, the method of using a drilling mud screen system **1000** further comprises using the property information (e.g., displacement, flow rate, pressure, and/or temperature) from the transducer of the transducer subassembly to determine a status of the drilling mud screen system. In an embodiment, the method further comprises using the information to determine when to clean, repair or replace the drilling mud screen in the drilling mud screen system.

In an embodiment, pressure information from, for example, a pressure transducer **28105** will allow a driller to know when a drilling mud screen **1940** in a drilling mud screen system **19200**, **28200** is "packing off." For example, the pressure information from the pressure transducer **28105** at the drilling mud inlet **1920** of the drilling mud screen system **19200**, **28200** may be compared to, for example, pressure information from a pressure transducer on a pressure transducer for a stand pipe. If the pressure decreases at the stand pipe and the pressure increases at the drilling mud inlet **1920** of the drilling mud screen system **19200**, **28200**,

the drilling mud screen **1940** is likely "packing off" If the pressure decreases or increases at both the stand pipe and the drilling mud screen system, then the problem is likely down hole and not at the drilling mud screen system **19200**, **28200**. If the problem is at the drilling mud screen system **19200**, **28200**, the drilling mud screen **1940** may be cleaned, repaired or replaced.

Optional Cementing Configuration

FIG. **10** illustrates a flow diagram for a method of using a drilling mud screen system, as discussed above. As shown in FIG. **10**, the method of using a drilling mud screen system **1000** comprises stopping a drilling mud pump to stop flow of drilling mud **1005**, fluidly connecting a drilling mud inlet of a drilling mud screen system downstream of an outlet to the drilling mud pump **1010**, fluidly connecting a drilling mud outlet of the drilling mud screen system upstream of an outlet of a stand pipe **1015**, and starting the drilling mud pump to flow drilling mud through the drilling mud screen system **1020**.

In an embodiment, step **1010** comprises fluidly connecting a first drilling mud inlet of a first transducer subassembly downstream of an outlet to the drilling mud pump; and fluidly connecting a first drilling mud inlet of a drilling mud screen system downstream of an outlet to the first transducer subassembly.

In an embodiment, step **1015** comprises fluidly connecting a drilling mud outlet of the drilling mud screen system upstream of a drilling mud inlet of a gate valve, fluidly connecting a drilling mud outlet of the gate valve to a second drilling mud inlet to a second transducer subassembly, and fluidly connecting a second drilling mud outlet of the second transducer subassembly upstream of an outlet of a stand pipe.

As shown in FIG. **28**, the first drilling mud inlet **28120'** of the optional first transducer subassembly **28100'** may be fluidly connected to, for example, an outlet of a drilling mud pump via a connection; and the first drilling mud outlet **28125'** of the optional first transducer subassembly **28100'** may be fluidly connected to, for example, the drilling mud inlet **28120** of the drilling mud screen system **28200** via a connection. Any suitable connection may be used for the first drilling mud inlet **28120'** and the first drilling mud outlet **28125'**. For example, suitable connections include, but are not limited to, pipe fittings and welds. Connections are well known in the art. In an embodiment, the first drilling mud inlet **28120'** of the optional first transducer subassembly **28100'** may be fluidly connected to, for example, an outlet of a drilling mud pump via a weld; and the first drilling mud outlet **28125'** of the optional first transducer subassembly **28100'** may be fluidly connected to the drilling mud inlet **28220** of the drilling mud screen system **28200** via a weld.

The inlet pressure to the first drilling mud inlet **28120'** of the optional first transducer subassembly **28100'** may be any suitable pressure. In an embodiment, the inlet pressure may be from about 7500 psi to about 10,000 psi, and any range or value there between.

In an embodiment, a computing device (such as a rig computer) may include a bus that directly or indirectly couples the following devices: memory, one or more processors, one or more presentation components, one or more input/output (I/O) ports, I/O components, a user interface and a power supply. The computing device may include a variety of computer-readable media. The memory may include computer-storage media in the form of volatile and/or nonvolatile memory. The presentation component(s) present data indications to a user or other device. The user interface allows the user to input/output information to/from the computing device. The one or more I/O ports may allow the computing device to be logically coupled to other devices including a transducer **28105**, and other I/O components, some of which may be built in. See e.g., FIG. **28**. Examples of other I/O components include a printer, scanner, wireless device, and the like.

In an embodiment, pressure information from, for example, a pressure transducer **28105** will allow a driller to know when a drilling mud screen **1940** in a drilling mud screen system **28200** is "packing off." For example, the pressure information from the pressure transducer **28105** at the drilling mud inlet **28220** of the drilling mud screen system **28200** may be compared to, for example, pressure information from a pressure transducer on a pressure transducer for a stand pipe. If the pressure decreases at the stand pipe and the pressure increases at the drilling mud inlet **28220** of the drilling mud screen system **28200**, the drilling mud screen **1940** is likely "packing off." If the pressure decreases or increases at both the stand pipe and the drilling mud screen system, then the problem is likely down hole and not at the drilling mud screen system **28200**. If the problem is at the drilling mud screen system **28200**, the drilling mud screen **1940** may be cleaned, repaired or replaced.

In an embodiment, the drilling mud inlet **28220** of the drilling mud screen system **28200** may be fluidly connected to, for example, the first drilling mud outlet **28125'** of the optional first transducer subassembly **28100'** via a connection; and a drilling mud outlet **28225** of the drilling mud screen system **28200** may be fluidly connected to, for example, the drilling mud inlet **28320** of the optional gate valve **28300** via a connection. Any suitable connection may be used for the drilling mud inlet **2820** and the drilling mud outlet **2825**. For example, suitable connections include, but are not limited to, pipe fittings and welds. Connections are well known in the art. In an embodiment, the drilling mud inlet **28200** of the drilling mud screen system **28200** may be fluidly connected to, for example, the first drilling mud outlet **28120'** of the optional first transducer subassembly **28100'** via a weld; and the drilling mud outlet **28225** of the drilling mud screen system **28200** may be fluidly connected to, for example, the drilling mud inlet **28320** of the optional gate valve **28300** via a weld.

The inlet pressure to the drilling mud inlet **28220** of the drilling mud screen system **28200** may be any suitable pressure. In an embodiment, the inlet pressure may be from about 7500 psi to about 10,000 psi, and any range or value there between.

In an embodiment, the drilling mud inlet **28320** of the optional gate valve **28300** may be fluidly connected to, for example, the drilling mud outlet **28220** of the drilling mud screen system **28200** via a connection; and a drilling mud outlet **28325** of the optional gate valve **28300** may be fluidly connected to, for example, the second drilling mud inlet **28120"** of the optional second transducer subassembly **28100"** via a connection. Any suitable connection may be used for the drilling mud inlet **28320** and the drilling mud outlet **28325**. For example, suitable connections include, but are not limited to, pipe fittings and welds. Connections are well known in the art. In an embodiment, the drilling mud inlet **28320** of the optional gate valve **28300** may be fluidly connected to, for example, the drilling mud outlet **28220** of the drilling mud screen system **28200** via a weld; and the drilling mud outlet **28225** of the optional gate valve **28300** may be fluidly connected to, for example, a second drilling mud inlet **28125"** of the optional second transducer subassembly **28100"** via a weld.

In an embodiment, the second drilling mud inlet **28120"** of the optional second transducer subassembly **28100"** may be fluidly connected to, for example, the drilling mud outlet **28325** of the optional gate valve **28300** via a connection; and the second drilling mud outlet **28125"** of the optional second transducer subassembly **28100"** may be fluidly connected to, for example, an inlet of a vibrator hose via a connection. Any suitable connection may be used for the second drilling mud inlet **28120"** and the second drilling mud outlet **28125"**. For example, suitable connections include, but are not limited to, pipe fittings and welds. Connections are well known in the art. In an embodiment, the second drilling mud inlet **28120"** of the optional second transducer subassembly **28100"** may be fluidly connected to, for example, the drilling mud outlet **28325** of the optional gate valve **28300** via a weld; and a second drilling mud outlet **28125"** of the optional second transducer subassembly **28100"** may be fluidly connected to, for example, an inlet of a vibrator hose via a weld.

In an embodiment, an operator may close an optional gate valve **28300** to isolate a drilling mud screen system **28200** (and an upstream drilling mud pump) from cement for a cementing application. The operator may pump cement through an optional low torque plug valve **28110** in an optional second transducer subassembly **28100"**, through a vibrator hose, through a stand pipe, through a top drive and through a casing running tool (CRT).

Method of Removing and Replacing Drilling Mud Screen

FIG. **11** illustrates a method of removing and replacing a drilling mud screen in a drilling mud screen system, as discussed above. As shown in FIG. **11**, the method of removing and replacing a drilling mud screen **1100** comprises providing a drilling mud screen system **1105**, stopping a drilling mud pump connected to the drilling mud screen system **1110**, opening a drilling mud screen access port and/or a union in the drilling mud screen system to remove and replace a drilling mud screen **1115**, accessing the interior of the drilling mud screen system to pull the drilling mud screen from the drilling mud screen system and to install a replacement drilling mud screen into the drilling mud screen system **1120**, closing the drilling mud screen access port and or the union in the drilling mud screen system **1125**, and operating the drilling mud pump to produce flow of drilling mud through the drilling mud screen system **1130**.

In an embodiment, step **1115** comprises opening a drilling mud screen access port **130**, **230**, **330**, **430** in the body **105**, **205**, **305 405** of the single-piece drilling mud screen system **100**, **200**, **300 400**. See also FIG. **14**. In an embodiment, step **1115** comprises opening the drilling mud screen access port **630**, **730** of the first body **605***a*, **705***a* and opening a union between the first body **605***a*, **705***a* and the second body **605***b*, **705***b* of the two-piece drilling mud screen system **600**, **700** to remove and replace the drilling mud screen **500**. See also FIGS. **19**, **21**, **23** & **26**.

In an embodiment, step **1125** comprises closing the drilling mud screen access port **130**, **230**, **330**, **430** in the body **105**, **205**, **305**, **405** of the single piece drilling mud screen system **100**, **200**, **300**, **400**. In an embodiment, step **1125** comprises closing the drilling mud screen access port **130**, **230**, **330**, **430** of the first body **605***a*, **705***a* and connecting the union between the first body **605***a*, **705***a* and the second body **650***b*, **705***b* of the two-piece drilling mud screen system **600**, **700**.

In an embodiment, step **1115** comprises opening the drilling mud screen access port **130**, **230**, **330**, **430**, **630**, **730** of the drilling mud screen system **100**, **200**, **300**, **400**, **600**, **700**, and step **1120** comprises using a puller/installer plate **870**, **970** of a puller/installer tool **800**, **900** to engage and pull the drilling mud screen **500** from the drilling mud screen system **100**, **200**, **300**, **400**, **600**, **700**. In an embodiment, step **1115** comprises opening the drilling mud screen access port **130**, **230**, **330**, **430**, **630**, **730** of the drilling mud screen system **100**, **200**, **300**, **400**, **600**, **700**, and step **1120** comprises using the puller/installer plate **875**, **975** and/or a rounded end **875**, **975** of the puller/installer tool **800**, **900** to install the replacement drilling mud screen **500** into the drilling mud screen system **100**, **200**, **300**, **400**, **600**, **700**.

In an embodiment, step **1120** further comprises using a groove, painted line or stop plate **29110** on the shaft **825**, **925** of the puller/installer tool **800**, **900** to indicate when the puller/installer tool **800**, **900** (and therefore, the drilling mud screen **500**, **2200**) is fully inserted in the system **100**, **200**, **300**, **400**, **600**, **700**, **2100**.

Improved Exemplary Valve-Style Drilling Mud Screen System

Body with Face-Roller Camming Mechanism

FIG. **30**A illustrates an upper, left perspective view of an exemplary drilling mud screen system **3000** with a camming seal separator **30200** having a face-roller camming mechanism **30200***a* according to an embodiment of the present invention, showing a rotating subassembly **30400** in a closed position; FIG. **30**C illustrates an upper, left perspective view of the drilling mud screen system **3000** of FIG. **30**A, showing a rotating subassembly **30400** in the open position; FIG. **30**D illustrates a detail view of a rotating subassembly **30400** of FIGS. **30**A-**30**C; and FIG. **30**E illustrates a cross-sectional view of the drilling mud screen system **3000** of FIG. **30**A, showing the rotating subassembly **30400** in a closed position.

FIG. **31**A illustrates left perspective view of an exemplary drilling mud screen system **3100** with a camming seal separator **31200** having a face-roller camming mechanism **31200***a* according to an embodiment of the present invention, showing a rotating subassembly **31400** in a closed position; FIG. **31**C illustrates a left perspective view of the drilling mud screen system **3100** of FIG. **30**A, showing a rotating subassembly **31400** in the open position; FIG. **31**D illustrates a partial cross-sectional view of the drilling mud screen system **3100** of FIG. **31**A, showing the rotating subassembly **31400** in the closed position; and FIG. **31**E illustrates a partial cross-sectional view of the drilling mud screen system **3100** of FIGS. **31**A and **31**C-**31**D, showing the rotating subassembly **31400** in the open position.

FIG. **30**B illustrates the upper, left perspective view of the drilling mud screen system **3000** of FIG. **30**A, showing an optional first transducer subassembly **30100***a* and an optional second transducer subassembly **30100***b*, as discussed below; and FIG. **31**B illustrates the left perspective view of the drilling mud screen system **3100** of FIG. **31**A, showing an optional first transducer subassembly **31100***a* and an optional second transducer subassembly **31100***b*.

As shown in FIGS. **30**A-**30**E and **31**A-**31**E, the drilling mud screen system **3000**, **3100** has a body **3005**, **3105** having a first end **3010**, **3110** and a second end **3015**, **3115**, a drilling mud inlet **3020**, **3120** and a drilling mud outlet **3025**, **3125**, and a drilling mud screen access port **3130**.

In an embodiment, the drilling mud screen system **3000**, **3100** has a drilling mud screen **3040**, **3140** fluidly connected to and disposed between the first drilling mud inlet **3020**, **3120** and the first drilling outlet **3025**, **3125**.

In an embodiment, the body **3005**, **3105** has a first portion **3005***a*, **3105***a*, a second portion **3005***b*, **3105***b* and a third portion **3005***c*, **3105***c*. In an embodiment, the first portion **3005***a*, **3105***a* of the body **3005**, **3105** is an inlet portion. In an embodiment, the second portion **3005***b*, **3105***b* of the

body **3005**, **3105** is a rotating subassembly/drilling mud screen portion. In an embodiment, the third portion **3005***c*, **3105***c* of the body **3005**, **3105** is an outlet portion.

In an embodiment, the first portion **3005***a*, **3105***a* and the third portion **3005***c*, **3105***c* may be any suitable shape. For example, suitable shapes include, but are not limited to, a cone, a cylinder, a rectangular prism (e.g., cubic, cuboid), a pentagonal prism, a sphere, a spheroid, a triangular prism, and combinations and/or portions thereof. In an embodiment, the first portion **3005***a*, **3105***a* and the third portion **3005***c*, **3105***c* may be a cylinder or a combination of cylinders.

In an embodiment, the first portion **3005***a*, **3105***a* and the third portion **3005***c*, **3105***c* may have any suitable inner diameter or dimension. For example, a suitable inner diameter for the first portion **3005***a*, **3105***a* and the third portion **3005***c*, **3105***c* may be from about 2-inches to about 5-inches, and any range or value there between. In an embodiment, the inner diameter of the first portion **3005***a*, **3105***a* and the third portion **3005***c*, **3105***c* may be about 4.06-inches.

In an embodiment, the second portion **3005***b*, **3105***b* may be any suitable shape. For example, suitable shapes include, but are not limited to, a cone, a cylinder, a rectangular prism (e.g., cubic, cuboid), a pentagonal prism, a sphere, a spheroid, a triangular prism, and combinations and/or portions thereof. In an embodiment, the second portion **3005***b*, **3105***b* may be a rectangular prism with open opposing sides. See e.g., FIGS. **30**A-**30**C & **31**A-**31**C (open front and rear sides).

In an embodiment, the second portion **3005***b*, **3105***b* may have any suitable inner diameter or dimension. For example, a suitable inner diameter for the second portion **3005***b*, **3105***b* may be from about 6-inches to about 14-inches, and any range or value there between. In an embodiment, the inner diameter for the second portion **3005***b*, **3105***b* may be about 10-inches.

For example, a suitable inner dimension for the second portion **3005***b*, **3105***b* may be from about 6-inches to about 14-inches square, and any range or value there between. In an embodiment, the inner dimension for the second portion **3005***b*, **3105***b* may be about 10-inches square.

In an embodiment, a drilling mud inlet **3020**, **3120** of the drilling mud screen system **3000**, **3100** may be fluidly connected to a high-pressure outlet of a drilling mud pump via a connection. In an embodiment, a drilling mud outlet **3025**, **3125** of the drilling mud screen system **3000**, **3100** may be fluidly connected to an inlet of a vibrator hose to a standpipe via a connection.

Alternatively, the drilling mud screen system **3000**, **3100** may be installed between an outlet of the vibrator hose and an inlet of the standpipe, or at any point in the standpipe via a connection.

In an embodiment, the drilling mud inlet **3020**, **3120** may be fluidly connected to, for example, an outlet to a drilling mud pump via a connection; and the drilling mud outlet **3025**, **3125** may be fluidly connected to, for example, an inlet to a vibrator hose via a connection. Any suitable connection may be used for the drilling mud inlet and the drilling mud outlet. For example, suitable connections include, but are not limited to, pipe fittings and welds. Connections are well known in the art. In an embodiment, the drilling mud inlet **3020**, **3120** may be fluidly connected to, for example, an outlet to a drilling mud pump via a weld; and the drilling mud outlet **3025**, **3125** may be fluidly connected to, for example, an inlet to a vibrator hose via a weld.

In an embodiment, the body **3005**, **3105** of the drilling mud screen system **3000**, **3100** may be constructed of any suitable material. For example, suitable materials include, but are not limited to, any alloy suitable for a drilling mud application. In an embodiment, the body **3005**, **3105** may be constructed of a low alloy steel (e.g., 4140, 4145, 4330), a stainless steel (e.g., 17-4, 304, 316), a super alloy (e.g., Inconel), a titanium alloy (e.g., Ti-6Al-4V, Ti-6Al-6V-2Sn), a copper alloy (e.g., Beryllium Copper), a Cobalt alloy (e.g., Stellite), an Aluminum alloy (e.g., 2024, 6061, 7075) and combination thereof. In an embodiment, the body **3005**, **3105** may be constructed of an American Iron and Steel Industry (AISI) **4130**/**75***k* yield or equivalent material. In an embodiment, the inner surface of the body **3005**, **3105** may be unpainted. In an embodiment, the outer surface of the body **3005**, **3105** may be painted.

Pivot Subassembly

As shown in FIGS. **30**A-**30**E and **31**A-**31**E, the second portion **3005***b*, **3105***b* of the body **3005**, **3105** and/or the rotating subassembly **30400**, **31400** has a first shaft stud **3075**, **3175**, a second shaft stud **3080**, **3180**, a pivot shaft **3085**, **3185**, and a pivot drive **3090**, **3190**.

In an embodiment, the rotating subassembly **30400**, **31400** may be retained in the second portion **3005***b*, **3105***b* of the body **3005**, **3105** via the first shaft stud **3075**, **3175** and the second shaft stud **3080**, **3180**. See e.g., FIGS. **30**E & **31**D-**31**E. In an embodiment, the rotating subassembly **30400**, **31400** may be retained in the second portion **3005***b*, **3105***b* of the body **3005**, **3105** via the first shaft stud **3075**, **3175** and the second shaft stud **3080**, **3180** such that the rotating subassembly **30400**, **31400** may rotate with respect to the second portion **3005***b*, **3105***b* of the body **3005**, **3105**.

In an embodiment, the first shaft stud **3075**, **3175** or the second shaft stud **3080**, **3180** may be attached to the pivot drive **3090**, **3190** via the pivot shaft **3085**, **3185**.

In an embodiment, the pivot drive **3090**, **3190** may be any suitable means of leverage to rotate the rotating subassembly. For example, suitable means of leverage include, but are not limited to a handle, a gear box, or other driving means. In an embodiment, the pivot drive **3090**, **3190** has a handle. In an embodiment, the pivot drive **3090**, **3190** has a gear box.

Rotating Subassembly

FIG. **30**D illustrates a detail view of a rotating subassembly **30400** of FIGS. **30**A-**30**C; and FIG. **30**E illustrates a cross-sectional view of the drilling mud screen system **3000** of FIG. **30**A, showing the rotating subassembly **30400** in a closed position.

FIG. **31**D illustrates a partial cross-sectional view of the drilling mud screen system **3100** of FIG. **31**A, showing the rotating subassembly **31400** in the closed position; and FIG. **31**E illustrates a partial cross-sectional view of the drilling mud screen system **3100** of FIGS. **31**A and **31**C-**31**D, showing the rotating subassembly **31400** in the open position.

As shown in FIGS. **30**D-**30**E and **31**D-**31**E, the rotating subassembly **30400**, **31400** has a first body **30405***a*, **31405***a* having a first end **30410***a*, **31410***a*, a second end **30415***a*, **31415***a*, a first drilling mud inlet **30420***a*, **31420***a* and a first drilling mud outlet **30425***a*, **31425***a*, a second body **30405***b*, **31405***b* having a first end **30410***b*, **31410***b*, a second end **30415***b*, **31415***b*, a second drilling mud inlet **30420***b*, **31420***b* and a second drilling mud outlet **30425***b*, **31425***b*, and a third body **30405***c*, **31405***c* having a first end **30410***c*, **31410***c*, a second end **30415***c*, **31415***c*, a third drilling mud inlet **30420***c*, **31420***c* and a third drilling mud outlet **30425***c*, **31425***c*.

In an embodiment, the rotating subassembly **30400**, **31400** has a drilling mud screen **3040**, **3140** fluidly con-

nected to and disposed between the second drilling mud inlet **30420***b*, **31420***b* and the second drilling outlet **30425***b*, **31425***b*.

In an embodiment, the first body **30405***a*, **31405***a* is an inlet portion. In an embodiment, the second body **30405***b*, **31405***b* is a rotating subassembly/drilling mud screen portion. In an embodiment, the third body **30405***c*, **31405***c* is an outlet portion.

In an embodiment, the first body **30405***a*, **31405***a* and the third body **30405***c*, **31405***c* may be any suitable shape. For example, suitable shapes include, but are not limited to, a cone, a cylinder, a rectangular prism (e.g., cubic, cuboid), a pentagonal prism, a sphere, a spheroid, a triangular prism, and combinations and/or portions thereof. In an embodiment, the first body **30405***a*, **31405***a* and the third body **30405***c*, **31405***c* may be a cylinder or a combination of cylinders.

In an embodiment, the first body **30405***a*, **31405***a* and the third body **30405***c*, **31405***c* may have any suitable inner diameter or dimension. For example, a suitable inner diameter for the first body **30405***a*, **31405***a* and the third body **30405***c*, **31405***c* may be from about 2-inches to about 5-inches, and any range or value there between. In an embodiment, the inner diameter of the first body **30405***a*, **31405***a* and the third body **30405***c*, **31405***c* may be about 4.06-inches.

In an embodiment, the second body **30405***b*, **31405***b* may be any suitable shape. For example, suitable shapes include, but are not limited to, a cone, a cylinder, a rectangular prism (e.g., cubic, cuboid), a pentagonal prism, a sphere, a spheroid, a triangular prism, and combinations and/or portions thereof. In an embodiment, the second body **30405***b*, **31405***b* may be a combination of cylinders. See e.g., FIGS. **30**D-**30**E & **31**D-**31**E.

In an embodiment, the second body **30405***b*, **31405***b* may have any suitable inner diameter or dimension. For example, a suitable inner diameter for the second body **30405***b*, **31405***b* may be from about 4-inches to about 10-inches, and any range or value there between. In an embodiment, the inner diameter for the second body **30405***b*, **31405***b* may be about 6-inches.

In an embodiment, an internal drilling mud outlet **3025***a*, **3125***a* of the body **3005**, **3105** of the drilling mud screen system **3000**, **3100** may be fluidly connected to the first drilling mud inlet **30420***a*, **31420***a* of the first body **30405***a*, **31405***a* of the rotating subassembly **30400**, **31400**.

In an embodiment, the first drilling mud outlet **30425***a*, **31425***a* of the first body **30405***a*, **31405***a* of the rotating subassembly **30400**, **31400** may be fluidly connected to the second drilling mud inlet **30420***b*, **31420***b* of the second body **30405***b*, **31405***b* of the rotating subassembly **30400**, **31400**.

In an embodiment, the second drilling mud outlet **30425***b*, **31425***b* of the second body **30405***b*, **31405***b* of the rotating subassembly **30400**, **31400** may be fluidly connected to the third drilling mud inlet **30420***c*, **31420***c* of the third body **30405***c*, **31405***c* of the rotating subassembly **30400**, **31400**.

In an embodiment, the third drilling mud outlet **30425***c*, **31425***c* of the third body **30405***c*, **31405***c* of the rotating subassembly **30400**, **31400** may be fluidly connected to an internal drilling mud inlet **3020***a*, **3120***a* of the body **3005**, **3105** of the drilling mud screen system **3000**, **3100**.

In an embodiment, a first guard ring **30430***a*, **31430***a* may be disposed between the body **3005**, **3105** of the drilling mud screen system **3000**, **3100** and the first end **30410***a*, **31410***a* of the first body **30405***a*, **31405***a* of the rotating subassembly **30400**, **31400**. See e.g., FIGS. **30**E & **31**D-**31**E. In an embodiment, a first guard ring **30430***a*, **31430***a* may be disposed in a first piston cavity **30435***a*, **31435***a* between the body **3005**, **3105** of the drilling mud screen system **3000**, **3100** and the first end **30410***a*, **31410***a* of the first body **30405***a*, **31405***a* of the rotating subassembly **30400**, **31400** to prevent buildup and compaction of debris in the first piston cavity **30435***a*, **31435***a*.

In an embodiment, a second guard ring **30430***b*, **31430***b* may be disposed between the second end **30415***c*, **31415***c* of the third body **30405***c*, **31405***c* of the rotating subassembly **30400**, **31400** and the body **3005**, **3105** of the drilling mud screen system **3000**, **3100**. See e.g., FIGS. **30**E & **31**D-**31**E. In an embodiment, a second guard ring **30430***b*, **31430***b* may be disposed in a second piston cavity **30435***b*, **31435***b* between the second end **30415***c*, **31415***c* of the third body **30405***c*, **31405***c* of the rotating subassembly **30400**, **31400** and the body **3005**, **3105** of the drilling mud screen system **3000**, **3100** to prevent buildup and compaction of debris in the second piston cavity **30435***b*, **31435***b*.

In an embodiment, the first guard ring **30430***a*, **31430***a* and the second guard ring **30430***b*, **31430***b* may be constructed of any suitable compressible material to prevent buildup and compaction of debris in first piston cavity **30435***a*, **31435***a* and the second piston cavity **30435***b*, **31435***b*, respectively.

In an embodiment, a first spring **30440***a*, **31440***a* may be disposed between the body **3005**, **3105** of the drilling mud screen system **3000**, **3100** and the first body **30405***a*, **31405***a* of the rotating subassembly **30400**, **31400**. See e.g., FIGS. **30**E & **31**D-**31**E. In an embodiment, a first spring **30440***a*, **31440***a* may be disposed in a first seal piston cavity **30445***a*, **31445***a* between the body **3005**, **3105** of the drilling mud screen system **3000**, **3100** and the first body **30405***a*, **31405***a* of the rotating subassembly **30400**, **31400** to engage and seal a second end **30415***a*, **31415***a* of the first body **30405***a*, **31405***a* with a first end **30410***b*, **31410***b* of a second body **30405***b*, **31405***b* of the rotating subassembly **30400**, **31400**.

In an embodiment, a second spring **30440***b*, **31440***b* may be disposed between the third body **30405***c*, **31504***c* of the rotating subassembly **30400**, **31400** and the body **3005**, **3105** of the drilling mud screen system **3000**, **3100**. See e.g., FIGS. **30**E & **31**D-**31**E. In an embodiment, a second spring **30440***b*, **31440***b* may be disposed in a second seal piston cavity **30445***b*, **31445***b* between the third body **30405***c* of the rotating subassembly **30400**, **31400** and the body **3005**, **3105** of the drilling mud screen system **3000**, **3100** to engage and seal a second end **30415***b*, **31415***b* of the second body **30405***b*, **31405***b* with a first end **30410***c*, **31410***c* of the third body **30405***c*, **31405***c* of the rotating subassembly **30400**, **31400**.

In an embodiment, the body **3005**, **3105** of the drilling mud screen system **3000**, **3100** and the first body **30405***a*, **31405***a* of the rotating subassembly **30400**, **31400** may be sealed via an O-ring. See e.g., FIGS. **30**E & **31**D-**31**E. Any suitable O-ring may be used. For example, suitable O-rings include, but are not limited to, 300 Series O-rings. O-rings are well known in the art.

In an embodiment, the third body **30405***c*, **31405***c* of the rotating subassembly **30400**, **31400** and the body **3005**, **3105** of the drilling mud screen system **3000**, **3100** may be sealed with via an O-ring. See e.g., FIG. **30**E. Any suitable O-ring may be used. For example, suitable O-rings include, but are not limited to, 300 Series O-rings. O-rings are well known in the art.

In an embodiment, the second end **30415***a*, **31415***a* of the first body **30405***a*, **31405***a* of the rotating subassembly **30400**, **31400** has a first seal face **30450***a*, **31450***a*. See e.g., FIGS. **30**E & **31**E.

In an embodiment, the first end **30410***b*, **31410***b* of the second body **30405***b*, **31405***b* of the rotating subassembly **30400**, **31400** has a second seal face **30450***b*, **31450***b*. See e.g., FIGS. **30**E & **31**C-**31**E.

In an embodiment, the first seal face **30450***a*, **31450***a* and the second seal face **30450***b*, **31450***b* may have any suitable shapes to form a seal. For example, suitable shapes may be mating concave and convex surfaces, mating concave and convex surfaces similar to a ball valve, and combinations and variations thereof. In an embodiment, the first seal face **30450***a*, **31450***a* may be concave; and the second seal face **30450***b*, **31450***b* may be convex.

In an embodiment, the second end **30415***b*, **31415***b* of the second body **30405***b*, **31405***b* of the rotating subassembly **3000**, **3100** has a third seal face **30450***c*, **314050***c*. See e.g., FIGS. **30**E & **31**D **10077111***n* an embodiment, the first end **30410***c*, **314010***c* of the third body **30405***c*, **31405***c* of the rotating subassembly **30400**, **31400** has a fourth seal face **30450***d*, **31450***d*. See e.g., FIGS. **30**E & **31**C-**31**E.

In an embodiment, the third seal face **30450***c*, **31450***c* and the fourth seal face **30450***d*, **31450***d* may have any suitable shapes to form a seal. For example, suitable shapes may be mating concave and convex surfaces, mating concave and convex surfaces similar to a ball valve, and combinations and variations thereof. In an embodiment, the third seal face **30450***c*, **31450***c* may be convex; and the fourth seal face **30450***d*, **31450***d* may be concave.

In an embodiment, the first body **30405***a*, **31405***a*, the second body **30405***b*, **31405***b* and the third body **30405***c*, **31405***c* of the rotating subassembly **30400**, **31400** may be constructed of any suitable material. For example, suitable materials include, but are not limited to, any alloy suitable for a drilling mud application. In an embodiment, the first body **30405***a*, **31405***a*, the second body **30405***b*, **31405***b* and the third body **30405***c*, **31405***c* may be constructed of a low alloy steel (e.g., **4140**, **4145**, **4330**), a stainless steel (e.g., 17-4, 304, 316), a super alloy (e.g., Inconel), a titanium alloy (e.g., Ti-6Al-4V, Ti-6Al-6V-2Sn), a copper alloy (e.g., Beryllium Copper), a Cobalt alloy (e.g., Stellite), an Aluminum alloy (e.g., 2024, 6061, 7075) and combination thereof. In an embodiment, the first body **30405***a*, **31405***a*, the second body **30405***b*, **31405***b* and the third body **30405***c*, **31405***c* may be constructed of an American Iron and Steel Industry (AISI) **4130/75***k* yield or equivalent material. In an embodiment, the inner surface of the first body **30405***a*, **31405***a*, the inner surface of the second body **30405***b*, **31405***b* and the inner surface of the third body **30405***c*, **31405***c* may be unpainted. In an embodiment, the outer surface of the first body **30405***a*, **31405***a*, the outer surface of the second body **30405***b*, **31405***b* and the outer surface of the third body **30405***c*, **31405***c* may be painted.

Camming Seal Separator

In an embodiment, a camming seal separator **30200**, **31200** may be used to prevent unnecessary wear to the seal faces **30450***a*, **30450***b*, **30450***c*, **30450***d*, **31450***a*, **31450***b*, **31450***c*, **31450***d*, as discussed below.

In an embodiment, the camming seal separator **30200**, **31200** may be any suitable seal separator. For example, a suitable camming seal separator includes, but is not limited to, a face-rolling camming mechanism, a push-rod camming mechanism, and combinations and variations thereof. In an embodiment, the camming seal separator **30200**, **31200** has a face-roller camming mechanism. See e.g., FIGS. **30**C-**30**D & **31**C-**31**E.

Face-Rolling Camming Mechanism

FIG. **30**C illustrates an upper, left perspective view of the drilling mud screen system **3000** of FIG. **30**A, showing a rotating subassembly **30400** in the open position; and FIG. **30**D illustrates a detail view of a rotating subassembly **30400** of FIGS. **30**A-**30**C.

FIG. **31**C illustrates a left perspective view of the drilling mud screen system **3100** of FIG. **30**A, showing a rotating subassembly **31400** in the open position; FIG. **31**D illustrates a partial cross-sectional view of the drilling mud screen system **3100** of FIG. **31**A, showing the rotating subassembly **31400** in the closed position; and FIG. **31**E illustrates a partial cross-sectional view of the drilling mud screen system **3100** of FIGS. **31**A and **31**C-**31**D, showing the rotating subassembly **31400** in the open position.

As shown in FIGS. **30**C-**30**D and **31**C-**31**E, the rotating subassembly **30400**, **31400** has a first face-rolling camming mechanism **30200***a*, **31200***a* and a second face-rolling camming mechanism **30200***b*, **31200***b*.

In an embodiment, the first face-rolling camming mechanism **30200***a*, **31200***a* has a first cam roller **30205***a*, **31205***a*, a first roller bracket **30210***a*, **31210***a* and a first cam track **30215***a*, **31215***a*.

In an embodiment, the second face-rolling camming mechanism **30200***b*, **31200***b* has a second cam roller **30205***b*, **31205***b*, a second roller bracket **30210***b*, **31210***b*, and a second cam track **30215***b*, **31215***b*.

In an embodiment, the first cam roller **30205***a*, **31205***a* may be attached to a second end **30415***a*, **31415***a* of the first body **30405***a*, **31405***a* of the rotating subassembly **30400**, **31400**. In an embodiment, the first cam roller **30205***a*, **31205***a* may be attached to a second end **30415***a*, **31415***a* of the first body **30405***a*, **31405***a* of the rotating subassembly **3040**, **31400** via fasteners. Any suitable fastener may be used for the first cam roller **30205***a*, **31205***a* and the first body **30405***a*, **31405***a* of the rotating subassembly **30400**, **31400**. For example, suitable fasteners include, but are not limited to, bolts, screws, pins, rivets, welds, and combinations thereof. Fasteners are well known in the art.

In an embodiment, the first roller bracket **30210***a*, **31210***a* may be attached to a second end **30415***b*, **31415***b* of the first body **30405***a*, **31405***a* of the rotating subassembly **30400**, **31400**. In an embodiment, the first roller bracket **30210***a*, **31210***a* may be attached to a second end **30415***b*, **31415***b* of the first body **30405***a*, **31405***a* of the rotating subassembly **30400**, **31400** via fasteners. Any suitable fastener may be used for the first roller bracket **30210***a*, **31210***a* and the first body **30405***a*, **31405***a* of the rotating subassembly **30400**, **31400**. For example, suitable fasteners include, but are not limited to, bolts, screws, pins, rivets, welds, and combinations thereof. Fasteners are well known in the art.

In an embodiment, the first cam roller **30205***a*, **31205***a* may be attached to the first roller bracket **30210***a*, **31210***a*. In an embodiment, the first cam roller **30205***a*, **31205***a* may be attached to the first roller bracket **30210***a*, **31210***a* via fasteners. Any suitable fastener may be used for the first cam roller **30205***a*, **31205***a* and the first roller bracket **30210***a*, **31210***a*. For example, suitable fasteners include, but are not limited to, bolts, screws, pins, rivets, welds, and combinations thereof. Fasteners are well known in the art.

In an embodiment, the first cam track **30215***a*, **31215***a* may be attached to a first end **30410***b*, **31410***b* of the second body **30405***b*, **31405***b* of the rotating subassembly **30400**, **31400**. In an embodiment, the first cam track **30215***a*,

31215*a* may be attached to a first end **30410***b*, **31410***b* of the second body **30405***b*, **31405***b* of the rotating subassembly **30400**, **31400** via fasteners. Any suitable fasteners may be used for the first cam track **30215***a*, **31215***a* and the second body **30405***b*, **31405***b* of the rotating subassembly **30400**, **31400**. For example, suitable fasteners include, but are not limited to, bolts, screws, pins, rivets, welds, and combinations thereof. Fasteners are well known in the art.

In a closed position for the rotating subassembly **30400**, **31400**, the first cam roller **30205***a*, **31205***a* may be disposed in a first recessed portion of the first cam track **30215***a*, **31215***a* allowing the second end **30415***a*, **31415***a* of the first body **30405***a*, **31405***a* of the rotating subassembly **30400**, **31400** to close against the first end **3010***b*, **3110***b* of the second body **30405***b*, **31405***b* of the rotating subassembly **30400**, **31400** and to form a first seal between seal faces **30450***a*, **30450***b*, **31450***a*, **31450***b*.

As the rotating subassembly **30400**, **31400** rotates, the first cam roller **30205***a*, **31205***a* travels along the first cam track **30215***a*, **31215***a* and collapses the first body **30405***a*, **31405***a* of the rotating subassembly **30400**, **31400** into the body **3005**, **3105** to prevent unnecessary wear to the seal faces **30450***a*, **30450***b*, **31450***a*, **31450***b*.

In an embodiment, the second cam roller **30205***b*, **31205***b* may be attached to a second end **30415***b*, **31415***b* of the second body **30405***b*, **31405***b* of the rotating subassembly **30400**, **31400**. In an embodiment, the second cam roller **30205***b*, **31205***b* may be attached to a second end **30415***b*, **31415***b* of the second body **30405***b*, **31405***b* of the rotating subassembly **30400**, **31400** via fasteners. Any suitable fastener may be used for the second cam roller **30205***b*, **31205***b* and the second body **30405***b*, **31405***b* of the rotating subassembly **30400**, **31400**. For example, suitable fasteners include, but are not limited to, bolts, screws, pins, rivets, welds, and combinations thereof. Fasteners are well known in the art.

In an embodiment, the second roller bracket **30210***b*, **31210***b* may be attached to a first end **30410***c*, **31410***c* of the third body **30405***c*, **31405***c* of the rotating subassembly **30400**, **31400**. In an embodiment, the second roller bracket **30210***b*, **31210***b* may be attached to a first end **30410***c*, **31410***c* of the third body **30405***c*, **31405***c* of the rotating subassembly **30400**, **31400** via fasteners. Any suitable fastener may be used for the second roller bracket **30210***b*, **31210***b* and the third body **30405***c*, **31405***c* of the rotating subassembly **30400**, **31400**. For example, suitable fasteners include, but are not limited to, bolts, screws, pins, rivets, welds, and combinations thereof. Fasteners are well known in the art.

In an embodiment, the second cam roller **30205***b*, **31205***b* may be attached to the second roller bracket **30210***b*, **31210***b*. In an embodiment, the second cam roller **30205***b*, **31205***b* may be attached to the second roller bracket **30210***b*, **31210***b* via fasteners. Any suitable fastener may be used for the second cam roller **30205***b*, **31205***b* and the second roller bracket **30210***b*, **31210***b*. For example, suitable fasteners include, but are not limited to, bolts, screws, pins, rivets, welds, and combinations thereof. Fasteners are well known in the art.

In an embodiment, the second cam track **30215***b*, **31215***b* may be attached to a second end **30415***b*, **31415***b* of the second body **30405***b*, **31405***b* of the rotating subassembly **30400**, **31400**. In an embodiment, the second cam track **30215***b*, **31215***b* may be attached to a second end **30415***b*, **31415***b* of the second body **30405***b*, **31405***b* of the rotating subassembly **30400**, **31400** via fasteners. Any suitable fasteners may be used for the second cam track **30215***b*, **31215***b* and the second body **30405***b*, **31405***b* of the rotating subassembly **30400**, **31400**. For example, suitable fasteners include, but are not limited to, bolts, screws, pins, rivets, welds, and combinations thereof. Fasteners are well known in the art.

In a closed position for the rotating subassembly **30400**, **31400**, the second cam roller **30205***b*, **31205***b* may be disposed in a second recessed portion of the second cam track **30215***b*, **31215***b* allowing the second end **30415***b*, **31415***b* of the second body **30405***b*, **31405***b* of the rotating subassembly **30400**, **31400** to close against the first end **30410***c*, **31410***c* of the third body **30405***c*, **31405***c* of the rotating subassembly **30400**, **31400** to form a second seal between seal faces **30450***c*, **30450***d*, **31450***c*, **31450***d*.

As the rotating subassembly **30400**, **31400** rotates, the second cam roller **30205***b*, **31205***b* travels along the second cam track **30215***b*, **31215***b* and collapses the third body **30405***c*, **31405***c* of the rotating subassembly **30400**, **31400** into the body **3005**, **3105** to prevent unnecessary wear to the seal faces **30450***c*, **30450***d*, **31450***c*, **31450***d*.

Body with Push-Rod Camming Mechanism

FIG. **32**A illustrates an upper, left perspective view of an exemplary drilling mud screen system **3200** with a camming seal separator **32300** having a push-rod camming mechanism **32300***a* according to an embodiment of the present invention, showing a rotating subassembly **32400** in a closed position; FIG. **32**B illustrates the upper, left perspective view of the drilling mud screen system **3200** of FIG. **32**A, showing the rotating subassembly **32400** in an open position; and FIG. **32**C illustrates a cross-sectional view of the drilling mud screen system **3200** of FIG. **32**A, showing the rotating subassembly **32400** in a closed position.

FIG. **33**A illustrates a left perspective view of an exemplary drilling mud screen system **3300** with camming seal separator **33300** having a push-rod camming mechanism **33300***a* according to an embodiment of the present invention, showing a rotating subassembly **33400** in a closed position; FIG. **33**B illustrates a left perspective view of the drilling mud screen system **3300** of FIG. **33**A, showing the rotating subassembly **33400** in an open position; FIG. **33**C illustrates a detail view of the push-rod camming mechanism **33300***a* of FIG. **33**A, showing the rotating subassembly **33400** in a closed position; FIG. **33**D illustrates a detail view of the push-rod camming mechanism **33300***a* of FIGS. **33**A and **33**C, showing the rotating subassembly **33400** in the open position; and FIG. **33**E illustrates a partial cross-sectional view of the drilling mud screen system **3300** of FIG. **33**A, showing the rotating subassembly **33400** in the closed position.

As shown in FIGS. **32**A-**32**D and **33**A-**33**E, the drilling mud screen system **3200**, **3300** has a body **3205**, **3305** having a first end **3210**, **3310** and a second end **3215**, **3315**, an inlet **3220**, **3320** and an outlet **3225**, **3325**, and drilling mud screen access port **3230**, **3330**.

In an embodiment, the drilling mud screen system **3200**, **3300** has a drilling mud screen **3240**, **3340** fluidly connected to and disposed between the drilling mud inlet **3220**, **3320** and the drilling outlet **3225**, **3325**.

In an embodiment, the body **3205**, **3305** has a first portion **3205***a*, **3305***a*, a second portion **3205***b*, **3305***b* and a third portion **3205***c*, **3305***c*. In an embodiment, the first portion **3205***a*, **3305***a* of the body **3205**, **3305** is an inlet portion. In an embodiment, the second portion **3205***b*, **3305***b* of the body **3205**, **3305** is a rotating subassembly/drilling mud screen portion. In an embodiment, the third portion **3205***c*, **3305***c* of the body **3205**, **3305** is an outlet portion.

In an embodiment, the first portion **3205***a*, **3305***a* and the third portion **3205***c*, **3305***c* may be any suitable shape. For example, suitable shapes include, but are not limited to, a cone, a cylinder, a rectangular prism (e.g., cubic, cuboid), a pentagonal prism, a sphere, a spheroid, a triangular prism, and combinations and/or portions thereof. In an embodiment, the first portion **3205***a*, **3305***a* and the third portion **3205***c*, **3305***c* may be a cylinder or a combination of cylinders.

In an embodiment, the first portion **3205***a*, **3305***a*, and the third portion **3205***c*, **3305***c* may have any suitable inner diameter or dimension. For example, a suitable inner diameter for the first portion **3205***a*, **3305***a* and the third portion **3205***c*, **3305***c* may be from about 2-inches to about 5-inches, and any range or value there between. In an embodiment, the inner diameter of the first portion **3205***a*, **3305***a* and the third portion **3205***c*, **3305***c* may be about 4.06-inches.

In an embodiment, the second portion **3205***b*, **3305***b* may be any suitable shape. For example, suitable shapes include, but are not limited to, a cone, a cylinder, a rectangular prism (e.g., cubic, cuboid), a pentagonal prism, a sphere, a spheroid, a triangular prism, and combinations and/or portions thereof. In an embodiment, the second portion **3205***b*, **3305***b* may be a rectangular prism with open opposing sides. See e.g., FIGS. **30**A-**30**C & **31**A-**31**C (open front and rear sides).

In an embodiment, the second portion **3205***b*, **3305***b* may have any suitable inner diameter or dimension. For example, a suitable inner diameter for the second portion **3205***b*, **3305***b* may be from about 6-inches to about 14-inches, and any range or value there between. In an embodiment, the inner diameter for the second portion **3205***b*, **3305***b* may be about 10-inches.

For example, a suitable inner dimension for the second portion **3205***b*, **3305***b* may be from about 6-inches to about 14-inches square, and any range or value there between. In an embodiment, the inner dimension for the second portion **3205***b*, **3305***b* may be about 10-inches square.

In an embodiment, a drilling mud inlet **3220**, **3320** of the drilling mud screen system **3200**, **3300** may be fluidly connected to a high-pressure outlet of a drilling mud pump via a connection. In an embodiment, a drilling mud outlet **3225**, **3325** of the drilling mud screen system **3200**, **3300** may be fluidly connected to an inlet of a vibrator hose to a standpipe via a connection.

Alternatively, the drilling mud screen system **3200**, **3300** may be installed between an outlet of the vibrator hose and an inlet of the standpipe, or at any point in the standpipe via a connection.

In an embodiment, the drilling mud inlet **3220**, **3320** may be fluidly connected to, for example, an outlet to a drilling mud pump via a connection; and the drilling mud outlet **3225**, **3325** may be fluidly connected to, for example, an inlet to a vibrator hose via a connection. Any suitable connection may be used for the drilling mud inlet and the drilling mud outlet. For example, suitable connections include, but are not limited to, pipe fittings and welds. Connections are well known in the art. In an embodiment, the drilling mud inlet **3220**, **3320** may be fluidly connected to, for example, an outlet to a drilling mud pump via a weld; and the drilling mud outlet **3225**, **3325** may be fluidly connected to, for example, an inlet to a vibrator hose via a weld.

In an embodiment, the body **3205**, **3305** of the drilling mud screen system **3200**, **3300** may be constructed of any suitable material. For example, suitable materials include, but are not limited to, any alloy suitable for a drilling mud application. In an embodiment, the body **3205**, **3305** may be constructed of a low alloy steel (e.g., **4140**, **4145**, **4330**), a stainless steel (e.g., 17-4, 304, 316), a super alloy (e.g., Inconel), a titanium alloy (e.g., Ti-6Al-4V, Ti-6Al-6V-2Sn), a copper alloy (e.g., Beryllium Copper), a Cobalt alloy (e.g., Stellite), an Aluminum alloy (e.g., 2024, 6061, 7075), and combinations thereof. In an embodiment, the body **3205**, **3305** may be constructed of an American Iron and Steel Industry (AISI) **4130**/**75***k* yield or equivalent material. In an embodiment, the inner surface of the body **3205**, **3305** may be unpainted. In an embodiment, the outer surface of the body **3205**, **3305** may be painted.

Pivot Subassembly

As shown in FIGS. **32**A-**32**D and **33**A-**33**E, the second portion **3205***b*, **3305***b* of the body **3205**, **3305** and/or the rotating subassembly **32400**, **33400** has a first shaft stud **3275**, **3375**, a second shaft stud **3280**, **3380**, a pivot shaft **3285**, **3385**, and a pivot drive **3290**, **3390**.

In an embodiment, the rotating subassembly **32400**, **33400** may be retained in the second portion **3205***b*, **3305***b* of the body **3205**, **3305** via the first shaft stud **3275**, **3375** and the second shaft stud **3280**, **3380**. See e.g., FIGS. **32**D & **33**E. In an embodiment, the rotating subassembly **32400**, **33400** may be retained in the second portion **3205***b*, **3305***b* of the body **3205**, **3305** via the first shaft stud **3275**, **3375** and the second shaft stud **3280**, **3380** such that the rotating subassembly **32400**, **33400** may rotate with respect to the second portion **3205***b*, **3305***b* of the body **3205**, **3305**.

In an embodiment, the first shaft stud **3275**, **3375** or the second shaft stud **3280**, **3380** may be attached to the pivot drive **3290**, **3390** via the pivot shaft **3285**, **3385**.

In an embodiment, the pivot drive **3290**, **3390** may be any suitable means of leverage to rotate the rotating subassembly. For example suitable means of leverage include, but are not limited to a handle, a gear box, or other driving means. In an embodiment, the pivot drive **3290**, **3390** has a handle. In an embodiment, the pivot drive **3290**, **3390** has a gear box.

Rotating Subassembly

FIG. **32**C illustrates a cross-sectional view of the drilling mud screen system **3200** of FIG. **32**A, showing the rotating subassembly **32400** in a closed position.

FIG. **33**E illustrates a partial cross-sectional view of the drilling mud screen system **3300** of FIG. **33**A, showing the rotating subassembly **33400** in the closed position.

As shown in FIGS. **32**C and **33**E, the rotating subassembly **32400**, **33400** has a first body **32405***a*, **33405***a* having a first end **32410***a*, **33410***a*, a second end **32415***a*, **33415***a*, a first drilling mud inlet **32420***a*, **33420***a* and a first drilling mud outlet **32425***a*, **33425***a*, a second body **32405***b*, **33405***b* having a first end **32410***b*, **33410***b*, a second end **32415***b*, **33415***b*, a second drilling mud inlet **32420***b*, **33420***b* and a second drilling mud outlet **32425***b*, **33425***b*, and a third body **32405***c*, **33405***c* having a first end **32410***c*, **33410***c*, a second end **32415***c*, **33415***c*, a third drilling mud inlet **32420***c*, **33420***c* and a third drilling mud outlet **32425***c*, **33425***c*.

In an embodiment, the rotating subassembly **32400**, **33400** has a drilling mud screen **3240**, **3340** fluidly connected to and disposed between the second drilling mud inlet **32420***b*, **33420***b* and the second drilling outlet **32425***b*, **33425***b*.

In an embodiment, the first body **32405***a*, **33405***a* is an inlet portion. In an embodiment, the second body **32405***b*, **33405***b* is a rotating subassembly/drilling mud screen portion. In an embodiment, the third body **32405***c*, **32405***c* is an outlet portion.

In an embodiment, the first body **32405***a*, **33405***a* and the third body **32405***c*, **33405***c* may be any suitable shape. For

example, suitable shapes include, but are not limited to, a cone, a cylinder, a rectangular prism (e.g., cubic, cuboid), a pentagonal prism, a sphere, a spheroid, a triangular prism, and combinations and/or portions thereof. In an embodiment, the first body **32405***a*, **33405***a* and the third body **32405***c*, **33405***c* may be a cylinder or a combination of cylinders. See e.g., FIGS. **32**C & **33**E-**33**F.

In an embodiment, the first body **32405***a*, **33405***a* and the third body **32405***c*, **33405***c* may have any suitable inner diameter or dimension. For example, a suitable inner diameter for the first body **32405***a*, **33405***a* and the third body **32405***c*, **33405***c* may be from about 2-inches to about 5-inches, and any range or value there between. In an embodiment, the inner diameter of the first body **32405***a*, **33405***a* and the third body **32405***c*, **33405***c* may be about 4.06-inches.

In an embodiment, the second body **32405***b*, **33405***b* may be any suitable shape. For example, suitable shapes include, but are not limited to, a cone, a cylinder, a rectangular prism (e.g., cubic, cuboid), a pentagonal prism, a sphere, a spheroid, a triangular prism, and combinations and/or portions thereof. In an embodiment, the second body **32405***b*, **33405***b* may be a combination of cylinders. See e.g., FIGS. **32**C & **33**E-**33**F.

In an embodiment, the second body **32405***b*, **33405***b* may have any suitable inner diameter or dimension. For example, a suitable inner diameter for the second body **32405***b*, **33405***b* may be from about 4-inches to about 10-inches, and any range or value there between. In an embodiment, the inner diameter for the second body **32405***b*, **33405***b* may be about 6-inches.

In an embodiment, the rotating subassembly **32400**, **33400** has a drilling mud screen **3240**, **3340** fluidly connected to and disposed between the second drilling mud inlet **32420***b*, **33420***b* and the second drilling outlet **32425***b*, **33425***b*.

In an embodiment, an internal drilling mud outlet **3225***a*, **3325***a* of the body **3205**, **3305** of the drilling mud screen system **3200**, **3300** may be fluidly connected to the first drilling mud inlet **32420***a*, **33420***a* of the first body **32405***a*, **33405***a* of the rotating subassembly **32400**, **33400**.

In an embodiment, the first drilling mud outlet **32425***a*, **33425***a* of the first body **32405***a*, **33405***a* of the rotating subassembly **32400**, **33400** may be fluidly connected to the second drilling mud inlet **32420***b*, **33420***b* of the second body **32405***b*, **33405***b* of the rotating subassembly **32400**, **33400**.

In an embodiment, the second drilling mud outlet **32425***b*, **33425***b* of the second body **32405***b*, **33405***b* of the rotating subassembly **32400**, **33400** may be fluidly connected to the third drilling mud inlet **32420***c*, **33420***c* of the third body **32405***c*, **33405***c* of the rotating subassembly **32400**, **33400**.

In an embodiment, the third drilling mud outlet **32425***c*, **33425***c* of the third body **32405***c*, **33405***c* of the rotating subassembly **32400**, **33400** may be fluidly connected to an internal drilling mud inlet **3220***a*, **3320***a* of the body **3205**, **3305** of the drilling mud screen system **3200**, **3300**.

In an embodiment, a first guard ring **32430***a*, **33430***a* may be disposed between the body **3205**, **3305** of the drilling mud screen system **3200**, **3300** and the first end **32410***a*, **33410***a* of the first body **32405***a*, **33405***a* of the rotating subassembly **32400**, **33400**. See e.g., FIGS. **32**D & **33**E-**33**F. In an embodiment, a first guard ring **32430***a*, **33430***a* may be disposed in a first piston cavity **32435***a*, **33435***a* between the body **3205**, **3305** of the drilling mud screen system **3200**, **3300** and the first end **32410***a*, **33410***a* of the first body **32405***a*, **33405***a* of the rotating subassembly **32400**, **33400** to prevent buildup and compaction of debris in the first piston cavity **32435***a*, **33435***a*.

In an embodiment, a second guard ring **32430***b*, **33430***b* may be disposed between the second end **32415***c*, **33415***c* of the third body **32405***c*, **33405***c* of the rotating subassembly **32400**, **33400** and the body **3205**, **3305** of the drilling mud screen system **3200**, **3300**. See e.g., FIGS. **32**D & **33**E-**33**F. In an embodiment, a second guard ring **32430***b*, **33430***b* may be disposed in a second piston cavity **32435***b*, **33435***b* between the second end **32415***c*, **33415***c* of the third body **32405***c*, **33405***c* of the rotating subassembly **32400**, **33400** and the body **3205**, **3305** of the drilling mud screen system **3200**, **3300** to prevent buildup and compaction of debris in the second piston cavity **32435***b*, **33435***b*.

In an embodiment, the first guard ring **32430***a*, **33430***a* and the second guard ring **32430***b*, **33430***b* may be constructed of any suitable compressible material to prevent buildup and compaction of debris in first piston cavity **32435***a*, **33435***a* and the second piston cavity **32435***b*, **33435***b*, respectively.

In an embodiment, a first spring **32440***a*, **33440***a* may be disposed between the body **3205**, **3305** of the drilling mud screen system **3200**, **3300** and the first body **32405***a*, **33405***a* of the rotating subassembly **32400**, **33400**. See e.g., FIGS. **32**D & **33**E-**33**F. In an embodiment, a first spring **32440***a*, **33440***a* may be disposed in a first seal piston cavity **32445***a*, **33445***a* between the body **3205**, **3305** of the drilling mud screen system **3200**, **3300** and the first body **32405***a*, **33405***a* of the rotating subassembly **32400**, **33400** to engage and seal a second end **32415***a*, **33415***a* of the first body **32405***a*, **33405***a* with a first end **32410***b*, **33410***b* of a second body **32405***b*, **33405***b* of the rotating subassembly **32400**, **33400**.

In an embodiment, a second spring **32440***b*, **33440***b* may be disposed between the third body **32405***c*, **33405***c* of the rotating subassembly **32400**, **33400** and the body **3205**, **3305** of the drilling mud screen system **3200**, **3300**. See e.g., FIGS. **32**D & **33**E. In an embodiment, a second spring **32440***b*, **33440***b* may be disposed in a second seal piston cavity **32445***b*, **33445***b* between the third body **32405***c*, **33405***c* of the rotating subassembly **32400**, **33400** and the body **3205**, **3305** of the drilling mud screen system **3200**, **3300** to engage and seal a second end **32415***b*, **33415***b* of the second body **32405***b*, **33405***b* with a first end **32410***c*, **33410***c* of the third body **32405***c*, **33405***c* of the rotating subassembly **32400**, **33400**.

In an embodiment, the body **3205**, **3305** of the drilling mud screen system **3200**, **3300** and the first body **32405***a*, **33405***a* of the rotating subassembly **32400**, **33400** may be sealed via an O-ring. See e.g., FIGS. **32**D & **33**E-**33**F. Any suitable O-ring may be used. For example, suitable O-rings include, but are not limited to, 300 Series O-rings. O-rings are well known in the art.

In an embodiment, the third body **32405***c*, **33405***c* of the rotating subassembly **32400**, **33400** and the body **3205**, **3305** of the drilling mud screen system **3200**, **3300** may be sealed with via an O-ring. See e.g., FIG. **32**D. Any suitable O-ring may be used. For example, suitable O-rings include, but are not limited to, 300 Series O-rings. O-rings are well known in the art.

In an embodiment, the second end **32415***a*, **33415***a* of the first body **32405***a*, **33405***a* of the rotating subassembly **32400**, **33400** has a first seal face **32450***a*, **33450***a*. See e.g., FIGS. **32**D & **33**E-**33**F.

In an embodiment, the first end **32410***b*, **33410***b* of the second body **32405***b*, **33405***b* of the rotating subassembly **32400**, **33400** has a second seal face **32450***b*, **33450***b*. See e.g., FIGS. **32**D & **33**E-**33**F.

In an embodiment, the first seal face **32450***a*, **33450***a* and the second seal face **32450***b*, **33450***b* may have any suitable shapes to form a seal. For example, suitable shapes may be mating concave and convex surfaces, mating concave and convex surfaces similar to a ball valve, and combinations and variations thereof. In an embodiment, the first seal face **32450***a*, **33450***a* may be concave; and the second seal face **32450***b*, **33450***b* may be convex.

In an embodiment, the second end **32415***b*, **33415***b* of the second body **32405***b*, **33405***b* of the rotating subassembly **3200**, **3300** has a third seal face **32450***c*, **334050***c*. See e.g., FIGS. **32**D & **33**E.

In an embodiment, the first end **324010***c*, **334010***c* of the third body **32405***c*, **33405***c* of the rotating subassembly **32400**, **33400** has a fourth seal face **32450***d*, **33450***d*. See e.g., FIGS. **32**D & **33**E.

In an embodiment, the third seal face **32450***c*, **33450***c* and the fourth seal face **32450***d*, **33450***d* may have any suitable shapes to form a seal. For example, suitable shapes may be mating concave and convex surfaces, mating concave and convex surfaces similar to a ball valve, and combinations and variations thereof. In an embodiment, the third seal face **32450***c*, **33450***c* may be convex; and the fourth seal face **32450***d*, **33450***d* may be concave.

In an embodiment, the first body **32405***a*, **32405***a*, the second body **32405***b*, **33405***b* and the third body **32405***c*, **33405***c* of the rotating subassembly **32400**, **33400** may be constructed of any suitable material. For example, suitable materials include, but are not limited to, any alloy suitable for a drilling mud application. In an embodiment, the first body **32405***a*, **33405***a*, the second body **32405***b*, **33405***b* and the third body **32405***c*, **33405***c* may be constructed of a low alloy steel (e.g., **4140**, **4145**, **4330**), a stainless steel (e.g., 17-4, 304, 316), a super alloy (e.g., Inconel), a titanium alloy (e.g., Ti-6Al-4V, Ti-6Al-6V-2Sn), a copper alloy (e.g., Beryllium Copper), a Cobalt alloy (e.g., Stellite), an Aluminum alloy (e.g., 2024, 6061, 7075) and combination thereof. In an embodiment, the first body **32405***a*, **33405***a*, the second body **32405***b*, **33405***b* and the third body **32405***c*, **33405***c* may be constructed of an American Iron and Steel Industry (AISI) **4130/75***k* yield or equivalent material. In an embodiment, the inner surface of the first body **32405***a*, **33405***a*, the inner surface of the second body **32405***b*, **33405***b* and the inner surface of the third body **32405***c*, **33405***c* may be unpainted. In an embodiment, the outer surface of the first body **32405***a*, **33405***a*, the outer surface of the second body **32405***b*, **33405***b* and the outer surface of the third body **32405***c*, **33405***c* may be painted.

Camming Seal Separator

In an embodiment, a camming seal separator **32300**, **33300** may be used to prevent unnecessary wear to the seal faces **32450***a*, **32450***b*, **32450***c*, **32450***d*, **33450***a*, **33450***b*, **33450***c*, **33450***d*, as discussed below.

In an embodiment, the camming seal separator **32300**, **33300** may be any suitable seal separator. For example, a suitable camming seal separator includes, but is not limited to, a face-rolling camming mechanism, a push-rod camming mechanism, and combinations and variations thereof. In an embodiment, the camming seal separator **32300**, **33300** has a push-rod camming mechanism. See e.g., FIGS. **32**A & **33**C-**33**F.

Push-Rod Camming Mechanism

FIG. **32**A illustrates an upper, left perspective view of an exemplary drilling mud screen system **3200** with a camming seal separator **32300** having a push-rod camming mechanism **32300***a* according to an embodiment of the present invention, showing a rotating subassembly **32400** in a closed position; and FIG. **32**B illustrates the upper, left perspective view of the drilling mud screen system **3200** of FIG. **32**A, showing the rotating subassembly **32400** in an open position.

FIG. **33**C illustrates a detail view of the push-rod camming mechanism **33300***a* of FIG. **33**A, showing the rotating subassembly **33400** in a closed position; FIG. **33**D illustrates a detail view of the push-rod camming mechanism **33300***a* of FIGS. **33**A and **33**C, showing the rotating subassembly **33400** in the open position; FIG. **33**E illustrates a partial cross-sectional view of the drilling mud screen system **3300** of FIG. **33**A, showing the rotating subassembly **33400** in the closed position; and FIG. **33**F illustrates a detail view of the push-rod camming mechanism **33300***a* of FIG. **33**A, showing the rotating subassembly **33400** in the closed position.

As shown in FIGS. **32**A-**32**B and **33**C-**33**F, the body **3205**, **3305** has a first push-rod camming mechanism **32300***a*, **33300***a* and a second push-rod camming mechanism **32300***b*, **33300***b*.

In an embodiment, the first push-rod camming mechanism **32300***a*, **33300***a* has a first pivot pin **32305***a*, **33305***a*, a first push rod **32310***a*, **33310***a*, a first guide block **32315***a*, **33315***a*, a first spring **32320***a*, **33320***a*, a first cam roller **32325***a*, **33325***a* and a cam **32330**, **33330**.

In an embodiment, the second push-rod camming mechanism **32300***b*, **33300***b* has a second pivot pin **32305***b*, **33305***b*, a second push rod **32310***b*, **33310***b*, a second guide block **32315***b*, **33315***b*, a second spring **32320***b*, **33320***b*, a second cam roller **32325***b*, **33325***b* and a cam **32330**, **33330**.

In an embodiment, a first end of the first pivot pin **32305***a*, **33305***a* may be attached to the first body **32405***a*, **33405***a* of the rotating subassembly **32400**, **33400** through the first portion **3205***a*, **3305***a* of the body **3205**, **3305**. In an embodiment, a first end of the first pivot pin **32305***a*, **33305***a* may be attached to the first body **32405***a*, **33405***a* of the rotating subassembly **32400**, **33400** through the first portion **3205***a*, **3305***a* of the body **3205**, **3305** via fasteners. Any suitable fasteners may be used for the first pivot pin **32305***a*, **33305***a* and the first body **32405***a*, **33405***a* of the rotating subassembly **32400**, **33400**. For example, suitable fasteners include, but are not limited to, bolts, screws, pins, rivets, welds, and combinations thereof. Fasteners are well known in the art.

In an embodiment, a second end of the first pivot pin **32305***a*, **33305***a* may be attached to a first end of the first push rod **32310***a*, **33310***a*. In an embodiment, a second end of the first pivot pin **32305***a*, **33305***a* may be attached to a first end of the first push rod **32310***a*, **33310***a* via fasteners. Any suitable fasteners may be used for the first pivot pin **32305***a*, **33305***a* and the first push rod **32310***a*, **33310***a*. For example, suitable fasteners include, but are not limited to, bolts, screws, pins, rivets, welds, and combinations thereof. Fasteners are well known in the art.

In an embodiment, a second end of the first push rod **32310***a*, **33310***a* may be attached to a first cam roller **32325***a*, **33325***a*. In an embodiment, a second end of the first push rod **32310***a*, **33310***a* may be attached to a first cam roller **32325***a*, **33325***a* via fasteners. Any suitable fasteners may be used for the first push rod **32310***a*, **33310***a* and the first cam roller **32325***a*, **33325***a*. For example, suitable fasteners include, but are not limited to, bolts, screws, pins, rivets, welds, and combinations thereof. Fasteners are well known in the art.

In an embodiment, the first cam roller **32325***a*, **33325***a* may travel along a surface of the cam **32330**, **33330**.

In an embodiment, the cam **32330**, **33330** may be attached to the pivot drive **3290**, **3390**. In an embodiment, the cam **32330**, **33330** may be attached to the pivot drive **3290**, **3390**

via fasteners. Any suitable fasteners may be used for the cam **32330**, **33330** and the pivot drive **3290**, **3390**. For example, suitable fasteners include, but are not limited to, bolts, screws, pins, rivets, welds, and combinations thereof. Fasteners are well known in the art.

In an embodiment, the cam **32330**, **33330** may be any suitable shape. For example, suitable shapes include, but are not limited to, an "∞" shape, an "8" shape, a "0" shape, an "O" shape, and combinations and/or portions thereof. In an embodiment, the cam **32330**, **33330** may be a double lobed shape. See e.g., FIGS. **33**C-**33**D.

In an embodiment, the first push rod **32310***a*, **33310***a* may be any suitable shape. For example, suitable shapes include, but are not limited to, a cross shape, a "T" shape, a "Y" shape, and combinations and/or portions thereof. In an embodiment, the second body **32310***b*, **33310***b* may be a cross shape. See e.g., FIGS. **32**A-**32**B & **33**A-**33**D.

In an embodiment, a first guide block **32315***a*, **33315***a* may be attached to the second portion **3205***b*, **3305***b* of the body **3205**, **3305**. In an embodiment, a first guide block **32315***a*, **33315***a* may be attached to the second portion **3205***b*, **3305***b* of the body **3205**, **3305** via fasteners. Any suitable fasteners may be used for the first guide block **32315***a*, **33315***a* and the second portion **3205***b*, **3305***b* of the body **3205**, **3305**. For example, suitable fasteners include, but are not limited to, bolts, screws, pins, rivets, welds, and combinations thereof. Fasteners are well known in the art.

In an embodiment, the first push rod **32310***a*, **33310***a* may pass through the first guide block **32315***a*, **33315***a*.

In an embodiment, a first end of the first spring **32320***a*, **33320***a* may be attached to the first guide block **32315***a*, **33315***a*. In an embodiment, a first end of the first spring **32320***a*, **33320***a* may be attached to the first guide block **32315***a*, **33315***a* via fasteners. Any suitable fastener may be used for the first spring **32320***a*, **33320***a* and the first guide block **32315***a*, **33315***a*. For example, suitable fasteners include, but are not limited to, bolts, screws, pins, rivets, welds, and combinations thereof. Fasteners are well known in the art.

In an embodiment, a second end of the first spring **32320***a*, **33320***a* may be attached to the first push rod **32310***a*, **33310***a*. In an embodiment, a second end of the first spring **32320***a*, **33320***a* may be attached to the first push rod **32310***a*, **33310***a* via fasteners. Any suitable fastener may be used for the first spring **32320***a*, **33320***a* and the first push rod **32310***a*, **33310***a*. For example, suitable fasteners include, but are not limited to, bolts, screws, pins, rivets, welds, and combinations thereof. Fasteners are well known in the art.

In a closed position for the rotating subassembly **32400**, **33400**, the first cam roller **32325***a*, **33325***a* may be disposed in a most recessed portion of the cam **32330**, **33330** allowing the second end **32415***a*, **32415***a* of the first body **32405***a*, **33405***a* of the rotating subassembly **32400**, **33400** to close against the first end **32410***b*, **33410***b* of the second body **32405***b*, **32405***b* of the rotating subassembly **32400**, **33400** to form a first seal between seal faces **32450***a*, **32450***b*, **33450***a*, **33450***b*.

As the pivot shaft **3285**, **3385** and the cam **32330**, **33330** (and rotating subassembly **32400**, **33400**) rotates, the first cam roller **32325***a*, **33325***a* travels along the cam **32330**, **33330** and collapses the first body **32405***a*, **33405***a* of the rotating subassembly **32400**, **33400** into the body **3205**, **3305** to prevent unnecessary wear to the seal faces **32450***a*, **32450***b*, **33450***a*, **33450***b*.

In an embodiment, the cam **32330**, **33330** may be sized and shaped such that the timing of allowing the second end **32415***a*, **32415***a* of the first body **32405***a*, **33405***a* of the rotating subassembly **32400**, **33400** to close against the first end **32410***b*, **33410***b* of the second body **32405***b*, **32405***b* of the rotating subassembly **32400**, **33400** to form the first seal will best protect the seal faces **32450***a*, **32450***b*, **33450***a*, **33450***b*.

In an embodiment, a first end of the second pivot pin **32305***b*, **33305***b* may be attached to third body **32405***c*, **33405***c* of the rotating subassembly **32400**, **33400** through the third portion **3205***c*, **3305***c* of the body **3205**, **3305**. In an embodiment, a first end of the second pivot pin **32305***b*, **33305***b* may be attached to third body **32405***c*, **33405***c* of the rotating subassembly **32400**, **33400** through the third portion **3205***c*, **3305***c* of the body **3205**, **3305** via fasteners. Any suitable fasteners may be used for the second pivot pin **32305***b*, **33305***b* and the third body **32405***c*, **33405***c* of the rotating subassembly **32400**, **33400**. For example, suitable fasteners include, but are not limited to, bolts, screws, pins, rivets, welds, and combinations thereof. Fasteners are well known in the art.

In an embodiment, a second end of the second pivot pin **32305***b*, **33305***b* may be attached to a first end of the second push rod **32310***b*, **33310***b*. In an embodiment, a second end of the second pivot pin **32305***b*, **33305***b* may be attached to a first end of the second push rod **32310***b*, **33310***b* via fasteners. Any suitable fasteners may be used for the second pivot pin **32305***b*, **33305***b* and the second push rod **32310***b*, **33310***b*. For example, suitable fasteners include, but are not limited to, bolts, screws, pins, rivets, welds, and combinations thereof. Fasteners are well known in the art.

In an embodiment, a second end of the second push rod **32310***b*, **33310***b* may be attached to a second cam roller **32325***b*, **33325***b*. In an embodiment, a second end of the second push rod **32310***b*, **33310***b* may be attached to a second cam roller **32325***b*, **33325***b* via fasteners. Any suitable fasteners may be used for the second push rod **32310***b*, **33310***b* and the second cam roller **32325***b*, **33325***b*. For example, suitable fasteners include, but are not limited to, bolts, screws, pins, rivets, welds, and combinations thereof. Fasteners are well known in the art.

In an embodiment, the second cam roller **32325***b*, **33325***b* may travel along a surface of the cam **32330**, **33330**.

In an embodiment, the cam **32330**, **33330** may be attached to the pivot drive **3290**, **3390**. In an embodiment, the cam **32330**, **33330** may be attached to the pivot drive **3290**, **3390** via fasteners. Any suitable fasteners may be used for the cam **32330**, **33330** and the pivot drive **3290**, **3390**. For example, suitable fasteners include, but are not limited to, bolts, screws, pins, rivets, welds, and combinations thereof. Fasteners are well known in the art.

In an embodiment, the cam **32330**, **33330** may be any suitable shape. For example, suitable shapes include, but are not limited to, an "∞" shape, an "8" shape, a "0" shape, an "O" shape, and combinations and/or portions thereof. In an embodiment, the cam **32330**, **33330** may be a double lobed shape. See e.g., FIGS. **33**C-**33**D.

In an embodiment, the second push rod **32310***b*, **33310***b* may be any suitable shape. For example, suitable shapes include, but are not limited to, a cross shape, a "T" shape, a "Y" shape, and combinations and/or portions thereof. In an embodiment, the second push rod **32310***b*, **33310***b* may be a cross shape. See e.g., FIGS. **32**A-**32**B & **33**A-**33**D.

In an embodiment, a second guide block **32315***b*, **33315***b* may be attached to the second portion **3205***b*, **3305***b* of the body **3205**, **3305**. In an embodiment, a second guide block **32315***b*, **33315***b* may be attached to the second portion **3205***b*, **3305***b* of the body **3205**, **3305** via fasteners. Any

suitable fasteners may be used for the second guide block **32315***b*, **33315***b* and the second portion **3205***b*, **3305***b* of the body **3205**, **3305**. For example, suitable fasteners include, but are not limited to, bolts, screws, pins, rivets, welds, and combinations thereof. Fasteners are well known in the art.

In an embodiment, the second push rod **32310***b*, **33310***b* may pass through the second guide block **32315***b*, **33315***b*.

In an embodiment, a second end of the second spring **32320***b*, **33320***b* may be attached to the second guide block **32315***b*, **33315***b*. In an embodiment, a second end of the second spring **32320***b*, **33320***b* may be attached to the second guide block **32315***b*, **33315***b* via fasteners. Any suitable fastener may be used for the second spring **32320***b*, **33320***b* and the second guide block **32315***b*, **33315***b*. For example, suitable fasteners include, but are not limited to, bolts, screws, pins, rivets, welds, and combinations thereof. Fasteners are well known in the art.

In an embodiment, a first end of the second spring **32320***b*, **33320***b* may be attached to the second push rod **32310***b*, **33310***b*. In an embodiment, a first end of the second spring **32320***b*, **33320***b* may be attached to the second push rod **32310***b*, **33310***b* via fasteners. Any suitable fastener may be used for the second spring **32320***b*, **33320***b* and the second push rod **32310***b*, **33310***b*. For example, suitable fasteners include, but are not limited to, bolts, screws, pins, rivets, welds, and combinations thereof. Fasteners are well known in the art.

In a closed position for the rotating subassembly **32400**, **33400**, the second cam roller **32325***b*, **33325***b* may be disposed in a most recessed portion of the cam **32330**, **33330** allowing the second end **32415***b*, **33415***b* of the second body **32405***b*, **33405***b* of the rotating subassembly **32400**, **33400** to close against the first end **32410***c*, **33410***c* of the third body **32405***c*, **33405***c* of the rotating subassembly **32400**, **33400** to form a second seal between seal faces **32450***c*, **32450***d*, **33450***c*, **33450***d*.

As the pivot shaft **3285**, **3385** and the cam **32330**, **33330** (and the rotating subassembly **32400**, **33400**) rotates, the second cam roller **32325***b*, **33325***b* travels along the cam **32330**, **33330** and collapses the third body **32405***c*, **33405***c* of the rotating subassembly **32400**, **33400** into the body **3205**, **3305** to prevent unnecessary wear to the seal faces **32450***c*, **32450***d*, **33450***c*, **33450***d*.

In an embodiment, the cam **32330**, **33330** may be sized and shaped such that the timing of allowing the second end **32415***b*, **33415***b* of the second body **32405***b*, **33405***b* of the rotating subassembly **32400**, **33400** to close against the first end **32410***c*, **33410***c* of the third body **32405***c*, **33405***c* of the rotating subassembly **32400**, **33400** to form the second seal will best protect the seal faces **32450***c*, **32450***d*, **33450***c*, **33450***d*.

Optional Transducer Subassemblies

FIG. **19** illustrates a cross-sectional view of the drilling mud screen system **1900** in a monitoring configuration according to an embodiment of the present invention, showing an optional transducer subassembly **19100**, as discussed above.

FIG. **20**A illustrates an upper, right side perspective view of an optional transducer subassembly **2000** according to an embodiment of the present invention; and FIG. **20**B illustrates a side perspective view of the optional transducer subassembly **2000** of FIG. **20**A, as discussed above.

FIG. **30**B illustrates the upper, left perspective view of the drilling mud screen system **3000** of FIG. **30**A, showing an optional first transducer subassembly **30100***a* and an optional second transducer subassembly **30100***b*; and FIG. **31**B illustrates the left perspective view of the drilling mud screen system **3100** of FIG. **31**A, showing an optional first transducer subassembly **31100***a* and an optional second transducer subassembly **31100***b*. See also FIGS. **20**A & **20**B.

As shown in FIGS. **30**A and **31**A, the drilling mud screen system **3000**, **3100** has a body **3005**, **3105** having a first end **3010**, **3110** and a second end **3015**, **3115**, a drilling mud inlet **3020**, **3120** and a drilling mud outlet **30**, **25**, **3125**, an optional first transducer subassembly **30100***a*, **31100***a* and an optional second transducer subassembly **30100***b*, **31100***b*.

In an embodiment, the drilling mud screen system **3000**, **3100** has a drilling mud screen **3040**, **3140** fluidly connected to and disposed between the drilling mud inlet **3020**, **3120** and the drilling outlet **3025**, **3125**.

In an embodiment, a drilling mud inlet **3020**, **3120** of the drilling mud screen system **3000**, **3100** (e.g., via the first transducer subassembly **30100***a*, **31100***a*) may be fluidly connected to a high-pressure outlet of a drilling mud pump via a connection. In an embodiment, a drilling mud outlet **3025**, **3125** (e.g., via the second transducer subassembly **30100***b*, **31100***b*) of the drilling mud screen system **3000**, **3100** may be fluidly connected to an inlet of a vibrator hose to a standpipe via a connection.

Alternatively, the drilling mud screen system **3000**, **3100** (e.g., via the first transducer subassembly **30100***a*, **31100***a*) may be installed between an outlet of the vibrator hose and an inlet of the standpipe, or at any point in the standpipe via a connection.

In an embodiment, the drilling mud inlet **3020**, **3120** (e.g., via the first transducer subassembly **30100***a*, **31100***a*) may be fluidly connected to, for example, an outlet of a drilling mud pump via a connection; and the drilling mud outlet **3025**, **3125** (e.g., via the second transducer subassembly **30100***b*, **31100***b*) may be fluidly connected to, for example, an inlet of a vibrator hose via a connection. Any suitable connection may be used for the drilling mud inlet **3020**, **3120** and the drilling mud outlet **3025**, **3125**. For example, suitable connections include, but are not limited to, pipe fittings and welds. Connections are well known in the art. In an embodiment, the drilling mud inlet **3020**, **3120** (e.g., via the first transducer subassembly **30100***a*, **31100***a*) may be fluidly connected to, for example, an outlet of a drilling mud pump via a weld; and the drilling mud outlet **3025**, **3125** (e.g., via the second transducer subassembly **30100***b*, **31100***b*) may be fluidly connected to, for example, an inlet of a vibrator hose via a weld.

In an embodiment, the first transducer access port **3032***a*, **3132***a* of the first transducer subassembly **30100***a*, **31100***a* and/or the second transducer access port **1032***b*, **3132***b* of the second transducer subassembly **30100***b*, **31100***b* may be closed with a transducer **28105** via a fitting. See e.g., FIG. **28**. Any suitable type of transducer may be used. For example, suitable types of transducers include, but are not limited to, displacement transducers, flow rate transducers, pressure transducers, temperature transducers and any combination thereof. Any suitable fitting may be used. For example, suitable fittings include, but are not limited to, pipe fittings. Fittings are well known in the art. In an embodiment, the first transducer access port **3032***a*, **3132***a* of the first transducer subassembly **30100***a*, **31100***a* and/or the second transducer access port **3032***b*, **3132***b* of the second transducer subassembly **30100***b*, **31100***b* may be closed with a pressure transducer via a 2-inch 1502 WECO union.

In an embodiment, a computing device (such as a rig computer) may include a bus that directly or indirectly couples the following devices: memory, one or more processors, one or more presentation components, one or more input/output (I/O) ports, I/O components, a user interface

and a power supply. The computing device may include a variety of computer-readable media. The memory may include computer-storage media in the form of volatile and/or nonvolatile memory. The presentation component(s) present data indications to a user or other device. The user interface allows the user to input/output information to/from the computing device. The one or more I/O ports may allow the computing device to be logically coupled to other devices including a transducer **28105**, and other I/O components, some of which may be built in. See e.g., FIG. **28**. Examples of other I/O components include a printer, scanner, wireless device, and the like.

In an embodiment, the first transducer access port **3032***a*, **3132***a* of the first transducer subassembly **30100***a*, **31100***a* and/or the second transducer access port **3032***b*, **3132***b* of the second transducer subassembly **30100***b*, **31100***b* may be sealed with an end cap via an O-ring. Any suitable O-ring may be used. For example, suitable O-rings include, but are not limited to, 300 Series O-rings. O-rings are well known in the art.

In an embodiment, the first transducer subassembly **30100***a*, **31100***b* and the second transducer subassembly **30100***b*, **31100***b* may be constructed of any suitable material. For example, suitable materials include, but are not limited to, any alloy steel suitable for a drilling mud application. in an embodiment, the first transducer subassembly **30100***a*, **31100***a* and/or the second transducer subassembly **30100***b*, **31100***b* may be constructed of a low alloy steel (e.g., 4140, 4145, 4330), a stainless steel (e.g., 17-4, 304, 316), a super alloy (e.g., Inconel), a titanium alloy (e.g., Ti-6Al-4V, Ti-6Al-6V-2Sn), a copper alloy (e.g., Beryllium Copper), a Cobalt alloy (e.g., Stellite), an Aluminum alloy (e.g., 2024, 6061, 7075), and combinations thereof. In an embodiment, the first transducer subassembly **30100***a*, **31100***a* and/or the second transducer subassembly **30100***b*, **31100***b* may be constructed of an American Iron and Steel Industry (AISI) 4130/75k yield or equivalent material. In an embodiment, the inner surface of the first transducer subassembly **30100***a*, **31100***a* and/or the inner surface of the second transducer subassembly **30100***b*, **31100***b* may be unpainted. In an embodiment, the outer surface of the first transducer subassembly **30100***a*, **31100***a* and/or the outer surface of the second transducer subassembly **30100***b*, **31100***b* may be painted.

Exemplary Drilling Mud Screens

FIG. **5**A illustrates an upper, cross-sectional view of a drilling mud screen **500** according to an embodiment of the present invention, as discussed above. FIG. **5**B illustrates a detailed view of A-A of FIG. **5**A; FIG. **5**C illustrates a detailed view of B of FIG. **5**A; and FIG. **5**D illustrates a detailed view of C of FIG. **5**A. FIG. **5**E illustrates an upper, right side perspective view of the drilling mud screen **500** of FIG. **5**A.

Optional Drilling Mud Screen

FIG. **22**A illustrates an end view of an optional drilling mud screen **2200** according to an embodiment of the present invention, as discussed above. FIG. **22**B illustrates a detailed, cross-sectional view of A-A of FIG. **22**A, showing an optional drilling mud screen insert **22105**, and optional first end retaining ring **22110**, an optional filter length **22115**, and an optional retaining ring **22120**; FIG. **22**C illustrates a detailed view of B of FIG. **22**B; and FIG. **22**D illustrates a detailed, cross-sectional view of C-C of FIG. **22**C. FIG. **22**E illustrates an upper, right perspective view of the drilling mud screen **2200** of FIGS. **22**A-**22**B.

Alternative Improved Exemplary Valve-Style Drilling Mud Screen System

Body with Trapdoor Mechanism

FIG. **37**A illustrates an end view of an exemplary trapdoor-style drilling mud screen system **3700**; FIG. **37**B illustrates a detailed, cross-sectional view A-A of FIG. **37**A; FIG. **37**C illustrates a detailed, cross-sectional view B-B of FIG. **37**A; FIG. **37**D illustrates a detailed view C of FIG. **37**C; FIG. **37**E illustrates an end view of the exemplary trapdoor-style drilling mud screen system **3700** of FIGS. **37**A-**37**D; FIG. **37**F illustrates a detailed, cross-sectional view G-G of FIG. **37**E; FIG. **37**G illustrates an end view of the exemplary trapdoor-style drilling mud screen system **3700** of FIGS. **37**A-**37**F; FIG. **37**H illustrates a detailed, cross-sectional view J-J of FIG. **37**G; FIG. **37**I illustrates an end view of the exemplary trapdoor-style drilling mud screen system **3700** of FIGS. **37**A-**37**H; FIG. **37**J illustrates a detailed cross-sectional view H-H of FIG. **37**I; FIG. **37**K illustrates an upper, right perspective view of the exemplary trapdoor-style drilling mud screen system **3700** of FIGS. **37**A-**37**J, showing the trapdoor-style drilling mud screen system **3700** in a closed position; FIG. **37**L illustrates an upper, right perspective view of the exemplary trapdoor-style drilling mud screen system **3700** of FIGS. **37**A-**37**K, showing the trapdoor-style drilling mud screen system **3700** in an open position; and FIG. **37**M illustrates an exploded view of the exemplary trapdoor-style drilling mud screen system **3700** of FIGS. **37**A-**37**L.

FIG. **38**A illustrates a cross-sectional view of an exemplary trapdoor-style drilling mud screen system **3800** having a reversed drilling mud screen **3840**, showing the trapdoor-style drilling mud screen system **3800** in a closed position; and FIG. **38**B illustrates a cross-sectional view of the exemplary trapdoor-style drilling mud screen system **3800** of FIG. **38**A, showing the trapdoor-style drilling mud screen system **3800** in an open position.

As shown in FIGS. **37**A-**37**M and **38**A-**38**B, the drilling mud screen system **3700**, **3800** has a body **3705**, **3805** having a first end **3710**, **3810** and a second end **3715**, **3815**, a drilling mud inlet **3720**, **3820** and a drilling mud outlet **3725**, **3825**.

In an embodiment, the drilling mud screen system **3700**, **3800** has a drilling mud screen **3740**, **3840** fluidly connected to and disposed between the first drilling mud inlet **3720**, **3820** and the first drilling outlet **3725**, **3825**.

In an embodiment, the body **3705**, **3805** has a first portion **3705***a*, **3805***a*, a second portion **3705***b*, **3805***b* and a third portion **3705***c*, **3805***c*. In an embodiment, the first portion **3705***a*, **3805***a* of the body **3705**, **3805** is an inlet portion. In an embodiment, the second portion **3705***b*, **3805***b* of the body **3705**, **3805** is a rotating trapdoor subassembly/drilling mud screen portion. In an embodiment, the third portion **3705***c*, **3805***c* of the body **3705**, **3805** is an outlet portion.

In an embodiment, the first portion **3705***a*, **3805***a* and the third portion **3705***c*, **3805***c* may be any suitable shape. For example, suitable shapes include, but are not limited to, a cone, a cylinder, a rectangular prism (e.g., cubic, cuboid), a pentagonal prism, a sphere, a spheroid, a triangular prism, and combinations and/or portions thereof. In an embodiment, the first portion **3705***a*, **3805***a* and the third portion **3705***c*, **3805***c* may be a cylinder or a combination of cylinders.

In an embodiment, the first portion **3705***a*, **3805***a* and the third portion **3705***c*, **3805***c* may have any suitable inner diameter or dimension. For example, a suitable inner diameter for the first portion **3705***a*, **3805***a* and the third portion **3705***c*, **3805***c* may be from about 2-inches to about 5-inches, and any range or value there between. In an embodiment, the

inner diameter of the first portion **3705***a*, **3805***a* and the third portion **3705***c*, **3805***c* may be about 4.06-inches.

In an embodiment, the second portion **3705***b*, **3805***b* may be any suitable shape. For example, suitable shapes include, but are not limited to, a cone, a cylinder, a rectangular prism (e.g., cubic, cuboid), a pentagonal prism, a sphere, a spheroid, a triangular prism, and combinations and/or portions thereof. In an embodiment, the second portion **3705***b*, **3805***b* may be a cylinder with open upper portion. See e.g., FIGS. **37**A-**37**M & **38**A-**38**B (open upper portion).

In an embodiment, the second portion **3705***b*, **3805***b* may have any suitable inner diameter or dimension. For example, a suitable inner diameter for the second portion **3705***b*, **3805***b* may be from about 4-inches to about 7-inches, and any range or value there between. In an embodiment, the inner diameter for the second portion **3705***b*, **3805***b* may be about 4.9-inches.

For example, a suitable inner dimension for the second portion **3705***b*, **3805***b* may be from about 4-inches to about 7-inches across, and any range or value there between. In an embodiment, the inner dimension for the second portion **3705***b*, **3805***b* may be about 4.9-inches across.

In an embodiment, a drilling mud inlet **3720**, **3820** of the drilling mud screen system **3700**, **3800** may be fluidly connected to a high-pressure outlet of a drilling mud pump via a connection. In an embodiment, a drilling mud outlet **3725**, **3825** of the drilling mud screen system **3700**, **3800** may be fluidly connected to an inlet of a vibrator hose to a standpipe via a connection.

Alternatively, the drilling mud screen system **3700**, **3800** may be installed between an outlet of the vibrator hose and an inlet of the standpipe, or at any point in the standpipe via a connection.

In an embodiment, the drilling mud inlet **3720**, **3820** may be fluidly connected to, for example, an outlet to a drilling mud pump via a connection; and the drilling mud outlet **3725**, **3825** may be fluidly connected to, for example, an inlet to a vibrator hose via a connection. Any suitable connection may be used for the drilling mud inlet and the drilling mud outlet. For example, suitable connections include, but are not limited to, pipe fittings and welds. Connections are well known in the art. In an embodiment, the drilling mud inlet **3720**, **3820** may be fluidly connected to, for example, an outlet to a drilling mud pump via a weld; and the drilling mud outlet **3725**, **3825** may be fluidly connected to, for example, an inlet to a vibrator hose via a weld.

In an embodiment, the body **3705**, **3805** of the drilling mud screen system **3700**, **3800** may be constructed of any suitable material. For example, suitable materials include, but are not limited to, any alloy suitable for a drilling mud application. In an embodiment, the body **3705**, **3805** may be constructed of a low alloy steel (e.g., 4140, 4145, 4330), a stainless steel (e.g., 17-4, 304, 316), a super alloy (e.g., Inconel), a titanium alloy (e.g., Ti-6Al-4V, Ti-6Al-6V-2Sn), a copper alloy (e.g., Beryllium Copper), a Cobalt alloy (e.g., Stellite), an Aluminum alloy (e.g., 2024, 6061, 7075) and combination thereof. In an embodiment, the body **3005**, **3105** may be constructed of an American Iron and Steel Industry (AISI) 4130/75k yield or equivalent material. In an embodiment, the inner surface of the body **3705**, **3805** may be unpainted. In an embodiment, the outer surface of the body **3705**, **3805** may be painted.

Pivot Subassembly

As shown in FIGS. **37**A-**37**M and **38**A-**38**B, the second portion **3705***b*, **3805***b* of the body **3705**, **3805** and/or the rotating trapdoor subassembly **37400**, **38400** has a pivot shaft **3785**, **3885**, a first retaining ring **3785***a* and a second retaining ring **3785***b*.

In an embodiment, the rotating trapdoor subassembly **37400**, **38400** may be retained in the second portion **3705***b*, **3805***b* of the body **3705**, **3805** via the pivot shaft **3785**, **3885**. See e.g., FIGS. **37**B, **37**F, **37**H, **37**J-**37**L & **37**M. In an embodiment, the rotating trapdoor subassembly **37400**, **38400** may be retained in the second portion **3705***b*, **3805***b* of the body **3705**, **3805** via the pivot shaft **3785**, **3885** such that the rotating trapdoor subassembly **37400**, **38400** may rotate with respect to the second portion **3705***b*, **3805***b* of the body **3705**, **3805**.

Rotating Trapdoor Subassembly

FIG. **37**K illustrates an upper, right perspective view of the exemplary trapdoor-style drilling mud screen system **3700** of FIGS. **37**A-**37**J, showing the trapdoor-style drilling mud screen system **3700** in a closed position; FIG. **37**L illustrates an upper, right perspective view of the exemplary trapdoor-style drilling mud screen system **3700** of FIGS. **37**A-**37**K, showing the trapdoor-style drilling mud screen system **3700** in an open position; and FIG. **37**M illustrates an exploded view of the exemplary trapdoor-style drilling mud screen system **3700** of FIGS. **37**A-**37**L.

FIG. **38**A illustrates a cross-sectional view of an exemplary trapdoor-style drilling mud screen system **3800** having a reversed drilling mud screen **3840**, showing the trapdoor-style drilling mud screen system **3800** in a closed position; and FIG. **38**B illustrates a cross-sectional view of the exemplary trapdoor-style drilling mud screen system **3800** of FIG. **38**A, showing the trapdoor-style drilling mud screen system **3800** in an open position.

As shown in FIGS. **37**A-**37**M and **38**A-**38**B, the rotating trapdoor subassembly **37400**, **38400** has a trapdoor body **37405**, **38405** having a first end **37410**, a second end **37415**, a first drilling mud inlet **37420**, a first drilling mud outlet **37425**, and an access port **3730**, **3830**.

In an embodiment, the rotating subassembly **37400**, **38400** has a drilling mud screen **3740**, **3840** fluidly connected to and disposed between the first drilling mud inlet **37420** and the first drilling outlet **37425**.

In an embodiment, the trapdoor body **37405**, **38405** may be any suitable shape. For example, suitable shapes include, but are not limited to, a cone, a cylinder, a rectangular prism (e.g., cubic, cuboid), a pentagonal prism, a sphere, a spheroid, a triangular prism, and combinations and/or portions thereof. In an embodiment, the trapdoor body **37405**, **38405** may be a cylinder or a combination of cylinders. In an embodiment, the trapdoor body **37405**, **38405** may be a combination of a cylinders and a rectangular prism.

In an embodiment, the trapdoor body **37405**, **38405** may have any suitable inner diameter or dimension. For example, a suitable inner diameter for the trapdoor body **37405**, **38405** may be from about 2-inches to about 7-inches, and any range or value there between. In an embodiment, the inner diameter of the trapdoor body **37405**, **38405** may be about 4.06-inches and/or 4.9-inches.

For example, a suitable inner dimension for the trapdoor body **37405**, **38405** may be from about 2-inches to about 7-inches across, and any range or value there between. In an embodiment, the inner dimension for the trapdoor body **37405**, **38405** may be about 4.06-inches and/or 4.9-inches across.

In an embodiment, an internal drilling mud outlet **3725***a* of the body **3705**, **3805** of the drilling mud screen system **3700**, **3800** may be fluidly connected to the first drilling mud

inlet **37420** of the trapdoor body **37405**, **38405** of the rotating trapdoor subassembly **37400**, **38400**.

In an embodiment, the first drilling mud outlet **37425***a* of the trapdoor body **37405***a*, **38405***a* of the rotating trapdoor subassembly **37400**, **38400** may be fluidly connected to an internal drilling mud inlet **3720***a*, **3820***a* of the body **3705**, **3805** of the drilling mud screen system **3700**, **3800**.

In an embodiment, a first piston ring **37430***a* may be disposed between the first end **3710**, **3810** of the body **3705**, **3805** of the drilling mud screen system **3700**, **3800** and the second end **37515***a*, **38515***a* of the first subassembly **37500**, **38500**. See e.g., FIG. **37**M. In an embodiment, a first piston ring **37430***a* may be disposed in a first piston cavity (not shown) between the body **3705**, **3805** of the drilling mud screen system **3700**, **3800** and the second end **37510***a*, **38510***a* of the first subassembly **37500**, **38500** to prevent buildup and compaction of debris in the first piston cavity (not shown).

In an embodiment, a second piston ring **37430***b* may be disposed between the second end **3715**, **3815** of the body **3705**, **3805** of the drilling mud screen system **3700**, **3800** and the first end **37510***b*, **38510** of the second subassembly **37500***b*, **38500***b*. See e.g., FIG. **37**M. In an embodiment, a second piston ring **37430***b* may be disposed in a second piston cavity (not shown) between the second end **3715**, **3815** of the body **3705**, **3805** of the drilling mud screen system **3700**, **3800** and the first end **37510***b*, **38510***b* of the second subassembly **37500***b*, **38500***b* to prevent buildup and compaction of debris in the second piston cavity (not shown).

In an embodiment, the first piston ring **37430***a* and the second piston ring **37430***b* may be constructed of any suitable compressible material to prevent buildup and compaction of debris in a first piston cavity (not shown) and/or a second piston cavity (not shown), respectively.

In an embodiment, a first spring **37440***a* may be disposed between the first subassembly **37500***a*, **38500***a* and the body **3705**, **3805** of the drilling mud screen system **3700**, **3800**. See e.g., FIG. **37**M. In an embodiment, a first spring **37440***a* may be disposed in a first seal piston cavity (not shown) between the first subassembly **37500***a*, **38500***a* and the body **3705**, **3805** of the drilling mud screen system **3700**, **3800** to engage and seal a second end **37515***a*, **38515***a* of the first subassembly **37500***a*, **38500***a* with a first end **3710**, **3810** of the body **3705**, **3805** of the drilling mud screen system **3700**, **3800**.

In an embodiment, a second spring **37440***b* may be disposed between the body **3705**, **3805** of the drilling mud screen system **3700**, **3800** and the second subassembly **37500***b*, **38500***b*. See e.g., FIG. **37**M. In an embodiment, a second spring **37440***b* may be disposed in a second seal piston cavity (not shown) between the body **3705**, **3805** of the drilling mud screen system **3700**, **3800** and the second subassembly **37500***b*, **38500***b* to engage and seal a second end **3715**, **3815** of the body **3705**, **3805** of the drilling mud screen system **3700**, **3800** with a first end **37510***b*, **38510***b* of the second subassembly **37500***b*, **38500***b*.

In an embodiment, the body **3705**, **3805** of the drilling mud screen system **3700**, **3700** and the trapdoor body **37405**, **38405** of the rotating trapdoor subassembly **37400**, **38400** may be sealed via an O-ring. See e.g., FIG. **37**M. Any suitable O-ring may be used. For example, suitable O-rings include, but are not limited to, 300 Series O-rings. O-rings are well known in the art.

In an embodiment, the second end **3715***a* of the first portion **3705***a*, **3805***a* of the body **3705**, **3805** has a first seal face **37450***a*. See e.g., FIG. **37**M.

In an embodiment, the first end **37410** of the trapdoor body **37405**, **38405** of the rotating trapdoor subassembly **37400**, **38400** has a second seal face **37450***b*. See e.g., FIG. **37**M.

In an embodiment, the first seal face **37450***a* and the second seal face **37450***b* may have any suitable shapes to form a seal. For example, suitable shapes may be mating concave and convex surfaces, mating concave and convex surfaces similar to a ball valve, and combinations and variations thereof. In an embodiment, the first seal face **37450***a* may be concave; and the second seal face **37450***b* may be convex.

In an embodiment, the second end **37415**, **38415** of the trapdoor body **37405**, **38405** of the rotating trapdoor subassembly **3700**, **3800** has a third seal face **37450***c*. See e.g., FIG. **37**M.

In an embodiment, the first end **3710***c* of the third portion **3705***c*, **3805***c* of the body **3705**, **3805** has a fourth seal face **37450***d*. See e.g., FIG. **37**M.

In an embodiment, the third seal face **37450***c* and the fourth seal face **37450***d* may have any suitable shapes to form a seal. For example, suitable shapes may be mating concave and convex surfaces, mating concave and convex surfaces similar to a ball valve, and combinations and variations thereof. In an embodiment, the third seal face **37450***c* may be convex; and the fourth seal face **37450***d* may be concave.

In an embodiment, the trapdoor body **37405**, **38405** of the rotating trapdoor subassembly **37400**, **38400** may be constructed of any suitable material. For example, suitable materials include, but are not limited to, any alloy suitable for a drilling mud application. In an embodiment, the trapdoor body **37405**, **38405** may be constructed of a low alloy steel (e.g., 4140, 4145, 4330), a stainless steel (e.g., 17-4, 304, 316), a super alloy (e.g., Inconel), a titanium alloy (e.g., Ti-6Al-4V, Ti-6Al-6V-2Sn), a copper alloy (e.g., Beryllium Copper), a Cobalt alloy (e.g., Stellite), an Aluminum alloy (e.g., 2024, 6061, 7075) and combination thereof. In an embodiment, the trapdoor body **37405**, **38405** may be constructed of an American Iron and Steel Industry (AISI) 4130/75k yield or equivalent material. In an embodiment, the inner surface of the trapdoor body **37405**, **38405** may be unpainted. In an embodiment, the outer surface of the trapdoor body **37405**, **38405** may be painted.

Piston Guide Bar

As shown in FIGS. **37**A-**37**M and FIGS. **38**A-**38**B, the drilling mud screen system **3700**, **3800** further comprises a first piston guide bar **37315***a* and a second piston guide bar **37315***b* for the first piston **37435***a*.

In an embodiment, the first piston guide bar **37315***a* and the second piston guide bar **37315***b* guides the first piston **37435***a* to engage the first end **37410** of the rotating trapdoor subassembly **37400** when the rotating trapdoor subassembly **37400** is in a closed position.

In an embodiment, the first piston guide bar **37315***a* and the second piston guide bar **37315***b* guides the first piston **37435***a* to engage a first slot **37335***a* and a second slot (not shown), respectively, in the first portion **3705***a*, **3805***a* of the body **3705** or the second portion **3705***b*, **3805***b* of the body **3705**, and a third slot **37340***a* and a fourth slot (not shown), respectively, in the first piston **37435***a* when the rotating trapdoor subassembly **37400** is in a closed position. See e.g., FIG. **37**M.

In an embodiment, the first piston guide bar **37315***a* and the second piston guide bar **37315***b* guides the first piston **37435***a* to engage a first slot **37335***a* and a second slot (not shown), respectively, in first portion **3705***a*, **3805***a* of the

body **3705** or the second portion **3705***b*, **3805***b* of the body **3705**, a third slot **37340***a* and a fourth slot (not shown), respectively, in the first piston **37435***a* and a fifth slot **37345***a* and a sixth slot (not shown) in the threaded lock ring **37600** (discussed below) when the rotating trapdoor subassembly **37400** is in a closed position. See e.g., FIG. **37**M.

In an embodiment, the first piston guide bar **37315***a* and the second piston guide bar **37315***b* locks the first piston **37435***a* to contact and seal the first end **37410** of the rotating trapdoor subassembly **37400** when the rotating trapdoor subassembly **37400** is in a closed position.

In an embodiment, the first piston guide bar **37315***a* and the second piston guide bar **37315***b* guides the first piston **37435***a* to disengage from the first end **37410** of the rotating trapdoor subassembly **37400** when the rotating trapdoor subassembly **37400** is in an open position.

In an embodiment, the first piston guide bar **37315***a* and the second piston guide bar **37315***b* separates the first piston **37435***a* to disengage and create a gap from the frost end **37410** of the rotating trapdoor subassembly **37400** when the rotating trapdoor subassembly **37400** is in the open position to avoid damage to the first seal face **37450***a* and/or the second seal face **37450***b*.

In an embodiment, the first piston guide bar **37315***a* further comprises a ball bearing for smooth action. In an embodiment, the second piston guide bar **37315***b* further comprises a ball bearing for smooth action. See e.g., FIG. **37**M.

In an embodiment, the first piston guide bar **37315***a* and the second piston guide bar **37315***b* may be constructed from any suitable material. For example, suitable materials include, but are not limited to, any alloy suitable for a drilling mud application. In an embodiment, the first piston guide bar **37315***a* and the second piston guide bar **37315***b* may be constructed of a low alloy steel (e.g., 4140, 4145, 4330), a stainless steel (e.g., 17-4, 304, 316), a super alloy (e.g., Inconel), a titanium alloy (e.g., Ti-6Al-4V, Ti-6Al-6V-2Sn), a copper alloy (e.g., Beryllium Copper), a Cobalt alloy (e.g., Stellite), an Aluminum alloy (e.g., 2024, 6061, 7075) and combination thereof. In an embodiment, the first piston guide bar **37315***a* and the second piston guide bar **37315***b* may be constructed of an American Iron and Steel Industry (AISI) 4130/75k yield or equivalent material

Subassemblies

As shown in FIGS. **37**A-**37**M and FIGS. **38**A-**38**B, the drilling mud screen system **3700**, **3800** further comprises a first subassembly **37500***a*, **38500***a* and a second subassembly **37500***b*, **38500***b*. In an embodiment, the drilling mud screen system **3700**, **3800** has a first subassembly **37500***a*, **38500***a* having a first end **37510***a*, **38510***a* and a second end **37515***a*, **38515***a*, a first inlet **37520***a*, **38520***a* of the first subassembly **37500***a*, **38500***a* and a first outlet **37525***a*, **38525***a* of the first subassembly **37500***a*, **38500***a*.

In an embodiment, the drilling mud screen system **3700**, **3800** has a second subassembly **37500***b*, **38500***b* having a first end **37510***b*, **38510***b* and a second end **37515***b*, **38515***b*, a second inlet **37520***b*, **38520***b* of the second subassembly **37500***b*, **38500***b* and a second outlet **37525***b*, **38525***b* of the second subassembly **37500***b*, **37500***b*.

In an embodiment, the first drilling mud inlet **37520***a*, **38520***a* of the first subassembly **37500***a*, **38500***a* may be fluidly connected to, for example, an outlet of a drilling mud pump via a connection; and the second drilling mud outlet **37525***b*, **38525***b* of the second subassembly **37500***b*, **38500***b* may be fluidly connected to an inlet of a vibrator hose via a connection. Any suitable connection may be used for the first drilling mud inlet **37520***a*, **38520***a* of the first subassembly **37500***a*, **38500***a* and the second drilling mud outlet **37525***b*, **38525***b* of the second subassembly **37500***b*, **38500***b*. For example, suitable connections include, but are not limited to, pipe fittings and welds. Connections are well known in the art. In an embodiment, the first drilling mud inlet **37520***a*, **38520***a* of the first subassembly **37500***a*, **38500***a* may be fluidly connected to, for example, an outlet of a drilling mud pump via a weld; and the second drilling mud outlet **37525***b*, **38525***b* of the second subassembly **37500***b*, **38500***b* may be fluidly connected to an inlet of a vibrator hose via a weld.

In an embodiment, the drilling mud inlet **3720**, **3820** of the body **3705**, **3805** may be fluidly connected to the first drilling mud outlet **37525***a*, **38525***a* of the first subassembly **37500***a*, **38500***a* via a connection; and the drilling mud outlet **3725**, **3825** of the body **3705**, **3805** may be fluidly connected to the second drilling mud inlet **37520***b*, **38820***b* of the second subassembly **37500***b*, **38500***b* via a connection. Any suitable connection may be used for the drilling mud inlet **3720**, **3820** of the body **3705**, **3805** and the drilling mud outlet **3725**, **3825** of the body **3705**, **3805**. For example, suitable connections include, but are not limited to, pipe fittings and other connections. In an embodiment, the first drilling mud inlet **3720**, **3820** of the body **3705**, **3905** may be fluidly connected to, for example, a first drilling mud outlet **37525***a*, **38525***a* of a first subassembly **37500***a*, **38500***a* via a pipe fitting; and the second drilling mud outlet **3725**, **3825** of the body **3705**, **3805** may be fluidly connected to a second drilling mud inlet **37520***b*, **38520***b* of the second subassembly **37500***b*, **38500***b* via a pipe fitting.

In an embodiment, the drilling mud outlet **3725***a*, **3825***a* of the body **3705**, **3805** may be connected to the first drilling mud inlet **37520***a*, **38520***a* of the first subassembly **37500***a*, **38500***a* via a lock ring **37600**, **38600**. In an embodiment, the body **3705**, **3805** and/or the first subassembly **37500***a*, **38500***a* may be sealed with the lock ring **37600**, **38600** via an O-ring. Any suitable O-ring may be used. For example, suitable O-rings include, but are not limited to, 300 Series O-rings. O-rings are well known in the art.

In an embodiment, the first subassembly **37500***a*, **38500***a* and the second subassembly **37500***b*, **38500***b* of the drilling mud screen system **3700**, **3800** may be constructed of any suitable material. For example, suitable materials include, but are not limited to, any alloy steel suitable for a drilling mud application. In an embodiment, the first subassembly **37500***a*, **38500***a* and the second subassembly **37500***b*, **38500***b* may be constructed of an AISI 4130/75k yield or equivalent material. In an embodiment, the inner surface of the first subassembly **37500***a*, **38500***a* and the second subassembly **37500***b*, **38500***b* may be unpainted. In an embodiment, the outer surface of the first subassembly **37500***a*, **38500***a* and the second assembly **37500***b*, **38500***b* may be painted.

Threaded Lock Ring

In an embodiment, the drilling mud screen system **3700**, **3800** further comprises a threaded lock ring **37600**, **38600** having a first end **37610** and a second end **37615**.

In an embodiment, the threaded lock ring **37600**, **38600** is disposed around a first portion **3705***a*, **3805***a* of the body **3705**, **3805** and a first end **37410** of the trapdoor body **37405** of the rotating trapdoor subassembly **37400**, **38400**.

In an embodiment, the threaded lock ring **37600**, **38600** is disposed around a first portion **3705***a*, **3805***a* of the body **3705**, **3805** and a first end **37410** of the trapdoor body **37405** of the rotating trapdoor subassembly **37400**, **38400** to lock the trapdoor subassembly **37400**, **38400** in a closed position.

In an embodiment, the first piston guide bar **37315***a* and the second piston guide bar **37315***b* is disposed through a first slot **37335***a* and a second slot (not shown) in the first portion **3705***a*, **3805***a* of the body **3705** or the second portion **3705***b*, **3805***b* of the body **3705**, a third slot **37340***a* and a fourth slot (not shown) in the first piston **37435***a* and a fifth slot and a sixth slot (not shown) in the threaded lock ring **37600** to lock the first piston **37435***a* in an engaged position when the rotating trapdoor subassembly **37400** is in a closed position. See e.g., FIG. **37**M.

In an embodiment, the threaded lock ring **37600**, **38600** further comprises one or more handles **37600***a*, **38600***a*.

In an embodiment, the threaded lock ring **37600**, **38600** may have any suitable inner diameter or dimension. For example, a suitable inner diameter for the threaded lock ring **37600**, **38600** may be from about 8-inches to about 15-inches, and any range or value there between. In an embodiment, the inner diameter of the threaded lock ring **37600**, **38600** may be about 12.4-inches.

For example, a suitable inner dimension for the threaded lock ring **37600**, **38600** may be from about 8-inches to about 15-inches across, and any range or value there between. In an embodiment, the inner dimension for the threaded lock ring **37600**, **38600** may be about 12.4-inches across.

In an embodiment, the threaded lock ring **37600**, **38600** may be constructed of any suitable material. For example, suitable materials include, but are not limited to, any alloy steel suitable for a drilling mud application. In an embodiment, the threaded lock ring **37600**, **38600** may be constructed of an AISI 4130/75k yield or equivalent material. In an embodiment, the inner surface of the threaded lock ring **37600**, **38600** may be unpainted. In an embodiment, the outer surface of the threaded lock ring **37600**, **38600** may be painted.

Exemplary Drilling Mud Screens

FIG. **5**A illustrates an upper, cross-sectional view of a drilling mud screen **500** according to an embodiment of the present invention, as discussed above. FIG. **5**B illustrates a detailed view of A-A of FIG. **5**A; FIG. **5**C illustrates a detailed view of B of FIG. **5**A; and FIG. **5**D illustrates a detailed view of C of FIG. **5**A. FIG. **5**E illustrates an upper, right side perspective view of the drilling mud screen **500** of FIG. **5**A.

Optional Drilling Mud Screen

FIG. **22**A illustrates an end view of an optional drilling mud screen **2200** according to an embodiment of the present invention, as discussed above. FIG. **22**B illustrates a detailed, cross-sectional view of A-A of FIG. **22**A, showing an optional drilling mud screen insert **22105**, and optional first end retaining ring **22110**, an optional filter length **22115**, and an optional retaining ring **22120**; FIG. **22**C illustrates a detailed view of B of FIG. **22**B; and FIG. **22**D illustrates a detailed, cross-sectional view of C-C of FIG. **22**C. FIG. **22**E illustrates an upper, right perspective view of the drilling mud screen **2200** of FIGS. **22**A-**22**B.

Alternative Reversed Drilling Mud Screen

The drilling mud screen **3840** may be any suitable filter or screen capable of filtering or screening debris from drilling muds and completion fluids. For example, suitable drilling mud screens include, but are not limited to, drill screens and rod screens.

FIGS. **38**A-**38**B illustrates a cross-sectional view of an exemplary drilling mud screen system **3800** according to an embodiment of the invention, showing a reversed drilling mud screen **3840**.

As shown in FIGS. **5**A-**5**E, **22**A-**22**E and **38**A-**38**B, the drilling mud screen **3840** has a body **505**, **2205** having a first end **515**, **2215** and a second end **510**, **2210**, a drilling mud inlet **525**, **2225**, a drilling mud outlet **520**, **2220**, a filter **530**, **2230** and an end cap **535**, **2235**.

In an embodiment, the drilling mud inlet **525**, **2225** may be fluidly connected to, for example, an outlet of a drilling mud pump via a connection; and the drilling mud outlet **520**, **2220** may be fluidly connected to an inlet of a vibrator hose via a connection. Any suitable connection may be used for the drilling mud inlet **525**, **2225** and the drilling mud outlet **520**, **2220**. For example, suitable connections include, but are not limited to, pipe fittings and welds. Connections are well known in the art. In an embodiment, the drilling mud inlet **525**, **2225** may be fluidly connected to, for example, an outlet of a drilling mud pump via a weld; and the drilling mud outlet **520**, **2220** may be fluidly connected to an inlet of a vibrator hose via a weld.

In an embodiment, the body **505**, **2205** of the drilling mud screen **3840** may be constructed of any suitable material. For example, suitable materials include, but are not limited to, any alloy steel or tool steel. In an embodiment, the body **505**, **2205** may be constructed of an AISI 4145 or equivalent material. In an embodiment, the body **505**, **2205** may be constructed of tool steel or equivalent material.

In an embodiment, the body **505**, **2205** of the drilling mud screen **3840** may have a hardened coating to reduce washing (i.e., erosion) of the screen **3840**. For example, suitable hardened coatings include, but are not limited to, any Carbide coating or equivalent. In an embodiment, the body **505**, **2205** may have a Carbide coating with about 6% Cobalt binder or equivalent material.

In an embodiment, the drilling mud outlet **520**, **2220** of the drilling mud screen **3840** may have any suitable inner diameter **565**, **2265**; and the drilling mud outlet **520**, **2220** may have any suitable outer diameter **570**, **2270**. In an embodiment, the inner diameter **565**, **2265** of the drilling mud outlet **520**, **2220** may be from about 3-inches to about 5-inches, and any range or value there between. In an embodiment, the inner diameter **565**, **2265** of the drilling mud outlet **520**, **2220** may be about 3.9-inches.

In an embodiment, the outer diameter **570**, **2270** of the drilling mud outlet **525**, **2225** may be from about 4-inches to about 6-inches, and any range or value there between. In an embodiment, the outer diameter **570**, **2270** of the drilling mud inlet **525**, **2225** may be about 4-inches.

In an embodiment, a first portion **580**, **2280** of the body **505**, **2205** of the drilling mud screen **3850** may have a filter **535**, **2235**. In an embodiment, the filter **535**, **2235** may comprise a plurality of rods spaced a distance apart to form a filter. In an embodiment, the distance may be less than a particle size (e.g., diameter) desired to be filtered from the drilling mud. For example, the particle size desired to be filtered from drilling mud may be from about 3/16-inches and larger. For example, the particle size desired to be filtered from the completion fluids may be from about 200 microns to about 2500 microns.

In an embodiment, the filter **535**, **2235** may comprise a formed sheet having drilled holes spaced a distance apart to form a filter. In an embodiment, the size of the holes (e.g., diameter) may be less than a particle size (e.g., diameter) desired to be filtered. For example, the particle size desired to be filtered from drilling mud may be from about 3/16-inches and larger. For example, the particle size desired to be filtered from the completion fluids may be from about 200 microns to about 2500 microns.

In an embodiment, a first portion **580**, **2280** of the body **505**, **2205** of the drilling mud screen **3850** may have a drilling mud inlet **525**, **2225**. In an embodiment, the drilling

mud inlet **525**, **2225** may comprise a plurality of spaces (i.e., flow passages) between a plurality of rods. In an embodiment, the drilling mud inlet **525**, **2225** may comprise a plurality of holes (i.e., flow passages) drilled in a formed sheet. For example, the particle size desired to be filtered from drilling mud may be from about 3/16-inches and larger. For example, the particle size desired to be filtered from the completion fluids may be from about 200 microns to about 2500 microns.

In an embodiment, the first portion **580**, **2280** of the body **505**, **2205** of the drilling mud screen **3850** may have a first inner diameter **590**; and the second portion **575**, **2275** of the body **505**, **2205** may have a second inner diameter **585**, **2285**.

In an embodiment, the body **505**, **2205** and/or a filter **535**, **2235** of the drilling mud screen **3840** may have a tapered drilling mud flow path from a larger inner diameter to a smaller inner diameter to reduce washing (i.e., erosion) of the screen **3840**.

In an embodiment, the first inner diameter **590**, **2290** of a first end of the body **505**, **2205** of the drilling mud screen **3840** may be from about 2-inches to about 3-inches, and any range or value there between. In an embodiment, the first inner diameter **590**, **2290** of the first portion **575**, **2275** of the body **505**, **2205** may be about 2.3-inches.

In an embodiment, an inner diameter of an outlet of the first portion **580**, **2280** and an inlet of the second portion **575**, **2275** of the body **505**, **2205** may be from about 2-inches to about 3-inches, and any range or value there between. In an embodiment, the inner diameter of the outlet of the first portion **580**, **2280** of the body **505**, **2205** and the inlet of the second portion **575**, **2275** of the body **505**, **2205** may be about 2.5-inches.

In an embodiment, the second inner diameter **585**, **2285** of a second end of the body **505**, **2205** of the drilling mud screen **3840** may be from about 2-inches to about 5-inches, and any range or value there between. In an embodiment, the second inner diameter **585**, **2285** of the second end of the body **505**, **2205** may be about 3.9-inches.

In an embodiment, the outer surface **595**, **2295** of the second portion **527**, **2275** of the body **505**, **2205** of the drilling mud screen **3840** may be adapted to engage one or more shoulders in an inner surface of the trapdoor body **38405**. In an embodiment, a first shoulder and a second shoulder of the trapdoor body **38405** may be offset from a second end **38415** of the body **38405**. The first and second shoulders may be offset from the second end **38415** of the trapdoor body **38405** at any suitable distance. In an embodiment, the first shoulder may be offset from the second end **38415** of the trapdoor body **38405** from about 4-inches to about 8-inches; and the second shoulder may be offset from the second end **38415** of the trapdoor body **38405** from about 5-inches to about 9-inches, and any range or value there between. In an embodiment, the first shoulder may be offset from the second end **38415** of the trapdoor body **38405** about 4.8-inches; and the second shoulder may be offset from the second end **38415** of the trapdoor body **38405** about 6.8-inches.

In an embodiment, the outer surface **595**, **2295** of the body **505**, **2205** of the drilling mud screen **4140**, **4240** may be sealed against an inner surface of the trapdoor body **38405** via an O-ring. Cf. FIGS. **4**A & **5**A. Any suitable O-ring may be used. For example, suitable O-rings include, but are not limited to, 300 Series O-rings. O-rings are well known in the art.

In an embodiment, a groove for an O-ring may be offset from a second end **515**, **2215** of the body **505**, **2205** of the drilling mud screen **3840**. The groove for the O-ring may be offset from the second end **515**, **2215** of the body **505**, **2205** at any suitable distance. In an embodiment, the groove for the O-ring may be offset from the second end **515**, **2215** of the body **505**, **2205** from about 4-inches to about 8-inches, and any range or value there between. In an embodiment, the groove for the O-ring may be offset from the second end **515**, **2215** of the body **505**, **2205** about 5.7-inches.

In an embodiment, the filter **530**, **2230** may have a plurality of rods spaced a distance apart to form a filter, or, alternatively, a formed sheet having drilled holes spaced a distance apart to form a filter. In an embodiment, the plurality of rods may be tapered from a larger outer diameter to a smaller outer diameter to encourage drilling mud flow to enter in straight lines through the drilling mud inlet **525**, **2225** (i.e., through flow passages between the plurality rods) to reduce washing (i.e., erosion) of the screen **3840**. In an embodiment, the filter **530**, **2230** may have a plurality of straight rows of holes drilled in a formed sheet to encourage drilling mud flow to enter in straight rows of strings through the drilling mud inlet **525**, **2225** (i.e., through straight flow passages of the drilled holes) to reduce washing (i.e., erosion) of the screen **3840**.

In an embodiment, a first end of a filter **530**, **2230** may be connected to a second end of the end cap **535**, **2235** via a connection; and a second end of a filter **530**, **2230** may be connected to a first end **515**, **2215** of the body **505**, **2205** via a connection. Any suitable connection may be used for the filter **41230**, **42230** and end cap **41235**, **42235**. For example, suitable connections include, but are not limited to, welds. Connections are well known in the art. In an embodiment, the first end of the filter **530**, **2230** may be connected to the second end of the end cap **535**, **2235** via a weld; and the second end of the filter **530**, **2230** may be connected to the first end **515**, **2215** of the body **505**, **2205** via a weld.

In an embodiment, the first end of the filter **530**, **2230** may fit into a first recess in the second end of the end cap **535**, **2235**; and the second end of the filter **530**, **2230** may fit into a second recess in the first end **515**, **2215** of the body **505**, **2205**. In an embodiment, the first recess and the second recess may be a plurality of recessed holes or a recessed groove. In an embodiment, the first recess and the second recess may be a plurality of recessed holes.

In an embodiment, the filter **530**, **2230** may be held together with a retaining ring. In an embodiment, the retaining ring may have a plurality of holes to hold the plurality of rods to form the filter **530**, **2230**. In an embodiment, the plurality of rods may be connected to the plurality of holes in the retainer ring via a connection. Any suitable connection may be used for the filter **530**, **2230** and retaining ring. For example, suitable connections include, but are not limited to, welds. Connections are well known in the art. In an embodiment, the plurality of rods may be connected to the plurality of holes in the retainer ring via a weld.

In an embodiment, the filter **530**, **2230**, including any retaining rings, of the drilling mud screen **3840** may be constructed of any suitable material. For example, suitable materials include, but are not limited to, any alloy steel. In an embodiment, the filter **530**, **2230** may be constructed of 304 stainless steel material. In an embodiment, the filter **530**, **2230** may have a hardened coating to reduce washing (i.e., erosion) of the screen **3840**.

In an embodiment, the end cap **535**, **2235** of the drilling mud screen **3840** has an outer surface. In an embodiment, the outer surface of the end cap **535**, **2235** of the drilling mud screen **3840** may redirect the flow to reduce washing (i.e., erosion) of the screen **3840**. In an embodiment, the outer

surface of the end cap **535**, **2235** of the drilling mud screen **3840** forms an inverted cone relative to the first end **515**, **2215** of the body **505**, **2205** of the drilling mud screen **3840** (i.e., an upstream pointing cone) to redirect the flow. In an embodiment, the tip of the inverted cone may have a rounded or squared shape.

In an embodiment, the body **505**, **2205** of the drilling mud screen **3840** has a centerline **545**, **2245**. In an embodiment, the centerline **545**, **2245** extends through the center of the drilling mud screen outlet **525**, **2225** to the end cap **535**, **2235**. In an embodiment, the centerline **545**, **2245** of the body **505**, **2205** of the drilling mud screen **3840** and the outer surface **555**, **2255** of the end cap **535**, **2235** form an angle **560**, **2260**. In an embodiment, the angle **560**, **2260** may be from about 30-degrees to about 90-degrees, and any range or value there between. In an embodiment, the angle **560**, **2260** may be from about 35-degrees to about 45-degrees.

In an embodiment, the end cap **535**, **2235** of the drilling mud screen **3840** may be constructed of any suitable material. For example, suitable materials include, but are not limited to, any alloy steel. In an embodiment, the end cap **535**, **2235** may be constructed of 304 stainless steel material. In an embodiment, the end cap **535**, **2235** of the drilling mud screen **3840** may have a hardened coating to reduce washing (i.e., erosion) of the screen **3840**. For example, suitable hardened coatings include, but are not limited to, any Carbide coating or equivalent. In an embodiment, the end cap **535**, **2235** may have a Carbide coating with about 6% Cobalt binder or equivalent material.

Method of Using Valve-Style Drilling Mud Screen System

FIG. **34** illustrates a flow diagram for a method of using a drilling mud screen system, as discussed above. As shown in FIG. **34**, the method of using a drilling mud system **3400** comprises stopping a drilling mud pump to stop flow of drilling mud **3405**, fluidly connecting a drilling mud inlet of a drilling mud screen system downstream of an outlet to the drilling mud pump **3410**, fluidly connecting a drilling mud outlet of the drilling mud screen system upstream of an outlet of a stand pipe **3415**, and starting the drilling mud pump to flow drilling mud through the drilling mud screen system **3420**. See also FIG. **10**.

In an embodiment, the drilling mud inlet **3020**, **3120**, **3220**, **3320** of the drilling mud screen system **3000**, **3100**, **3200**, **3300** may be fluidly connected to a high pressure outlet of the drilling mud pump via a connection. See also FIGS. **14**, **19**, **21**, **23** & **26**. The inlet pressure to the drilling mud inlet **3020**, **3120**, **3220**, **3320** of the drilling mud screen system **3000**, **3100**, **3200**, **3300** may be any suitable pressure. In an embodiment, the inlet pressure may be from about 7500 psi to about 10,000 psi, and any range or value there between.

In an embodiment, the drilling mud outlet **3025**, **3125**, **3225**, **3325** of the drilling mud screen system **3000**, **3100**, **3200**, **3300** may be fluidly connected to an inlet of a vibrator hose to the standpipe via a connection.

In an embodiment, the drilling mud inlet **3020**, **3120**, **3220**, **3320** of the drilling mud screen system **3000**, **3100**, **3200**, **3300** may be fluidly connected to an outlet of a vibrator hose to a standpipe via a connection. In an embodiment, the drilling mud outlet **3025**, **3125**, **3225**, **3325** of the drilling mud screen system **3000**, **3100**, **3200**, **3300** may be fluidly connected to an inlet of the standpipe via a connection.

In an embodiment, the drilling mud screen system **3000**, **3100**, **3200**, **3300** may be fluidly connected at any point in the standpipe via a connection.

Optional Monitoring Configuration

FIG. **35**A illustrates a flow diagram for a method of using a drilling mud screen system; and FIG. **35**B illustrates a flow diagram of optional steps for the method of FIG. **35**A, as discussed above.

As shown in FIGS. **35**A and **35**B, the method of using a drilling mud screen system **3500** comprises stopping a drilling mud pump to stop flow of drilling mud **3505**, fluidly connecting a drilling mud inlet of a drilling mud screen system downstream of an outlet to the drilling mud pump, and, optionally, fluidly connecting a first transducer to a first transducer access port of the drilling mud screen system (e.g., first transducer subassembly) and/or fluidly connecting a second transducer to a second transducer access port of the drilling mud screen system (e.g., second transducer subassembly) **3510**, fluidly connecting a drilling mud outlet of the drilling mud screen system upstream of an outlet of a stand pipe **3515**, and starting the drilling mud pump to flow drilling mud through the drilling mud screen system **3520**, and optionally, monitoring the first transducer and/or the second transducer for property information **3525**.

In an embodiment, step **3510** comprises fluidly connecting a first transducer to a first transducer access port of the drilling mud screen system (e.g., first transducer subassembly); and fluidly connecting a drilling mud inlet of a drilling mud screen system downstream of an outlet to the drilling mud pump.

In an embodiment, step **3510** comprises fluidly connecting a first transducer to a first transducer access port of the drilling mud screen system (e.g., first transducer subassembly); fluidly connecting a second transducer to a second transducer access port of the drilling mud system (e.g., second transducer subassembly); and fluidly connecting a drilling mud inlet of a drilling mud screen system downstream of an outlet to the drilling mud pump.

As shown in FIGS. **30**B and **31**B, the first transducer (not shown) may be fluidly connected to the first transducer access port **3032***a*, **3132***a* of the drilling mud screen system **3000**, **3100** (e.g., first transducer subassembly **30100***a*, **31100***a*) via a connection. Any suitable connection may be used for the first transducer (not shown). For example, suitable connections include, but are not limited to, pipe fittings. Connections are well known in the art. In an embodiment, the first transducer (not shown) may be fluidly connected to a first transducer access port **3032***a*, **3132***a* of the drilling mud screen system **3000**, **3100** (e.g., first transducer subassembly **30100***a*, **31100***a*) via a pipe fitting.

As shown in FIGS. **30**B and **31**B, the second transducer (not shown) may be fluidly connected to the second transducer access port **3032***b*, **3132***b* of the drilling mud screen system **3000**, **3100** (e.g., second transducer subassembly **30100***b*, **31100***b*) via a connection. Any suitable connection may be used for the second transducer (not shown). For example, suitable connections include, but are not limited to, pipe fittings. Connections are well known in the art. In an embodiment, the second transducer (not shown) may be fluidly connected to the second transducer access port **3032***b*, **3132***b* of the drilling mud screen system **3000**, **3100** (e.g., second transducer subassembly **30100***b*, **31100***b*) via a pipe fitting.

In an embodiment, the method of using a drilling mud screen system **3500** further comprises monitoring the first transducer (not shown) for property information (e.g., displacement, flow rate, pressure, and/or temperature) at the first transducer access port **3032***a*, **3132***a* of the drilling mud screen system **3000**, **3100** (e.g., first transducer subassembly **30100***a*, **31100***a*).

In an embodiment, the method of using a drilling mud screen system **3500** further comprises monitoring the first transducer (not shown) for property information (e.g., displacement, flow rate, pressure, and/or temperature) at the first transducer access port **3032***a*, **3132***a* of the drilling mud screen system **3000**, **3100** (e.g., first transducer subassembly **30100***a*, **31100***a*). In an embodiment, the first transducer (not shown) may be fluidly connected upstream of the drilling mud screen **3040**, **3140** of the drilling mud screen system **3000**, **3100**.

In an embodiment, the method of using a drilling mud screen system **3500** further comprises monitoring the second transducer (not shown) for property information (e.g., displacement, flow rate, pressure, and/or temperature) at the second transducer access port **3032***b*, **3132***b* of the drilling mud screen system **3000**, **3100** (e.g., second transducer subassembly **30100***b*, **31100***b*).

In an embodiment, the method of using a drilling mud screen system **3500** further comprises monitoring the second transducer (not shown) for property information (e.g., displacement, flow rate, pressure, and/or temperature) at the second transducer access port **3032***b*, **3132***b* of the drilling mud screen system **3000**, **3100** (e.g., second transducer subassembly **30100***b*, **31100***b*). In an embodiment, the second transducer (not shown) may be fluidly connected downstream of the drilling mud screen **3040**, **3140** of the drilling mud screen system **3000**, **3100**.

In an embodiment, a computing device (such as a rig computer) may include a bus that directly or indirectly couples the following devices: memory, one or more processors, one or more presentation components, one or more input/output (I/O) ports, I/O components, a user interface and a power supply. The computing device may include a variety of computer-readable media. The memory may include computer-storage media in the form of volatile and/or nonvolatile memory. The presentation component(s) present data indications to a user or other device. The user interface allows the user to input/output information to/from the computing device. The one or more I/O ports may allow the computing device to be logically coupled to other devices including a transducer **28105**, and other I/O components, some of which may be built in. See e.g., FIG. **28**. Examples of other I/O components include a printer, scanner, wireless device, and the like.

In an embodiment, the method of using a drilling mud screen system **3500** further comprises using the property information (e.g., displacement, flow rate, pressure, and/or temperature) from the first transducer (not shown) and/or the second transducer (not shown) to determine a status of the drilling mud screen system **3000**, **3100**, **3200**, **3300**. In an embodiment, the method further comprises using the information to determine when to clean, repair or replace the drilling mud screen **3040**, **3140**, **3240**, **3340** in the drilling mud screen system **3000**, **3100**, **3200**, **3330**.

In an embodiment, pressure information from, for example, a second pressure transducer (not shown) will allow a driller to know when a drilling mud screen **3040**, **3140**, **3240**, **3340** in a drilling mud screen system **3000**, **3100**, **3200**, **3300** is "packing off" For example, the pressure information from the second pressure transducer (not shown) at the second transducer access port **3032***b*, **3132***b* of the drilling mud screen system **3000**, **3100** (e.g., second transducer subassembly **30100***b*, **31100***b*) may be compared to, for example, pressure information from a pressure transducer on a pressure transducer assembly for a stand pipe. If the pressure decreases at the stand pipe and the pressure increases at the second transducer access port **3032***b*, **3132***b* of the drilling mud screen system **3000**, **3100** (e.g., second transducer subassembly **30100***b*, **31100***b*), the drilling mud screen **3040**, **3140** is likely "packing off." If the pressure decreases or increases at both the stand pipe and the drilling mud screen system **3000**, **3100** (e.g., second transducer subassembly **30100***b*, **31100***b*), then the problem is likely down hole and not at the drilling mud screen system **3000**, **3100**. If the problem is at the drilling mud screen system **3000**, **3100**, the drilling mud screen **3040**, **3140** may be cleaned, repaired or replaced.

Method of Removing and Replacing Drilling Mud Screen for Improved Drilling Mud Screen System

FIG. **36** illustrates a method of removing and replacing a drilling mud screen in a drilling mud screen system, as discussed above. As shown in FIG. **36**, the method of removing and replacing a drilling mud screen **3600** comprises stopping a drilling mud pump connected to a drilling mud screen system **3605**, rotating a rotating subassembly to open the drilling mud screen system **3610**, accessing the interior of the drilling mud screen system to remove a drilling mud screen from the drilling mud screen system and to install a replacement drilling mud screen into the drilling mud screen system **3615**, rotating the rotating subassembly to close and seal the drilling mud screen system **3620**, and operating the drilling mud pump to produce flow of drilling mud through the replacement drilling mud screen of the drilling mud screen system **3525**. See also FIG. **11**.

Method of Removing and Replacing Drilling Mud Screen for Alternative Improved Drilling Mud Screen System

FIG. **39** illustrates a method of removing and replacing a drilling mud screen in a four-piece drilling mud screen system, as discussed above. As shown in FIG. **39**, the method of removing and replacing a drilling mud screen **3900** comprises stopping a drilling mud pump connected to the trapdoor-style drilling mud screen system **3905**, rotating a rotating trapdoor subassembly to open the drilling mud screen system **3910**, accessing the interior of the drilling mud screen system to remove a drilling mud screen from the drilling mud screen system and to install a replacement drilling mud screen into the drilling mud screen system **3915**, rotating the rotating trapdoor sub assembly to close and seal the drilling mud screen system **3920**, and operating the drilling mud pump to produce flow of drilling mud through the replacement drilling mud screen of the drilling mud screen system **3925**.

In the foregoing description of certain embodiments, specific terminology has been resorted to for the sake of clarity. However, the disclosure is not intended to be limited to the specific terms so selected, and it is to be understood that each specific term includes other technical equivalents which operate in a similar manner to accomplish a similar technical purpose. Terms (e.g., "outer" and "inner," "upper" and "lower," "first" and "second," "internal" and "external," "above" and "below" and the like) are used as words of convenience to provide reference points and, as such, are not to be construed as limiting terms.

The embodiments set forth herein are presented to best explain the present invention and its practical application and to thereby enable those skilled in the art to make and utilize the invention. However, those skilled in the art will recognize that the foregoing description has been presented for the purpose of illustration and example only. The description as set forth is not intended to be exhaustive or to limit the invention to the precise form disclosed. Many modifications and variations are possible in light of the above teaching without departing from the spirit and scope of the following claims.

Also, the various embodiments described above may be implemented in conjunction with other embodiments, e.g., aspects of one embodiment may be combined with aspects of another embodiment to realize yet other embodiments. Further, each independent feature or component of any given assembly may constitute an additional embodiment.

Definitions

As used herein, the terms "a," "an," "the," and "said" mean one or more, unless the context dictates otherwise.

As used herein, the term "about" means the stated value plus or minus a margin of error plus or minus 10% if no method of measurement is indicated.

As used herein, the term "or" means "and/or" unless explicitly indicated to refer to alternatives only or if the alternatives are mutually exclusive.

As used herein, the terms "comprising," "comprises," and "comprise" are open-ended transition terms used to transition from a subject recited before the term to one or more elements recited after the term, where the element or elements listed after the transition term are not necessarily the only elements that make up the subject.

As used herein, the terms "containing," "contains," and "contain" have the same open-ended meaning as "comprising," "comprises," and "comprise," provided above.

As used herein, the terms "having," "has," and "have" have the same open-ended meaning as "comprising," "comprises," and "comprise," provided above.

As used herein, the terms "including," "includes," and "include" have the same open-ended meaning as "comprising," "comprises," and "comprise," provided above.

As used herein, the phrase "consisting of" is a closed transition term used to transition from a subject recited before the term to one or more material elements recited after the term, where the material element or elements listed after the transition term are the only material elements that make up the subject.

As used herein, the term "simultaneously" means occurring at the same time or about the same time, including concurrently.

INCORPORATION BY REFERENCE

All patents and patent applications, articles, reports, and other documents cited herein are fully incorporated by reference to the extent they are not inconsistent with this invention.

What is claimed is:

1. A trapdoor-style drilling mud screen system, comprising:

(a) a first body having a first portion, a second portion and a third portion;

(b) a first drilling mud inlet at a first end of the first portion of the first body;

(c) a first drilling mud outlet at a second end of the third portion of the first body;

(d) a rotating trapdoor subassembly, wherein the rotating trapdoor subassembly is disposed within the second portion of the first body, wherein the first portion of the first body is fluidly connected to a first end of the rotating subassembly, and wherein a second end of the rotating subassembly is fluidly connected to the third portion of the first body;

(e) a pivot subassembly, wherein the pivot subassembly is disposed through the rotating trapdoor subassembly and through the second portion of the first body; and

(f) a drilling mud screen, wherein the drilling mud screen is disposed within the rotating trapdoor subassembly between the first drilling mud inlet and the first drilling mud outlet.

2. The drilling mud screen system of claim **1**, wherein the rotating trapdoor subassembly comprises:

(a) a second body, wherein a first end of the second body is fluidly connected to a second end of the first portion of the first body and wherein a second end of the second body is fluidly connected to a first end of the third portion of the first body.

3. The drilling mud screen system of claim **1**, wherein the pivot subassembly comprises:

(a) a pivot shaft; and

(b) a retaining ring, wherein the retaining ring retains the pivot shaft through the second portion of the first body.

4. The drilling mud screen system of claim **1**, wherein the first portion of the first body comprises a first piston.

5. The drilling mud screen system of claim **4** further comprising a piston guide bar disposed through the first portion of the first body and into a portion of the first piston, wherein the piston guide bar guides a second end of the first piston to engage a first end of the rotating trapdoor subassembly when the rotating trapdoor subassembly is in a closed position.

6. The drilling mud screen system of claim **4** further comprising a piston guide bar disposed through the first portion of the first body and into a portion of the first piston, wherein the piston guide bar locks a second end of the first piston to contact and seal a first end of the rotating trapdoor subassembly when the rotating trapdoor subassembly is in a closed position.

7. The drilling mud screen system of claim **4** further comprising a piston guide bar disposed through the first portion of the first body first body and into a portion of the first piston, wherein the piston guide bar guides a second end of the first piston to disengage from a first end of the rotating trapdoor subassembly when the rotating trapdoor subassembly is in an open position.

8. The drilling mud screen system of claim **4** further comprising a piston guide bar disposed through the first portion of the first body and into a portion of the first piston, wherein the piston guide bar separates a second end of the first piston to disengage and create a gap from a first end of the rotating trapdoor subassembly when the rotating trapdoor subassembly is in the open position to avoid damage to a first seal face at the second end of the first piston and/or the second seal face at the first end of the rotating trapdoor subassembly.

9. The drilling mud screen system of claim **4**, wherein the piston guide bar further comprises a ball bearing for smooth operation.

10. The drilling mud screen system of claim **4** further comprising:

(a) a first spring, wherein the first spring is disposed between the first piston and a first subassembly, wherein the first subassembly comprises:

i. a second body having a first end and a second end;

ii. a second drilling mud inlet at the first end of the second body; and

iii. a second drilling mud outlet at the second end of the second body,

wherein the second end of the second body is fluidly connected to the first end of the first portion of the first body.

11. The drilling mud screen system of claim 10, wherein the second end of the first piston has a first seal face and wherein the first end of the rotating trapdoor subassembly has a second seal face.

12. The drilling mud screen system of claim 4, wherein the third portion of the first body comprises a second piston.

13. The drilling mud screen system of claim 12 further comprising:

(a) a second spring, wherein the second spring is disposed between the second piston and a second subassembly, wherein the second subassembly comprises:
   i. a third body having a first end and a second end;
   ii. a third drilling mud inlet at the first end of the third body;
   iii. a third drilling mud outlet at the second end of the third body, wherein the second end of the third portion of the first body is fluidly connected to the first end of the third body.

14. The drilling mud screen system of claim 13, wherein the second end of the rotating trapdoor subassembly has a third seal face and wherein the first end of the second piston has a fourth seal face.

15. The drilling mud screen system of claim 4, further comprising a threaded lock ring, wherein the threaded lock ring is disposed around the first portion of the first body and the first end of the trapdoor subassembly.

16. The drilling mud screen system of claim 15, wherein the threaded lock ring further comprises a handle.

17. The drilling mud screen system of claim 4 further comprising a threaded lock ring, wherein the threaded lock ring is disposed around a first portion of the body and a first end of the rotating trapdoor subassembly to lock the trapdoor subassembly in a closed position.

18. The drilling mud screen system of claim 4 further comprising a piston guide bar disposed through a first slot in the first portion of the first body or the second portion of the body, and into a second slot in the first piston, wherein the piston guide bar guides a second end of the first piston to engage a first end of the rotating trapdoor subassembly when the rotating trapdoor subassembly is in a closed position.

19. The drilling mud screen system of claim 4 further comprising a piston guide bar disposed through a first slot in the first portion of the first body or the second portion of the body, and into a second slot of the first piston, wherein the piston guide bar locks a second end of the first piston to contact and seal a first end of the rotating trapdoor subassembly when the rotating trapdoor subassembly is in a closed position.

20. The drilling mud screen system of claim 1, wherein the drilling mud screen comprises:

(a) a second body having a first end and a second end and a first centerline;
(b) a filter having a first end, a second end, and openings, wherein the first end of the filter is fluidly connected to the first end of the second body via a first connection and/or a first end retaining ring;
(c) an end cap fluidly connected at the second end of the filter via a second connection, wherein the filter has a retaining ring disposed between the first connection and the second connection;
(d) a second drilling mud inlet at the first end of the second body; and
(e) a second drilling mud outlet at the openings of the filter.

21. The drilling mud screen system of claim 20, wherein the filter comprises a plurality of rods having a first end and a second end, wherein each of the plurality of rods are spaced a distance apart to form the openings in the filter.

22. The drilling mud screen system of claim 21, wherein each of the plurality of rods are tapered from the first end to the second end.

23. The drilling mud screen system of claim 20, wherein the filter comprises a formed sheet having drilled holes or slots spaced a distance apart to form the openings in the filter.

24. The drilling mud screen system of claim 23, wherein the drilled holes or slots are drilled in offset rows or straight rows from the first end to the second end.

25. The drilling mud screen system of claim 20, wherein the filter is tapered from the first end to the second end.

26. The drilling mud screen system of claim 20, wherein the end cap is a flat plate or a flat plate with holes or slots.

27. The drilling mud screen of claim 20, wherein the end cap is an inverted cone or an inverted cone with holes or slots.

28. The drilling mud screen system of claim 20, wherein the first centerline of the second body and an outer surface of the end cap forms a cap angle, wherein the cap angle is from about 30-degrees to about 90-degrees.

29. The drilling mud screen system of claim 20, wherein the first centerline of the second body and an outer surface of the end cap forms a cap angle, wherein the cap angle is from about 35-degrees to about 45-degrees.

30. The drilling mud screen system of claim 20, wherein the filter, the first end retaining ring and/or the retaining ring are constructed from AISI 4145 or equivalent, stainless steel or combinations thereof.

31. The drilling mud screen system of claim 20, wherein the filter, the first end retaining ring and/or the retaining ring has a hardened coating.

32. The drilling mud screen system of claim 20, wherein one or more of the filter, the first end retaining ring and/or the retaining ring has a Carbide coating with about 6% Cobalt binder.

33. The drilling mud screen system of claim 20, wherein one or more of the first body and the second body are constructed from AISI 4130/75k or equivalent material, AISI 4145 or equivalent, or combinations thereof.

34. The drilling mud screen system of claim 1, wherein the drilling mud screen comprises:

(a) a second body having a first end and a second end and a first centerline;
(b) a filter having a first end and a second end, and openings, wherein the second end of the filter is fluidly connected to the first end of the second body via a first connection and/or a second end retaining ring;
(c) an end cap fluidly connected at the first end of the filter via a second connection, wherein the filter has a retaining ring disposed between the first connection and the second connection;
(d) a second drilling mud inlet at the openings of the filter; and
(e) a second drilling mud outlet at the second end of the second body.

35. The drilling mud screen system of claim 34, wherein the filter comprises a plurality of rods having a first end and a second end, wherein each of the plurality of rods are spaced a distance apart to form the openings in the filter.

36. The drilling mud screen system of claim 35, wherein each of the plurality of rods are tapered from the first end to the second end.

37. The drilling mud screen system of claim **34**, wherein the filter comprises a formed sheet having drilled holes or slots spaced a distance apart to form the openings in the filter.

38. The drilling mud screen system of claim **37**, wherein the drilled holes or slots are drilled in offset rows or straight rows from the first end to the second end.

39. The drilling mud screen system of claim **34**, wherein the filter is tapered from the second end to the first end.

40. The drilling mud screen system of claim **34**, wherein the end cap is a flat plate or a flat plate with holes or slots.

41. The drilling mud screen of claim **34**, wherein the end cap is a cone or a cone with holes or slots.

42. The drilling mud screen system of claim **34**, wherein the first centerline of the second body and an outer surface of the end cap forms a cap angle, wherein the cap angle is from about 30-degrees to about 90-degrees.

43. The drilling mud screen system of claim **34**, wherein the first centerline of the second body and an outer surface of the end cap forms a cap angle, wherein the cap angle is from about 35-degrees to about 45-degrees.

44. The drilling mud screen system of claim **34**, wherein the filter, the second end retaining ring and/or the retaining ring are constructed from AISI 4145 or equivalent, stainless steel or combinations thereof.

45. The drilling mud screen system of claim **34**, wherein the filter, the second end retaining ring and/or the retaining ring has a hardened coating.

46. The drilling mud screen system of claim **34**, wherein one or more of the filter, the second end retaining ring and/or the retaining ring has a Carbide coating with about 6% Cobalt binder.

47. The drilling mud screen system of claim **34**, wherein one or more of the first body, and the second body are constructed from AISI 4130/75k or equivalent material, AISI 4145 or equivalent, or combinations thereof.

48. A method of installing a trapdoor-style drilling mud screen system comprising:

(a) stopping a drilling mud pump to fluidly connect the drilling mud screen system of claim **1** to the drilling mud pump;

(b) fluidly connecting the drilling mud screen system m line with and immediately upstream or downstream of the drilling mud pump; and

(c) operating the drilling mud pump to produce flow of drilling mud through the drilling mud screen system.

49. The method of claim **48**, wherein step b) comprises fluidly connecting a drilling mud inlet of the drilling mud screen system to a high-pressure outlet of the drilling mud pump and fluidly connecting a drilling mud outlet of the drilling mud screen system to a vibrator hose or a standpipe.

50. The method of claim **48**, wherein step b) comprises fluidly connecting a drilling mud inlet of the drilling mud screen system to a high-pressure inlet of the drilling mud pump and fluidly connecting a drilling mud outlet of the drilling mud screen system to an inlet of a vibrator hose.

51. The method of claim **48**, wherein step b) comprises fluidly connecting a drilling mud inlet of the drilling mud screen system to an outlet of a vibrator hose and a drilling mud outlet to an inlet of a standpipe.

52. The method of claim **48**, wherein step b) comprises fluidly connecting a drilling mud inlet of the drilling mud screen system to an outlet of a first portion of a standpipe and a drilling mud outlet of the drilling mud screen system to an inlet of a second portion of the standpipe.

53. The method of claim **48**, further comprising step d) filtering or screening debris from drilling mud.

54. A method of removing and replacing a drilling mud screen comprising:

(a) stopping a drilling mud pump connected to the drilling mud screen system of claim **1**;

(b) rotating a rotating trapdoor subassembly to open the drilling mud screen system;

(c) removing the drilling mud screen;

(d) installing a replacement drilling mud screen;

(e) rotating the rotating trapdoor subassembly to close and seal the drilling mud screen system; and

(f) operating the drilling mud pump to produce flow of drilling mud through the drilling mud screen system.

55. The method of claim **54**, wherein step b) comprises: step b-1) removing a piston guide bar and/or a threaded lock ring and step b-2) rotating the rotating trapdoor subassembly to open the drilling mud screen system.

56. The method of claim **54**, wherein step d) comprises: step d-1) rotating the trapdoor subassembly to close the drilling mud screen system and step d-2) installing a piston guide bar and/or a threaded lock ring to seal the drilling mud screen system.

57. The method of claim **54**, wherein step b) comprises: step b-1) removing a piston guide bar and/or a threaded lock ring and step b-2) rotating the rotating trapdoor subassembly to open the drilling mud screen system, and wherein step d) comprises: step d-1) rotating the trapdoor subassembly to close the drilling mud screen system and step d-2) installing a piston guide bar and/or a threaded lock ring to seal the drilling mud screen system.

* * * * *