US012386273B2

(12) **United States Patent**
Schreuder et al.

(10) **Patent No.: US 12,386,273 B2**
(45) **Date of Patent: Aug. 12, 2025**

(54) **SUBSTRATE HOLDER, LITHOGRAPHIC APPARATUS AND METHOD**

(71) Applicant: **ASML NETHERLANDS B.V.**, Veldhoven (NL)

(72) Inventors: **André Schreuder**, Eindhoven (NL); **Gijs Kramer**, Nijmegen (NL); **Ludolf Postma**, Nijmegen (NL)

(73) Assignee: **ASML NETHERLANDS B.V.**, Veldhoven (NL)

(*) Notice: Subject to any disclaimer, the term of this patent is extended or adjusted under 35 U.S.C. 154(b) by 435 days.

(21) Appl. No.: **17/636,411**

(22) PCT Filed: **Jul. 7, 2020**

(86) PCT No.: **PCT/EP2020/069109**
§ 371 (c)(1),
(2) Date: **Feb. 18, 2022**

(87) PCT Pub. No.: **WO2021/032356**
PCT Pub. Date: **Feb. 25, 2021**

(65) **Prior Publication Data**

US 2022/0283505 A1 Sep. 8, 2022

(30) **Foreign Application Priority Data**

Aug. 20, 2019 (EP) 19192576
Dec. 20, 2019 (EP) 19219048

(51) **Int. Cl.**
G03F 7/00 (2006.01)
H01L 21/687 (2006.01)

(52) **U.S. Cl.**
CPC ***G03F 7/707*** (2013.01); ***G03F 7/70525*** (2013.01); ***H01L 21/6875*** (2013.01)

(58) **Field of Classification Search**
CPC . G03F 7/707; G03F 7/70525; H01L 21/6875; H01L 21/68735; H01L 21/687; H01L 21/68714
See application file for complete search history.

(56) **References Cited**

U.S. PATENT DOCUMENTS

6,952,253 B2 10/2005 Lof et al.
8,659,741 B2 2/2014 De Graaf et al.
(Continued)

FOREIGN PATENT DOCUMENTS

CN 101916050 12/2010
JP 4-64216 2/1992
(Continued)

OTHER PUBLICATIONS

Anonymous, "Active Tuning of the Wafer Edge Flatness Between Measurement and Exposure", Research Disclosure, Database No. 535021 (Nov. 2008).
(Continued)

Primary Examiner — Christopher J. Besler
(74) *Attorney, Agent, or Firm* — Pillsbury Winthrop Shaw Pittman LLP

(57) **ABSTRACT**

A substrate holder for supporting a substrate, a lithographic apparatus having the substrate holder and a method of supporting the substrate. The substrate holder includes a main body, a plurality of supporting pins, and a plate. The plate is positioned between a surface of the main body and a support surface formed by the plurality of supporting pins. The plate is actuatable in a direction along the plurality of supporting pins between the surface of the main body and the support surface. The substrate holder may also include a main body, a flexible member and a fixed member protruding from a surface of the main body. The flexible member defines an enclosed cavity therein and configured to form a seal with the substrate supported on the substrate holder. The
(Continued)

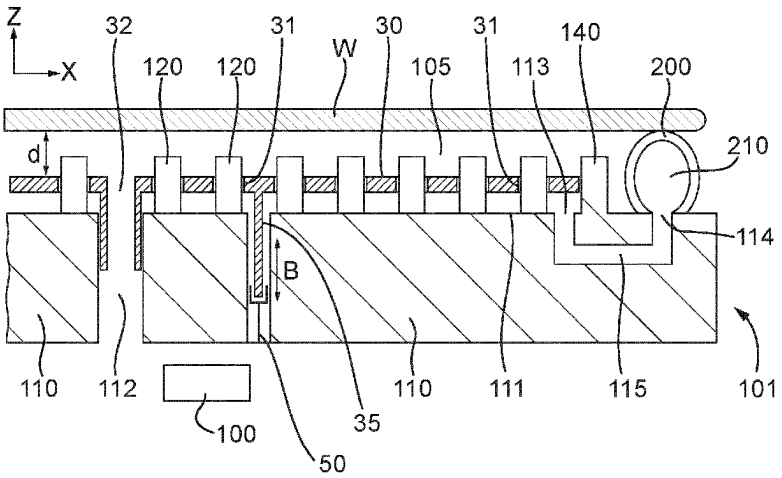

substrate holder is configured to reduce pressure in the enclosed cavity of the flexible member.

20 Claims, 9 Drawing Sheets

(56) **References Cited**

U.S. PATENT DOCUMENTS

2005/0286032	A1	12/2005	Lof et al.
2006/0119817	A1	6/2006	Marie Hennus et al.
2007/0182943	A1	8/2007	Goodwin et al.
2008/0165331	A1	7/2008	Jacobs et al.
2008/0186460	A1	8/2008	Auer-Jongepier et al.
2009/0179366	A1	7/2009	Herchen et al.
2011/0013169	A1	1/2011	Lafarre et al.
2011/0116060	A1	5/2011	Dziomkina et al.
2011/0199592	A1	8/2011	De Graff et al.
2011/0228238	A1	9/2011	Roset et al.
2011/0292369	A1	12/2011	Lafarre et al.
2013/0077065	A1	3/2013	Lafarre et al.
2013/0146785	A1	6/2013	Gilissen et al.
2014/0091537	A1	4/2014	Iizuka et al.
2016/0225650	A1*	8/2016	Komine H01L 21/68735
2017/0053822	A1	2/2017	Ben Natan et al.
2017/0363948	A1	12/2017	Rops et al.
2018/0107107	A1	4/2018	Kramer et al.
2018/0193983	A1	7/2018	Ishino et al.
2019/0080955	A1	3/2019	Lee et al.

FOREIGN PATENT DOCUMENTS

JP	2013-004612	1/2013
JP	2016-143706	8/2016
JP	2019-114590	7/2019
KR	2007-0109005	11/2007
KR	2018-0069383	6/2018
TW	201632241	9/2016
WO	2008/156366	12/2008
WO	2017/102162	6/2017
WO	2017/137129	8/2017
WO	2017/086333	11/2017
WO	2019/064577	4/2019
WO	2019/163214	8/2019

OTHER PUBLICATIONS

International Search Report dated Oct. 9, 2020, issued in corresponding International Application No. (3 pgs.).

Written Opinion of the International Searching Authority dated Oct. 9, 2020, issued in corresponding International Application No. PCT/EP2020/069109 (6 pgs.).

Office Action dated Jun. 16, 2021, issued in corresponding Taiwanese Patent Application No. 109125042 with English translation (3 pgs.).

Office Action issued in Japanese Patent Application No. 2022506590, dated Aug. 22, 2024.

* cited by examiner

Fig. 1

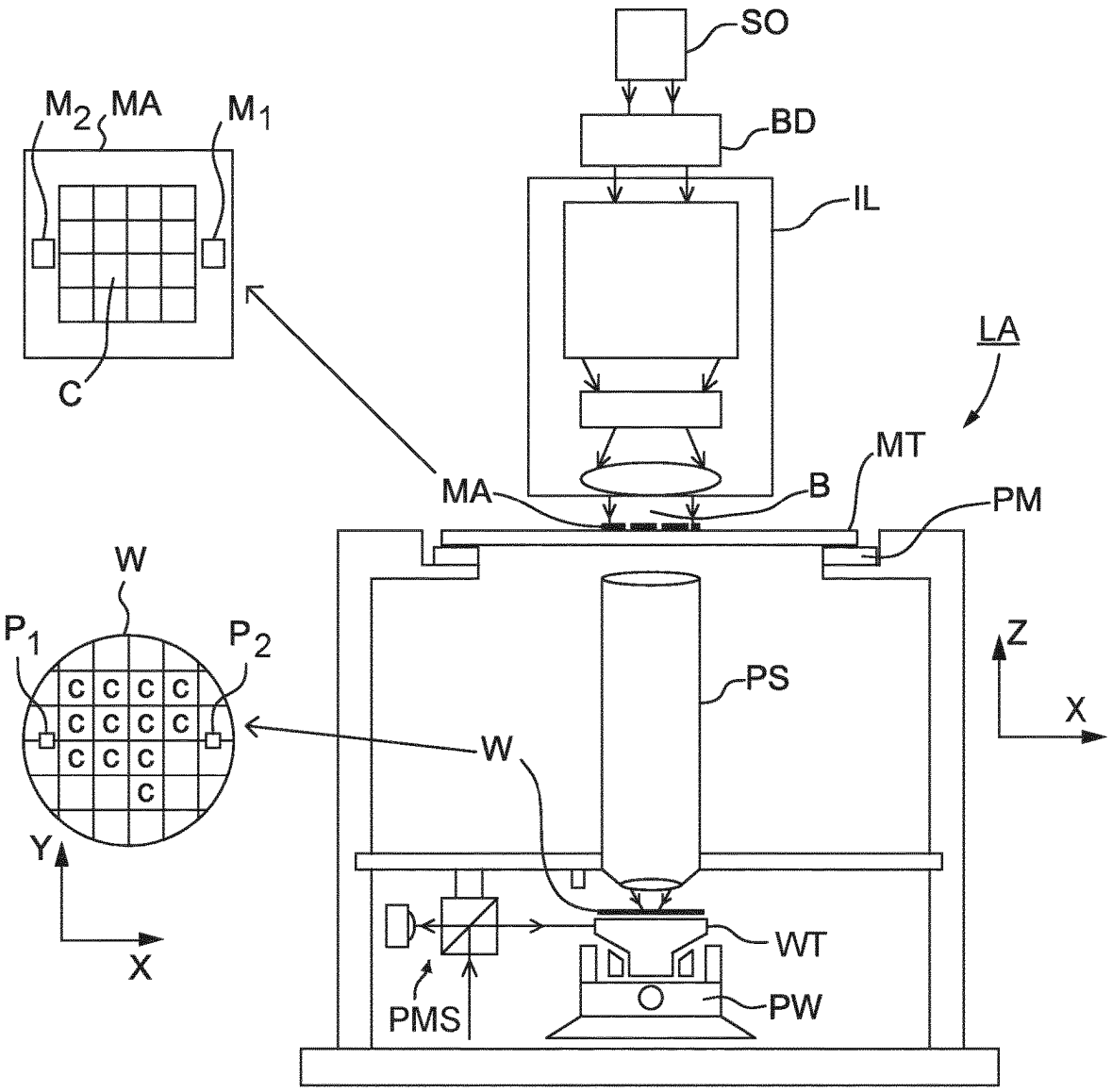

Fig. 2

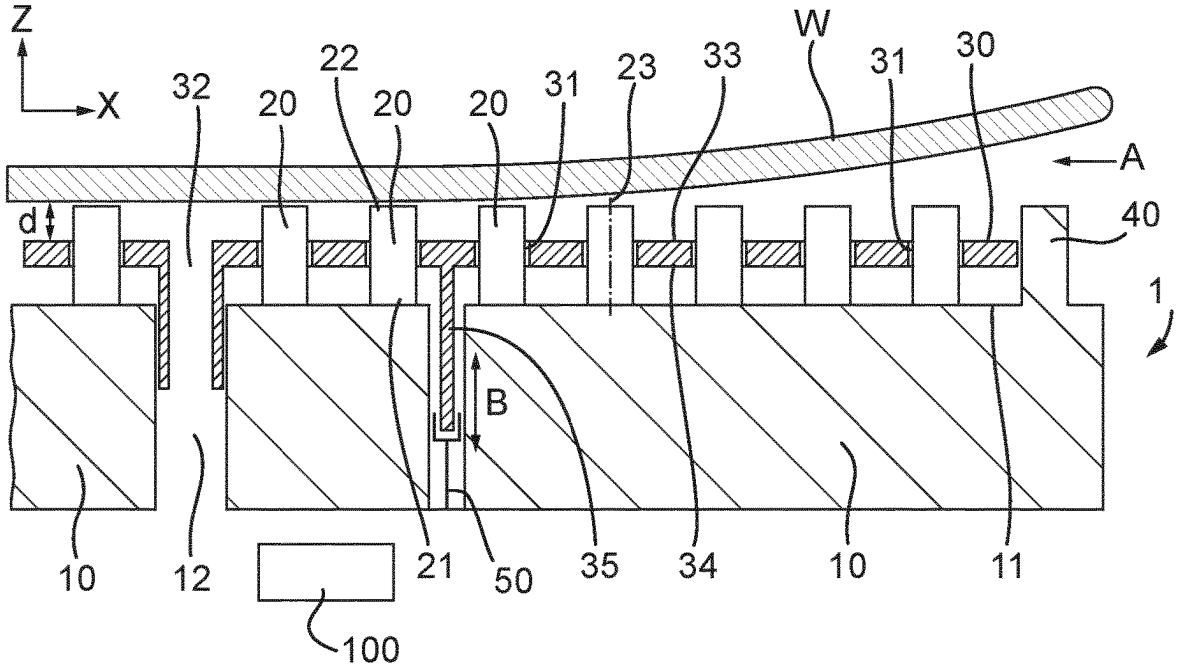
Z
X
32
20
22
20
20
31
23
33
W
31
30
A
d
40
1
B
10
12
21
50
35
34
10
11
100

Fig. 3

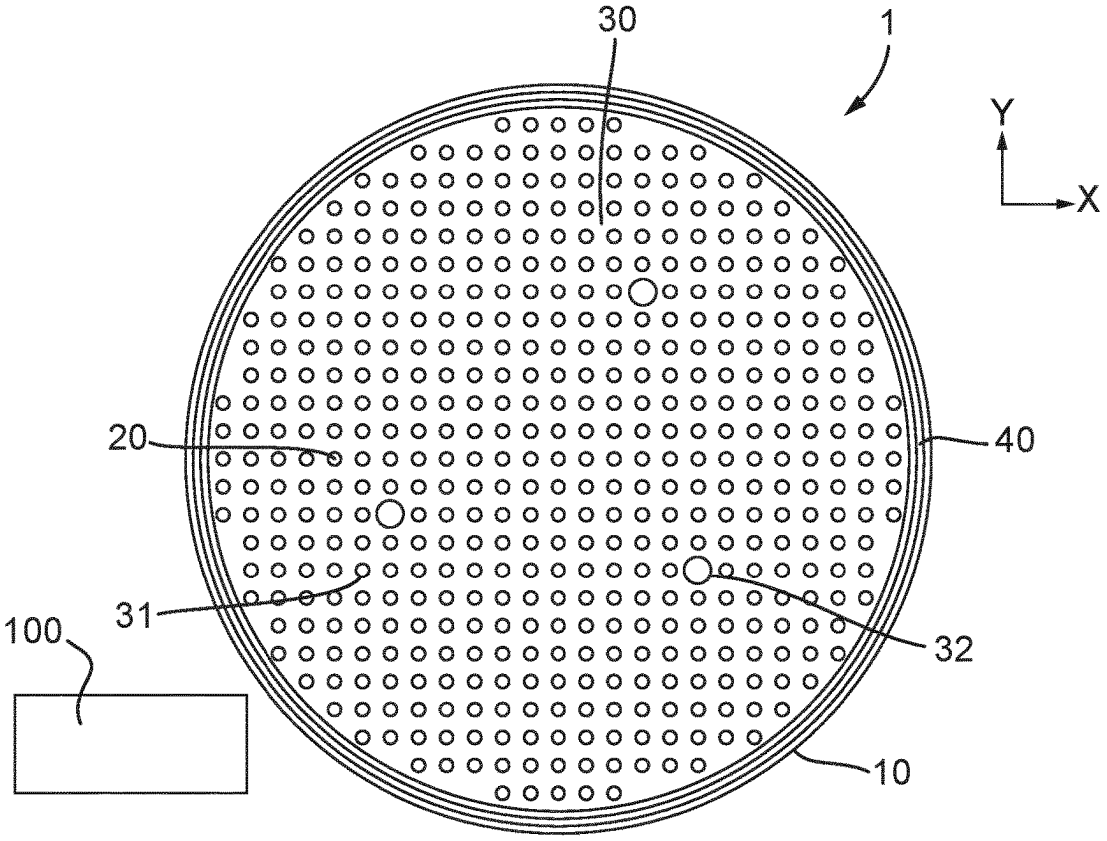
30
1
Y
X
20
40
31
32
100
10

Fig. 4

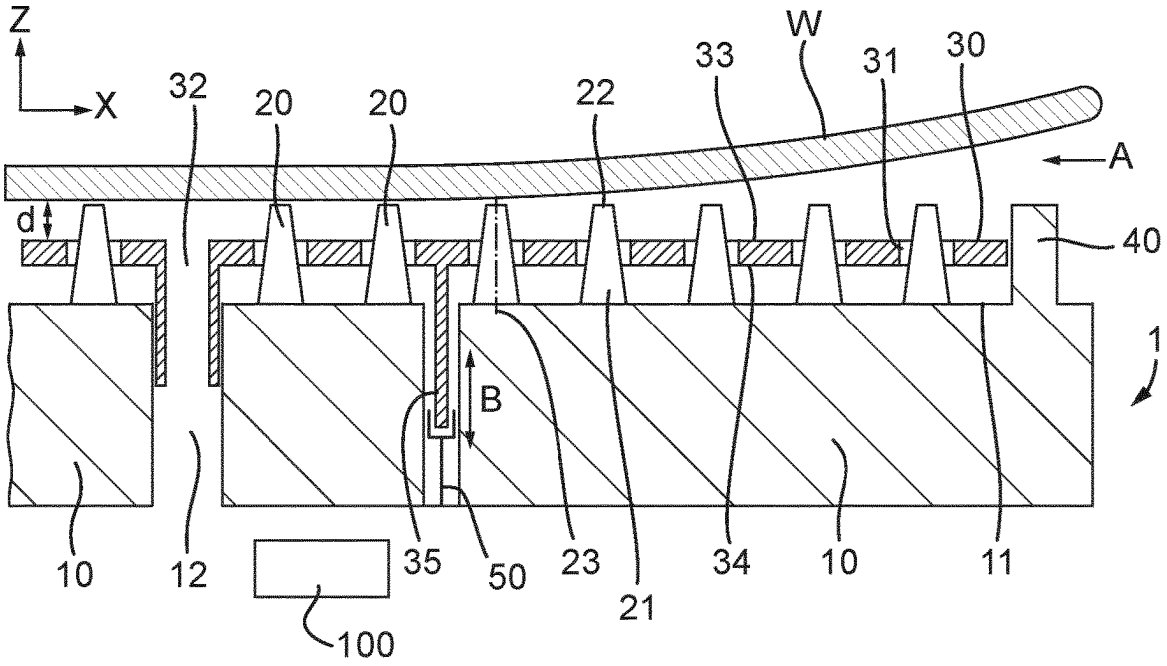
Z
X
32
20
20
22
33
W
31
30
A
d
40
1
B
10
12
35
50
23
21
34
10
11
100

Fig. 5

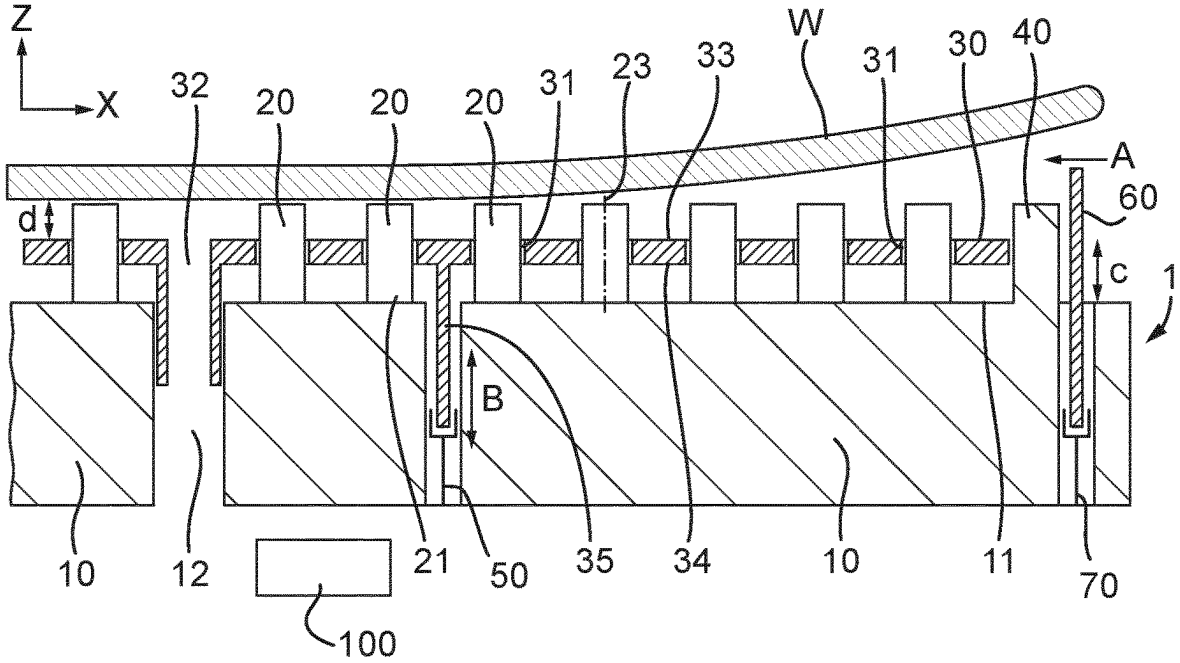
Z
X
32
20
20
20
31
23
33
W
31
30
40
A
60
d
c
1
B
10
12
21
50
35
34
10
11
70
100

Fig. 6

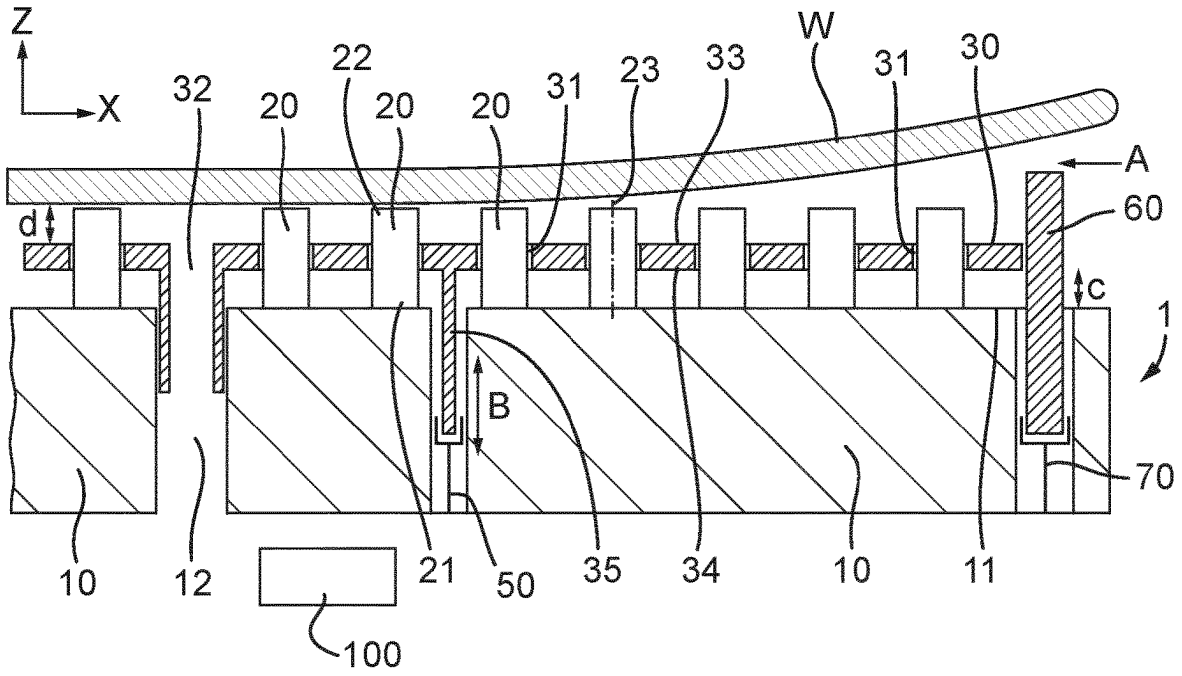
Z
X
32
20
22
20
20
31
23
33
W
31
30
A
60
d
c
1
B
70
10
12
21
50
35
34
10
11
100

Fig. 7A

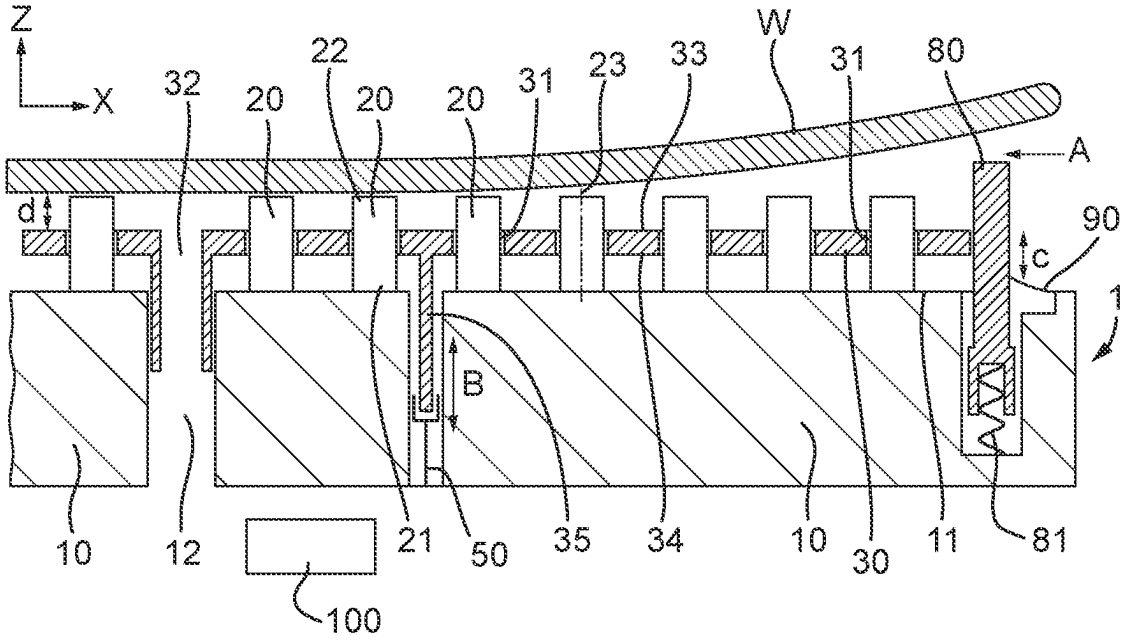
Z
X
32
20
22
20
20
31
23
33
W
31
80
A
d
c
90
1
B
10
12
21
50
35
34
10
30
11
81
100

Fig. 7B

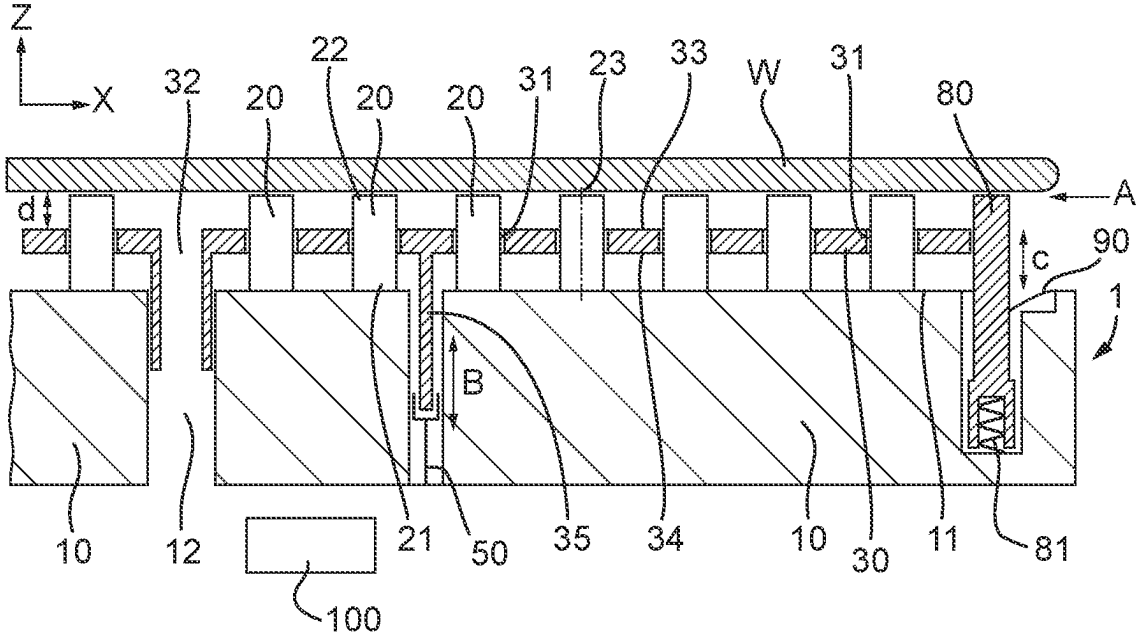
Z
X
32
20
22
20
20
31
23
33
W
31
80
A
d
c
90
1
B
10
12
21
50
35
34
10
30
11
81
100

Fig. 8A

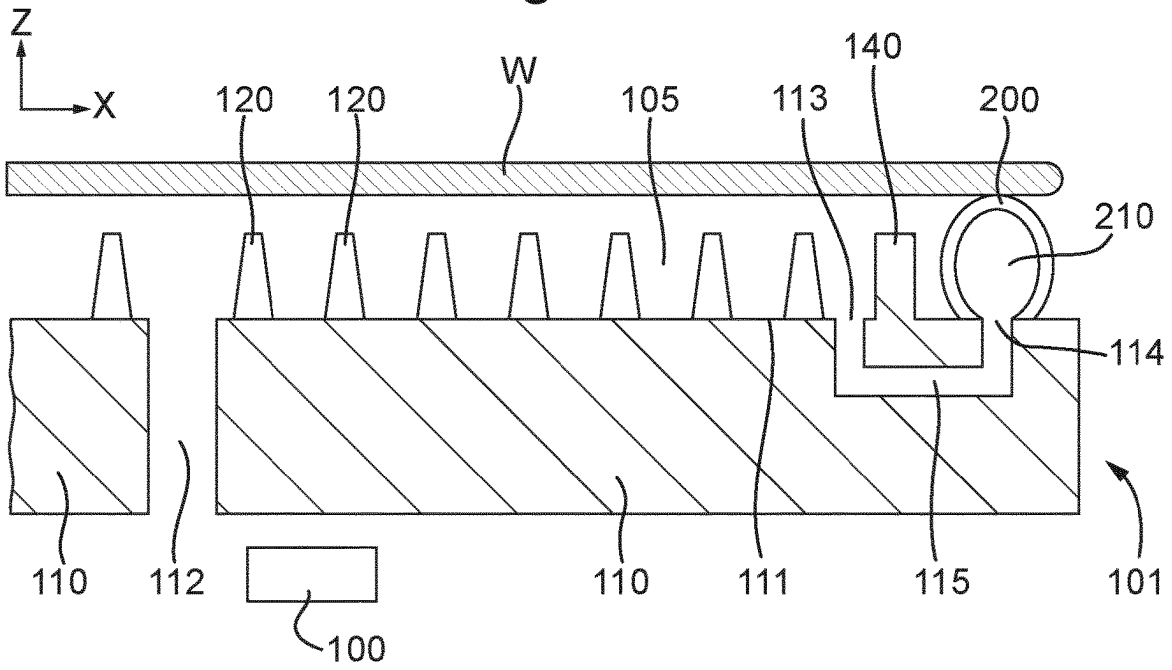
Z
X
120
120
W
105
113
140
200
210
114
110
112
110
111
115
101
100

Fig. 8B

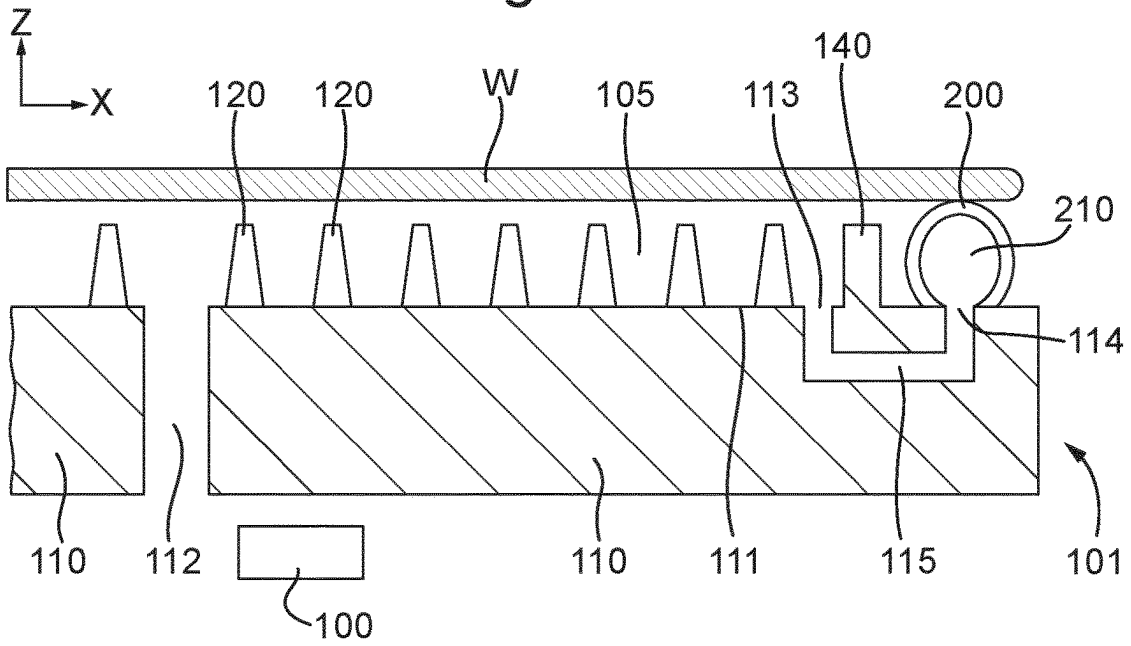
Z
X
120
120
W
105
113
140
200
210
114
110
112
110
111
115
101
100

Fig. 8C

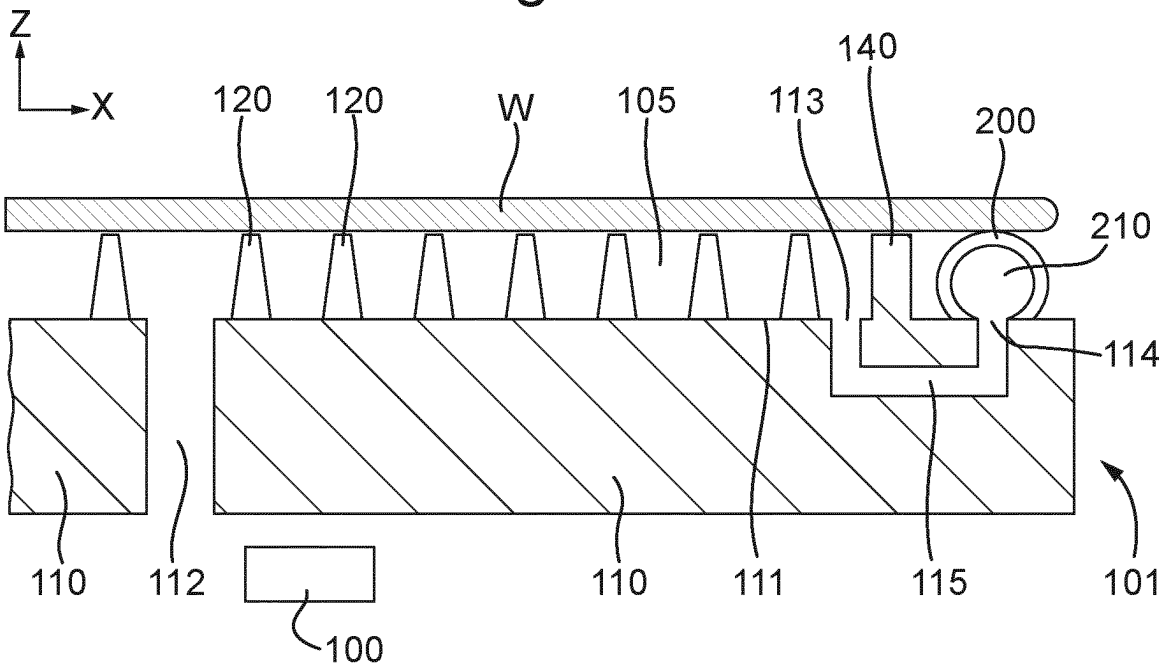
Z
X
120
120
W
105
113
140
200
210
114
110
112
110
111
115
101
100

Fig. 8D

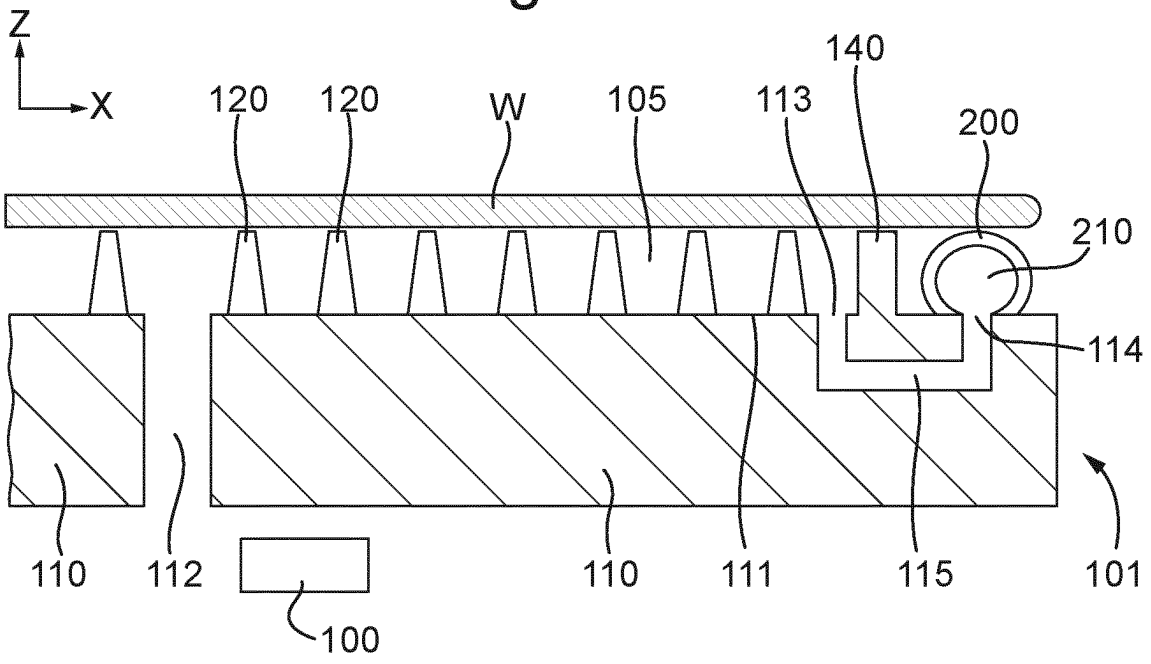
Z
X
120
120
W
105
113
140
200
210
114
110
112
110
111
115
101
100

Fig. 9

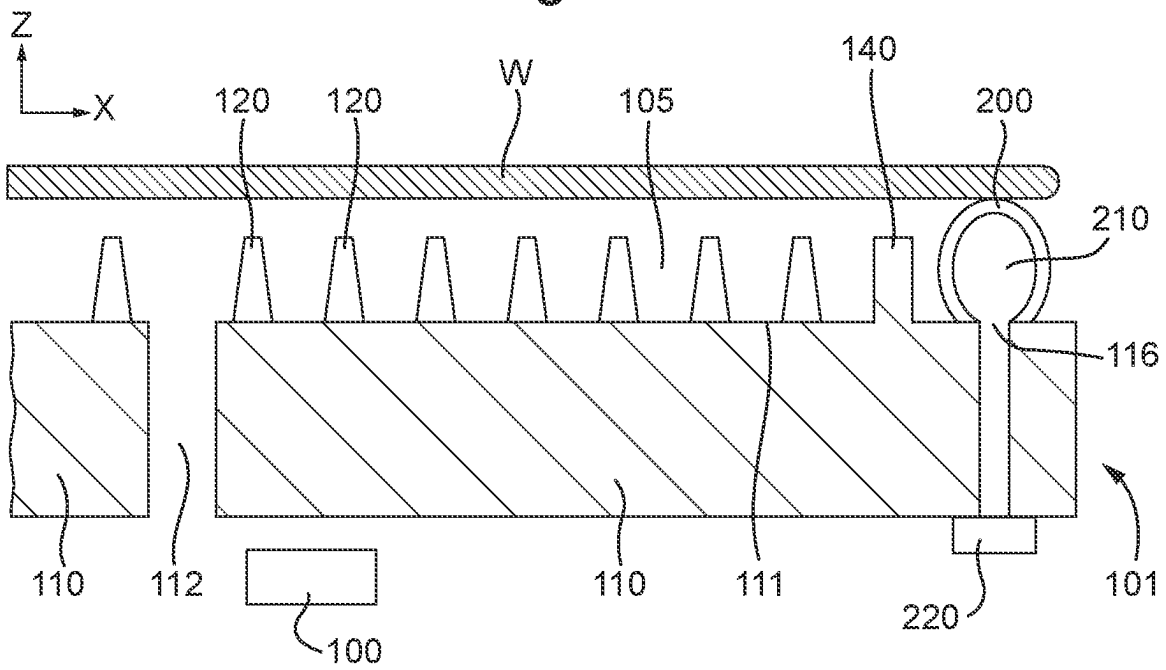
Z
X
120
120
W
105
140
200
210
116
110
112
110
111
220
101
100

Fig. 10

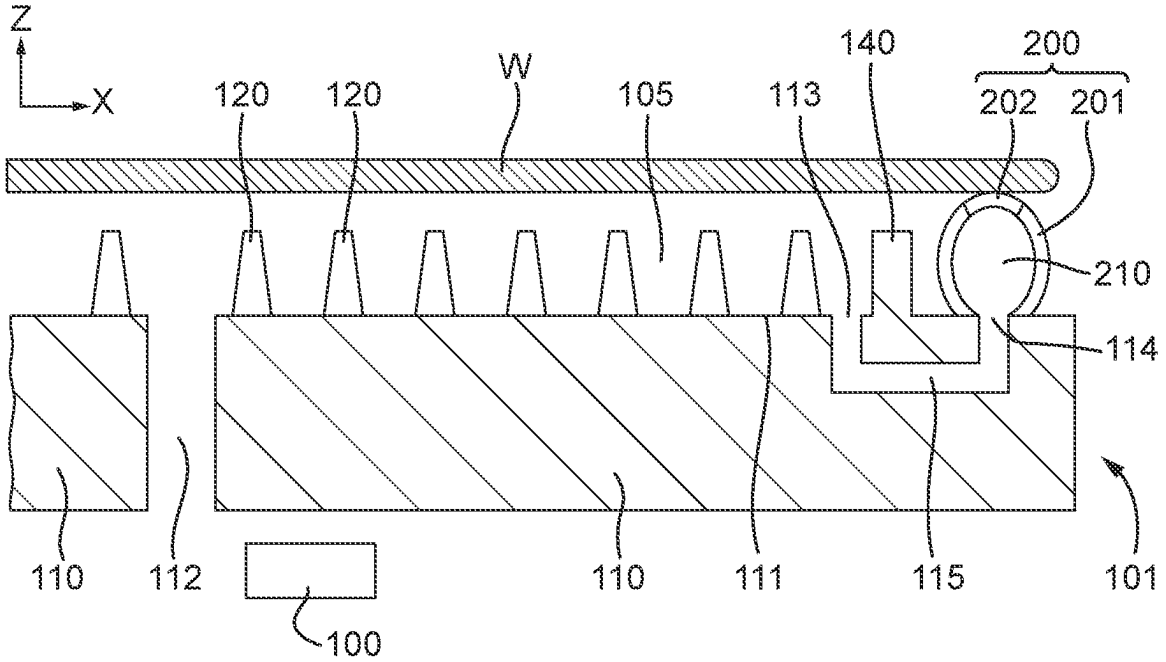
Z
X
120
120
W
105
113
140
200
202
201
210
114
110
112
110
111
115
101
100

Fig. 11

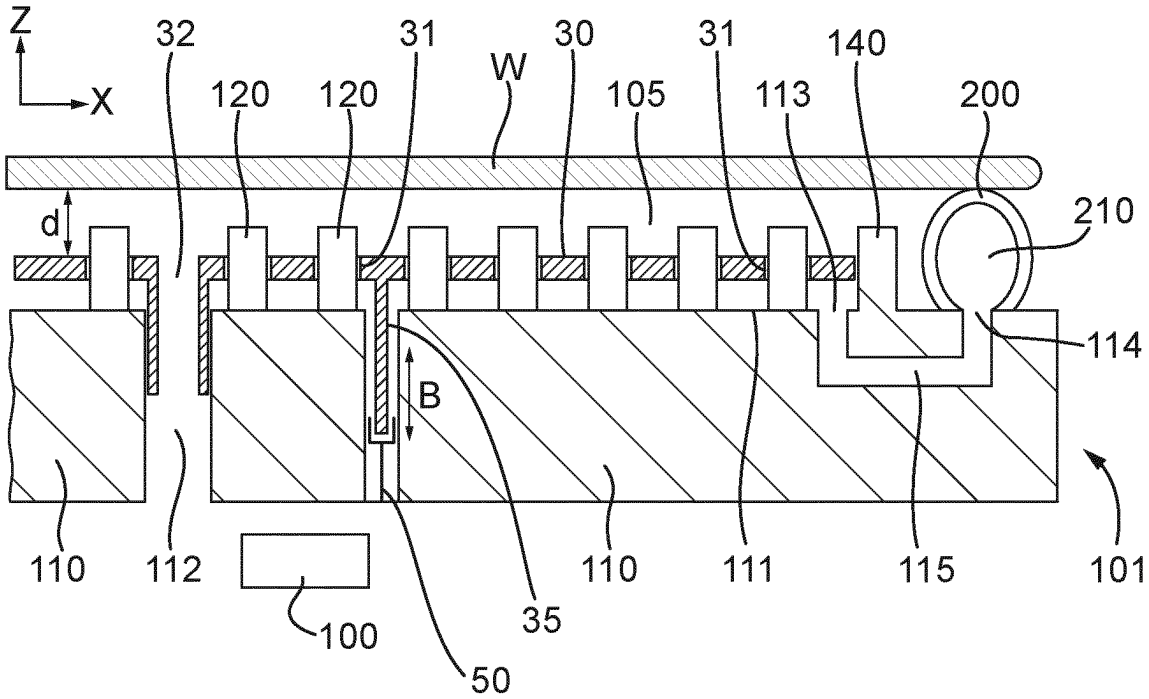
Z
X
32
120
120
31
W
30
105
31
113
140
200
210
d
114
B
110
112
100
50
35
110
111
115
101

SUBSTRATE HOLDER, LITHOGRAPHIC APPARATUS AND METHOD

CROSS-REFERENCE TO RELATED APPLICATIONS

This application is the U.S. national phase entry of PCT Patent Application No. PCT/EP2020/069109, which was filed on Jul. 7, 2020, which claims the benefit of priority of European Patent Application number 19192576.7, which was filed on Aug. 20, 2019 and of European Patent Application number 19219048.6, which was filed on Dec. 20, 2019 and which are incorporated herein in their entireties by reference.

FIELD

The present invention relates to a substrate holder for supporting a substrate, a lithographic apparatus comprising the substrate holder, a method of supporting a substrate on the substrate holder, and a method of clamping a substrate on the substrate holder.

BACKGROUND

A lithographic apparatus is a machine constructed to apply a desired pattern onto a substrate. A lithographic apparatus can be used, for example, in the manufacture of integrated circuits (ICs). A lithographic apparatus may, for example, project a pattern (also often referred to as "design layout" or "design") of a patterning device (e.g., a mask) onto a layer of radiation-sensitive material (resist) provided on a substrate (e.g., a wafer).

As semiconductor manufacturing processes continue to advance, the dimensions of circuit elements have continually been reduced while the amount of functional elements, such as transistors, per device has been steadily increasing over decades, following a trend commonly referred to as "Moore's law". To keep up with Moore's law the semiconductor industry is chasing technologies that enable to create increasingly smaller features. To project a pattern on a substrate a lithographic apparatus may use electromagnetic radiation. The wavelength of this radiation determines the minimum size of features which are patterned on the substrate. Typical wavelengths currently in use are 365 nm (i-line), 248 nm, 193 nm and 13.5 nm.

A lithographic apparatus may include an illumination system for providing a projection beam of radiation, and a support structure for supporting a patterning device. The patterning device may serve to impart the projection beam with a pattern in its cross-section. The apparatus may also include a projection system for projecting the patterned beam onto a target portion of a substrate.

In a lithographic apparatus the substrate to be exposed (which may be referred to as a production substrate) may be held on a substrate holder (sometimes referred to as a wafer table). The substrate holder may be moveable with respect to the projection system. The substrate holder usually comprises a solid body made of a rigid material and having similar dimensions in plan to the production substrate to be supported. The substrate-facing surface of the solid body may be provided with a plurality of projections (referred to as burls). The distal surfaces of the burls may conform to a flat plane and support the substrate. The burls can provide several advantages: a contaminant particle on the substrate holder or on the substrate is likely to fall between burls and therefore does not cause a deformation of the substrate; it is easier to machine the burls so their ends conform to a plane than to make the surface of the solid body flat; and the properties of the burls can be adjusted, e.g. to control clamping of the substrate to the substrate holder.

Production substrates may become distorted during the process of manufacturing devices, especially when structures with significant height, e.g. so-called 3D-NAND, are formed. Often substrates may become "bowl-shaped", i.e. are concave viewed from above, or "umbrella-shaped", i.e. convex viewed from above. For the purpose of the present disclosure the surface on which device structures are formed is referred to as the top surface. In this context, "height" is measured in the direction perpendicular to the nominal surface of the substrate, which direction may be referred to as the Z-direction. Bowl-shaped and umbrella-shaped substrates are, to a certain degree, flattened out when clamped onto a substrate holder, e.g. by partially evacuating the space between the substrate and substrate holder. However, if the amount of distortion, which is typically measured by the height difference between the lowest point on the surface of the substrate and the highest point on the surface of the substrate, is too great, various problems can arise. In particular, it may be difficult to clamp the substrate adequately, there may be excessive wear of the burls during loading and unloading of substrates and the residual height variation in the surface of the substrate may be too great to enable correct patterning on all parts of the substrate, especially close to the edges.

SUMMARY

An object of the present invention is to provide a substrate holder that enables effective pattern formation on a substrate. A substrate holder according to an embodiment may advantageously provide an alternative way of supporting a substrate.

In a first embodiment, there is provided a substrate holder for supporting a substrate, the substrate holder comprising a main body having a surface; a plurality of supporting pins connected to the surface of the main body at proximal ends of the plurality of supporting pins, wherein distal ends of the plurality of supporting pins form a support surface for a substrate; and a plate comprising a plurality of openings, the plate being positioned between the surface of the main body and the support surface, wherein all of the plurality of supporting pins connected to the surface of the main body have a corresponding opening in the plate, and wherein the plate is actuatable in a direction along the plurality of supporting pins between the surface of the main body and the support surface.

According to the first embodiment, there is also provided a method of supporting a substrate on the substrate holder of any of the preceding claims, the method comprising: providing a substrate on the support surface of the substrate holder; obtaining data relating to one or more of a shape of the substrate on the support surface, a pressure between the substrate and the surface of the main body, and/or a flow rate of fluid extracted from between the substrate and the surface of the main body; determining a preferred position of the plate between the surface of the main body and the support surface based on the obtained data; moving the plate in the direction along the plurality of supporting pins to the preferred position; and extracting fluid from a space between the plate and the substrate.

According to a second embodiment, there is provided a substrate holder for supporting a substrate, the substrate holder comprising: a main body having a surface facing the

substrate when the substrate is supported on the substrate holder; a flexible member protruding from the surface of the main body and having a height, the flexible member defining an enclosed cavity therein and being configured to form a seal with an underside of the substrate in a first state; and a fixed member protruding from the surface of the main body and having a height; wherein in a second state, the substrate holder is configured to reduce a pressure in the enclosed cavity of the flexible member such that the substrate is supported on the substrate holder.

According to the second embodiment, there is also provided a method of clamping a substrate to a substrate holder, the method comprising: providing a substrate holder, the substrate holder comprising: a main body having a surface facing the substrate when the substrate is supported on the substrate holder; a flexible member protruding from the surface of the main body and having a height, the flexible member defining an enclosed cavity therein; and a fixed member protruding from the surface of the main body and having a height; providing a substrate on the substrate holder, wherein the flexible member contacts an underside of the substrate prior to clamping the substrate to the substrate holder; clamping the substrate to the substrate holder; and during clamping, reducing the pressure in the enclosed cavity of the flexible member such that the substrate is supported on the substrate holder.

According to the present invention, there is also provided a lithographic apparatus comprising the substrate holder.

Further embodiments, features and advantages of the present invention, as well as the structure and operation of the various embodiments features and advantages of the present invention, as well as the structure and operation of the various embodiments of the present invention, are described in detail below with reference to the accompanying drawings.

BRIEF DESCRIPTION OF THE DRAWINGS

Embodiments of the invention will now be described by way of example only, with reference to the accompanying schematic drawings in which corresponding reference symbols indicate corresponding parts, and in which:

FIG. **1** schematically depicts an overview of a lithographic apparatus;

FIG. **2** depicts a cross section of part of a substrate holder according to a first embodiment;

FIG. **3** depicts a plan view of the substrate holder of FIG. **2**;

FIG. **4** depicts a variation of the substrate holder of FIGS. **2** and **3**;

FIG. **5** depicts a variation of the substrate holder of FIGS. **2** and **3**;

FIG. **6** depicts a variation of the substrate holder of FIGS. **2** and **3**;

FIGS. **7**A and **7**B depict a variation of the substrate holder of FIGS. **2** and **3**;

FIGS. **8**A, **8**B, **8**C and **8**D depict a cross section of part of a substrate holder according to a second embodiment;

FIG. **9** depicts a variation of the substrate holder of FIGS. **8**A-**8**D;

FIG. **10** depicts a variation of the substrate holder of FIGS. **8**A-**8**D; and

FIG. **11** depicts a variation of the substrate holder according to the first and second embodiments.

The features shown in the figures are not necessarily to scale, and the size and/or arrangement depicted is not limiting. It will be understood that the figures include optional features which may not be essential to the invention. Furthermore, not all of the features of the substrate holder are depicted in each of the figures, and the figures may only show some of the components relevant for a describing a particular feature.

DETAILED DESCRIPTION

In the present document, the terms "radiation" and "beam" are used to encompass all types of electromagnetic radiation, including ultraviolet radiation (e.g. with a wavelength of 436, 405, 365, 248, 193, 157, 126 or 13.5 nm).

The term "reticle", "mask" or "patterning device" as employed in this text may be broadly interpreted as referring to a generic patterning device that can be used to endow an incoming radiation beam with a patterned cross-section, corresponding to a pattern that is to be created in a target portion of the substrate. The term "light valve" can also be used in this context. Besides the classic mask (transmissive or reflective, binary, phase-shifting, hybrid, etc.), examples of other such patterning devices include a programmable mirror array and a programmable LCD array.

FIG. **1** schematically depicts a lithographic apparatus LA. The lithographic apparatus includes an illumination system (also referred to as illuminator) IL configured to condition a radiation beam B (e.g., EUV radiation or DUV radiation), a mask support (e.g., a mask table) MT constructed to support a patterning device (e.g., a mask) MA and connected to a first positioner PM configured to accurately position the patterning device MA in accordance with certain parameters, a substrate support (e.g., a substrate table) WT constructed to hold a substrate (e.g., a resist coated wafer) W and connected to a second positioner PW configured to accurately position the substrate support WT in accordance with certain parameters, and a projection system (e.g., a refractive projection lens system) PS configured to project a pattern imparted to the radiation beam B by patterning device MA onto a target portion C (e.g., comprising one or more dies) of the substrate W.

In operation, the illumination system IL receives the radiation beam B from a radiation source SO, e.g. via a beam delivery system BD. The illumination system IL may include various types of optical components, such as refractive, reflective, magnetic, electromagnetic, electrostatic, and/or other types of optical components, or any combination thereof, for directing, shaping, and/or controlling radiation. The illuminator IL may be used to condition the radiation beam B to have a desired spatial and angular intensity distribution in its cross section at a plane of the patterning device MA.

The term "projection system" PS used herein should be broadly interpreted as encompassing various types of projection system, including refractive, reflective, catadioptric, anamorphic, magnetic, electromagnetic and/or electrostatic optical systems, or any combination thereof, as appropriate for the exposure radiation being used, and/or for other factors such as the use of an immersion liquid or the use of a vacuum. Any use of the term "projection lens" herein may be considered as synonymous with the more general term "projection system" PS.

The lithographic apparatus may be of a type wherein at least a portion of the substrate W may be covered by an immersion liquid having a relatively high refractive index, e.g., water, so as to fill an immersion space between the projection system PS and the substrate W— which is also referred to as immersion lithography. More information on

immersion techniques is given in U.S. Pat. No. 6,952,253, which is incorporated herein by reference.

The lithographic apparatus may be of a type having two or more substrate supports WT (also named "dual stage"). In such "multiple stage" machine, the substrate supports WT may be used in parallel, and/or steps in preparation of a subsequent exposure of the substrate W may be carried out on the substrate W located on one of the substrate support WT while another substrate W on the other substrate support WT is being used for exposing a pattern on the other substrate W.

In addition to the substrate support WT, the lithographic apparatus may comprise a measurement stage (not depicted in FIG. **1**). The measurement stage is arranged to hold a sensor and/or a cleaning device. The sensor may be arranged to measure a property of the projection system PS or a property of the radiation beam B. The measurement stage may hold multiple sensors. The cleaning device may be arranged to clean part of the lithographic apparatus, for example a part of the projection system PS or a part of a system that provides the immersion liquid. The measurement stage may move beneath the projection system PS when the substrate support WT is away from the projection system PS.

In operation, the radiation beam B is incident on the patterning device, e.g. mask, MA which is held on the mask support MT, and is patterned by the pattern (design layout) present on patterning device MA. Having traversed the mask MA, the radiation beam B passes through the projection system PS, which focuses the beam onto a target portion C of the substrate W. With the aid of the second positioner PW and a position measurement system PMS, the substrate support WT can be moved accurately, e.g., so as to position different target portions C in the path of the radiation beam B at a focused and aligned position. Similarly, the first positioner PM and possibly another position sensor (which is not explicitly depicted in FIG. **1**) may be used to accurately position the patterning device MA with respect to the path of the radiation beam B. Patterning device MA and substrate W may be aligned using mask alignment marks M**1**, M**2** and substrate alignment marks P**1**, P**2**. Although the substrate alignment marks P**1**, P**2** as illustrated occupy dedicated target portions, they may be located in spaces between target portions. Substrate alignment marks P**1**, P**2** are known as scribe-lane alignment marks when these are located between the target portions C.

In this specification, a Cartesian coordinate system is used. The Cartesian coordinate system has three axis, i.e., an x-axis, a y-axis and a z-axis. Each of the three axis is orthogonal to the other two axis. A rotation around the x-axis is referred to as an Rx-rotation. A rotation around the y-axis is referred to as an Ry-rotation. A rotation around about the z-axis is referred to as an Rz-rotation. The x-axis and the y-axis define a horizontal plane, whereas the z-axis is in a vertical direction. The Cartesian coordinate system is not limiting the invention and is used for clarification only. Instead, another coordinate system, such as a cylindrical coordinate system, may be used to clarify the invention. The orientation of the Cartesian coordinate system may be different, for example, such that the z-axis has a component along the horizontal plane.

In a lithographic apparatus it is necessary to position with great accuracy the upper surface of a substrate to be exposed in the plane of best focus of the aerial image of the pattern projected by the projection system. To achieve this, the substrate can be held on a substrate holder. The surface of the substrate holder that supports the substrate can be provided with a plurality of burls whose distal ends can be coplanar in a nominal support plane. The burls, though numerous, may be small in cross-sectional area parallel to the support plane so that the total cross-sectional area of their distal ends is a few percent, e.g. less than 5%, of the surface area of the substrate. The gas pressure in the space between the substrate holder and the substrate may be reduced relative to the pressure above the substrate to create a force clamping the substrate to the substrate holder.

It may be desirable to alter the control used to clamp a substrate to a surface of the substrate holder. This will be described in relation to a substrate holder which can be used to keep a substrate in a predetermined position, for example, during exposure of the substrate to radiation (i.e. when being patterned as described above).

As mentioned, it is desirable to increase the height of structures formed on a substrate. It has generally been found that distortion of a substrate positioned on a substrate holder tends to increase as the height of these structures increases, making reliable clamping of the substrate on the substrate holder more difficult.

The clamping can be made more reliable even taking the increased height into account. A first option is to increase the flow rate of fluid extracted beneath the substrate when the substrate is positioned on the substrate holder. A second option is the reduce the gap between the substrate and the substrate holder when in position on the substrate holder, i.e. by making the burls shorter. Both these options may improve the clamping when the substrate is in position on the substrate holder. However, both these options may have detrimental effects.

When a substrate is loaded onto a substrate holder, the substrate generally does not land perfectly flat on the substrate holder. This means that during loading of a substrate, one point of the substrate tends to make contact with at least one of the burls and then the rest of the substrate comes into contact with the substrate holder. Frictional forces between the substrate and the substrate holder during loading may lead to in-plane deformation in the substrate as the substrate makes contact across the substrate holder. The in-plane deformation can increase overlay errors. Both options described above for improving clamping may lead to increased in-plane deformation in the substrate, leading to greater overlay error.

Thus, although these options may improve clamping of the substrate, they can also lead to increased overlay errors which reduces throughput. The flow can be reduced for clamping the substrate to ameliorate the negative impact, but this increases the amount of time taken to clamp the substrate and thus, also decreases throughput. Additionally, the flow rate may affect substrates differently depending on how flat the substrate is during loading. Using a flow rate controller with different flow rate settings for different types of in-plane deformation could assist in dealing with different substrates but may be expensive.

To address at least some of the disadvantages of the prior art, a first embodiment provides a substrate holder for supporting a substrate. The substrate holder is configured to support the substrate. The substrate holder may hold the substrate in place. The substrate holder may be positioned on, or may be part of the substrate support WT described above, i.e., the substrate holder and the substrate support WT are made of a single piece. Further to this, the substrate holder may be configured to keep the substrate in place on the substrate holder in a particular position. For example, the substrate may be loaded onto the substrate during loading. The substrate holder may then be configured to keep the

substrate in a fixed position relative to the substrate holder. This may otherwise be known as clamping the substrate.

A partial cross section of a substrate holder **1** according to a first embodiment is shown in FIG. **2**. The substrate holder **1** comprises a main body **10** having a surface **11**. The main body **10** may form a substantial portion of the substrate holder **1**. The surface **11** may be a top surface of the main body **10** when positioned as shown in FIG. **2**. Thus, the top surface may be an upper surface in the Z-direction as shown.

The substrate holder **1** comprises a plurality of supporting pins **20** connected to the surface **11** of the main body **10**. The supporting pins **20** may otherwise be referred to as burls, as described above. The plurality of supporting pins **20** have proximal ends **21**, which are situated near the main body **10** when in position, and distal ends **22**. The distal ends **22** are at opposite ends of the plurality of supporting pins **20** to the proximal ends **21**, i.e. are situated at an end of the supporting pin **20** away from the main body **10**.

The plurality of supporting pins **20** have a central longitudinal axis **23**, with the proximal end **21** at one end of the supporting pin **20** and the distal end **22** at the other end of the supporting pin **20** along the central longitudinal axis **23**. Thus, each of the plurality of supporting pins **20** may have a central longitudinal axis **23** from the proximal end **21** to the distal end **22**.

The distal ends **22** of the plurality of supporting pins **20** form a support surface for a substrate W. The distal ends **22** of the plurality of supporting pins **20** may be provided in a plane. Preferably, the support surface is formed in a substantially flat plane, i.e. the distal surfaces of the supporting pins **20** may conform to a flat plane and support the substrate W. This is beneficial as the substrate W can be positioned on the support surface to also be substantially flat, which can reduce errors when patterning the substrate W.

The substrate holder **1** further comprises a plate **30**. The plate **30** is positioned between the surface **11** of the main body **10** and the support surface, i.e. formed by the distal ends **22** of the plurality of supporting pins **20**. The plate **30** in position is shown in FIG. **2** and in plan view in FIG. **3**. The plate **30** comprises a plurality of openings **31**. The plurality of supporting pins **20** can be positioned within the plurality of openings **31**. All of the plurality of supporting pins **20** connected to the surface **11** of the main body **10** have a corresponding opening **31** in the plate **30**. In other words, each of the plurality of supporting pins **20** has a corresponding opening **31**. Thus, there is an opening **31** in the plate **30** for each supporting pin **20**. In this way, the plate **30** can fit around each of the supporting pins **20**. Each of the plurality of openings **31** may be formed as a through hole in the plate **30**. Thus, each of the plurality of openings **31** may be a circular hole through which a supporting pin **20** may enter. The plate **30** may extend across the whole of the substrate W. The plate **30** may be approximately the same size as the substrate W in plan. The plate **30** may be slightly smaller than the substrate W in plan. The plate **30** can be used to provide a surface beneath most of the substrate W to control the environment below the substrate W.

The plate **30** may be disc shaped. The plate **30** may be substantially circular. The plate **30** may have a thickness of a few millimetres. For example, the plate **30** may be approximately 1-2 mm. The plate **30** may be the same material as the substrate holder **1**. For example, the plate **30** may be glass, ceramic, Zerodur, SiC or SiSiC, etc. The plate **30** may be metal. The plurality of openings **31** may be formed by a laser, which may be beneficial in providing accurately shaped openings.

The plate **30** may be moved in a direction which is transverse to the surface **11** of the substrate holder **1** and/or the support surface, i.e. the plate **30** may not be moved parallel to the surface **11** or the support surface. More specifically, the plate **30** is actuatable in a direction along the plurality of supporting pins **20** between the surface **11** of the main body **10** and the support surface. The plate **30** may be actuatable to a preferred position along this direction. The plate **30** can be moved from the surface **11** of the main body **10** towards the support surface, at the distal ends **22** of the plurality of supporting pins **20**, or in the opposite direction from the support surface towards the surface **11** of the main body **10**. The plate **30** being actuatable in a direction along the plurality of supporting pins **20** may mean that the plate **30** is actuated along the direction of the central longitudinal axis **23** of the supporting pins **20**. The direction of movement of the plate **30** may be substantially perpendicular to the surface **11** of the main body **10** and/or the support surface. The plate **30** may be actuated to move up and down in the direction of arrow B shown in FIG. **2**, which may be in the Z-direction.

As the plate **30** is actuated in a direction along the plurality of supporting pins **20** between the surface **11** of the main body **10** and the support surface, the distance d between the support surface (formed by the distal ends **22** of the plurality of supporting pins **20**) and the plate **30** can be changed.

As described above, during loading of the substrate W on the substrate holder **1**, reducing the gap between the substrate W and the substrate holder **1** and/or increasing the flow rate used to clamp substrate W to substrate holder **1** may have a detrimental effect on in-plane deformation of the substrate W. However, a larger gap and/or slower flow rate can reduce the effectiveness of and/or increase the time taken for clamping the substrate W once on the substrate holder **1**. Thus, a balance is needed between the impact of in-plane deformation, clamping efficiency and throughput.

Actuating the plate **30** as described above allows the distance d between the plate **30** and the support surface to be controlled and varied. As the substrate W is positioned on the support surface when in use, this means that the distance between the plate **30** and the substrate W can be controlled. This can be advantageous in that the plate **30** can be positioned in a first position for improving or optimising loading of the substrate W onto the substrate holder **1**, and the plate **30** can be positioned in a second position for improving or optimising the clamping of the substrate W. For example, the plate **30** can be moved in a direction along the plurality of supporting pins **20** towards the supporting surface after loading the substrate W. This reduces the distance d between the plate **30** and the support surface. This means that clamping may be much more effective and substrates W can be adequately clamped even with very high deformation, and even when using a relatively low extraction flow rate.

The distance d may be the distance between the support surface and a top surface **33** of the plate **30**. The top surface **33** of the plate **30** is the surface which faces the substrate W, and is opposite the lower surface **34** of the plate **30**, wherein the lower surface **34** of the plate **30** faces the surface **11** of the main body **10**. The top surface **33** of the plate **30** is shown as the upper surface in FIG. **2**, although it will be understood that the substrate holder **1** may be used in other orientations.

Each of the plurality of openings **31** may be sized to fit only a single supporting pin **20**. Ideally, each of the plurality of openings **31** are of a similar size to each of the plurality

of supporting pins **20**, such that each of the openings **31** is substantially flush with the outside of each of the plurality of supporting pins **20**. Thus, in FIG. **3**, the plurality of openings **31** are formed around each of the plurality of openings **20**, but no gap can be seen around each supporting pin **20** in this figure. The reason that this is beneficial is that the environment above the plate **30** can be more accurately controlled because less fluid leaks from above the plate **30** to below the plate **30**.

Ideally, the number of openings **31** in the plate **30** corresponds to the number of supporting pins **20**. Although, as will be described below, the plate **30** may additionally comprise at least one extractor portion **32** which includes an opening, and which correspond to other features on the main body **10**. However, the extractor portion **32** may be formed in a different way from the plurality of openings **31**. For example, the extractor portion **32** may comprise a protrusion with a passage therethrough. Having the same number of openings **31** means that there should be less fluid leaks from above the plate **30** to below the plate **30**.

As shown in FIGS. **2** and **3**, the plurality of supporting pins **20** may be substantially cylindrical. Generally, it is preferable that a cross-sectional shape of the supporting pins **20** is uniform along the length of the longitudinal axis **23**, for example as with the cylindrical supporting pins **20** in FIGS. **2** and **3**. This is beneficial because any gap between the plurality of openings **31** and the plurality of supporting pins **20** is substantially constant. This means that gap between the plurality of openings **31** and the plurality of supporting pins **20** can preferably be kept to a minimum to reduce fluid leaking across the plate **30** (i.e. from above the plate **30** to below the plate **30**). Preferably the plurality of supporting pins **20** have the same shape as each other.

It will be noted that it is not necessary for the supporting pins to be substantially cylindrical, and other shapes for the supporting pins **20** may be used. It is also not necessary for the cross-sectional shape of the supporting pins to be uniform along the length of the supporting pins. For example, each of the plurality of supporting pins **20** may be frustoconical, i.e. a truncated cone, or may be conical in shape. This is shown in FIG. **4** for example. There may be advantages to using such shapes for the plurality of supporting pins **20**. For example, a frustoconical supporting pin **20** may be stronger and thus, have less likelihood of breaking. In FIG. **4**, the plurality of openings **31** are shown as having sides which are substantially perpendicular to surfaces of the plate **30**. However, the sides of the openings **31** may be slanted to more closely match the shape of the plurality of supporting pins **20**. This may be beneficial in reducing the gap between the plurality of supporting pins **20** and the plurality of openings **31** to reduce fluid leaking across the plate **30**. Although the supporting pins **20** of FIGS. **5**, **6**, **7**A and **7**B are shown as substantially cylindrical, the supporting pins **30** may be any shape, and could be frustoconical as shown in FIG. **4** for example, in combination with any of the features described in relation to FIGS. **5**, **6**, **7**A and/or **7**B.

The plurality of supporting pins **20** may be connected to the surface **11** of the main body **10** in any suitable way. The plurality of supporting pins **20** may be separate components which are attached to the surface **11** of the main body **10**. Alternatively, the plurality of supporting pins **20** may be integral to the main body **10**. In other words, the plurality of supporting pins **20** may be formed as protrusions from the surface **11** of the main body **10**, i.e. the plurality of supporting pins **20** may be formed as a single part with the main body **10**.

The substrate holder **1** may be configured to extract fluid from between the substrate W supported on the support surface and the plate **30**. Fluid at the edge of the substrate W may be drawn under the substrate and may be moved in the direction of arrow A as shown in FIG. **2**. As fluid is extracted the pressure beneath the substrate W is reduced relative to pressure above the substrate W, and the edge of the substrate W will lower towards the substrate holder **1**. The substrate W can be clamped by extracting fluid in the space below the substrate W to provide a reduced relative pressure in the space between the substrate holder **1** and the substrate W. Providing the plate **30** means that the pressure only needs to be reduced between the plate **30** and the substrate W which is generally a smaller space than between the substrate W and main body **10**. The space can be reduced by reducing distance d. Controlling pressure above the plate **30** may be more effectively done if fluid leakage from above the plate **30** to below the plate **30** is reduced or minimised (as mentioned above). Thus, providing the plate **30** (which is positioned closer to the substrate W than the surface **11** of the main body **10**) and extracting fluid from the gap between the substrate W and the plate **30** may advantageously provide more effective clamping.

The main body **10** may comprise at least one extraction opening **12** through which the fluid is extracted. The plate **30** may comprise at least one at least one extractor portion **32** through which the fluid is extracted. There may be the same number of extractor portions **32** in the plate **30** as extraction openings **12** in the main body **10**. There may be plural extractor portions **32** and extraction openings **12**. For example only, there may be three extractor portions **32** as shown in FIG. **3** (although there could be more or less).

The extractor portion **32** may correspond to the extraction opening **12** in the main body **10** of the substrate holder **1**. The extractor portion **32** may be aligned with the extraction opening **12**. The extractor portion **32** may interact with the at least one extraction opening **12**.

The extractor portion **32** may be shaped to sit within the extraction opening **12**. The extractor portion **32** may be formed to be flush inside the extraction opening **12**. For example, the extraction opening **12** may comprise a hole within the main body **10** and the extractor portion **32** may be formed with a protrusion with a passage therethrough which sits within, and is flush with, the extraction opening **12**. For example, the extractor portion **32** may be formed by a hollow cylindrical protrusion which fits within the extraction opening **12** or portion shaped as a cylindrical hole, as shown in FIG. **2**. However, this is not necessary and the passage and openings for extraction may be any shape in cross-section, e.g. rectangular, triangular or square. The extraction opening **12** may comprise a protrusion which sits within a through hole forming an extractor portion **32** of the plate **30**. In this case, the height of the protrusion forming the extraction opening **12** should be carefully selected, for example, to protrude to a similar height as the support surface, but allowing for a small gap so that a top of the protrusion of the extractor portion **12** does not contact the underside of the substrate W. Various configurations, including those described here can thus be used to extract fluid from above the plate **30** via the extractor portion **32** in the plate **30** and the extraction opening **12** in the main body **10**.

It is beneficial to reduce a space between the plate **30** and the main body **10** because an environment above the plate **30** can then be more accurately controlled using the fluid extraction. Thus, as indicated above, it is beneficial to provide only a small gap between the plurality of supporting pins **20** and the plurality of openings **31** as this reduces

leakage of flow from above the plate **30** to below the plate **30**. Similarly, it is beneficial to provide the extraction opening **32** as being flush within the extractor **12**. Similarly, it is beneficial to provide the plate **30** across the whole surface **11** of the main body **10**. The plate **30** may be formed to fit snugly within a physical boundary positioned radially outwards of the plate **30**. The physical boundary could be formed towards an edge of the main body **10** as shown in FIGS. **2** and **3**. The physical boundary could be formed by a fixed sealing member **40**. The fixed sealing member **40** may be a wall type protrusion formed around the edge of the main body **10**, for example, around the circumference of the main body **10**. The fixed sealing member **40** may be formed to provide a seal between the lower side of the substrate W and the substrate holder **1** around the edge of the substrate W. Ideally, gaps formed between the plate **30** and any other part of the substrate holder **1** are kept to a minimum to prevent fluid leaking into the space below the plate **30**, but are not so small that movement of the plate **30** is restricted.

Preferably, the plate **30** is substantially flat. This means that the plate **30** can be more easily moved along the plurality of supporting pins **20** and if desirable, can be positioned on the surface **11** of the main body **10**. This also means that the plate **30** can be very close to the support surface across the whole of the plate **30**. Additionally or alternatively, the plate **30** is substantially parallel to the support surface. This also means that the plate **30** can be very close to the support surface across the whole of the plate **30**.

A controller **100** may be provided and used to determine the preferred position of the plate **30**. The controller **100** may be separate from the main body **10**, for example as shown in FIGS. **1** and **2**. However, it will be understood that the controller **100** may be formed as part of, within, or mechanically or electrically coupled to the main body **10**. The controller **100** may determine a preferred position of the plate **30** depending on relevant data. The controller **100** could otherwise be referred to as a control unit. The controller **100** may comprise a processor and may be configured to receive relevant data and use said data to control at least one actuator **50** to move the plate **30** to a determined position, i.e. the preferred position.

The preferred position may be determined depending on data relating to a shape of the substrate W on the support surface. The shape of the substrate W may be estimated. The estimated shape of the substrate W may be predicted based on previous measurements taken. For example, measurements may be taken of previously patterned substrates when a particular process or layer is formed. The prediction may be based on the previous measurements, for example, by generating an average shape dependent on these measurement. The shape of the substrate W could be measured using at least one sensor (not depicted in the drawings). Any appropriate sensor and/or system for measuring the shape of the substrate W can be used, such as equipment by MTI Instruments, Inc. for measuring bow and/or warp of a substrate W, e.g. as described on https://www.mtiinstruments.com/applications/wafer-bow-and-warp/. Data relating to the measured shape of the substrate W from the sensor could be provided as feedback to the controller **100** such that the plate **30** is actuated in response to the measured shape. Thus, the position of the plate **30** could be dynamically controlled.

Additionally or alternatively, the preferred position may be determined depending on data relating to a pressure between the substrate W and the surface **11** of the main body **10**. More specifically, the data may relate to a pressure in the space between the substrate W and the plate **30**. A pressure sensor (not depicted in the drawings) may be used to measure the pressure between the substrate W and the surface **11** of the main body **10**, or more specifically, between the substrate W and the plate **30**. Various sensors for measuring the pressure in the space below the substrate W are known. For example, a pressure sensor as disclosed in WO 2017/137129 A1, which is hereby incorporated by reference in its entirety, provides an example of a pressure sensor which might be used. Data relating to the pressure measured by the sensor could be provided as feedback to the controller **100** such that the plate **30** is actuated in response to the measured pressure. Thus, the position of the plate **30** could be dynamically controlled.

Additionally or alternatively, the preferred position may be determined depending on data relating to a flow rate of fluid extracted from between the substrate W and the surface **11** of the main body **10**, or more specifically, from between the substrate W and the plate **30**. A flow rate sensor (not depicted in the drawings) may be used to measure the flow rate of the fluid extracted via the extractor portion **32** and/or the extraction opening **12**. Various sensors for measuring the flow rate in the space below the substrate W are known. Data relating to the flow rate measured by the sensor could be provided as feedback to the controller **100** such that the plate **30** is actuated in response to the measured flow rate. Thus, the position of the plate **30** could be dynamically controlled.

The substrate holder **1** may comprise at least one actuator **50** configured to actuate the plate **30**. The substrate holder **1** may comprise a plurality of actuators **50** configured to actuate the plate. The plurality of actuators **50** can be provided at locations across the plate **30** to accurately and effectively control the position of the plate **30**. Preferably, the substrate holder **1** comprises at least three actuators **50** configured to actuate the plate **30**. Providing at least three actuators **50** is beneficial because they can be positioned to reliably support the plate **30**. For example, at least three actuators **50** may be provided in a substantially triangular shape in plan view.

The plate **30** may comprises a protrusion **35** which interacts with at least one actuator **50** as shown in FIGS. **2**, **4**, **5**, **6**, **7**A and **7**B. For example, the protrusion **35** may slot into a part of at least one actuator **50** such that the actuator **50** can move the protrusion **35** to change the position of the plate **30**. However, this is not necessary, i.e. the plate **30** may not comprise any such protrusion **35**. Instead, for example, the at least one actuator **50** may protrude from the surface **11** of the main body **10** and may push the plate **30** in the direction along the plurality of supporting pins **20**.

The at least one actuator **50** may be formed from any known actuator which applies the required force to move the plate **30** in the appropriate direction, e.g. up and down in FIG. **2**. Any appropriate mechanism or machine may be used. For example only, the at least one actuator **50** may be an electromagnetic linear actuator (as used in E-pin module, a piezo actuator, motorized spindle, pneumatic actuator). The at least one actuator **50** may be configured to provide movement in one direction, corresponding to the direction of movement of the plate **30** along the plurality of supporting pins **20**. The at least one actuator **50** may be controlled by the controller **100**. The at least one actuator **50** may be small enough to fit substantially within the main body **10** of the substrate holder **1**. Although the figures show the actuator **50** positioned in the main body **10**, this is not necessary. The actuator **50** could be positioned below the main body **10** and may be positioned to contact and move the plate **30** from

below the main body **10**. Thus, the actuator **50** may be at least partially, or entirely outside of the main body **10**.

The substrate holder **1** may further comprise a movable member **60** as shown in any of FIGS. **5**, **6**, **7**A and **7**B. The substrate holder **1** as described in relation to any of FIGS. **5**, **6**, **7**A and **7**B may include any or all of the features described in relation to FIGS. **1**-**4**, unless specified otherwise below.

The movable member **60** may surround the plurality of supporting pins **20**. The movable member **60** may protrude from the surface **11** of the main body **10**. The substrate holder **1** may be configured to move the movable member **60** up and down. The substrate holder **1** may be configured to move the movable member **60** in the same direction as the plate **30**, i.e. in the direction along the plurality of supporting pins **20**. The direction of movement of the movable member **60** is shown in FIGS. **5**, **6**, **7**A and **7**B by the arrow c.

The movable member **60** may be beneficial in controlling the gap at the edge of the substrate W between the substrate W and the substrate holder **1**. This can reduce a pressure drop used to clamp the substrate W. This can reduce in-plane deformation in the substrate W as a relatively low fluid extractor rate can be used to provide adequate clamping.

The movable member **60** may be positioned radially outwards of, an edge of the plate **30**. As shown in FIG. **5**, the movable member **60** may be provided in addition to the fixed sealing member **40**. The movable member **60** may be adjacent to, and radially outwards of, the fixed sealing member **40**.

The fixed sealing member **40** may surround the plurality of supporting pins **20**. The fixed sealing member **40** may protrude from the surface **11** of the main body **10**. The fixed sealing member **40** may be connected to the main body **10** in any way. The fixed sealing member **40** may be integral with the main body **10**. The fixed sealing member **40** may be positioned adjacent to, and radially outwards of, an edge of the plate **30**. The fixed sealing member **40** may be adjacent to, and radially inwards of, the movable member **60**. This is shown in FIG. **5**.

The movable member **60** may be used to form a seal with the base of the substrate W in the same way as the fixed sealing member **40**. However, the movable member **60** can be moved whereas the fixed sealing member **40** is not configured to move relative to the main body **10**. The substrate holder **1** may comprise at least one member actuator **70** configured to move the movable member **60**. The substrate holder **1** may comprise a plurality of member actuators **70**.

The substrate holder **1** may be configured to move the movable member **60** to a preferred position depending on data relating to one or more of a shape of the substrate W on the support surface, a pressure between the substrate W and the surface **11** of the main body **10** and/or a flow rate of fluid extracted from between the substrate W and the surface **11** of the main body **10**, or more particularly, from between the substrate W and the plate **30**.

A controller **100** may be provided and used to determine the preferred position of the movable member **60**. The controller **100** may be separate from the main body **10**, as shown in FIGS. **5**, **6**, **7**A and **7**B. However, it will be understood that the controller **100** may alternatively be formed as part of, within, or mechanically or electrically coupled to the main body **10**. Specifically, the controller **100** may determine a preferred position of the movable member **60** depending on relevant data. The controller **100** could otherwise be referred to as a control unit. The controller **100** may comprise a processor and may be configured to receive relevant data and use said data to control at least one member actuator **70** to move the movable member **60** to a determined position.

The same controller **100** may be used to determine the preferred position of the movable member **60** and the plate **30**, as shown in FIG. **5**. Alternatively, a different controller could be used instead, i.e. with one controller being used to determine and control the position of the plate **30**, and another controller being used to determine and control the position of the movable member **60**. Either way, the controller **100** may determine a preferred position of the movable member **60** depending on relevant data.

As indicated above, the preferred position may be determined depending on data relating to a shape of the substrate W on the support surface. The shape of the substrate W may be estimated. The estimated shape of the substrate W may be predicted based on previous measurements taken. For example, measurements may be taken of previously patterned substrate when a particular process or layer is formed. The prediction may be based on the previous measurements, for example, by generating an average shape dependent on these measurement. The shape of the substrate W could be measured using at least one sensor (not depicted in drawings). Any appropriate sensor and/or system for measuring the shape of the substrate W can be used, such as equipment by MTI Instruments, Inc. for measuring bow and/or warp of a substrate W, e.g. as described on https://www.mtiinstruments.com/applications/wafer-bow-and-warp/. Data relating to the measured shape of the substrate W from the sensor could be provided as feedback to the controller **100** such that the movable member **60** is actuated in response to the measured shape. Thus, the position of the movable member **60** could be dynamically controlled.

Additionally or alternatively, as indicated above, the preferred position may be determined depending on data relating to a pressure between the substrate W and the surface **11** of the main body **10**. More specifically, the data may relate to a pressure in the space between the substrate W and the plate **30**. A pressure sensor (not depicted in the drawings) may be used to measure the pressure between the substrate W and the surface **11** of the main body **10**, or more specifically, between the substrate W and the plate **30**. Various sensors for measuring the pressure in the space below the substrate W are known. For example, a pressure sensor as disclosed in WO 2017/137129 A1, which is hereby incorporated by reference in its entirety, provides an example of an appropriate pressure sensor which might be used. Data relating to the pressure measured by the sensor could be provided as feedback to the controller **100** such that the movable member **60** is actuated in response to the measured pressure. Thus, the position of the movable member **60** could be dynamically controlled.

Additionally or alternatively, the preferred position may be determined depending on data relating to a flow rate of fluid extracted from between the substrate W and the surface **11** of the main body **10**, or more specifically, from between the substrate W and the plate **30**. A flow rate sensor (not depicted in drawings) may be used to measure the flow rate of the fluid extracted via the extractor portion **32** and/or the extraction opening **12**. Various sensors for measuring the flow rate in the space below the substrate W are known. Data relating to the flow rate measured by the sensor could be provided as feedback to the controller **100** such that the movable member **60** is actuated in response to the measured flow rate. Thus, the position of the movable member **60** could be dynamically controlled.

The at least one member actuator **70** may be formed from any known actuator which applies the required force to move the moveable member **60** in the appropriate direction, e.g. up and down in FIG. **5** or **6**. Any appropriate mechanism or machine may be used. For example only, the at least one member actuator **70** may be an electromagnetic linear actuator (as used in E-pin module, a piezo actuator, motorized spindle, pneumatic actuator). The at least one member actuator **70** may be configured to provide movement in one direction, corresponding to the direction of movement of the movable member **60** along the plurality of supporting pins **20**. The at least one member actuator **70** may be controlled by the controller as described above. The at least one member actuator **70** may be small enough to fit substantially within the main body **10** of the substrate holder **1**. Although the figures show the member actuator **70** positioned in the main body **10**, this is not necessary. The member actuator **70** could be positioned below the main body **10** and may be positioned to contact and move the plate **30** from below the main body **10**. Thus, the member actuator **70** may be at least partially, or entirely outside of the main body **10**.

As shown in FIG. **5**, the substrate holder **1** may comprise the movable member **60** and the fixed sealing member **40**, with the movable member **60** being radially outwards of the fixed sealing member **40**. However, the position of these features could be swapped. Thus, the fixed sealing member **40** could be radially outwards of the movable member **60**, such that the movable member **60** is positioned adjacent to, and radially outwards of, an edge of the plate **30**, and adjacent to, and radially inwards of, the fixed sealing member **40**.

It may be preferable to provide the movable member **60** in combination with the fixed sealing member **40** to provide a better seal around the edge of the substrate W. However, it is not necessary to provide both the moving member **60** and fixed sealing member **40**. For example, only the fixed sealing member **40** may be provided as shown in FIGS. **1** and **2**. Although this may not provide as effective a seal as the movable member **60**, this may provide a lower cost solution which does not require additional actuation and control for the movable member **60**. Alternatively, only the movable member **60** may be provided without the fixed sealing member **40** as shown in FIG. **6**. The other features of the substrate holder **1** may be as described in relation to FIG. **5** above.

FIGS. **7**A and **7**B show an example of a movable member **80** being provided. The movable member **80** may be the same as the movable member **60** described in relation to either of FIG. **5** or **6** above. It will be noted that the substrate holder **1** of FIGS. **7**A and **7**B is provided without a fixed sealing member **40**, however, the substrate holder **1** could additionally comprise the fixed sealing member **40** as described in relation to FIGS. **1**, **2**, and/or **5**.

The movable member **80** differs from the movable member **60** described and shown in FIGS. **5** and **6** because no member actuator **70** is used to control the position of the movable member **80**. In this instance, a pressure gradient across the movable member **80** may provide a force to move the movable member **80**. A flexible seal **90** may be provided which forms a seal between the movable member **80** and the main body **10** of the substrate holder **1**. The flexible seal **90** may prevent fluid from outside the space between the substrate W and the substrate holder **1** from getting past the moveable member **80**. The flexible seal **90** may keep the movable member **80** substantially in place, whilst allowing the movable member **80** to move in the direction as described above (and shown by arrow c), whilst also preventing fluid from passing around the movable member **80**. As shown in FIG. **7**A, the fluid flow inwards depicted by arrow A may occur at the start of clamping of the substrate W. During clamping, the pressure below the movable member **80** may change due to the fluid extraction to lead to a pressure gradient in the gap above the movable member **80** resulting in the movable member **80** moving downwards, as shown in FIG. **7**B. The moveable member **80** may optionally include a flexible connection between the base of the movable member **80** and the main body **10**. For example, a spring **81** as shown in FIGS. **7**A and **7**B. The flexible connection being for keeping the movable member in position whilst allowing the movable member **80** to move in the direction as described above (and shown by arrow c)

In the first embodiment, a lithographic apparatus may be provided which comprises a substrate holder as in any of the variations described above. The lithographic apparatus may have any of the features described above and/or shown in relation to FIG. **1**.

The first embodiment may further provide a method of supporting a substrate W using a substrate holder **1** as in any of the variations described above. The method comprises providing a substrate W on the support surface of the substrate holder **1**. The method further comprises obtaining data relating to one or more of a shape of the substrate W on the support surface, a pressure between the substrate W and the surface **11** of the main body **10**, and/or a flow rate of fluid extracted from between the substrate W and the surface **11** of the main body **10**, and determining a preferred position of the plate **30** between the surface **11** of the main body **10** and the support surface based on the obtained data. This may be done using any of the sensors or controllers described above. Furthermore, the method includes moving the plate **30** in the direction along the plurality of supporting pins **20** to the preferred position and extracting fluid from a space between the plate **30** and the substrate W. Preferably, the steps of the method are carried out in the order described herein.

As described above, when a substrate W is loaded on a substrate holder, the substrate W generally does not land perfectly flat on the substrate holder. This can lead to in-plane deformation which can increase overlay error which may be exacerbated by known clamping techniques. Warped substrates may also lead to various other issues. For example, warpage of the substrate W may create local gaps which are prevented from closing due to stiffness of the substrate W. There are limitations on the suction pressure available which means that a substrate W which is warped in this way may not be effectively clamped.

Substrates which are warped have different shapes and may have specific issues relating to their shape. Clampability of a bowl shaped substrate may be limited by local pneumatic torque being too low to bend the substrate W to get it to roll off the supports. Clampability of a bowl shaped substrate may be limited by vacuum flow leakage to outside the substrate W. Clampability of an umbrella shaped substrate may be limited by large flow leakages at local gaps.

Prior used clamping techniques, especially on bowl-like wafers, generally involve a pressure gradient over a certain distance and over time. This means that local stresses in the substrate W vary over time during the clamping process. This might lead to local variation in virtual slip (hysteresis), depending on friction, and possibly a local inaccuracy in the substrate position. In these prior used clamping techniques, the speed at which the clamping is carried out affects the clamp behaviour and the possible inaccuracy in substrate position.

Clampability using known techniques may be limited in the extent of warpage which can be effectively clamped. For example, known techniques may only be able to clamp a substrate W with bowl shaped warpage of up to 500 μm. However, substrates may have a larger warpage, for example, such as those with 550 μm to 1 mm warpage.

Thus, techniques for clamping of warped substrates could be used to improve at least one of the above identified issues and/or to provide techniques which provide more effective clamping for substrates with higher degrees of warpage, i.e. over 500 μm. A second embodiment provides such techniques.

The second embodiment provides a substrate holder **101** for supporting a substrate W. The substrate holder **101** is configured to support the substrate W. The substrate holder **101** may hold the substrate W in place. The substrate holder **101** may be positioned on, or may be part of the substrate support WT described above, i.e. the substrate holder **101** and the substrate support WT may be made of a single piece. Further to this, the substrate holder **101** may be configured to keep the substrate W in place on the substrate holder **101** in a particular position. For example, the substrate W may be loaded onto the substrate W during loading. The substrate holder **101** may then be configured to keep the substrate W in a fixed position relative to the substrate holder **101**. This may otherwise be known as clamping the substrate W.

A partial cross section of a substrate holder **101** according to the second embodiment is shown in FIGS. **8**A-**8**D. Different configurations of the substrate holder **101** are shown in FIGS. **8**A-**8**D as will be described below.

The substrate holder **101** comprises a main body **110** having a surface **111**. The main body **110** may form a substantial portion of the substrate holder **101**. The surface **111** may be a top surface of the main body **110** when positioned as shown in FIGS. **8**A-**8**D. Thus, the top surface may be an upper surface in the Z-direction as shown. The surface **111** faces the substrate W when the substrate W is supported on the substrate holder **101**, i.e. the surface **111** and an underside of the substrate W are facing each other when the substrate W is positioned on the substrate holder **101**.

The substrate holder **101** comprises a flexible member **200**. The flexible member **200** may be positioned on the surface **111** of the main body **110**. The flexible member **200** may protrude from the surface **111** of the main body **110**. Specifically, the flexible member **200** may protrude upwards towards the substrate W when in place on the substrate holder **101**. In other words, the flexible member **200** may project from the surface **111** of the main body **110**. The flexible member **200** may be connected to the main body **110**, or more specifically to the surface **111** of the main body **110**. The flexible member **200** may be connected to the main body **110** in any appropriate way, for example, using an adhesive. One example for connecting the flexible member **200** is to enclose a bottom part of flexible member **200** in a groove, which would beneficially be relatively straightforward. Another example for connecting the flexible member **200** would be to clamp the flexible member **200** between two protrusions in the main body **110**. Another example for connecting the flexible member **200** would be fit the flexible member **200** over a formed part, for example, by fitting the flexible member **200** over hooks, or at least one mushroom-shaped protrusion, or extending the flexible member **200** with any shape that 'hooks' over/into the main body **110**. Another example for connecting the flexible member **200** would be to use a wire to sew the flexible membrane **200** onto the main body **110**.

The substrate holder **101** comprises a fixed member **140**. The fixed member **140** may be positioned on the surface **111** of the main body **110**. The fixed member **140** may protrude from the surface **111** of the main body **110**. Specifically, the fixed member **140** may protrude upwards towards the substrate W when in place on the substrate holder **101**. In other words, the fixed member **140** may project from the surface **111** of the main body **110**. The fixed member **140** may be connected to the main body **110**, or more specifically to the surface **111** of the main body **110**. The fixed member **140** may be connected to the main body **110** in any appropriate way, for example, using an adhesive. The fixed member **140** may be integral with the main body **110**. In other words, the fixed member **140** and the main body **110** may be formed of a single piece of material.

The flexible member **200** defines an enclosed cavity **210** therein. Thus, the enclosed cavity **210** is formed within the flexible member **200**. The enclosed cavity **210** is in a space defined at least partly by the flexible member **200**. The flexible member **200** at least partially surrounds the enclosed cavity **210**. Thus, the flexible member **200** forms an internal space, i.e. the enclosed cavity **210**, in which the pressure can be controlled as described below.

The flexible member **200** is formed of flexible material. Variations of the pressure within the enclosed cavity **210** affect the forces acting on the material forming the flexible member **200**. Thus, variations in pressure in the enclosed cavity **210** may be controlled to vary the shape of the flexible member **200**. For example, when the pressure is increased in the enclosed cavity **210**, the shape of the flexible member **200** may increase in size, and when the pressure is decreased in the enclosed cavity **210**, the shape of the flexible member **200** may decrease in size. The flexible member **200** is shown as being substantially circular in cross-section in FIGS. **8**A, **9** and **10**. It will be understood that the shape of the flexible member **200** is changed by variation in pressure in the enclosed cavity **210**. Also, the shape of the flexible member **200**, e.g. when there is ambient pressure in the enclosed cavity **210**, is not limiting, as long as the shape of the flexible member **200** can be varied as described below.

The flexible member **200** has a height. In this context, "height" is measured in the direction perpendicular to the surface **111**, which may be referred to as the Z-direction. Variations in the size of the flexible member **200** may alter the height of the flexible member **200**. For example, as the flexible member **200** increases in size, the height of the flexible member **200** may increase, and as the flexible member **200** decreases in size, the height of the flexible member **200** may decrease.

The fixed member **140** has a height. The fixed member **140** is generally formed of a rigid material. Thus, the shape of the fixed member is generally fixed. Thus, the height of the fixed member **140** does not significantly change.

This means that variations in the pressure within the enclosed cavity **211** can alter the height of the flexible member **200**, but the height of the fixed member **140** will stay the same. As explained below, the pressure in the enclosed cavity **211** can thus be controlled to vary the height of the flexible member **200** such that it is greater than the height of the fixed member **140**, or smaller than the height of the fixed member **140**.

In at least one configuration, the flexible member **200** may be configured to contact the underside of the substrate W when the substrate W is positioned on the substrate holder **101**. The flexible member **200** may be configured to form a seal between the substrate holder **101** and the substrate W. Thus, the flexible member **200** may be used to define a space

105 between the substrate W and the main body 110 in which a sealed environment is formed. The seal formed by the flexible member 200 may be used to substantially prevent fluid from passing out of the space 105 past the flexible member 200. Thus, pressure in the space 105 can be controlled by the substrate holder 101.

The flexible member 200 may form a seal with the underside of the substrate W in a first state, as depicted in FIG. 8A. The first state may be a configuration in which the substrate W is placed on the substrate holder 101. The first state may be prior to clamping the substrate W on the substrate holder 101. Thus, in the first state, the flexible member 200 may form a seal with the substrate W. However, the pressure in the space 105 formed by the seal may be the same as the pressure outside of the seal, i.e. outside of the space 105 on the other side of the flexible member 200.

During clamping of the substrate W, the substrate holder 101 may be configured to clamp the substrate W to the substrate holder 101. During clamping, the substrate holder 101 may be configured to reduce the pressure in the space 105 to hold the substrate W in place on the main body 110 of the substrate holder 101. Clamping of the substrate W to the substrate holder 101 may be carried out using known techniques, for example using at least one extraction opening 112 through which fluid can be extracted from the space 105, preferably to form a vacuum in the space 105. The at least one extraction opening 112 may be positioned in any appropriate place to remove fluid from the space 105. There may be multiple extraction openings 112. A second state may be a configuration in which the substrate W is being clamped to the substrate holder 101. In other words, the second state is during clamping of the substrate W to the substrate holder 101.

During clamping, i.e. during the second state, the substrate holder 101 may be configured to reduce a pressure in the enclosed cavity 210 of the flexible member 200. The pressure may be reduced such that the substrate W is supported on the substrate holder 101. Configurations showing clamping of the substrate W to the substrate holder 101, i.e. during the second state, are shown in FIGS. 8B, 8C and 8D.

As the pressure is reduced in the enclosed cavity 210, the shape of the flexible member 200 is altered. Specifically, the substrate holder 101 is configured to reduce the pressure in the enclosed cavity 200 to reduce the height of the flexible member 200. Thus, a seal may be formed between the fixed member 140 and the underside of the substrate W in the second state. The seal may be formed between the fixed member 140 and the substrate W due to variation in the height of the flexible member 200.

In the first state, the height of the flexible member 200 may be greater than the height of the fixed member 140, as depicted in FIG. 8A. Thus, in the first state, when the substrate W is placed on the substrate holder 101, the substrate W is supported on the flexible member 200 because it protrudes further from the surface 111 than the fixed member 140. Furthermore, the flexible member 200 may protrude further from the surface 111 than other features of the substrate holder 101. In the first state, the flexible member 200 may protrude further from the surface 111 of the main body 110 than all other components of the substrate holder 101 in an area on which the substrate W is to be placed. In other words, the flexible member 200 may form the highest structure on which the substrate W is to be placed. This means that during the first state, the flexible member 200 contacts the underside of the substrate W and forms a seal with the substrate W.

In the second state, the height of the flexible member 200 changes due to the reduction in pressure in the enclosed cavity 210 therein. The reduction in pressure may lead to a reduction in the height of the flexible member 200. Thus, in the second state, the height of the flexible member 200 may be reduced to equal to, or even less than, the fixed member 140. In other words, in the second state, the height of the fixed member 140 may be greater than or equal to the height of the flexible member 200.

As the height of the flexible member 200 reduces, the substrate W is moved towards the surface 111 of the main body 110. This is shown in FIG. 8B in which the substrate W is closer to the surface 111 than in FIG. 8A. When the height of the flexible member 200 is reduced to a certain extent (due to reduction of pressure in the enclosed cavity 210), a seal is formed between the fixed member 140 and the underside of the substrate W. This configuration is depicted in FIGS. 8C and 8D. As will be noted, the seal formed by the fixed member 140 and the substrate W may not require contact, for example, the fixed member 140 may provide a leaky seal. A leaky seal may be formed when the height of the fixed member 140 is slightly less than a height of the supporting pins 120 which leads to a small gap between a top of the fixed member 140 and the underside of the substrate W when the substrate W is supported on the supporting pins 120. Such a seal will still allow for pressure to be controlled within the space 105.

As indicated, the pressure in the enclosed cavity 210 can be controlled. This pressure may be controlled in a variety of ways. In a first variation for controlling the pressure, which is shown in FIGS. 8A-8D, pressure in the enclosed cavity 210 is controlled by controlling pressure in the space 105. This is due to a fluidic connection between the enclosed cavity 210 and the space 105 (and fluidic isolation from the environment outside the substrate holder 101). In a second variation for controlling the pressure, which is shown in FIG. 9, pressure in the enclosed cavity 210 is separately controlled. This is due to the enclosed cavity 210 being in fluidic isolation from the space 105 and the environment outside the substrate holder 101.

In the first variation for controlling the pressure, the enclosed cavity 210 is in fluidic connection with the space 105 between the substrate W and the main body 110 of the substrate holder 101, as shown in FIGS. 8A-8D. In other words, fluid in the enclosed cavity 210 can move to the space 105 and vice versa. Fluid can be extracted from the space 105 via the extraction opening 112. As fluid is extracted from the space 105, pressure reduces in the space 105. As fluid is extracted from the space 105, fluid is extracted from the enclosed cavity 210 and the pressure also reduces in the enclose cavity 210. As the pressure reduces in the enclosed cavity 210, this reduces the height of the flexible member 200 as discussed above.

In the first variation, the main body 110 may comprise an opening 113 in the surface 111 of the main body 110, as depicted in FIGS. 8A-8D. The opening 113 may be positioned inwards of the fixed member 140. The opening 113 being positioned inwards may mean radially inwards of the fixed member 140 in plan view. The opening 113 being positioned inwards may mean inwards of the fixed member 140 relative to the flexible member 200. In other words, the opening 113 may be positioned on the other side of the fixed member 140 to the flexible member 200. The opening 113 may be positioned on a part of the main body 110 which defines the space 105. The enclosed cavity 210 of the flexible member 200 may be in fluidic connection with the

opening **113**. This means that fluid can pass from the enclosed cavity **210** to the opening **113**.

In the first variation, the main body **110** may comprise a further opening **114** in the surface **111** of the main body **110**, as depicted in FIGS. **8**A-**8**D. The further opening **114** may be positioned outwards of the fixed member **140**. The further opening **114** being positioned outwards may mean radially outwards of the fixed member **140** in plan view. The further opening **114** being positioned outwards may mean outwards of the fixed member **140** relative to the flexible member **200**. In other words, the further opening **114** may be positioned on the same side of the fixed member **140** as the flexible member **200**. The further opening **114** may be positioned on a part of the main body **110** which is not in contact with the space **105**. The enclosed cavity **210** of the flexible member **200** may be in fluidic connection with the further opening **114**. This means that fluid can pass from the enclosed cavity **210** to the further opening **114**.

In the first variation, the main body **110** may further comprise a passageway **115** between the opening **113** and the further opening **114**. Thus, fluid can pass between the opening **113** and the further opening **114**. In this way, fluid can pass between the space **105** and the enclosed cavity **210** via the opening **113**, the further opening **114** and the passageway **115**. The opening **113**, further opening **114** and the passageway **115** may be of any appropriate size to allow passage of fluid as appropriate and to fit with other components of the substrate holder **101**. The further opening **114** is shown as being adjacent to the fixed member **140**, however, the further opening **114** could be positioned anywhere on the surface **111** which provides fluidic connection with the space **105**.

In the first variation, the flexible member **200** may be provided over the further opening **114**. Thus, the flexible member **200** may form the enclosed cavity **210** with the further opening **114**. The flexible member **200** may be connected to the surface **111** of the main body **110** around or near the further opening **114**. The flexible member **200** may be provided over the further opening **114** in a fluid tight manner. The further opening **114** may be the only opening in the enclosed cavity **210**. Thus, fluid in the enclosed cavity **210** may only pass in and out of the enclosed cavity **210** via the further opening **114**.

Before the substrate W is placed on the substrate holder **101**, the surrounding pressure is the ambient pressure (which may be atmospheric pressure or a set pressure, depending on the environment around the substrate holder **101**). When the substrate W is placed on the substrate holder **101**, the pressure in the space **105** and surrounding the substrate holder **101** is the ambient pressure. This is depicted in FIG. **8**A.

During clamping, pressure in the space **105** is reduced, for example, due to removal of fluid from the space **105** via the extraction opening **112**. Thus, the pressure in space **105** is less than the ambient pressure outside of the substrate W and the main body **110**. A lower pressure can be maintained in the space **105** due to the seal formed between the substrate W and the flexible member **200**.

As the pressure in the space **105** reduces, the pressure within the enclosed cavity **210** of the flexible member **200** reduces, which changes the shape of the flexible member **200**. As the shape of the flexible member **200** changes, the height of the flexible member **200** is reduced as shown in FIG. **8**B, which results in the substrate W moving closer to the main body **110** of the substrate holder **101**.

The pressure may be reduced further by extracting additional fluid from the space **105** as shown in FIG. **8**C. Thus, the pressure in the space **105** in FIG. **8**C is less than the pressure in the space **105** in FIG. **8**B. In this case, the pressure also reduces further in the enclosed cavity **210**. This further reduction in pressure reduces the height of the flexible member **200**, which is shown in FIG. **8**C. When the pressure reaches a certain minimum value, the seal between the fixed member **140** and the underside of the substrate W will be formed. In this configuration, a seal is provided by the fixed member **140** to maintain the pressure in the space **105**. In this configuration, the height of the flexible member **200** may be substantially equal to, or less than, the height of the fixed member **140**.

The pressure in the space **105** may optionally be reduced further. This will further reduce the pressure in the flexible member **200** and further reduce the height of the flexible member **200**. In this configuration, the height of the flexible member **200** is less than the height of the fixed member **140**, as depicted in FIG. **8**D. In this case, the flexible member does not contacts the underside of the substrate W. In this case, the substrate W is supported on the substrate holder **101**, and the seal formed by the fixed member **140** maintains the reduced pressure in the space **105**.

Although the enclosed cavity **210** is shown in fluidic connection with the space **105** in FIGS. **8**A-**8**D, this is not a necessity. In the second variation for controlling the pressure in the enclosed cavity **210**, fluid in the enclosed cavity **210** may not interact with fluid in the space **105**. Thus, pressure in the enclosed cavity **210** may be controlled separately from pressure in the space **105**. For example, as shown in FIG. **9**, the substrate holder **101** may comprise a pressure device **220** configured to control the pressure in the enclosed cavity **210**.

In the second variation, opening **116** may be provided in the surface **111** of the main body **110** (and which may correspond to the further opening **114** described above). The flexible member **200** may be provided over the opening **116**. Thus, the flexible member **200** may form the enclosed cavity **210** with the opening **116**. The flexible member **200** may be connected to the surface **111** of the main body **110** around or near the opening **116**. The flexible member **200** may be provided over the opening **116** in a fluid tight manner. The opening **116** may be the only opening in the enclosed cavity **210**. Thus, fluid in the enclosed cavity **210** may only pass in and out of the enclosed cavity **210** via the opening **116**.

Providing the pressure device **220** may be slightly more complicated than the first variation due to the additional control needed for the pressure device **220**. However, advantageously, there is greater design freedom with the second variation because the enclosed cavity **210** is not provided in fluidic connection with the space **105**. Specifically, in the first variation, the flexible member **200** should be positioned outwards of the fixed member **140** so that the variation in pressure in the space **105** can be used to vary pressure in the enclosed cavity **210**. No such consideration needs to be made for the second variation.

Although a different mechanism is used in the second variation, it will be understood that the pressure in the flexible member **200** may be controlled in a similar way in the second variation and the first variation, to provide a higher pressure to form a seal with the flexible member **200** as in FIG. **8**A, and to reduce the pressure in the enclosed cavity **210** to reduce the height of the flexible member **200** as shown in any of FIGS. **8**B, **8**C and **8**D. Any appropriate pressure device **220** may be provided, as long as it can be used to appropriately reduce the pressure within the enclose

cavity **210** and provide adequate control of the pressure to vary the flexible member **200** as described in relation to FIGS. **8**A-**8**D.

The fixed member **140** may be positioned adjacent to the flexible member **200**. For example, the fixed member **140** may be positioned as protruding from the main body **110** without any other protrusions between the fixed member **140** and the flexible member **200**. The distance between the fixed member **140** and the flexible member **200** may be approximately 0.2 mm to 5 mm. As shown in **8**A-**8**D, the shape of the flexible member **200** may change between the first state and the second state, such that a distance of at least 0.2 mm may be useful to ensure that there is no contact between the flexible member **200** and the fixed member **140** to reduce or prevent wear of the flexible member **200**. The distance may be larger than 5 mm. However, the distance is preferably approximately 5 mm or less due to the overall size of the substrate holder **101** and other components being provided on the substrate holder **101**.

The fixed member **140** may be positioned inwards of the flexible member **200**. For example, the fixed member **140** may be positioned inwards of the flexible member **200** relative to the edge of the substrate holder **101**. The flexible member **200** may be positioned outwards of the fixed member **140** relative to, for example, a feature and/or the space **105**, surrounded by both the fixed member **140** and the flexible member **200**, i.e. the fixed member **140** may have a feature on one side and the flexible member **200** on the other side. The fixed member **140** being positioned inwards may mean radially inwards of the flexible member **200** in plan view. The flexible member **200** may be positioned surrounding the fixed member **140**. In other words, the flexible member **200** may be positioned around the outside of the fixed member **140**, e.g. relative to a feature and/or the space inwards of the fixed member **140**. In FIGS. **8**A-**8**D, **9** and **10**, the substrate holder **101** is shown with the flexible member **200** as being provided toward an outside edge of the substrate holder **101** and the fixed member **140** being provided inwards of the flexible member **200**. Other configurations are also possible. For example, the flexible member **200** may be positioned inwards of the fixed member **140**. The flexible member **200** may be positioned inwards of the fixed member **140** relative to the edge of the substrate holder **101**. The fixed member **140** may be positioned outwards of the flexible member **200** relative to, for example, a feature and/or the space **105**, surrounded by both the fixed member **140** and the flexible member **200**, i.e. the flexible member **200** may have a feature on one side and the fixed member **140** on the other side. The flexible member **200** being positioned inwards may mean radially inwards of the fixed member **140** in plan view. The fixed member **140** may be positioned surrounding the flexible member **200**. In other words, the fixed member **140** may be positioned around the outside of the flexible member **200**, e.g. relative to a feature and/or the space inwards of the flexible member **200**.

Although the configurations shown in FIGS. **8**A-**8**D, **9** and **10** show the fixed member **140** and the flexible member **200** positioned around the edge of the substrate holder **101**, this is not necessary. The flexible member **140** and the fixed member **200** may be positioned in other locations. The fixed member **140** and the fixed member **200** may be positioned anywhere on the substrate holder **101** to provide the appropriate seal/seals prior to, and during clamping.

Multiple fixed members **140** and flexible members **200** may be provided in different locations. For example a first fixed member **140** and first flexible member **200** may be provided around the edge of the substrate holder **101**, and a second fixed member **140** and a second flexible member **200** may be provided around a feature on the substrate holder **101**, such as a hole, e.g. for extracting fluid. Additional fixed member(s) **140** and flexible member(s) **200** may also be provided around additional or alternative features.

For example, the substrate holder **101** may comprise at least one hole which may be in fluidic connection with an environment outside the space **105**. The at least one hole may be the extraction opening **112**. The at least one hole may be provided in which a lifting mechanism is positioned to raise and/or lower the substrate W during clamping. Thus, the flexible member **200** and fixed member **140** may be provided surrounding the at least one hole of the substrate holder **101**. The flexible member **200** may surround the fixed member **140** or vice versa. The flexible member **200** may be inwards of the fixed member **140** as described above, meaning that the flexible member **200** is closer to the at least one hole than the fixed member **140**. In other words, the fixed member **140** may be positioned surrounding the flexible member **200**. Alternatively, the fixed member **140** may be inwards of the flexible member **200** as described above, meaning that the fixed member **140** is closer to the at least one hole. In other words, the flexible member **200** may be positioned surrounding the fixed member **140**.

Additionally or alternatively, if a sensor (not depicted in figures) is positioned on the surface **111** of the main body **110**, the flexible member **200** and the fixed member **140** may be positioned surrounding the at least one sensor. The flexible member **200** may surround the fixed member **140** or vice versa. The flexible member **200** may be inwards of the fixed member **140** as described above, meaning that the flexible member **200** is closer to the at least one sensor than the fixed member **140**. In other words, the fixed member **140** may be positioned surrounding the flexible member **200**. Alternatively, the fixed member **140** may be inwards of the flexible member **200** as described above, meaning that the fixed member **140** is closer to the at least one sensor. In other words, the flexible member **200** may be positioned surrounding the fixed member **140**.

Additionally or alternatively, as shown in at least FIGS. **8**A-**8**D, the main body **110** comprises supporting pins **120** on the surface of the main body **110**. Although the supporting pins **20** of FIGS. **8**A-**8**D, **9** and **10** are shown as substantially frustoconical, the supporting pins **30** may be any shape, and could be cylindrical as shown in at least FIG. **5** of the first embodiment. The flexible member **200** and fixed member **140** may surround the supporting pins **120**. In other words, the flexible member **200** and the fixed member **140** may be formed around the supporting pins in plan view, i.e. in a view perpendicular to the x-y plane. The flexible member **200** may surround the fixed member **140** or vice versa. The flexible member **200** may be inwards of the fixed member **140** as described above, meaning that the flexible member **200** is closer to the supporting pins **120** than the fixed member **140**. In other words, the fixed member **140** may be positioned surrounding the flexible member **200**. Alternatively, the fixed member **140** may be inwards of the flexible member **200** as described above, meaning that the fixed member **140** is closer to the supporting pins **120**. In other words, the flexible member **200** may be positioned surrounding the fixed member **140**.

Using flexible material for the flexible member **200** means that the flexible member **200** may move in different directions, such as in the X-Y plane. This may be advantageous in allowing the flexible member **200** to move relative to the substrate W as the substrate W is positioned on the substrate

holder **101**. This might beneficially reduce frictional forces between the substrate W and the substrate holder **101** during loading, and may thus, lead to a reduction in in-plane deformation in the substrate W.

Preferably, the flexible member **200** is made of a material which can maintain its shape when in ambient pressure (which may be atmospheric pressure) as shown in FIG. **8**A to support the substrate W. Preferably the material can be elastically deformed to reduce the height of the flexible member **200** as shown in FIGS. **8**B-**8**D. Preferably the material can then return to its original shape when the pressure is returned to ambient pressure as in FIG. **8**A. The flexible member **200** may be made of any appropriate material. For example only, the flexible member **200** may comprise thermoplastic, Viton, rubber, and/or metal. The flexible member **200** may be formed of a combination of any of these materials, or at least one of these materials in combination with another material. The flexible member **200** may be formed of a single material. The flexible member may be formed of multiple materials.

Over time there may be wear of the flexible member **200**, particularly the part which contacts the substrate W. It will be noted that a proximal portion of the flexible member **200** may be connected to the surface **111** of the main body **110**, and a distal portion of the flexible member **200**, i.e. a top part in FIGS. **8**A-**8**D, may be configured to contact the underside of the substrate W (in at least the first stage). Thus, at least the distal portion of the flexible member **200**, which is the portion of the flexible member **200** which contacts the substrate W, may wear over time.

To reduce or prevent wear, at least a portion of the flexible member **200** may comprise wear resistant material. Preferably, at least the distal portion comprises wear resistant material. In an example, the flexible member **200** may comprise a wear resistant coating. The wear resistant coating may be provided around the whole of an outside surface of the flexible member **200**. The wear resistant coating may only be provided on the distal portion of the flexible member **200**, or at least the distal portion of the flexible member **200**. The wear resistant coating may be formed of any appropriate material. For example only, the wear resistant coating may comprise synthetic diamond, a polyetherimide (PEI) film, a polyetheretherketone (PEEK) film, and/or polytetrafluoroethylene (e.g. Teflon). Additionally or alternatively, the material forming the flexible member **200**, or at least part of the flexible member **200**, may contain wear resistant material. The wear resistant material may be any appropriate material which is resistant to, or reduces wear. For example only, the wear resistant material may be a thermoplastic, for example polyetherimide (PEI) e.g. static dissipative PEI such as SEMITRON ESD **410** (PEI) BLACK. Other examples include polyetheretherketone (PEEK), alumina, silicon carbide (SiC), and/or stainless steel, e.g. AISI 420. Specifically, the distal portion of the flexible member **200** may be wear resistant. This is shown, for example, in FIG. **10** in which the flexible member **200** comprises a first portion **201** made of a first material and a second portion **202** made of a second material. The first material may be any material or combination of materials comprising a thermoplastic, Viton, rubber, and/or metal as described above. The second material may be any wear resistant material.

A controller **100** may be provided to control the pressure in the flexible member **200**. The controller **100** may be used to control extraction of fluid from the at least one extraction opening **112** and/or to control pressure device **220**. The controller **100** may be the same controller as described above. Thus, the controller **100** may be used to control any features of the first and/or second embodiment which are present. Alternatively, the controller may be separate from the controller **100**. Even if the controller is separate, it may still have the same features as the controller **100** as described above.

Advantages of the second embodiment may include at least, increased warped clampability of substrates W on table-like (wafer handler storage unit burl table, wafer table, substrate table/support, wafer handler temperature stabilisation unit) sub-modules which have sufficient clamp force to maintain a flat substrate W. Providing a seal using the flexible member **200** which helps during clamping, but does not touch the substrate W in the ultimate clamped state if desirable. Providing the flexible member **200** as a wear resistant moveable part that is also flexible. As described, the flexible member **200** and fixed member **140** can be applied in various locations to improve formation of a seal/clamping. In addition to improving clampability, the use of the flexible member **200** and the fixed member **140** as described may allow the clamp vacuum to build up more evenly in time and space, which may be beneficial in reducing the local hysteresis.

It will be understood that there are corresponding features of the first embodiment and the second embodiment. These corresponding features (some, but not all, of which are listed here) may be interchangeable. For example, at least the substrate holder **1** of the first embodiment may be interchangeable with the substrate holder **101** of the second embodiment. For example, at least the extraction opening **12** of the first embodiment may be interchangeable with the at least one extraction opening **112** of the second embodiment. For example, at least the plurality of supporting pins **20** of the first embodiment may be interchangeable with the supporting pins **120** of the second embodiment. For example, at least the fixed sealing member **40** of the first embodiment may be interchangeable with the fixed member **140** of the second embodiment. For example, at least the surface **11** of the first embodiment may be interchangeable with the surface **111** of the second embodiment. For example, at least the main body **10** of the first embodiment may be interchangeable with the main body **110** of the second embodiment.

The features of the second embodiment may be provided in combination with the features of the first embodiment including any of the variations as described above. For example, the substrate holder **101** of the second embodiment may comprise the plate **30** as described in any of the above variations. FIG. **11** is provided for example only, to show the plate **30** as in FIG. **2** in combination with the substrate holder of FIG. **8**A. The supporting pins **120** in FIG. **11** are provided as cylindrical pins out of preference, however, this is not a necessity. The features relating to the plate **30** as shown in any of FIGS. **2**-**7**B may be provided in combination with features relating to the flexible member **200** as shown in any of FIGS. **8**A-**10**.

Similarly, the first embodiment may be provided with any of the features of the second embodiment. It will be noted that the moveable member **60**, **80** of the first embodiment may be provided in addition to the flexible member **200** of the second embodiment. Alternatively, the moveable member **60**, **80** of the first embodiment may comprise the features of the flexible member **200**, such as the enclosed cavity **210**.

Thus, in the first embodiment, the movable member **60**, **80** may be flexible and define an enclosed cavity **210** therein. The movable member **60**, **80** may be configured to form a seal with an underside of the substrate W in a first state (the first state being as described in relation to the second embodiment). The main body **10** of the substrate holder **1**

may comprise a fixed member **140** protruding from the surface **11** of the main body **10** and having a height. In a second state (the second state being as described in relation to the second embodiment), the substrate holder **1** is configured to reduce a pressure in the enclosed cavity **210** of the movable member such that the substrate W is supported on the substrate holder **1**. In this case, the moveable member **60**, **80** and/or substrate holder **1** may comprise any of the other features or variations as described in relation to the second embodiment.

In the second embodiment, a lithographic apparatus may be provided which comprises a substrate holder **101** as in any of the variations of the second embodiment (optionally including any features/variations of the first embodiment) described above. The lithographic apparatus may have any of the features described above in relation to the second embodiment (optionally including any features/variations of the first embodiment) and/or shown in relation to FIG. **1**.

The second embodiment may further provide a method of clamping a substrate W to a substrate holder using the substrate holder **101**. The method comprising providing the substrate holder **101** as described in any of the variations of the second embodiment. The method further comprises providing the substrate W on the substrate holder **101**, wherein the flexible member **200** contacts an underside of the substrate W prior to clamping the substrate W to the substrate holder **101**. Clamping the substrate W to the substrate holder **101**, for example, by extracting fluid from the at least one extraction opening **112** below the substrate W. The method comprises reducing the pressure in the enclosed cavity **210** of the flexible member **200** during clamping such that the substrate W is supported on the substrate holder **101**. Preferably, the steps of the method are carried out in the order described herein.

Although specific reference may be made in this text to the use of lithographic apparatus in the manufacture of ICs, it should be understood that the lithographic apparatus described herein may have other applications, such as the manufacture of integrated optical systems, guidance and detection patterns for magnetic domain memories, flat-panel displays, liquid-crystal displays (LCDs), thin film magnetic heads, etc. The skilled artisan will appreciate that, in the context of such alternative applications, any use of the terms "wafer" or "die" herein may be considered as synonymous with the more general terms "substrate" or "target portion", respectively. The substrate referred to herein may be processed, before or after exposure, in for example a track (a tool that typically applies a layer of resist to a substrate and develops the exposed resist), a metrology tool and/or an inspection tool. Where applicable, the disclosure herein may be applied to such and other substrate processing tools. Further, the substrate may be processed more than once, for example in order to create a multi-layer IC, so that the term substrate used herein may also refer to a substrate that already contains one or multiple processed layers.

Although specific reference may have been made above to the use of embodiments of the invention in the context of optical lithography, it will be appreciated that the invention may be used in other applications.

While specific embodiments of the invention have been described above, it will be appreciated that the invention may be practiced otherwise than as described.

The descriptions above are intended to be illustrative, not limiting. Thus, it will be apparent to one skilled in the art that modifications may be made to the invention as described without departing from the scope of the claims set out below.

The invention claimed is:

1. A substrate holder for supporting a substrate, the substrate holder comprising:

a main body having a surface;

a plurality of supporting pins connected to the surface of the main body at proximal ends of the plurality of supporting pins, wherein distal ends of the plurality of supporting pins form a support surface for a substrate;

a plate comprising a plurality of openings, the plate being positioned between the surface of the main body and the support surface; and

a structure surrounding the plurality of supporting pins and protruding from the surface of the main body, wherein the structure is configured to be movable or flexible in the direction along the plurality of supporting pins,

wherein all of the plurality of supporting pins connected to the surface of the main body have a corresponding opening of the plurality of openings of the plate, and

wherein the plate is actuatable in a direction along the plurality of supporting pins between the surface of the main body and the support surface.

2. The substrate holder of claim **1**, configured to extract fluid from between the substrate, when supported on the support surface, and the plate.

3. The substrate holder of claim **2**, wherein the main body comprises at least one extraction opening for passage of fluid therethrough, and the plate comprises at least one extractor portion for passage of fluid therethrough, an extraction portion of the at least one extractor portion spatially aligning to an extraction opening of the at least one extraction opening.

4. The substrate holder of claim **1**, wherein the plate is substantially flat and is substantially parallel to the support surface.

5. The substrate holder of claim **1**, wherein the plate is actuatable to a desired position depending on data relating to one or more selected from:

a shape of the substrate when on the support surface;

a pressure between the substrate, when supported on the support surface, and the surface of the main body; and/or

a flow rate of fluid extracted from between the substrate, when supported on the support surface, and the surface of the main body.

6. The substrate holder of claim **1**, further comprising a plurality of actuators configured to move the structure, and/or

wherein the substrate holder is configured to move the structure to a desired position depending on data relating to one or more selected from:

(i) a shape of the substrate when on the support surface;

(ii) a pressure between the substrate, when supported on the support surface, and the surface of the main body; and/or

a flow rate of fluid extracted from between the substrate, when supported on the support surface, and the surface of the main body.

7. The substrate holder of claim **1**, wherein the structure is configured to be flexible and defines an enclosed cavity therein, the structure having a height and being configured to form a seal with an underside of the substrate in a first state, and wherein in a second state, the substrate holder is configured to reduce a pressure in the enclosed cavity of the structure such that the substrate is supported on the substrate holder.

8. The substrate holder of claim **7**, wherein the substrate holder is configured to reduce the pressure in the enclosed

cavity to reduce the height of the structure in the second state, and to form a seal between the underside of the substrate and a fixed structure protruding from the surface of the main body.

9. The substrate holder of claim **7**, where the first state is prior to clamping the substrate on the substrate holder and the second state is during clamping the substrate on the substrate holder.

10. The substrate holder of claim **1**, wherein the structure is positioned adjacent to, and radially outwards of, an edge of the plate.

11. The substrate holder of claim **1**, further comprising a fixed structure surrounding the plurality of supporting pins and protruding from the surface of the main body, wherein the fixed structure is positioned adjacent to, and radially outwards of, an edge of the plate, and adjacent to, and radially inwards of, the structure.

12. A method of supporting a substrate on a substrate holder, the method comprising:

providing a substrate to the substrate holder, the substrate holder comprising:

a main body having a surface;

a plurality of supporting pins connected to the surface of the main body at proximal ends of the plurality of supporting pins, wherein distal ends of the plurality of supporting pins form a support surface for a substrate;

a plate comprising a plurality of openings, the plate being positioned between the surface of the main body and the support surface; and

a structure surrounding the plurality of supporting pins and protruding from the surface of the main body, wherein the structure is movable or flexible in a direction along the plurality of supporting pins,

wherein all of the plurality of supporting pins connected to the surface of the main body have a corresponding opening of the plurality of openings of the plate;

moving the plate in the direction along the plurality of supporting pins between the surface of the main body and the support surface; and

extracting fluid from a space between the plate and the substrate.

13. A lithographic apparatus comprising:

the substrate holder of claim **1**; and

a projection system configured to expose a substrate.

14. The substrate holder of claim **1**, further comprising a plurality of actuators configured to actuate the plate.

15. The method of claim **12**, wherein the plate is substantially flat and is substantially parallel to the support surface.

16. The method of claim **12**, wherein the moving further comprises moving the plate to a desired position depending on data relating to one or more selected from:

a shape of the substrate on the support surface;

a pressure between the substrate and the surface of the main body; and/or

a flow rate of fluid extracted from between the substrate and the surface of the main body.

17. The method of claim **12**, further comprising moving the structure to a desired position depending on data relating to one or more selected from:

(i) a shape of the substrate on the support surface;

(ii) a pressure between the substrate and the surface of the main body; and/or

(iii) a flow rate of fluid extracted from between the substrate and the surface of the main body.

18. The method of claim **12**, further comprising obtaining data relating to one or more selected from: a shape of the substrate on the support surface, a pressure between the substrate and the surface of the main body, and/or a flow rate of fluid extracted from between the substrate and the surface of the main body and wherein the moving is performed based on the obtained data.

19. A substrate holder for supporting a substrate, the substrate holder comprising:

a main body having a surface;

a plurality of supporting pins connected to the surface of the main body at proximal ends of the plurality of supporting pins, wherein distal ends of the plurality of supporting pins form a support surface for a substrate; and

a plate comprising a plurality of openings, the plate being positioned between the surface of the main body and the support surface, wherein all of the plurality of supporting pins connected to the surface of the main body have a corresponding opening of the plurality of openings of the plate; and

a controller configured to cause actuation of the plate, after the substrate contacts the support surface, in a direction along the plurality of supporting pins between the surface of the main body and the support surface.

20. The substrate holder of claim **19**, further comprising a structure surrounding the plurality of supporting pins and protruding from the surface of the main body, wherein the structure is configured to be movable or flexible in the direction along the plurality of supporting pins.

* * * * *