US012389637B2

(12) **United States Patent**
Ishiduki et al.

(10) **Patent No.: US 12,389,637 B2**
(45) **Date of Patent: *Aug. 12, 2025**

(54) **NONVOLATILE SEMICONDUCTOR MEMORY DEVICE INCLUDING A MEMORY CELL**

(71) Applicant: **KIOXIA CORPORATION**, Tokyo (JP)

(72) Inventors: **Megumi Ishiduki**, Yokkaichi Mie (JP); **Hiroshi Nakaki**, Yokkaichi Mie (JP); **Takamasa Ito**, Nagoya Aichi (JP)

(73) Assignee: **KIOXIA CORPORATION**, Tokyo (JP)

(*) Notice: Subject to any disclaimer, the term of this patent is extended or adjusted under 35 U.S.C. 154(b) by 0 days.

This patent is subject to a terminal disclaimer.

(21) Appl. No.: **18/537,954**

(22) Filed: **Dec. 13, 2023**

(65) **Prior Publication Data**

US 2024/0120395 A1 Apr. 11, 2024

Related U.S. Application Data

(63) Continuation of application No. 17/825,542, filed on May 26, 2022, now Pat. No. 11,888,041, which is a (Continued)

(30) **Foreign Application Priority Data**

Mar. 22, 2018 (JP) 2018-055371

(51) **Int. Cl.**
H01L 29/423 (2006.01)
H01L 29/66 (2006.01)
(Continued)

(52) **U.S. Cl.**
CPC ***H10D 30/696*** (2025.01); ***H10B 43/10*** (2023.02); ***H10B 43/27*** (2023.02); ***H10B 43/50*** (2023.02);
(Continued)

(58) **Field of Classification Search**
CPC H01L 29/42344; H01L 29/66833; H01L 29/7926; H01L 21/76895; H01L 23/528;
(Continued)

(56) **References Cited**

U.S. PATENT DOCUMENTS

9,520,407 B2 12/2016 Fukuzumi et al.
10,797,144 B2 * 10/2020 Ishiduki H01L 29/7926
(Continued)

FOREIGN PATENT DOCUMENTS

JP 2013-120845 6/2013
JP 2015-149413 8/2015

Primary Examiner — Patricia D Valenzuela
(74) *Attorney, Agent, or Firm* — Oblon, McClelland, Maier & Neustadt, L.L.P.

(57) **ABSTRACT**

A semiconductor device includes a base body, a stacked body on the base body and a first columnar part. The base body includes a substrate, a first insulating film on the substrate, a first conductive film on the first insulating film, and a first semiconductor part on the first conductive film. The stacked body includes conductive layers and insulating layers stacked alternately in a stacking direction. The first columnar part is provided inside the stacked body and the first semiconductor part. The first columnar part includes a semiconductor body and a memory film between the semiconductor body and conductive layers. The semiconductor body extends in the stacking direction. The first columnar part has a first diameter and a second diameter in a first direction crossing the stacking direction. The first diameter inside the first semiconductor part is larger than the second diameter inside the stacked body.

20 Claims, 60 Drawing Sheets

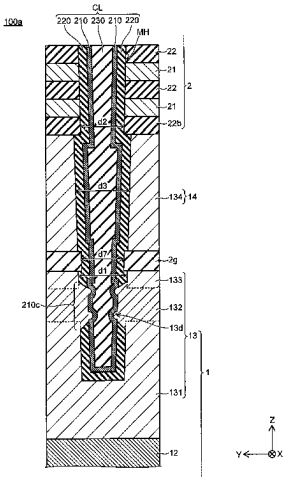

Related U.S. Application Data

continuation of application No. 17/009,373, filed on Sep. 1, 2020, now Pat. No. 11,380,770, which is a continuation of application No. 16/130,432, filed on Sep. 13, 2018, now Pat. No. 10,797,144.

(51) **Int. Cl.**

H10B 43/10	(2023.01)
H10B 43/27	(2023.01)
H10B 43/50	(2023.01)
H10D 30/01	(2025.01)
H10D 30/69	(2025.01)
H01L 21/768	(2006.01)
H01L 23/528	(2006.01)
H10B 41/20	(2023.01)
H10B 41/27	(2023.01)
H10B 43/30	(2023.01)
H10B 43/35	(2023.01)
H10B 43/40	(2023.01)
H10B 99/00	(2023.01)
H10D 84/00	(2025.01)

(52) **U.S. Cl.**

CPC ***H10D 30/0413*** (2025.01); ***H10D 30/693*** (2025.01); *H01L 21/76895* (2013.01); *H01L 23/528* (2013.01); *H10B 41/20* (2023.02); *H10B 41/27* (2023.02); *H10B 43/30* (2023.02); *H10B 43/35* (2023.02); *H10B 43/40* (2023.02); *H10B 99/00* (2023.02); *H10D 84/00* (2025.01)

(58) **Field of Classification Search**

CPC H01L 27/10; H10B 43/10; H10B 43/27; H10B 43/50; H10B 41/20; H10B 43/30; H10B 43/35; H10B 43/40; H10B 99/00; H10B 41/27

See application file for complete search history.

(56) **References Cited**

U.S. PATENT DOCUMENTS

2010/0144133	A1	6/2010	Nomura	
2012/0156848	A1*	6/2012	Yang	H10B 43/40 257/E21.597
2012/0244673	A1*	9/2012	Shinohara	H01L 29/7926 257/E21.423
2013/0003433	A1	1/2013	Hishida	
2013/0126961	A1	5/2013	Fukuzumi	
2016/0260736	A1	9/2016	Fujii	
2016/0365249	A1	12/2016	Nakao	
2017/0077131	A1	3/2017	Konagai et al.	

* cited by examiner

FIG. 1A

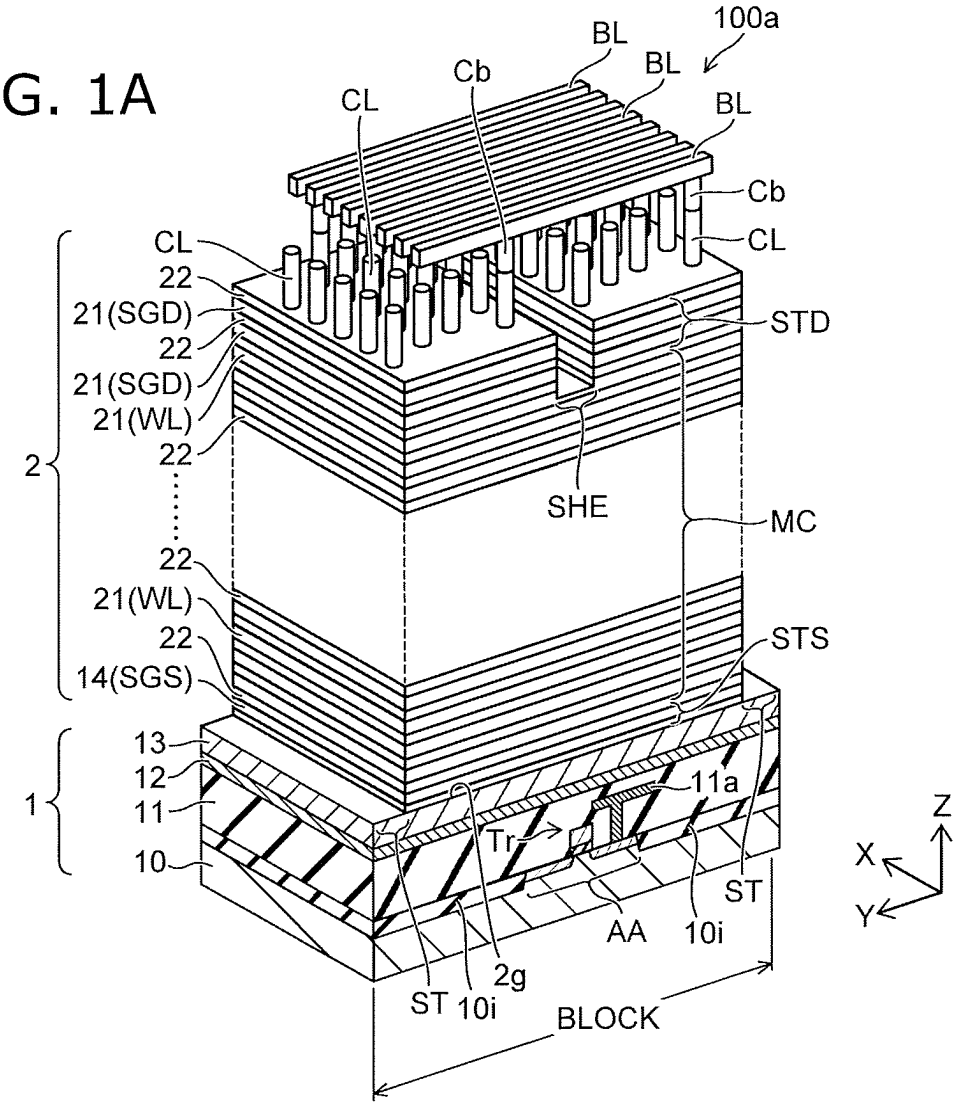
100a
BL
BL
BL
Cb
CL
Cb
CL
CL
22
21(SGD)
22
21(SGD)
21(WL)
22
2
22
21(WL)
22
14(SGS)
13
12
11
1
10
STD
SHE
MC
STS
11a
Tr
AA
10i
ST
2g
ST
10i
BLOCK
Z
X
Y

FIG. 1B

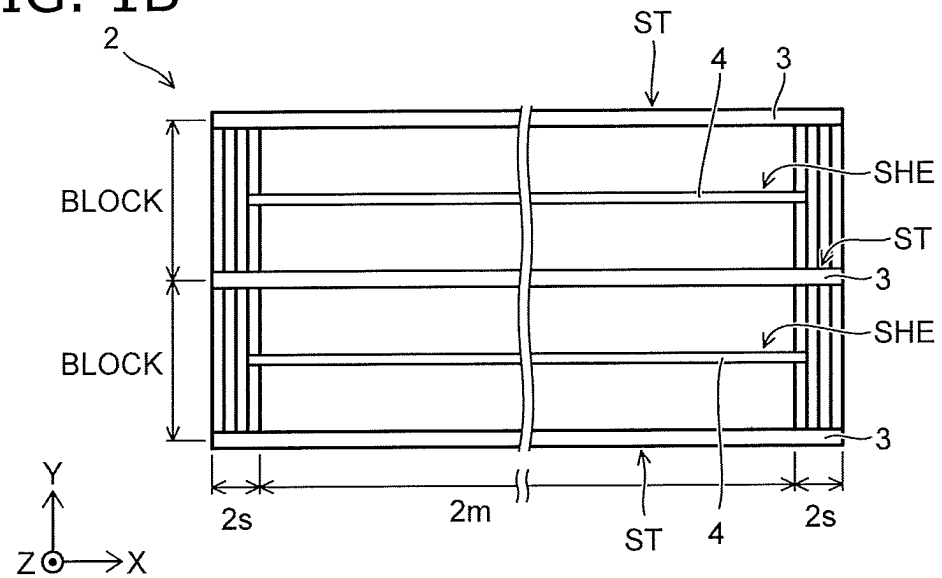
2
ST
4
3
SHE
ST
3
SHE
3
BLOCK
BLOCK
2s
2m
ST
4
2s
Y
Z
X

FIG. 2A

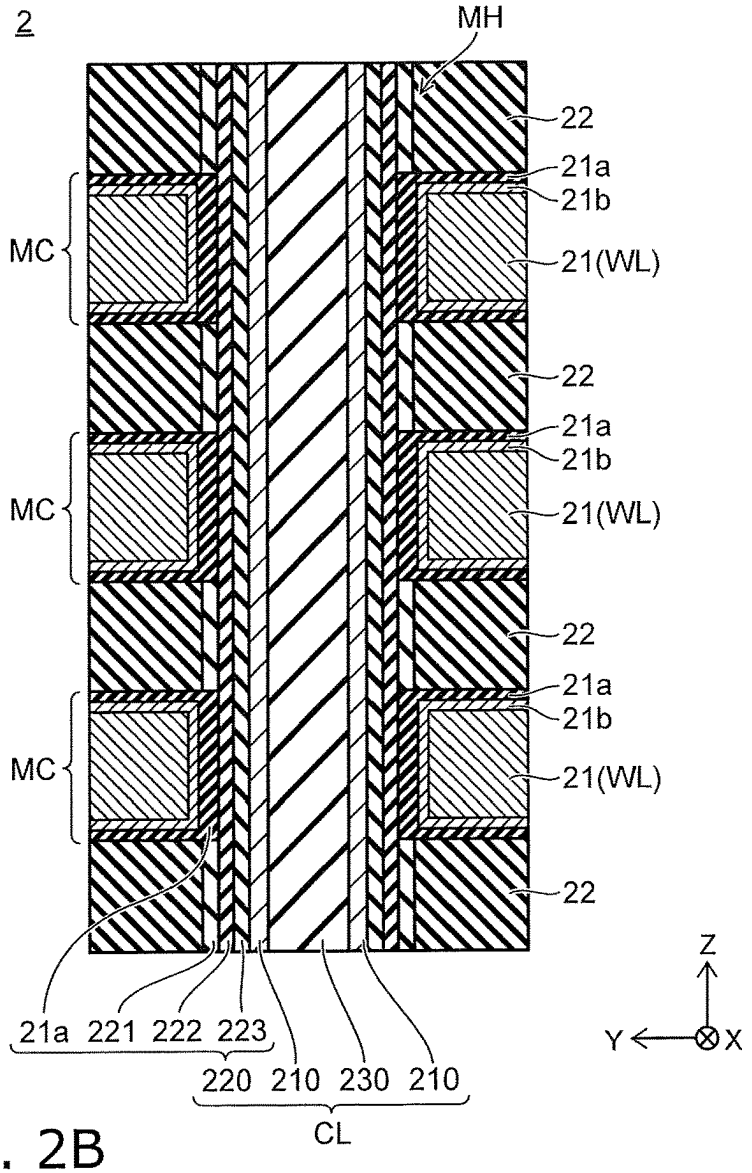
2
MH
22
21a
21b
MC
21(WL)
22
21a
21b
MC
21(WL)
22
21a
21b
MC
21(WL)
22
21a 221 222 223
220 210 230 210
CL
Z
Y
X

FIG. 2B

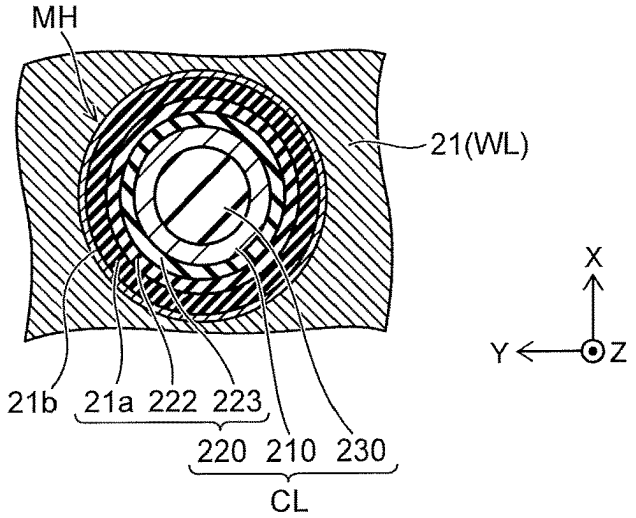
MH
21(WL)
21b 21a 222 223
220 210 230
CL
X
Y
Z

FIG. 3

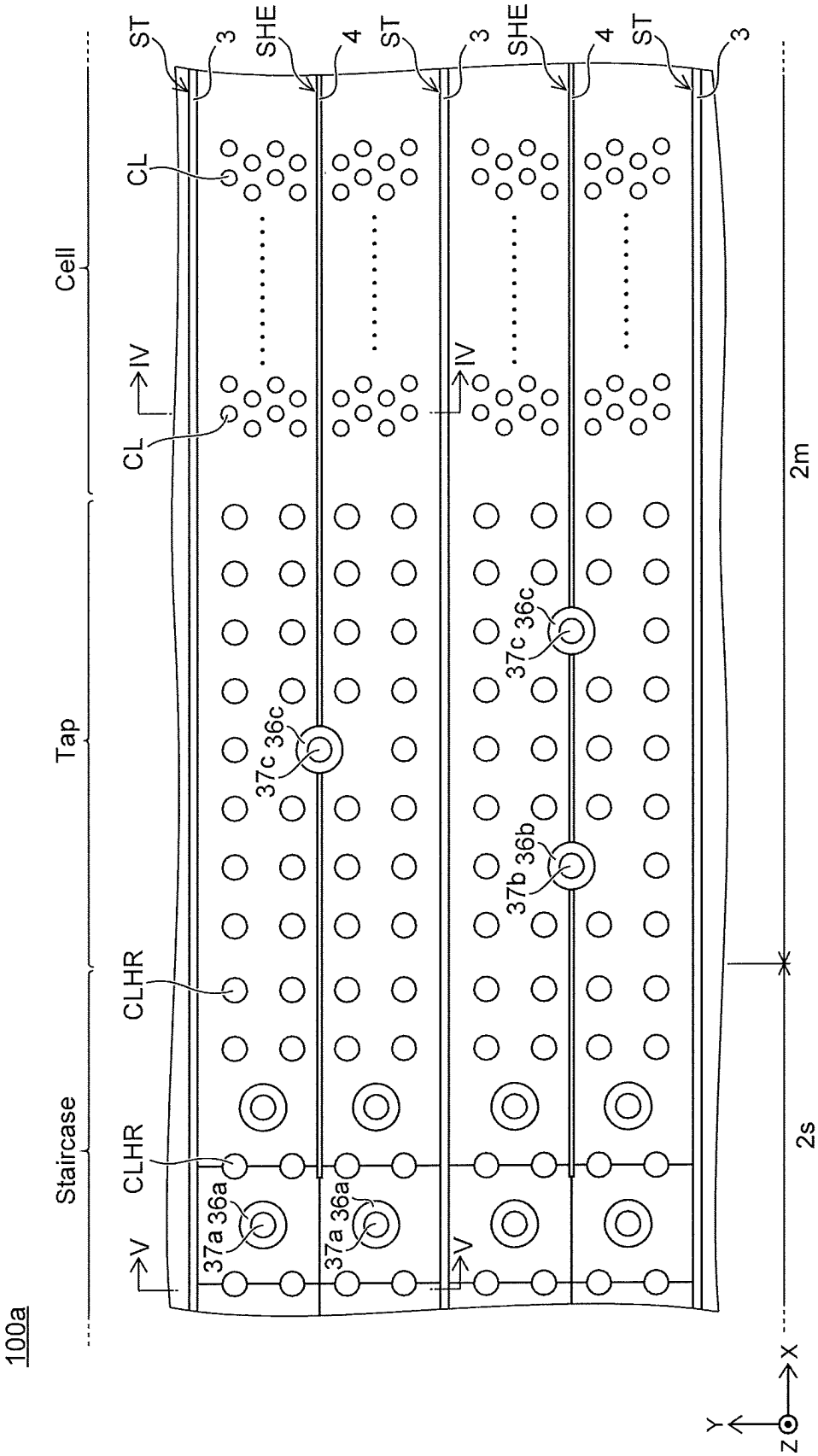
100a
Staircase
Tap
Cell
ST
3
SHE
4
CL
IV
CLHR
V
37a 36a
37b 36b
37c 36c
2m
2s
X
Y
Z

FIG. 4

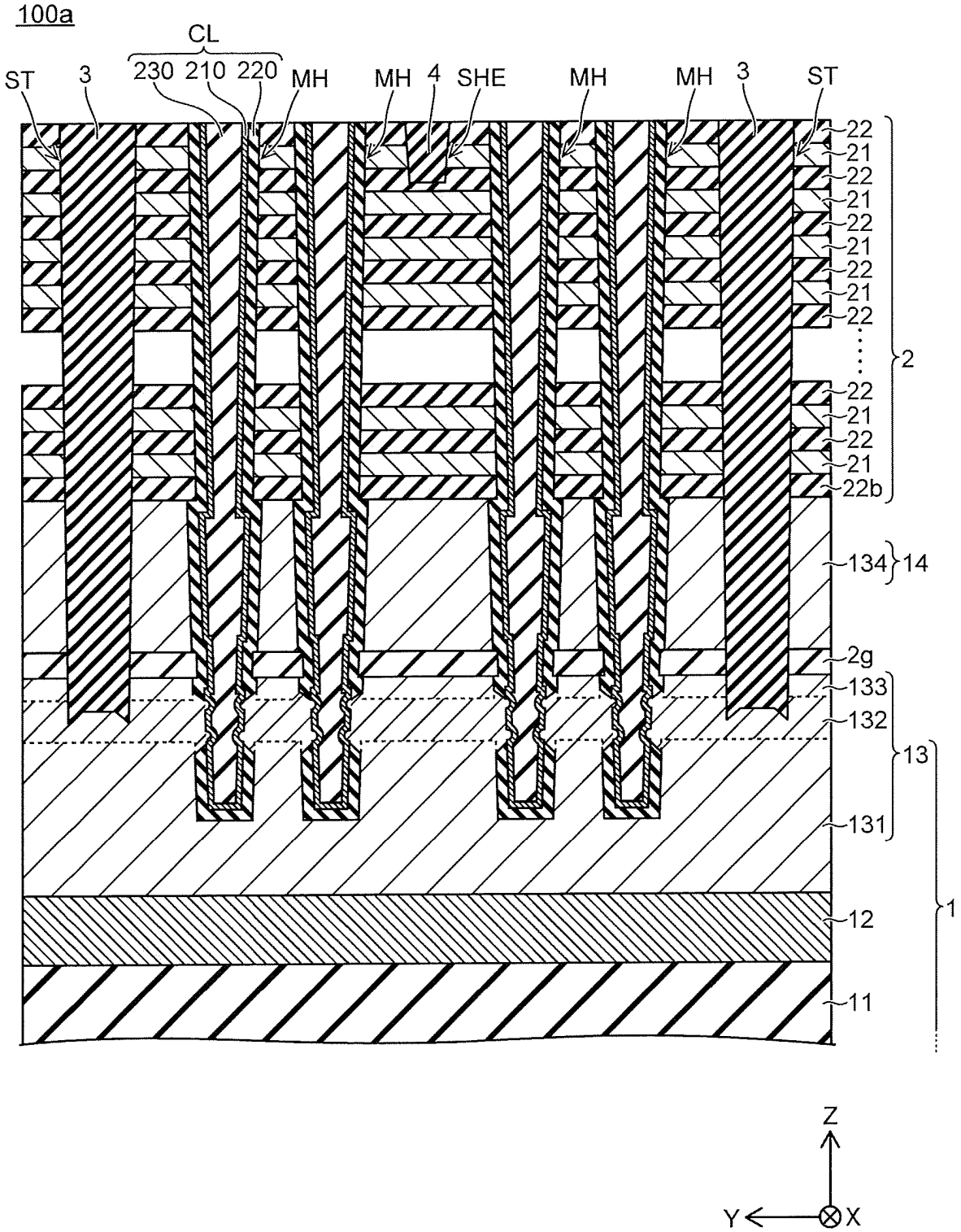
100a
CL
230 210 220
ST
3
MH
MH
4
SHE
MH
MH
3
ST
22
21
22
21
22
21
22
21
22
2
22
21
22
21
22b
134
14
2g
133
132
13
131
12
1
11
Z
Y
X

FIG. 5

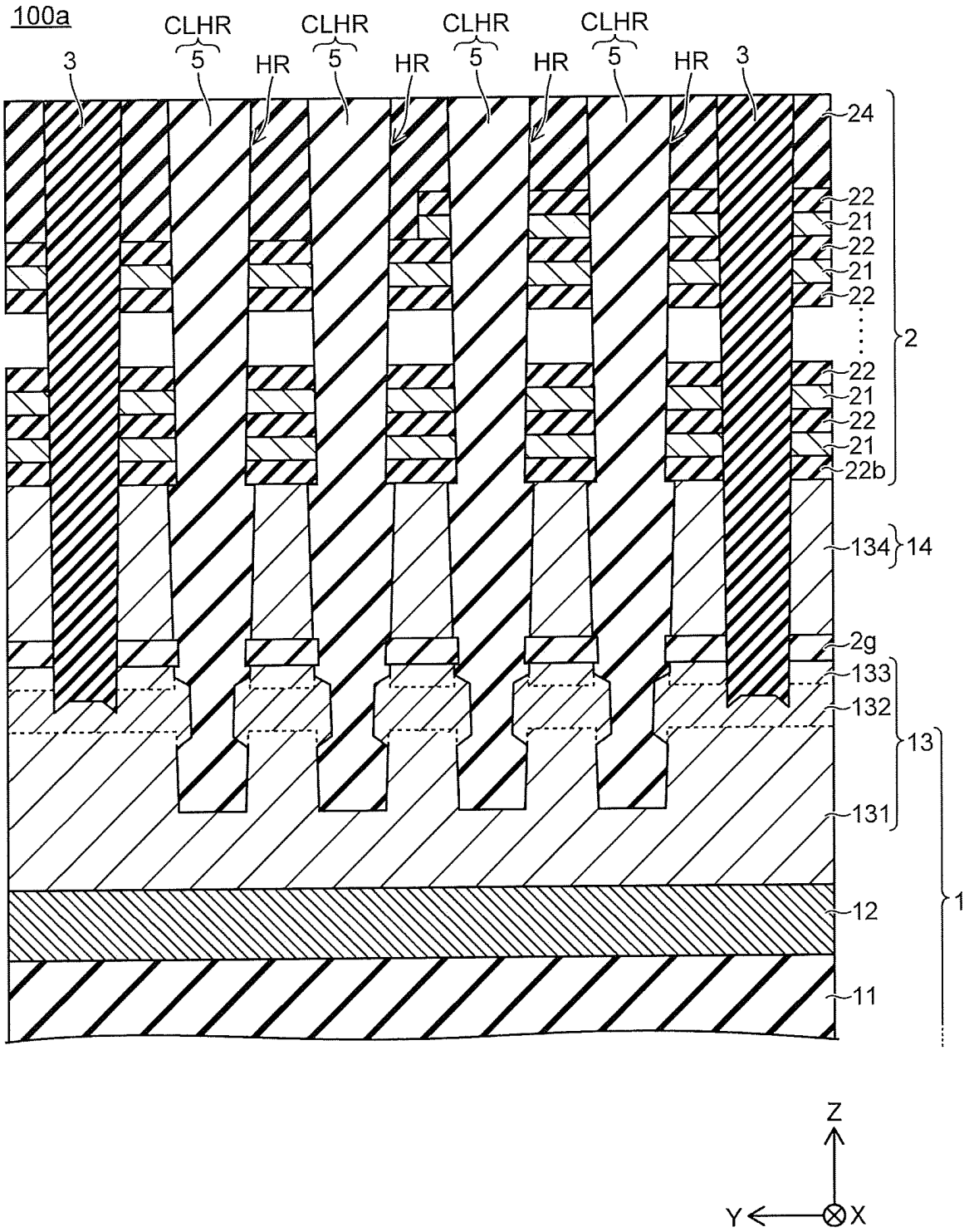

FIG. 6

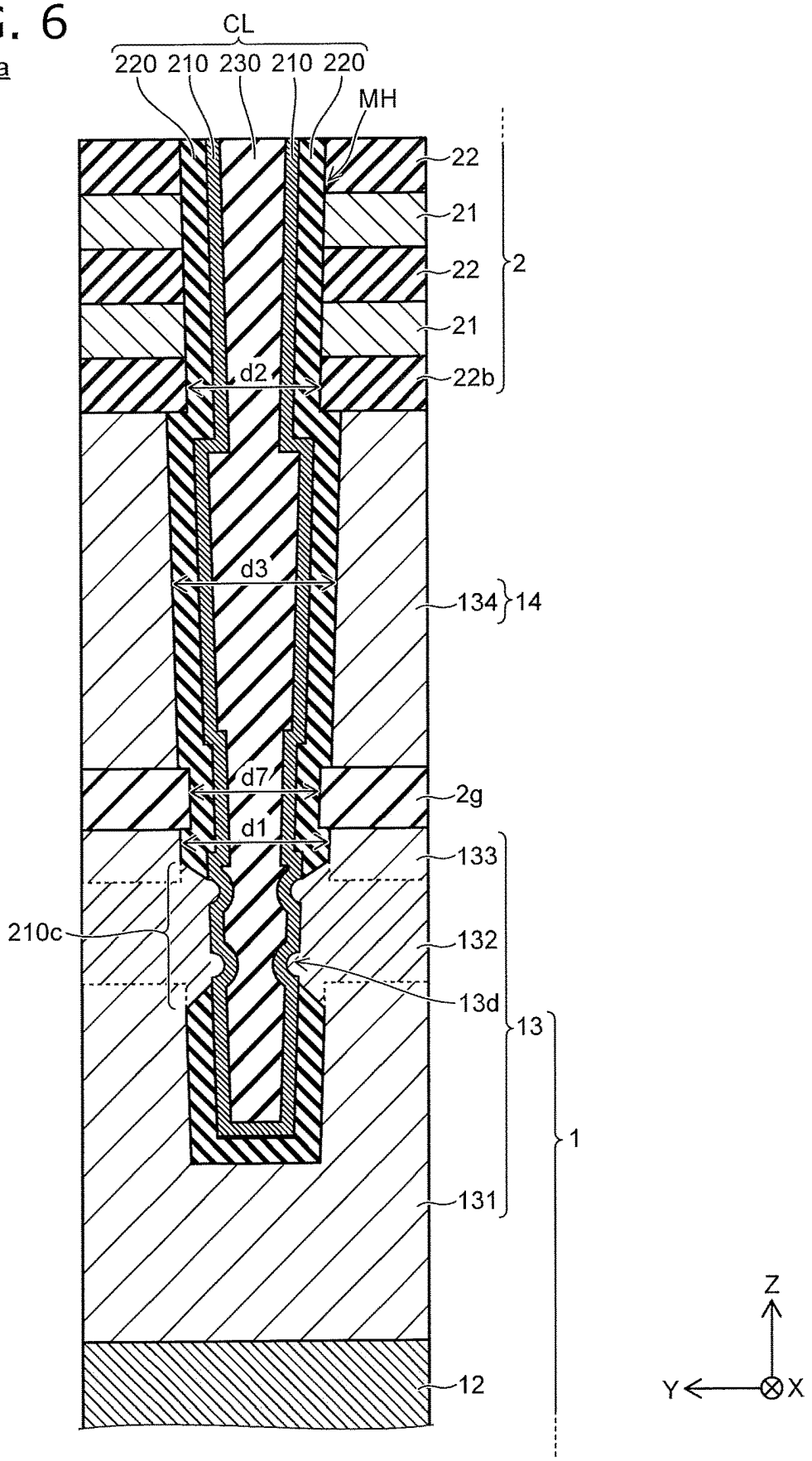
100a
CL
220 210 230 210 220
MH
22
21
22
21
22b
2
d2
d3
134
14
d7
2g
d1
133
210c
132
13d
13
1
131
12
Z
Y
X

FIG. 7

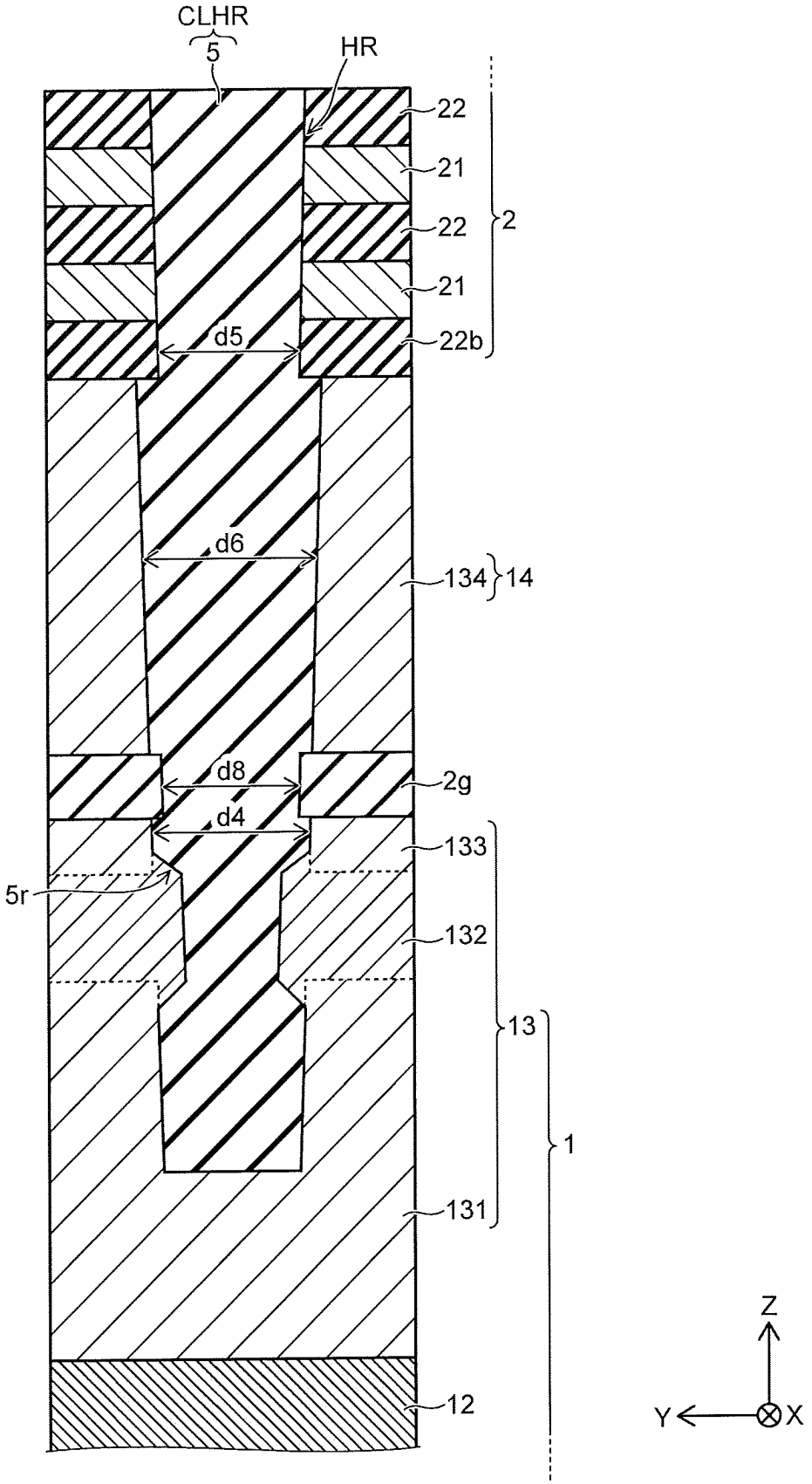
100a
CLHR
5
HR
22
21
22
21
22b
2
d5
d6
134
14
d8
2g
d4
133
5r
132
13
1
131
12
Z
Y
X

FIG. 8

100aa

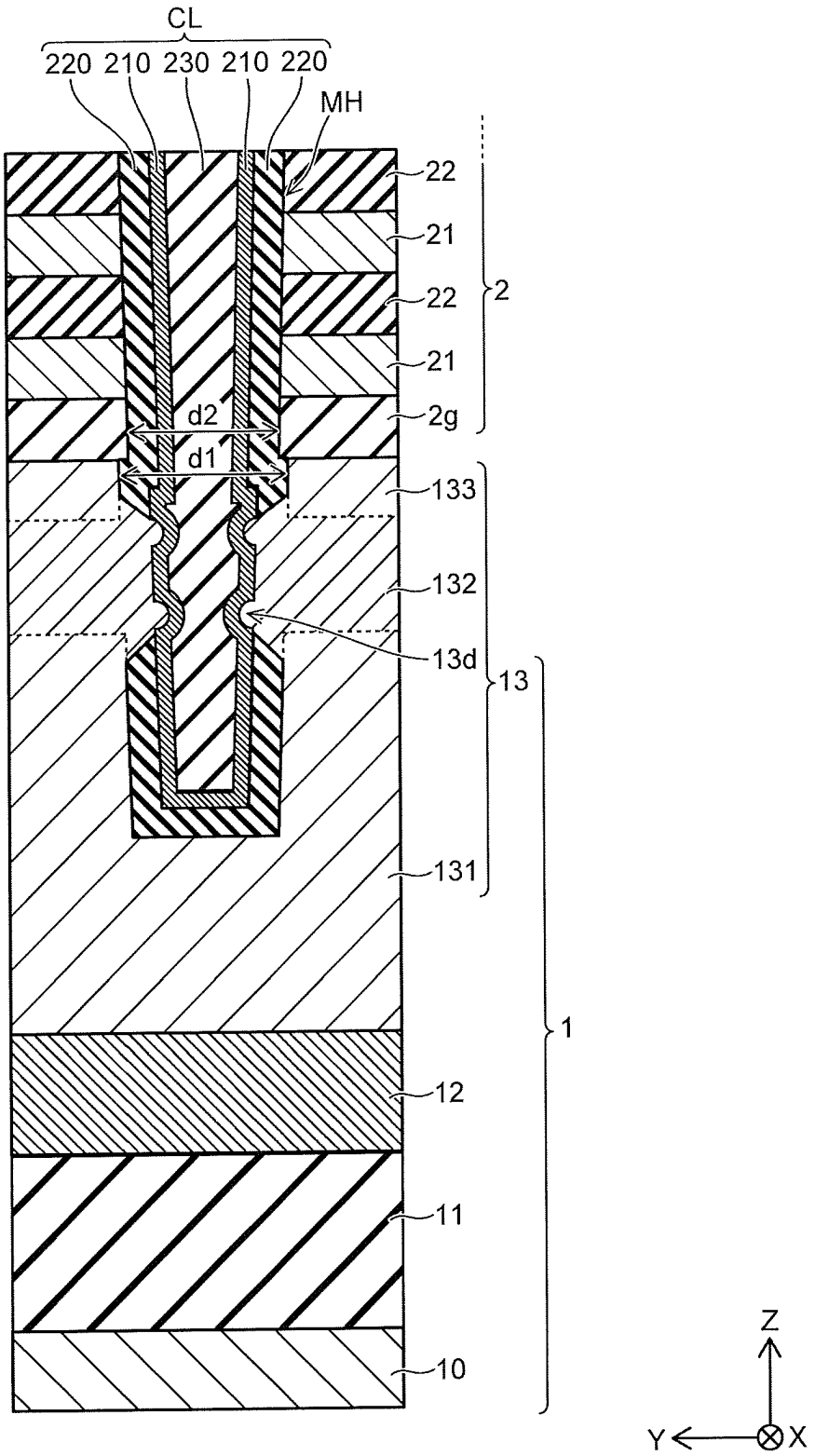
CL
220 210 230 210 220
MH
22
21
22
21
2g
2
d2
d1
133
132
13d
13
131
1
12
11
10
Z
Y
X

FIG. 9

100aa

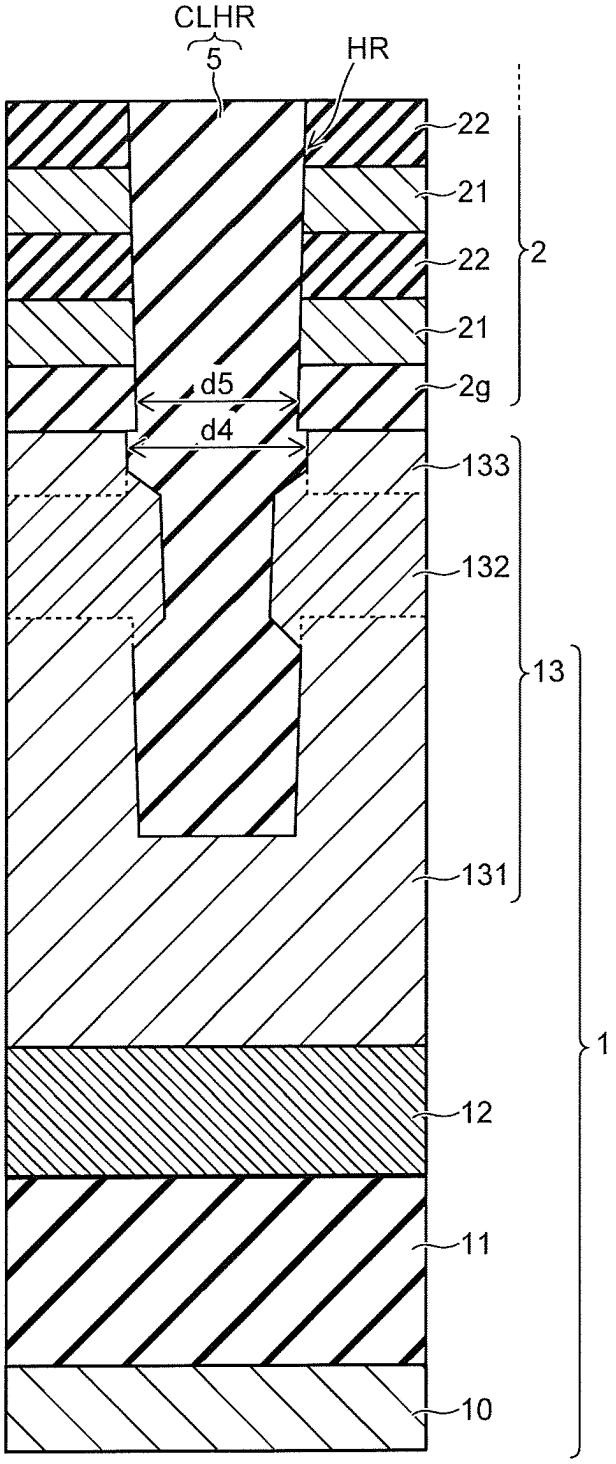

FIG. 10

100a

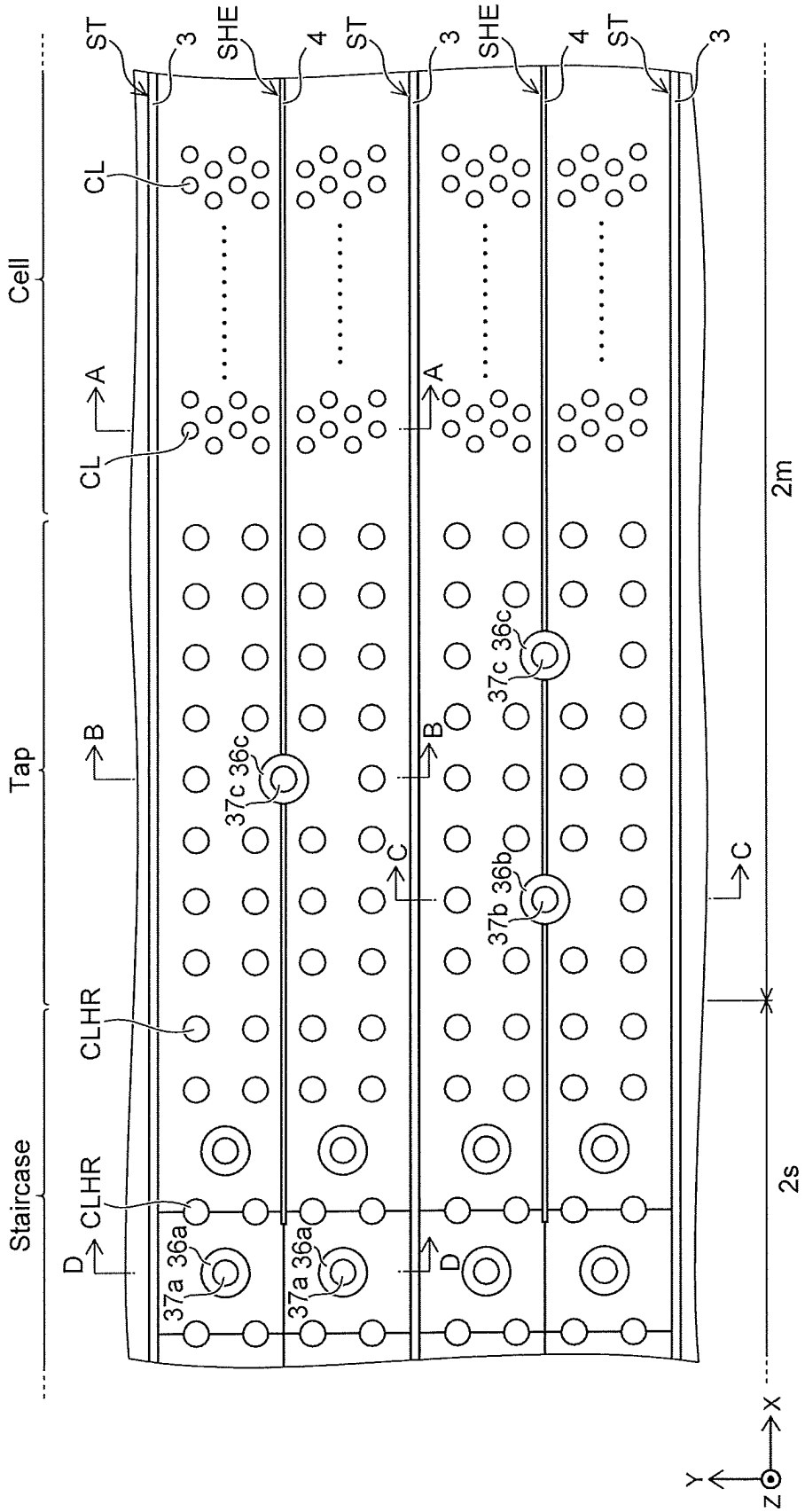
Staircase
Tap
Cell
ST
3
SHE
4
CL
A
B
C
D
CLHR
37a 36a
37b 36b
37c 36c
2s
2m
X
Y
Z

FIG. 11A

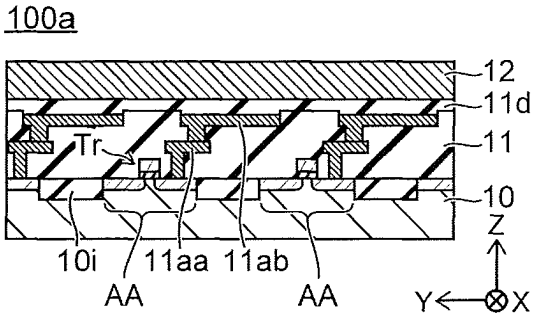

FIG. 11B

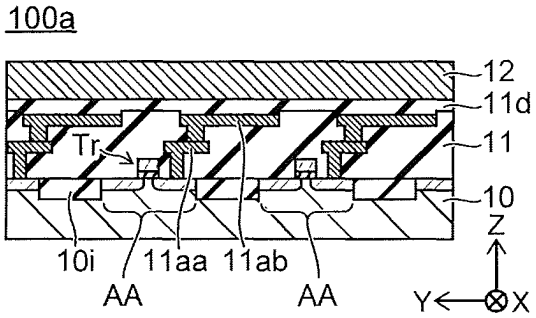

FIG. 11C

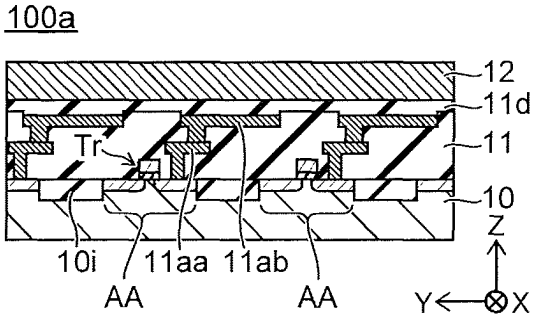

FIG. 11D

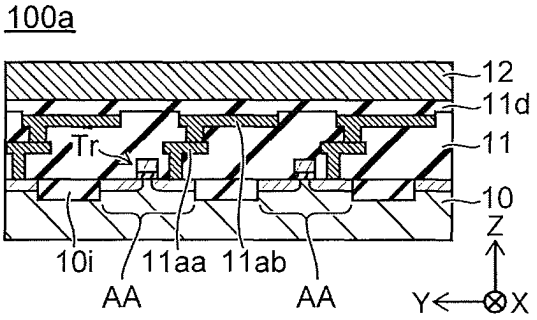

FIG. 12A

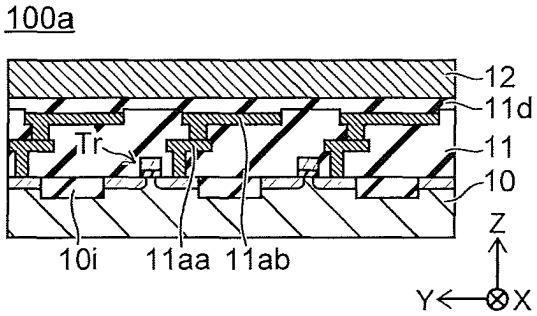

FIG. 12B

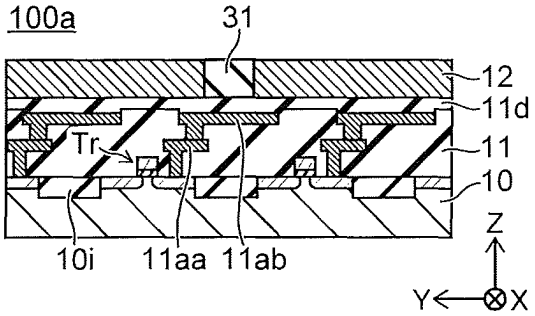

FIG. 12C

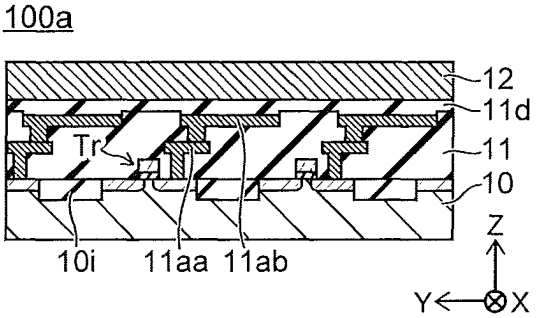

FIG. 12D

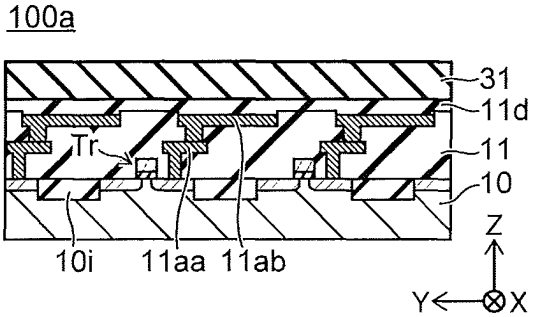

FIG. 13A

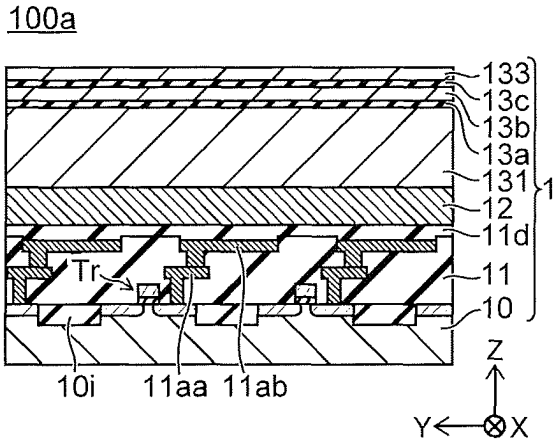

FIG. 13B

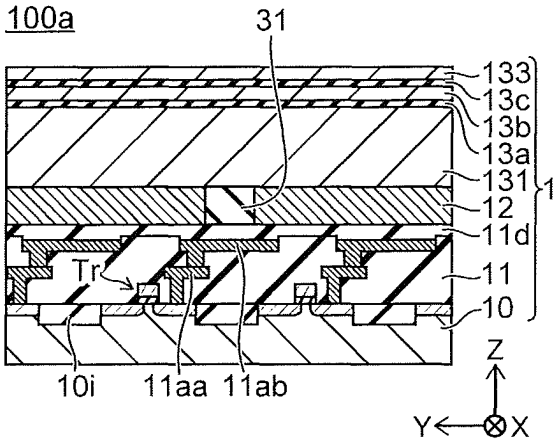

FIG. 13C

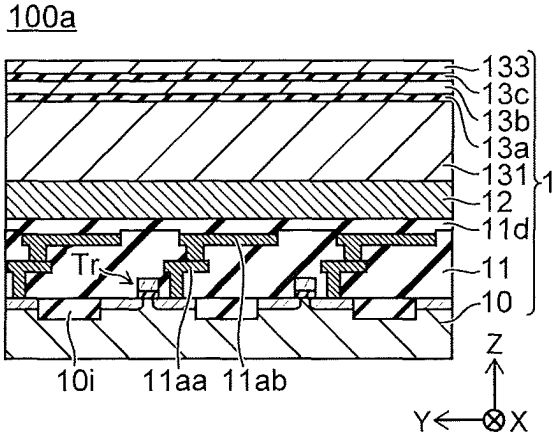

FIG. 13D

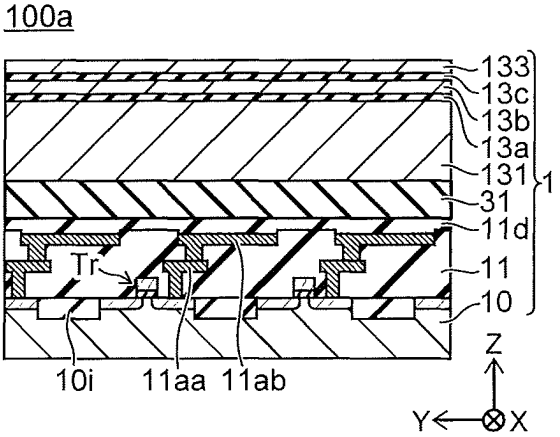

FIG. 14A

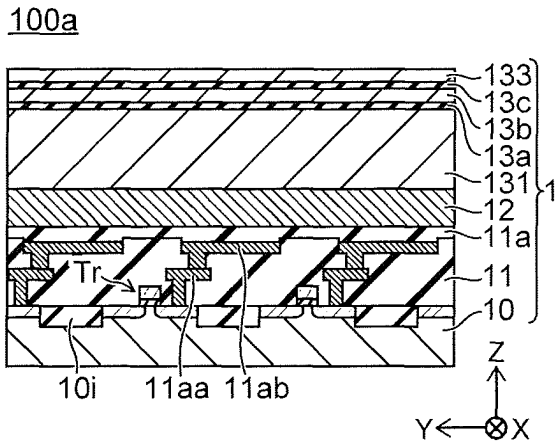

FIG. 14B

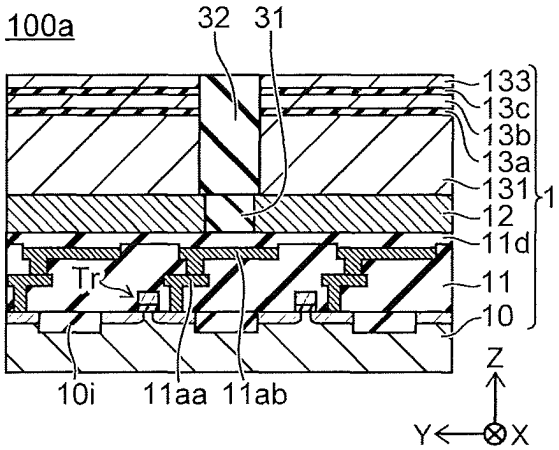

FIG. 14C

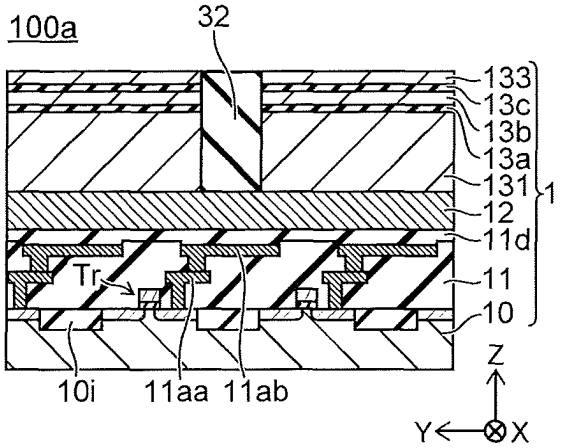

FIG. 14D

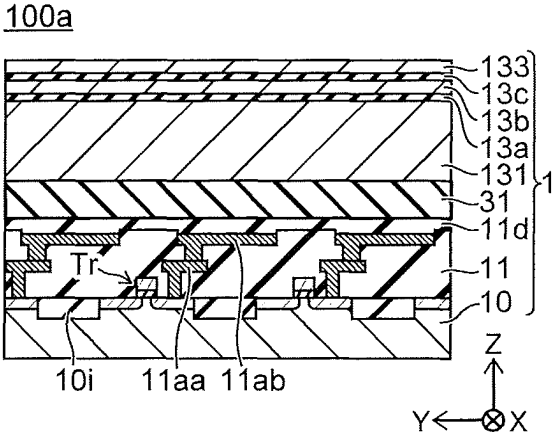

FIG. 15A

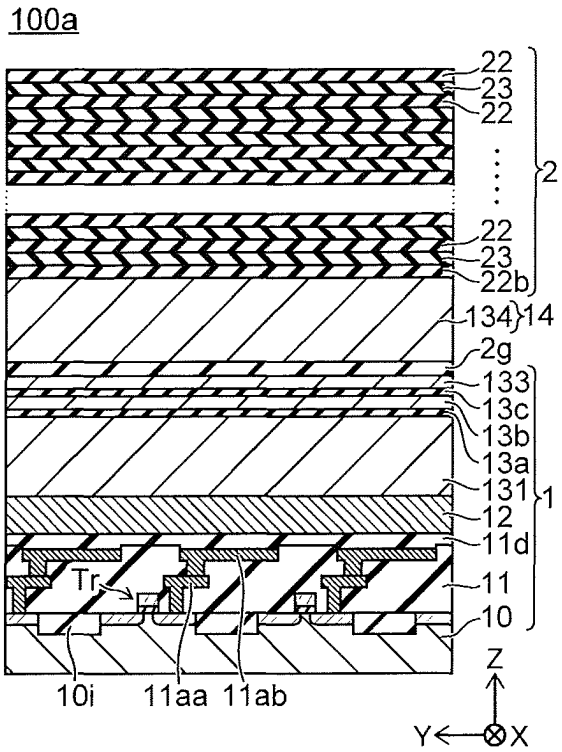

FIG. 15B

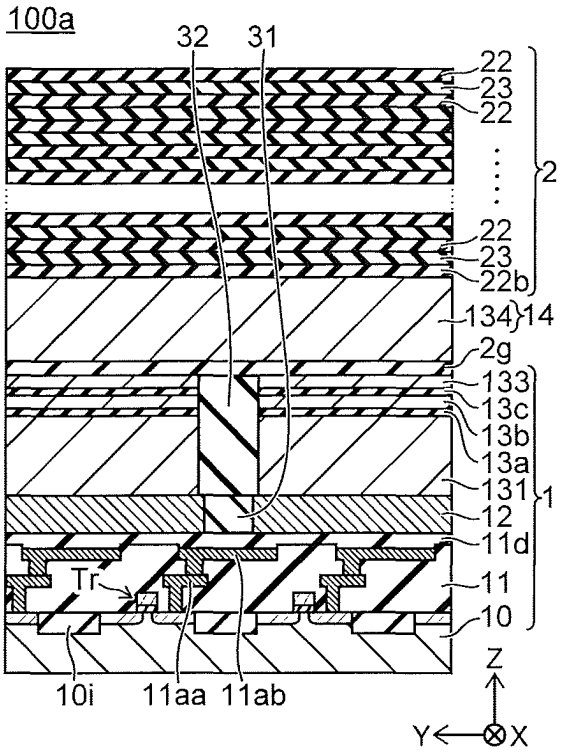

FIG. 15C

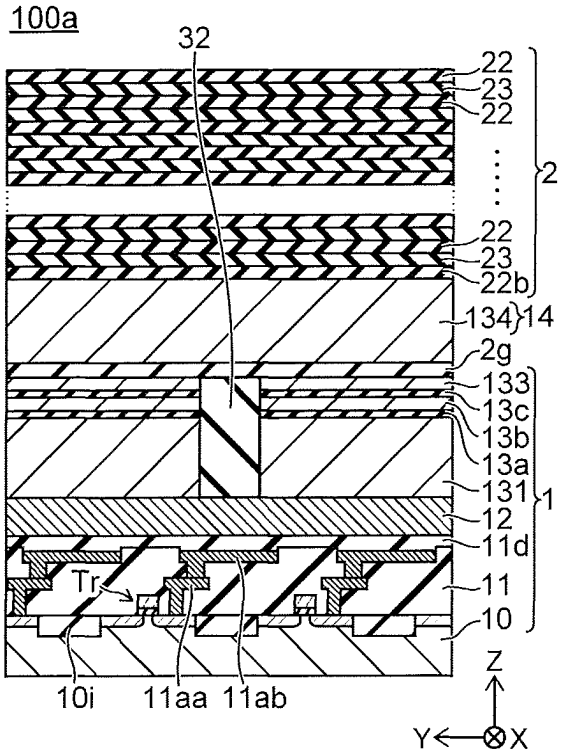

FIG. 15D

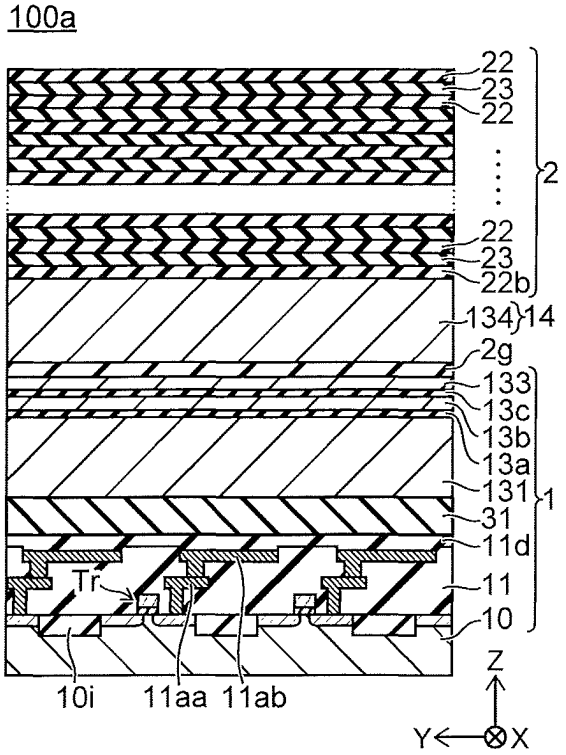

FIG. 16A

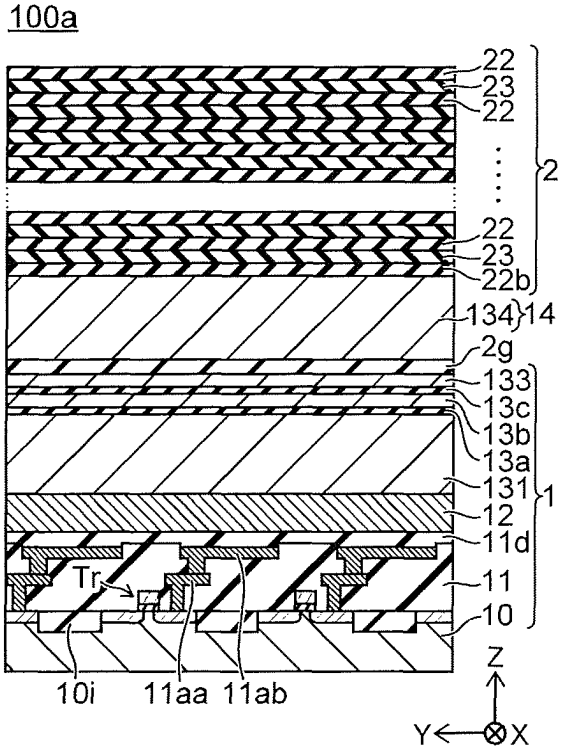

FIG. 16B

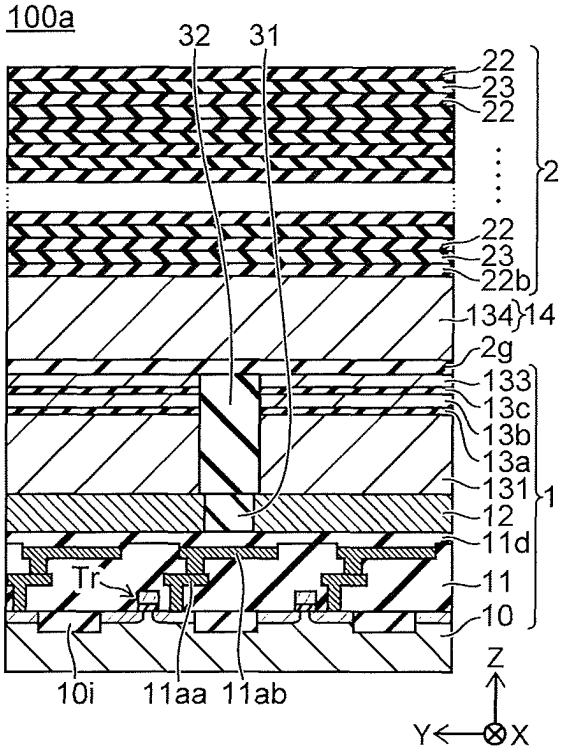

FIG. 16C

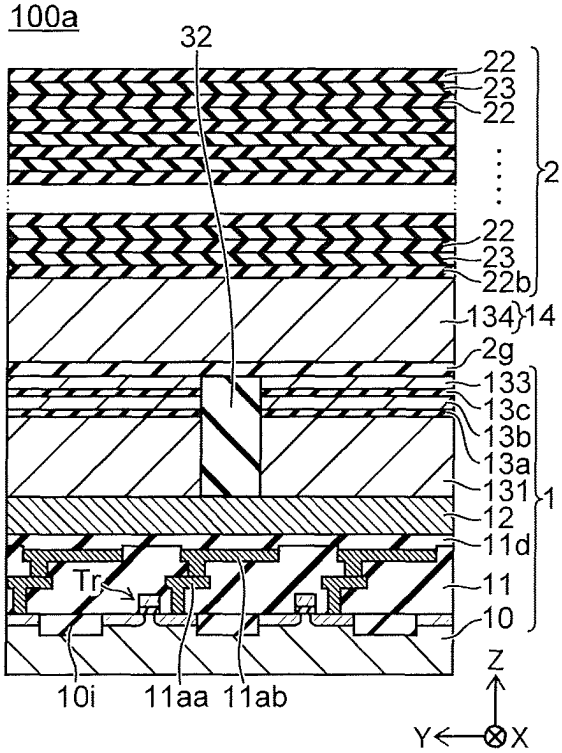

FIG. 16D

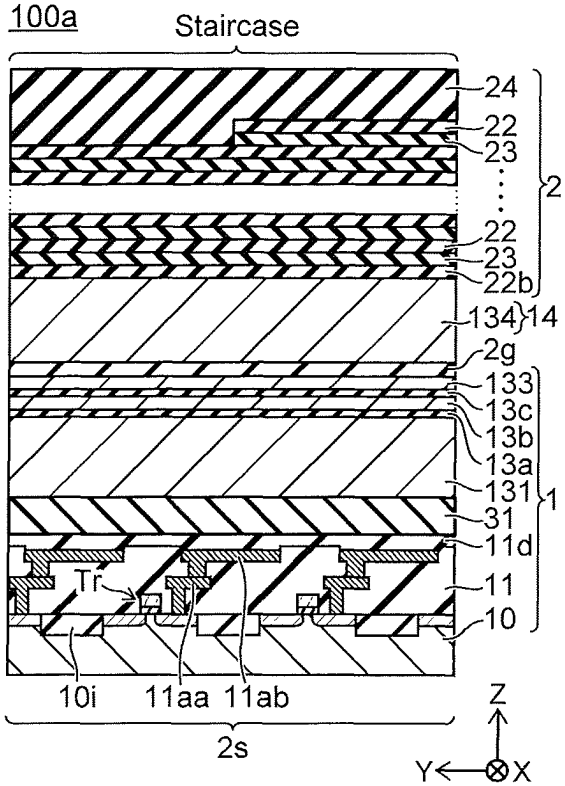

FIG. 17A

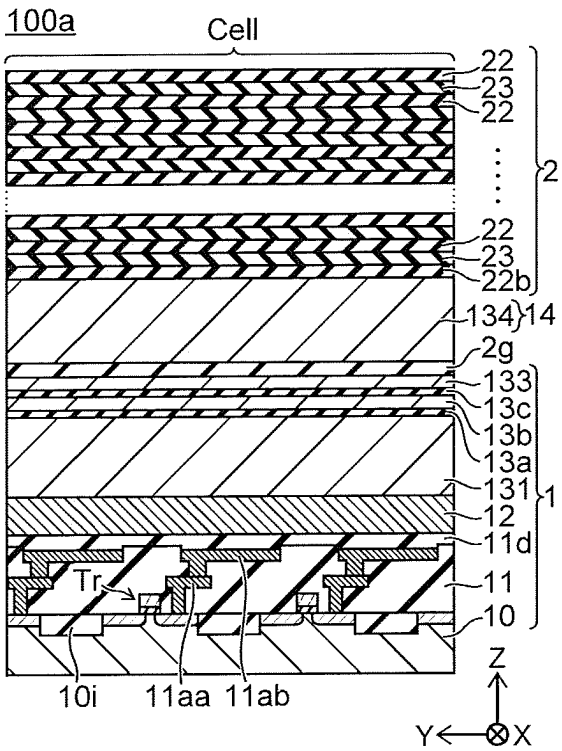

FIG. 17B

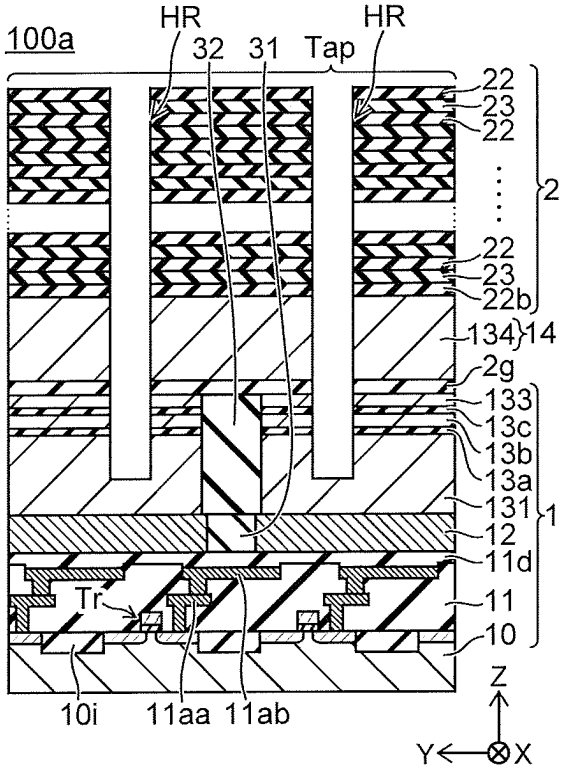

FIG. 17C

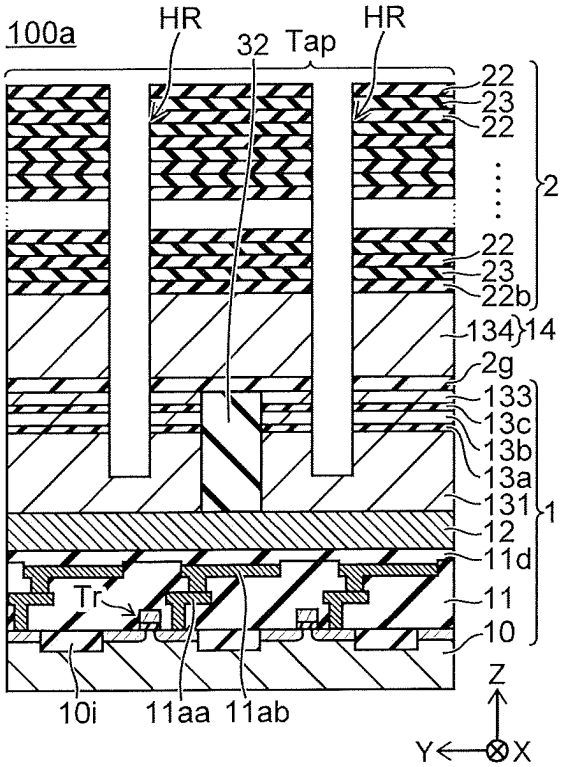

FIG. 17D

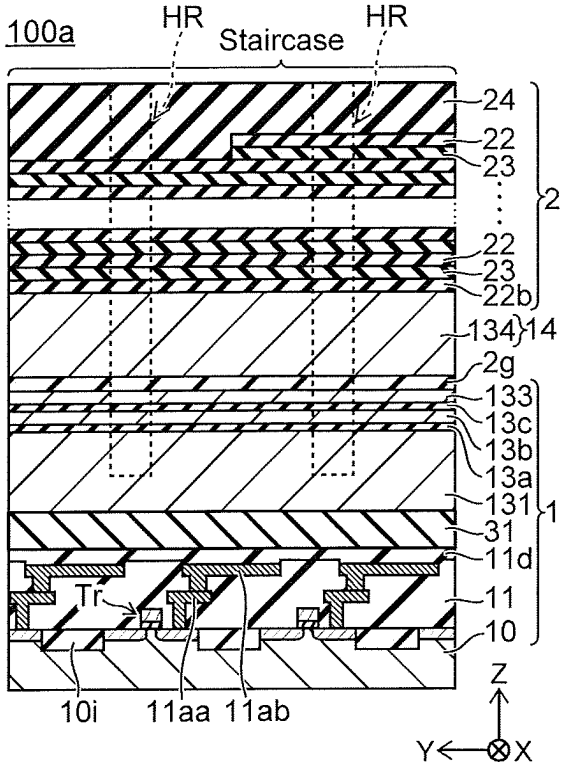

FIG. 18A

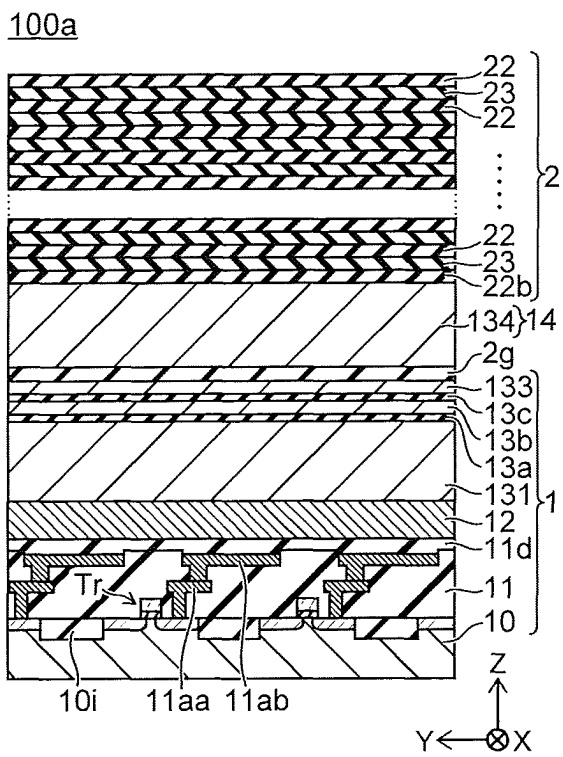

FIG. 18B

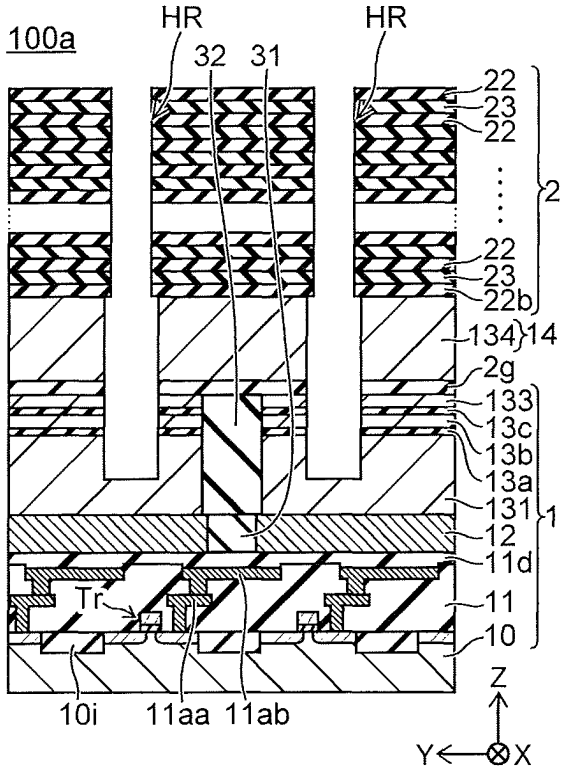

FIG. 18C

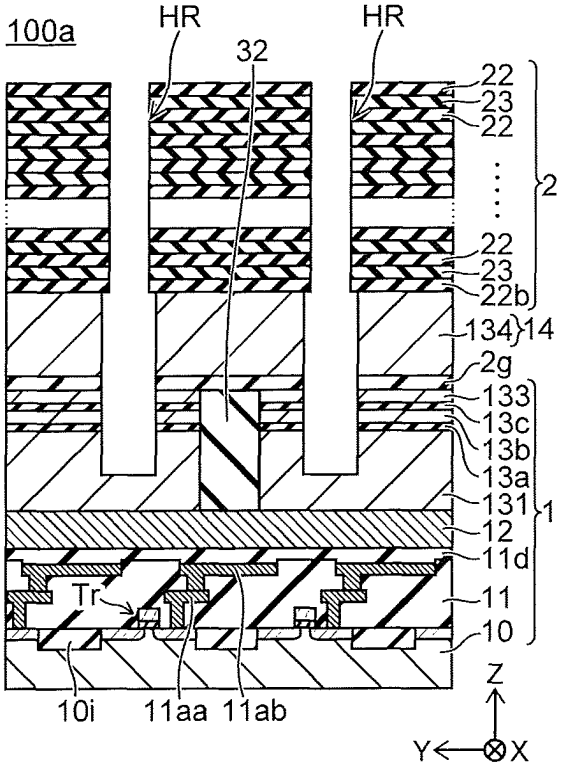

FIG. 18D

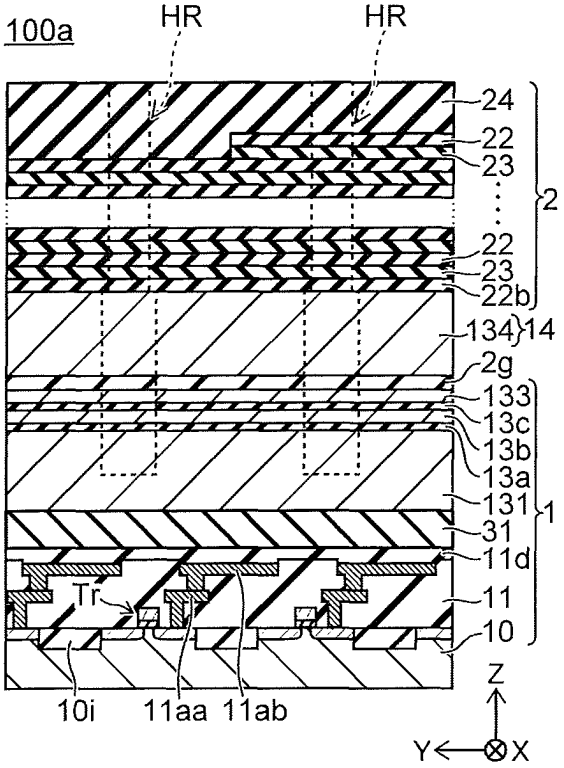

FIG. 19A

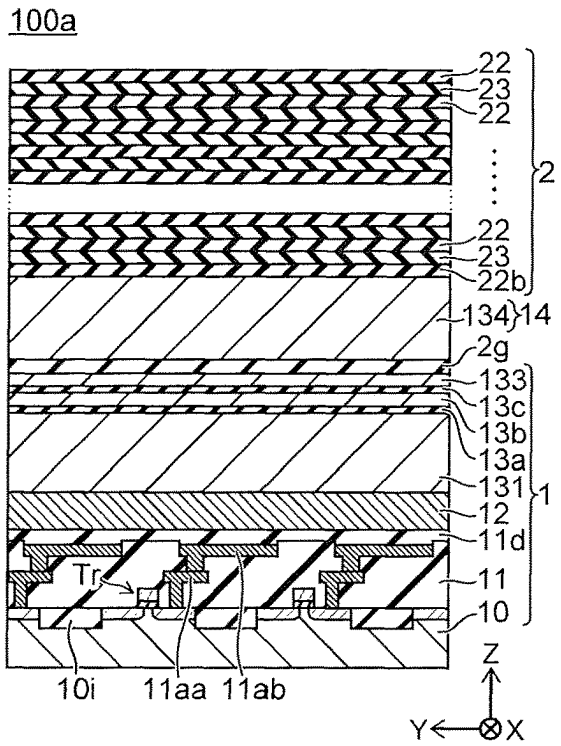

FIG. 19B

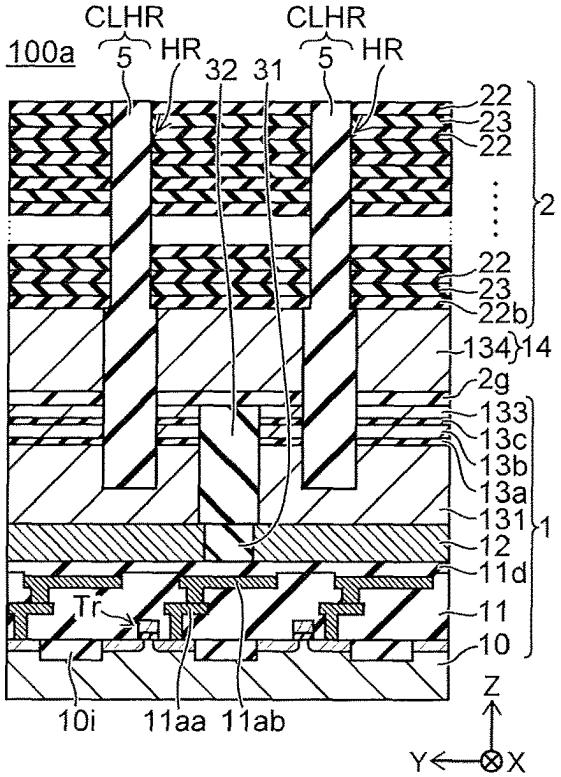

FIG. 19C

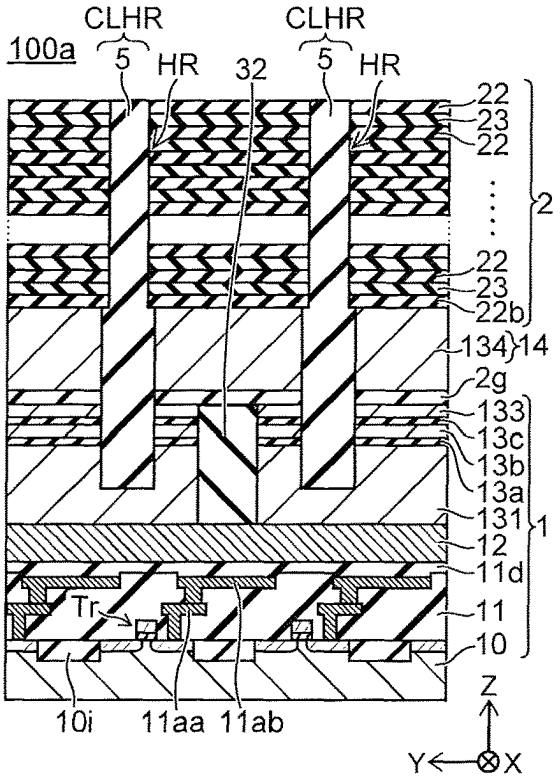

FIG. 19D

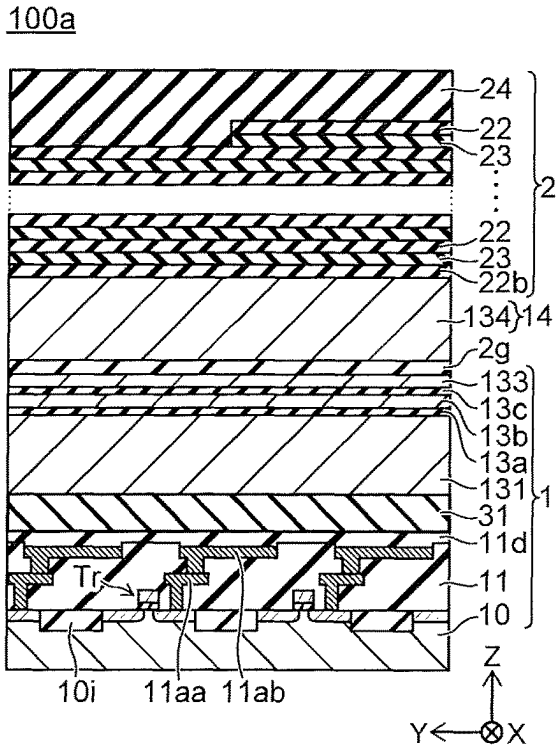

FIG. 20A

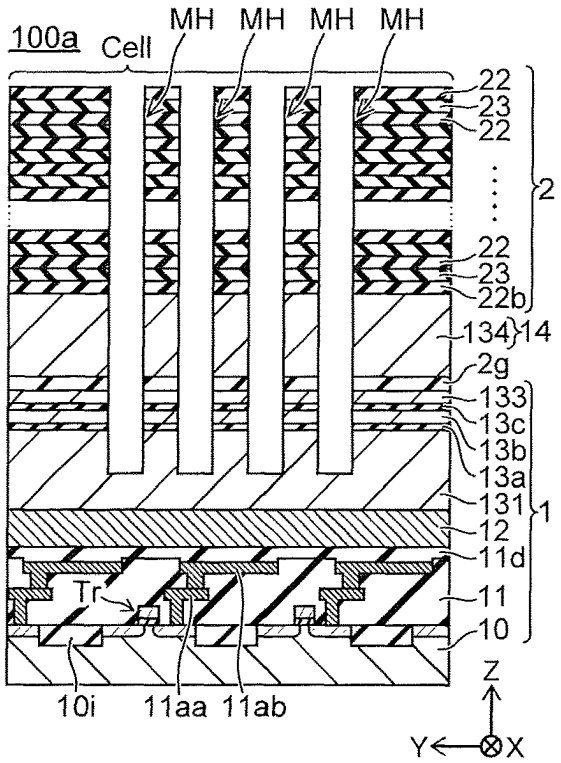

FIG. 20B

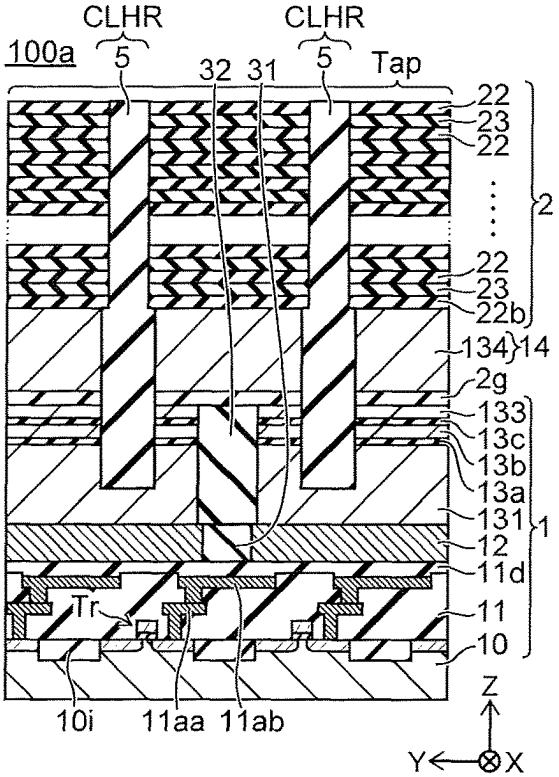

FIG. 20C

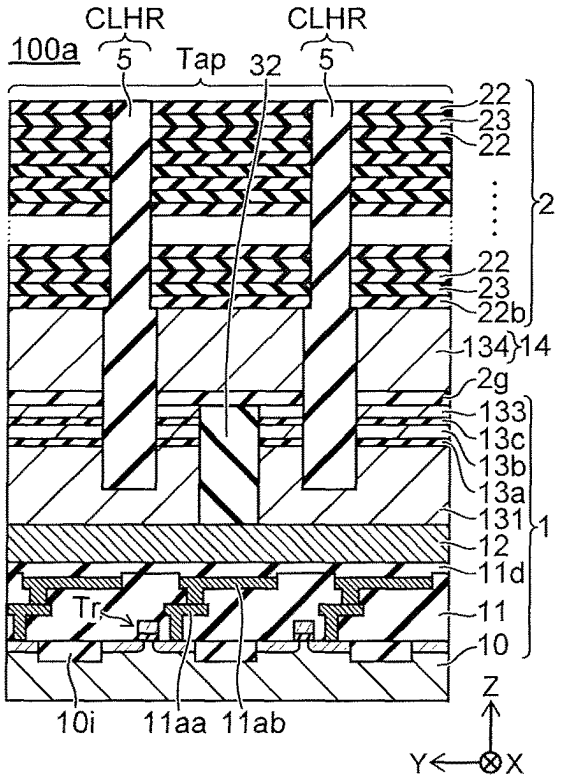

FIG. 20D

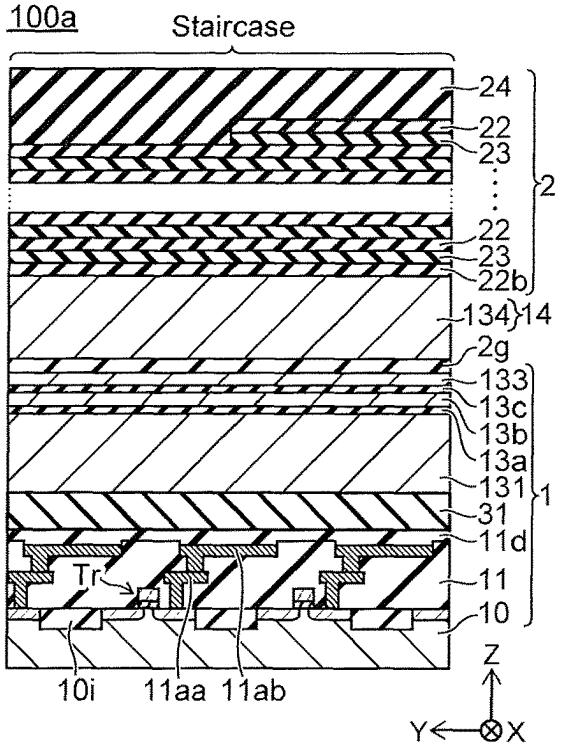

FIG. 21A

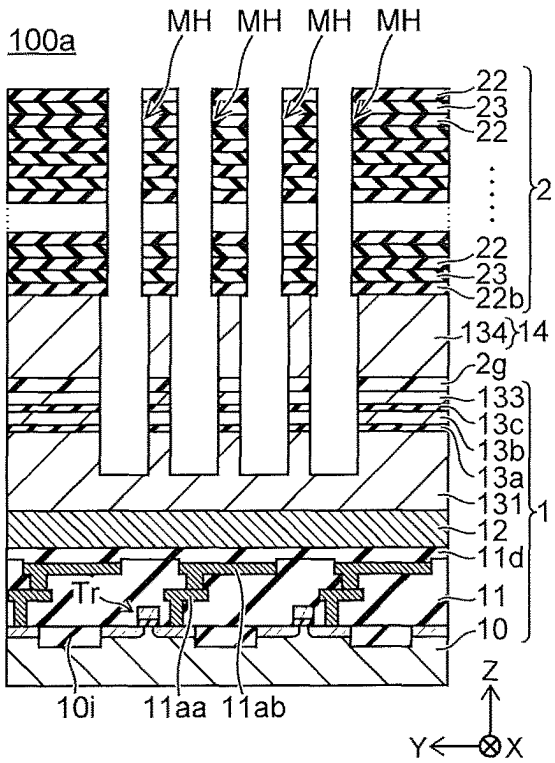

FIG. 21B

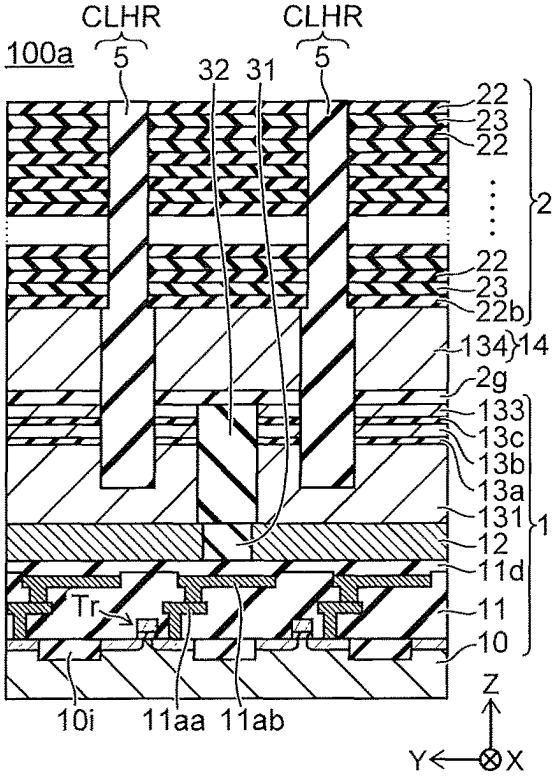

FIG. 21C

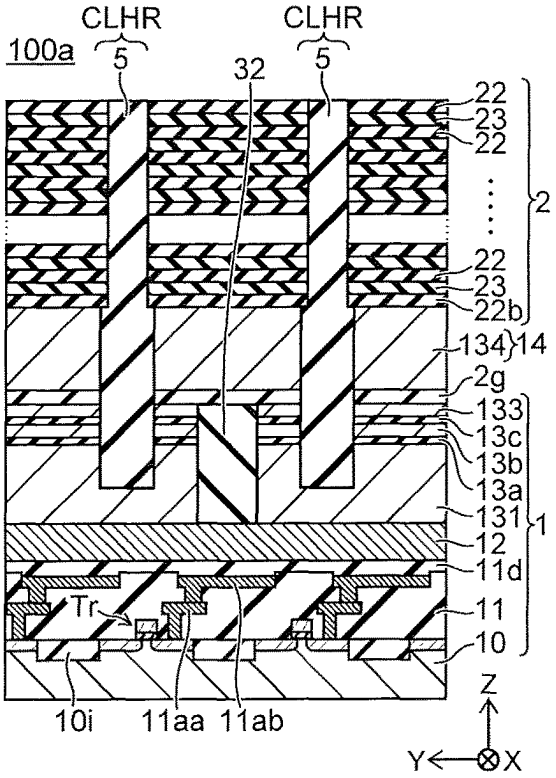

FIG. 21D

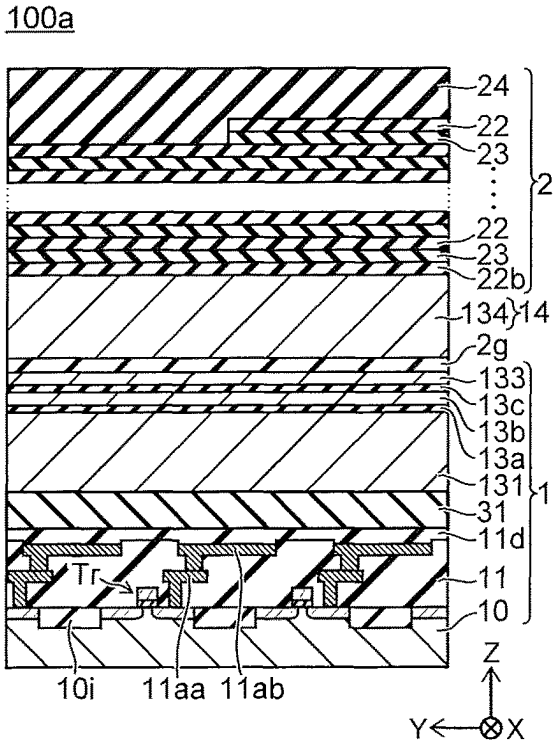

FIG. 22A

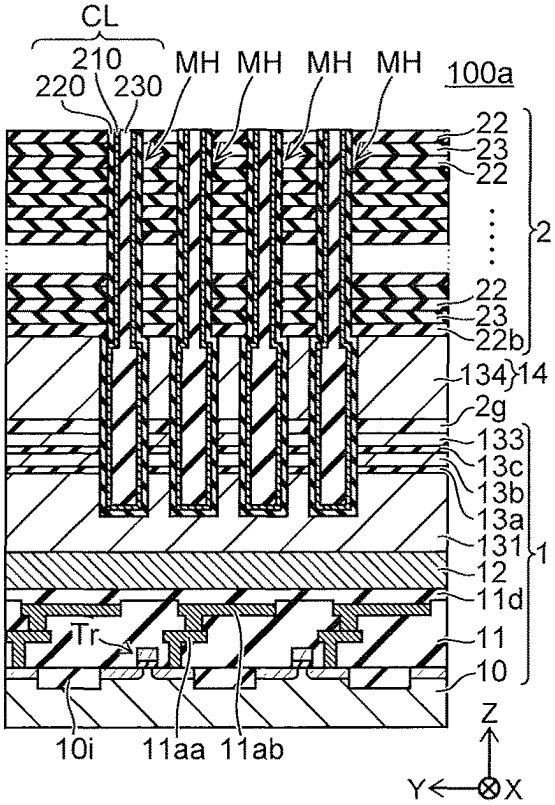

FIG. 22B

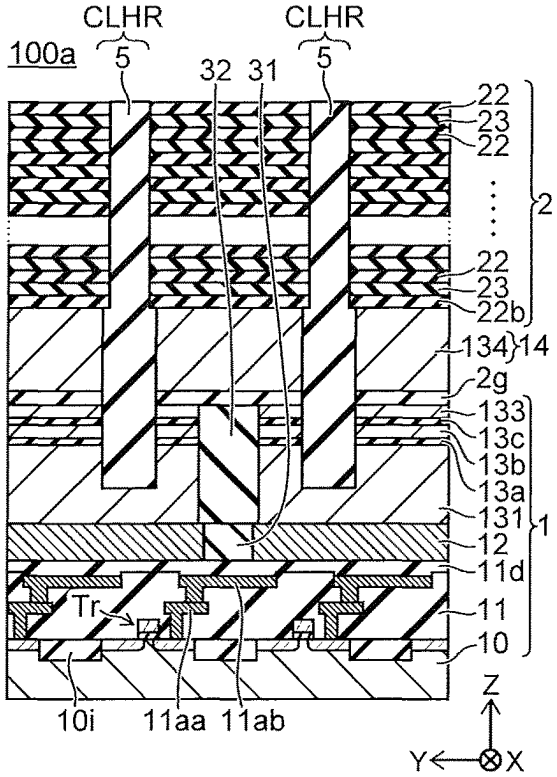

FIG. 22C

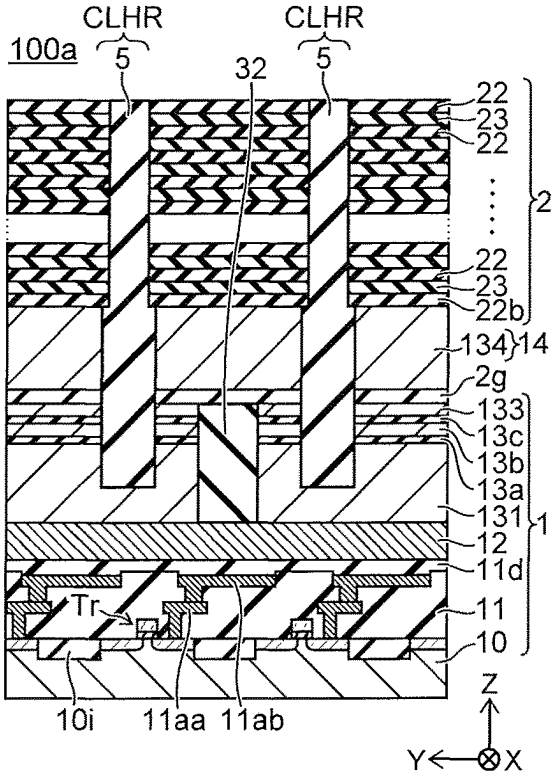

FIG. 22D

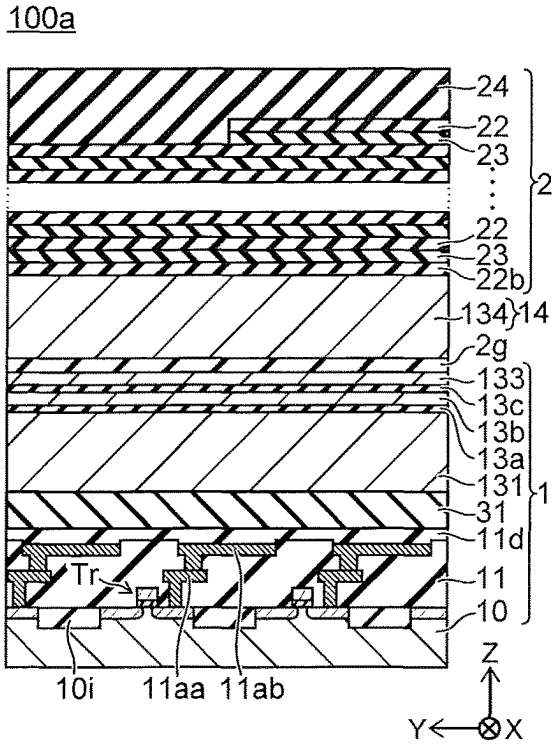

FIG. 23A

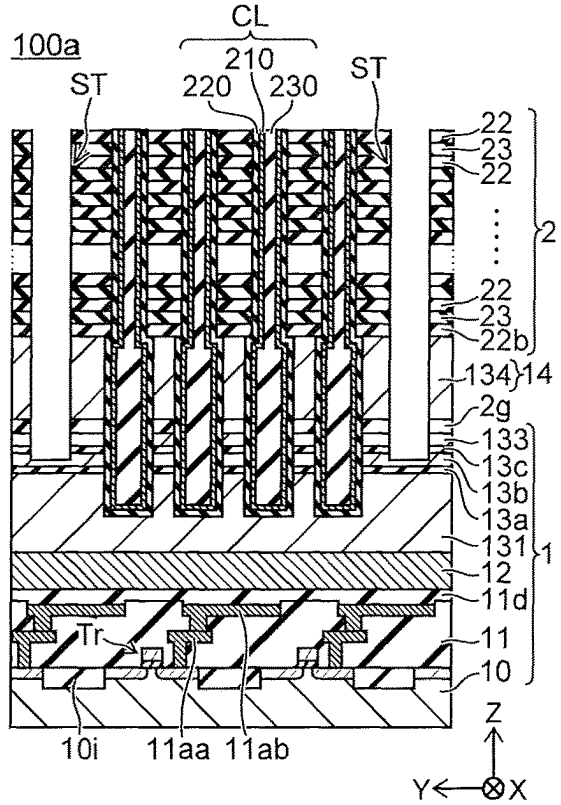

FIG. 23B

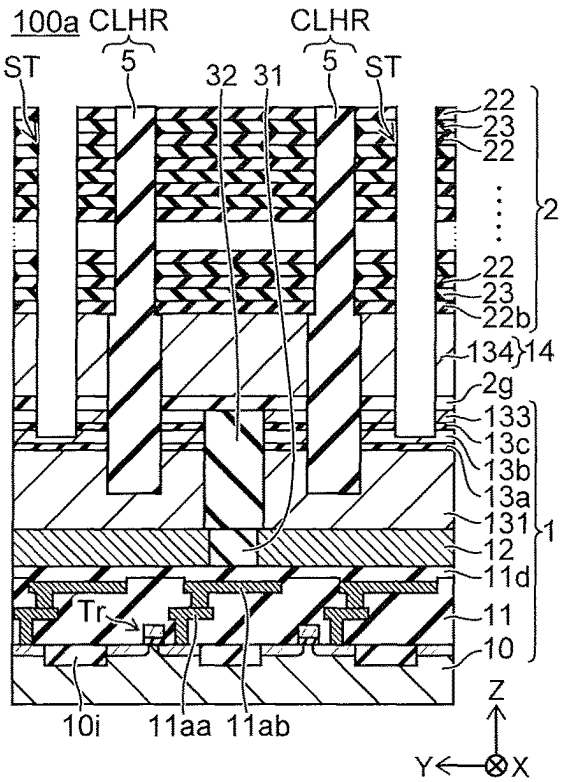

FIG. 23C

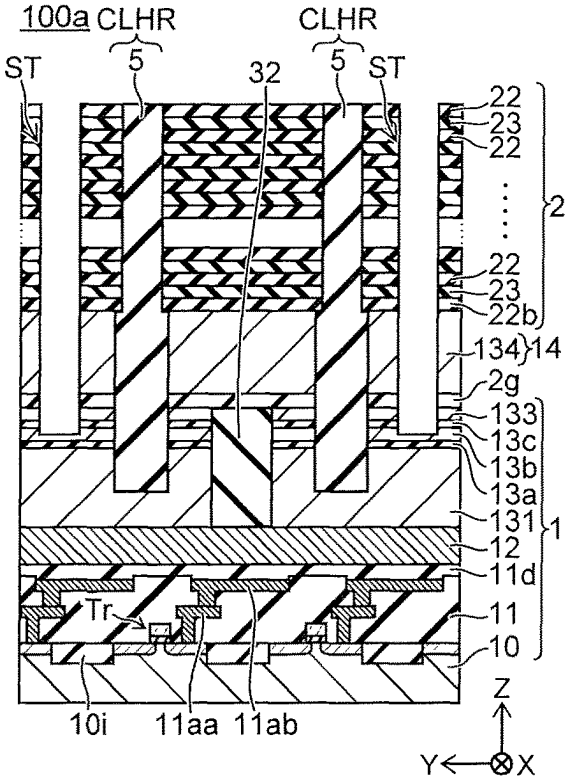

FIG. 23D

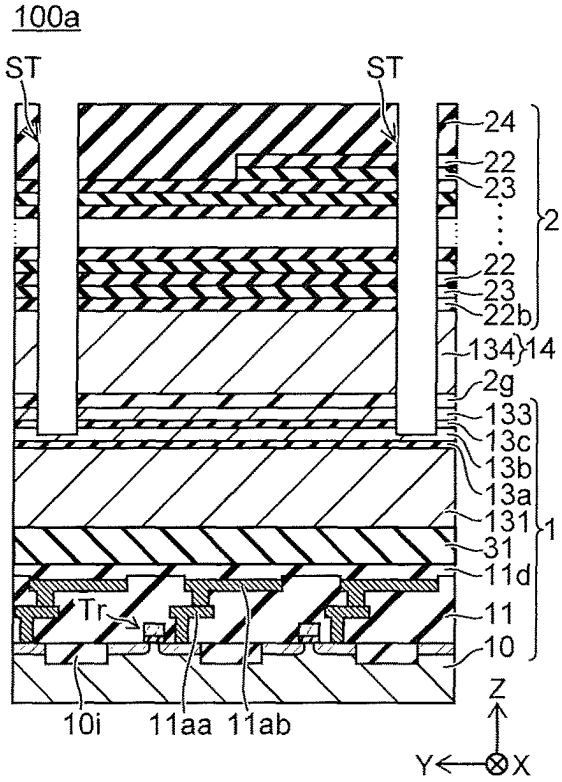

FIG. 24A

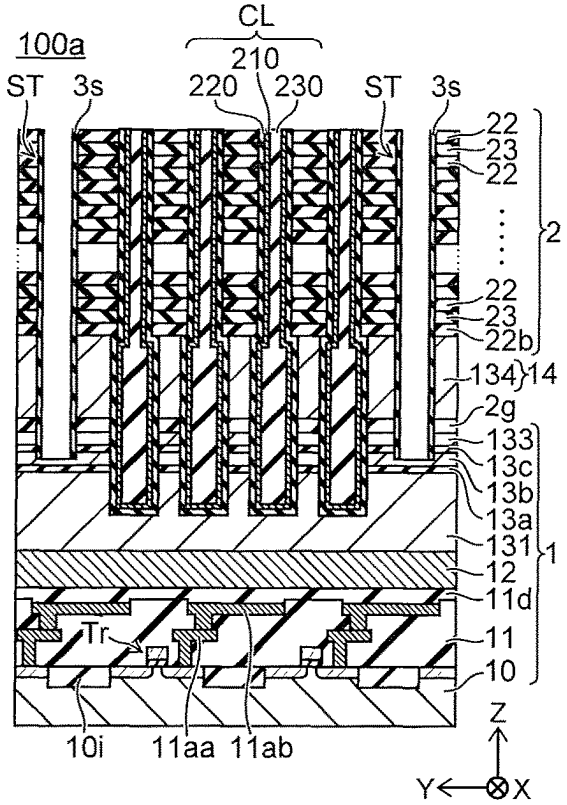

FIG. 24B

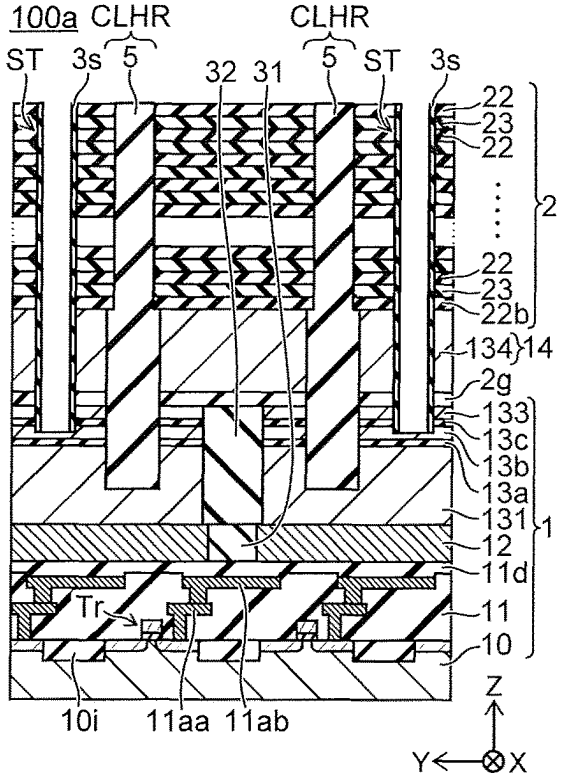

FIG. 24C

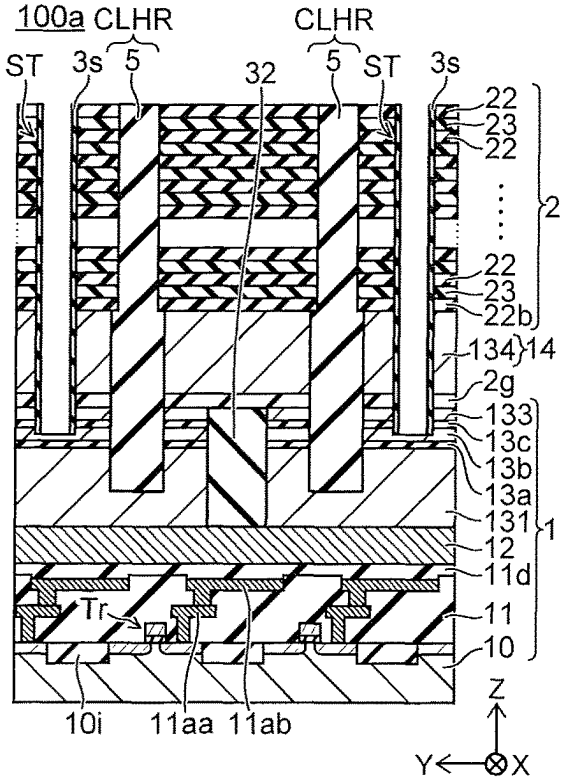

FIG. 24D

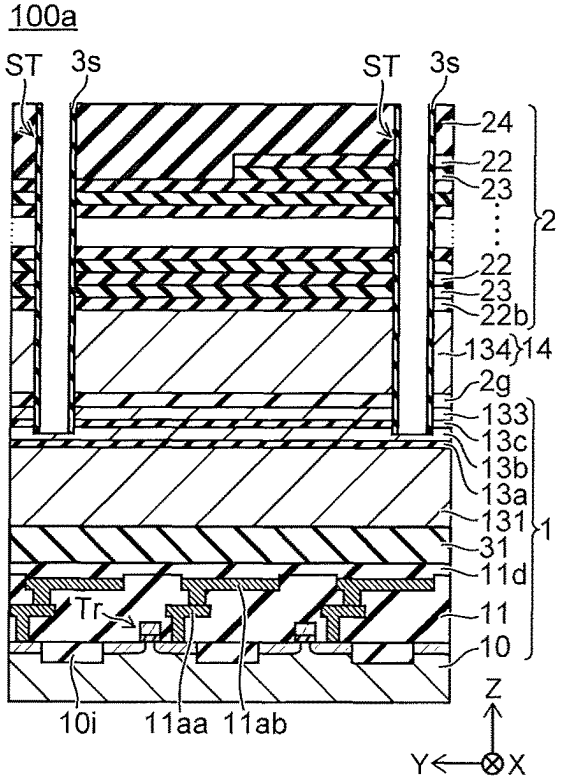

FIG. 25A

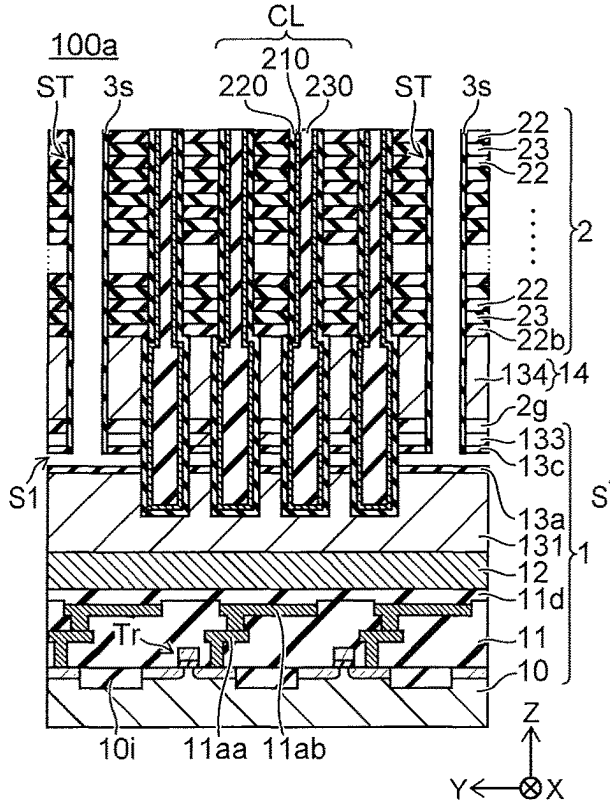

FIG. 25B

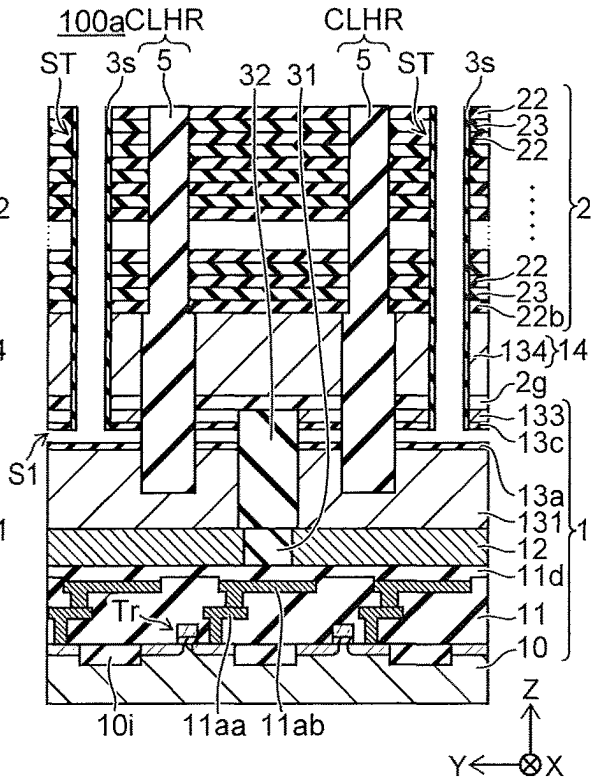

FIG. 25C

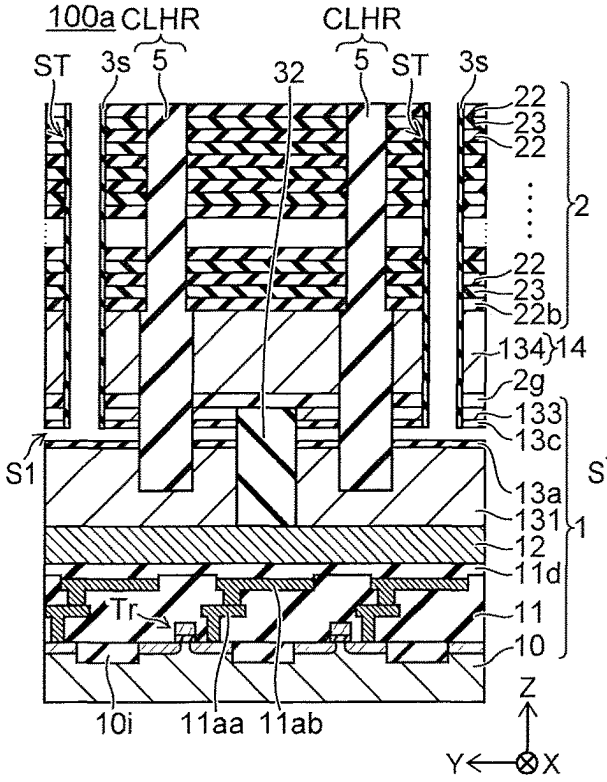

FIG. 25D

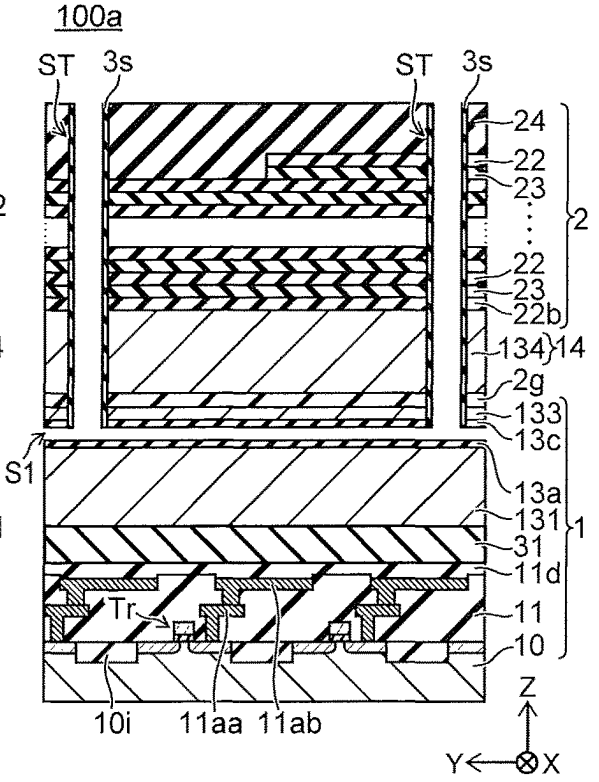

FIG. 26A

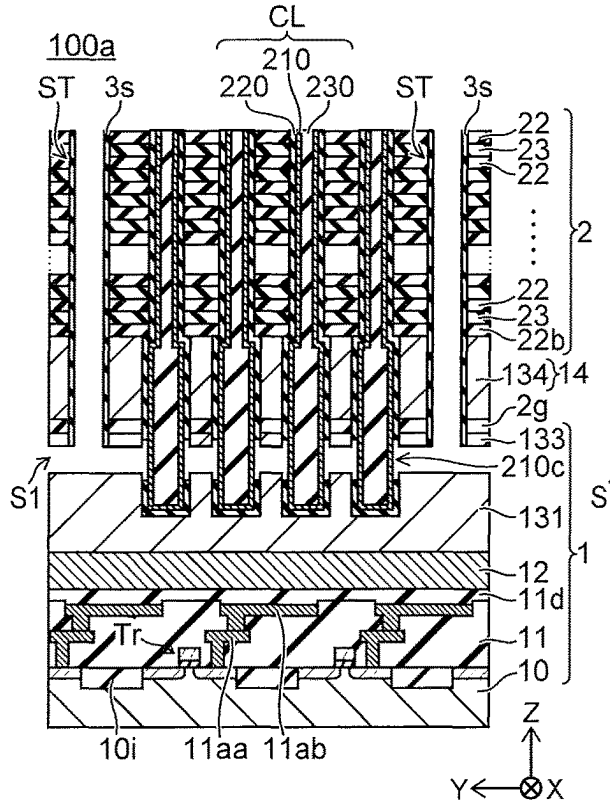

FIG. 26B

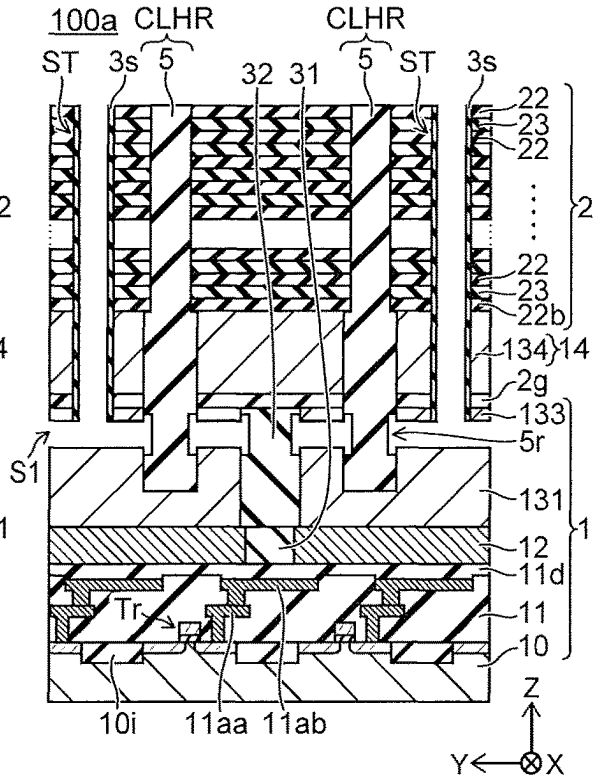

FIG. 26C

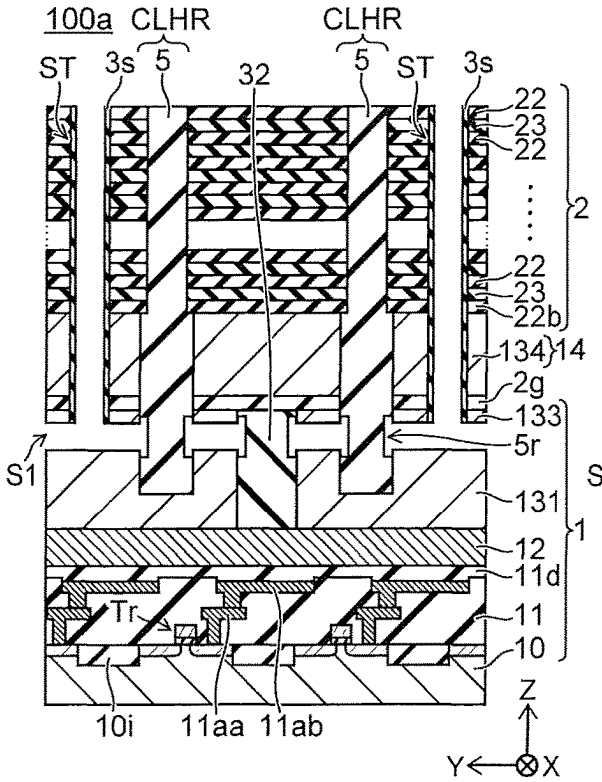

FIG. 26D

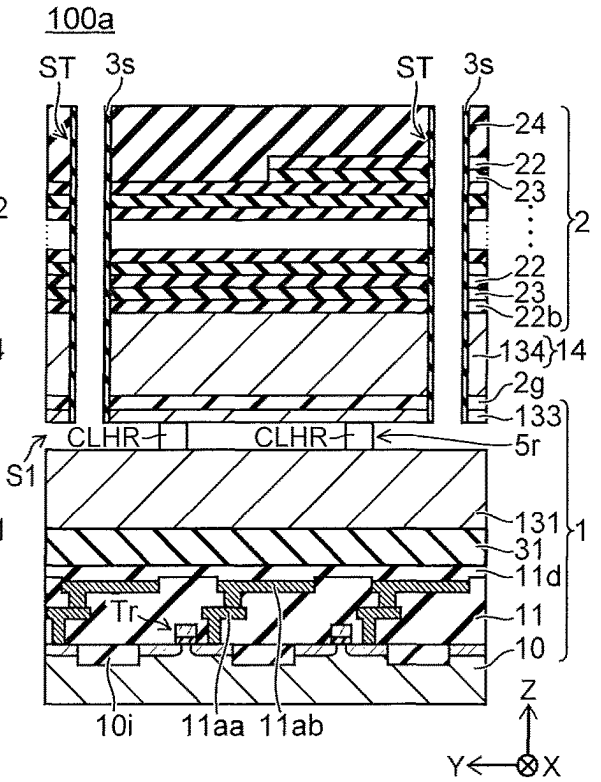

FIG. 27A

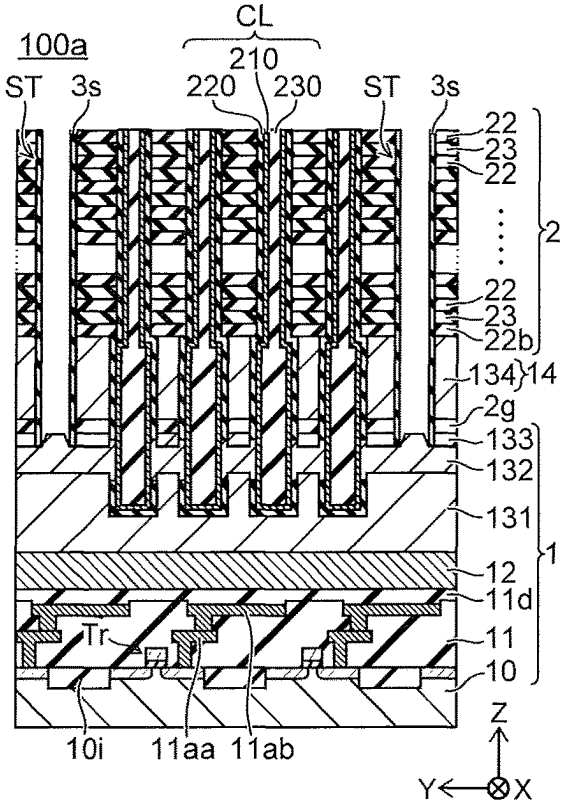

FIG. 27B

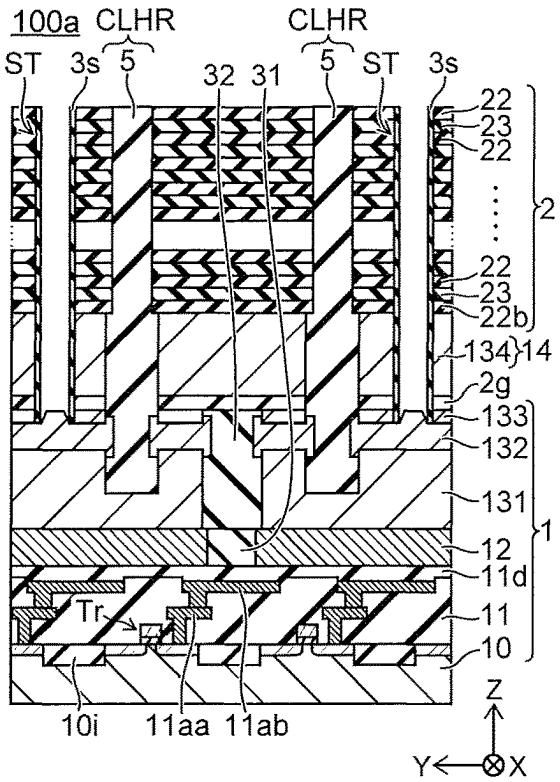

FIG. 27C

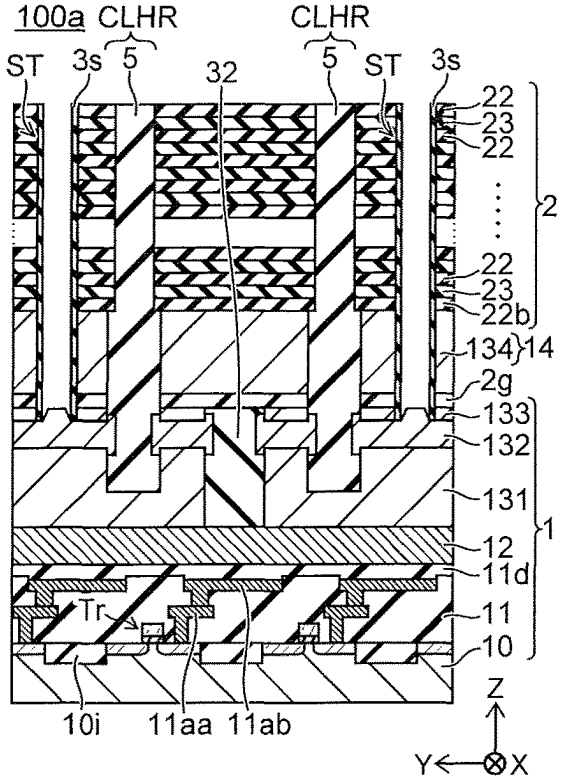

FIG. 27D

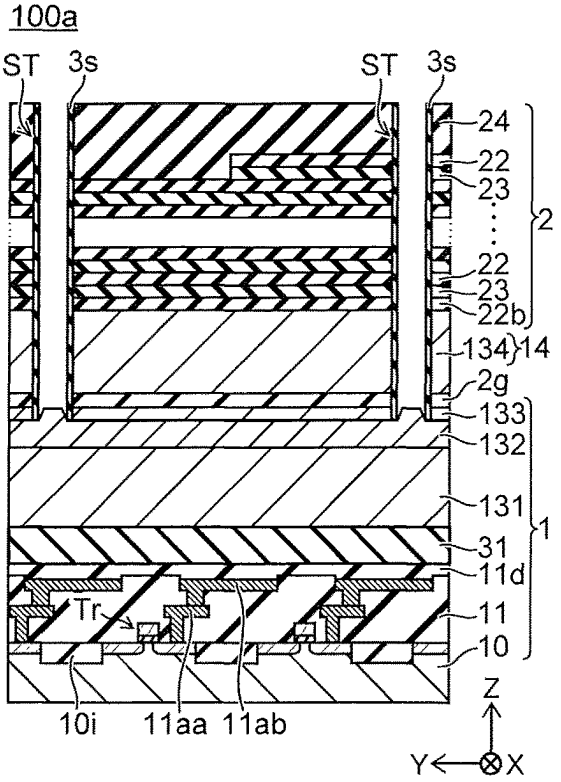

FIG. 28A

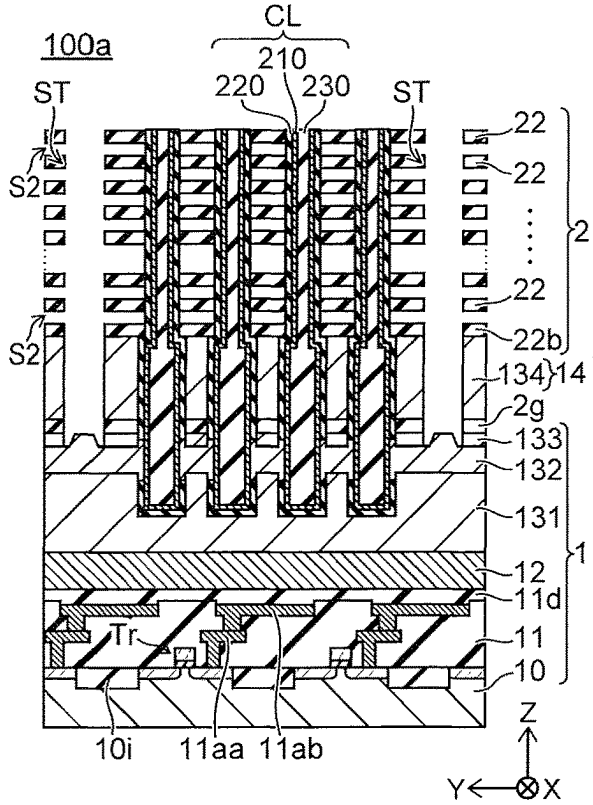

FIG. 28B

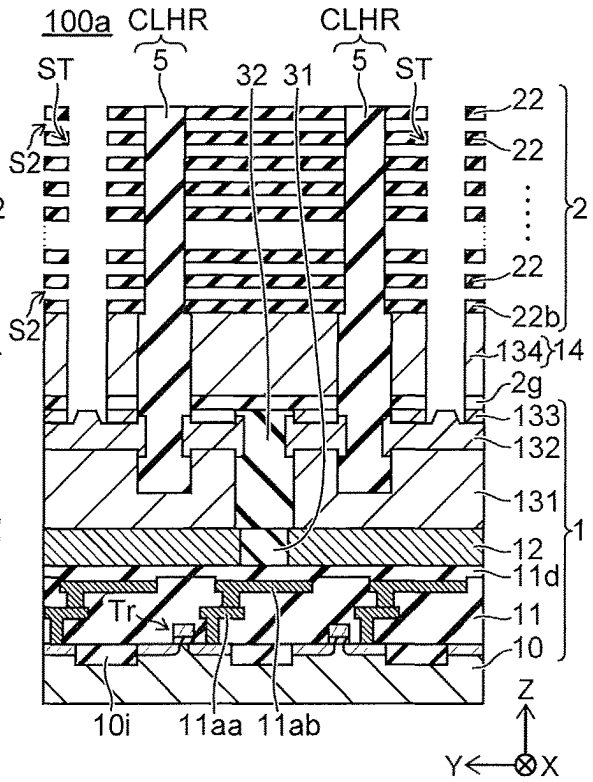

FIG. 28C

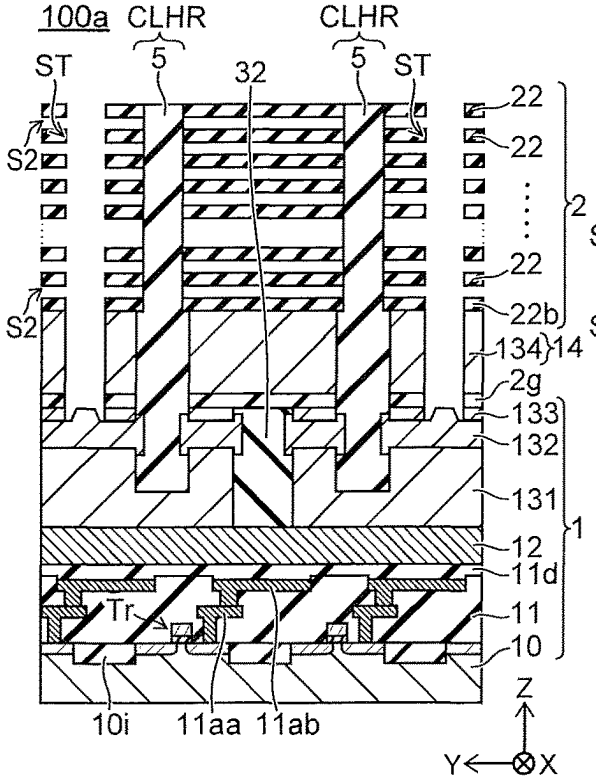

FIG. 28D

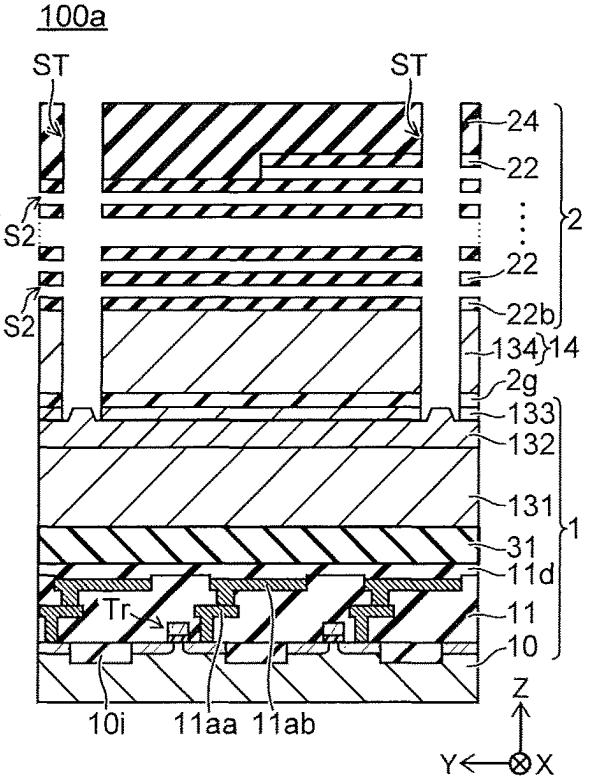

FIG. 29A

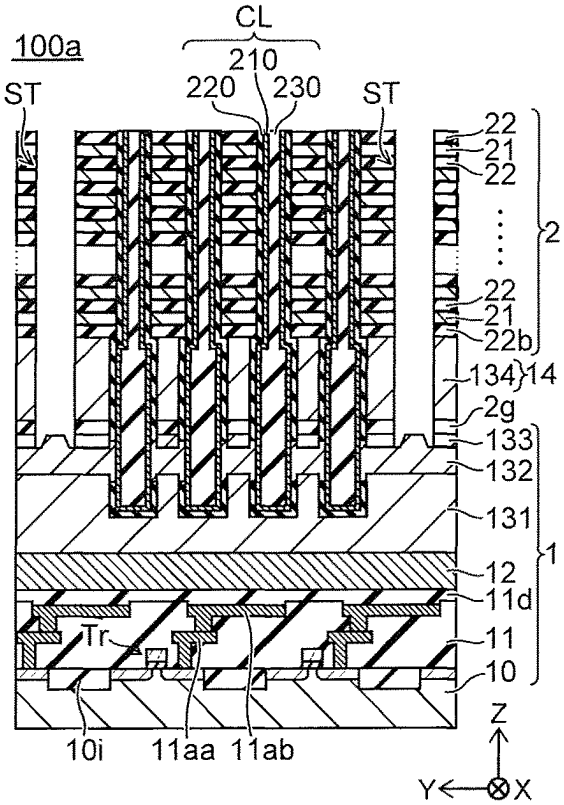

FIG. 29B

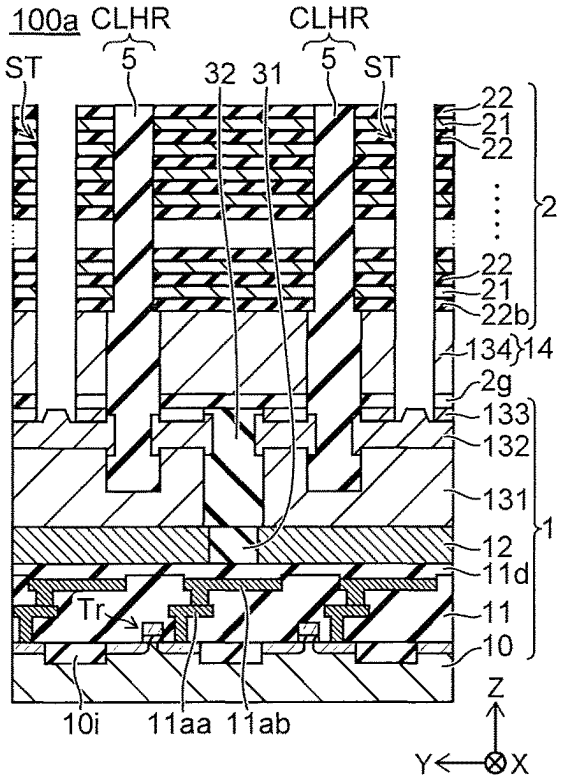

FIG. 29C

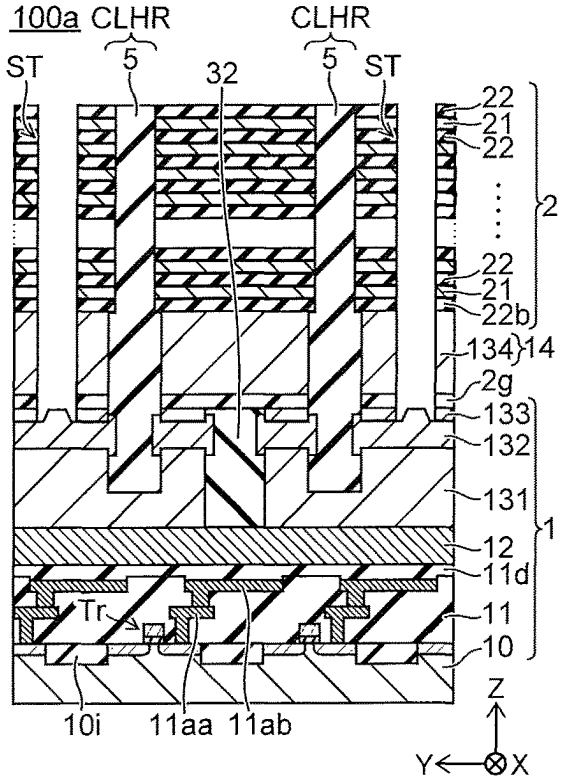

FIG. 29D

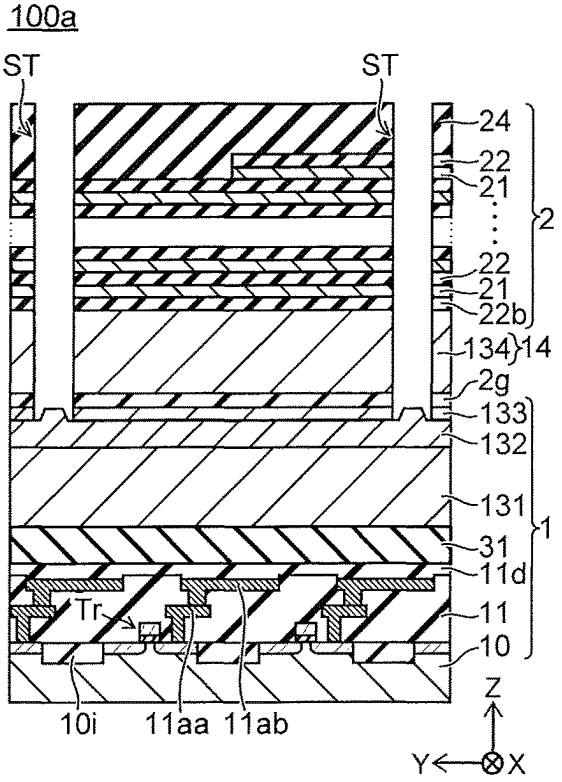

FIG. 30A

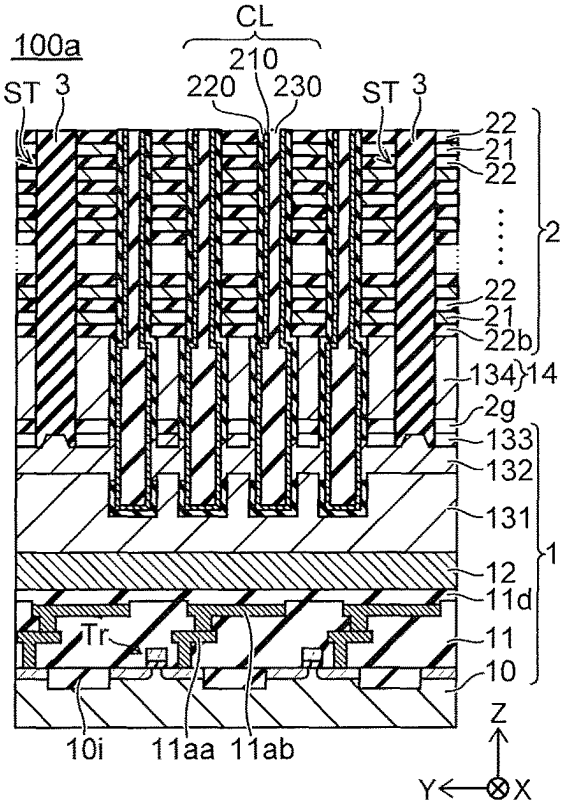

FIG. 30B

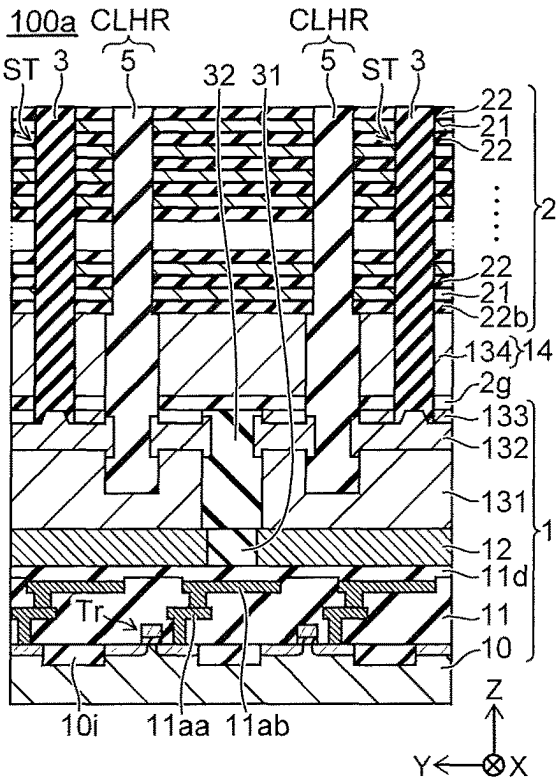

FIG. 30C

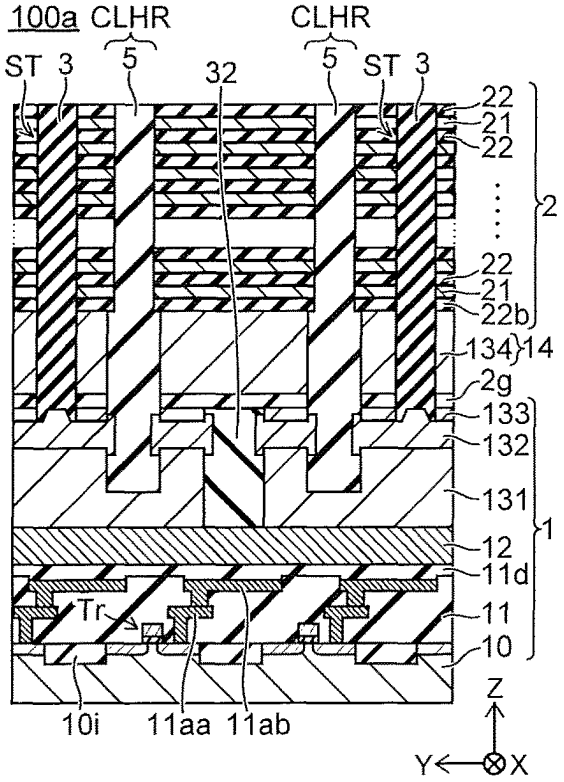

FIG. 30D

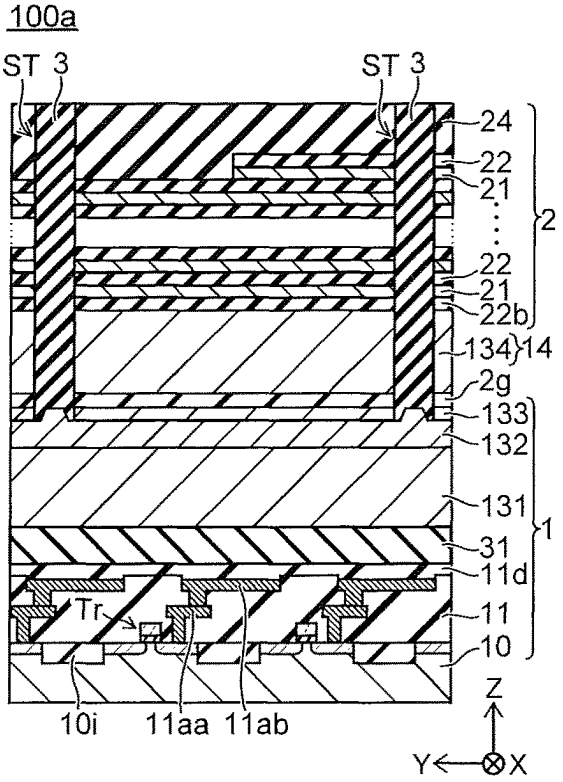

FIG. 31A

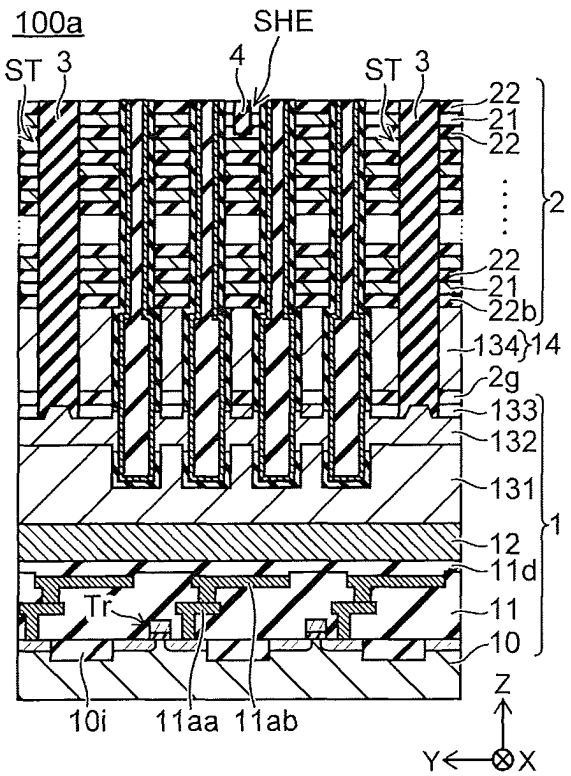

FIG. 31B

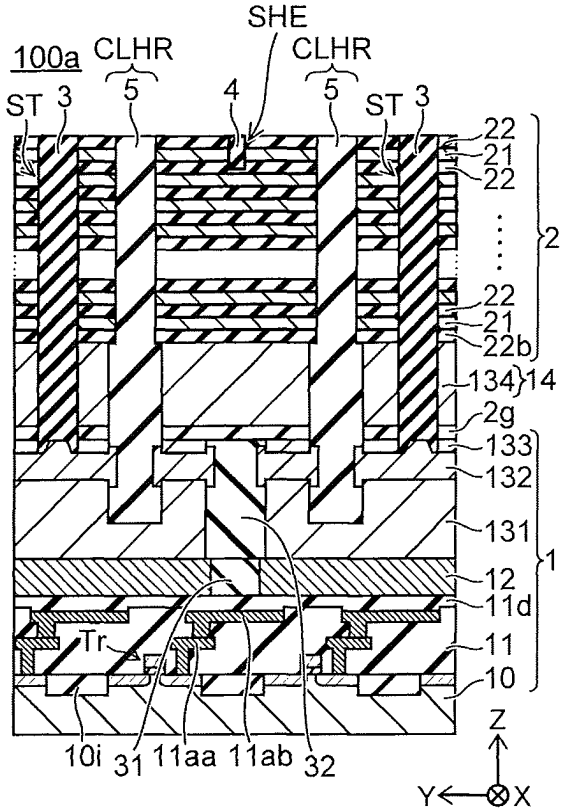

FIG. 31C

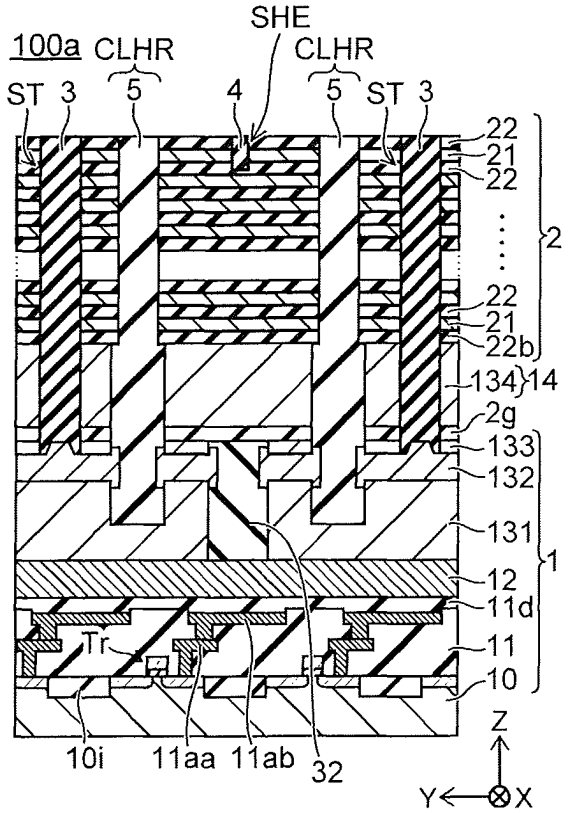

FIG. 31D

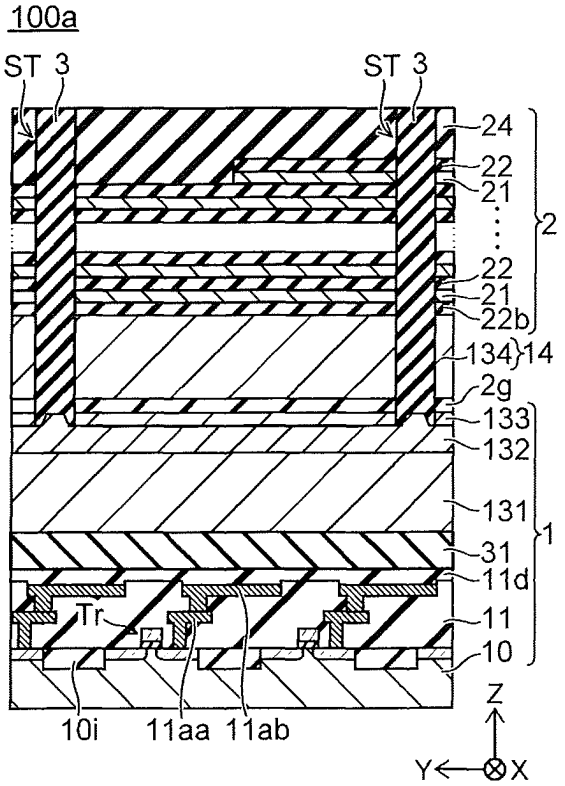

FIG. 32A

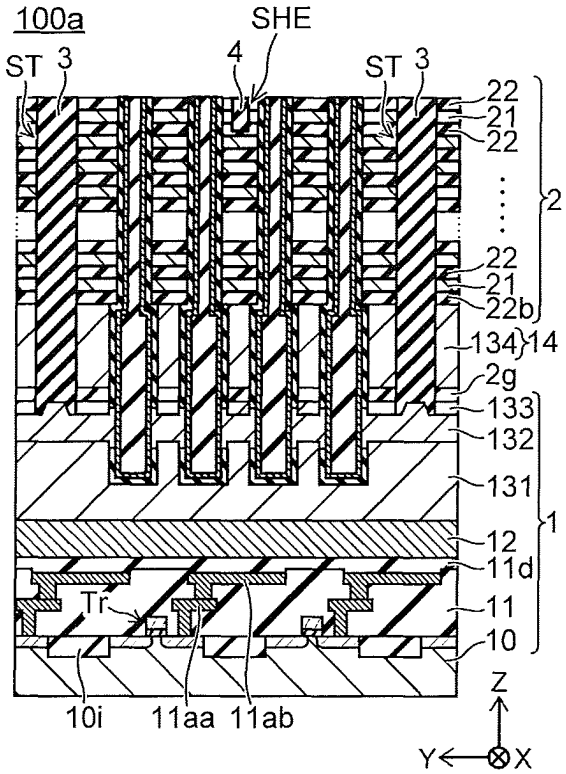

FIG. 32B

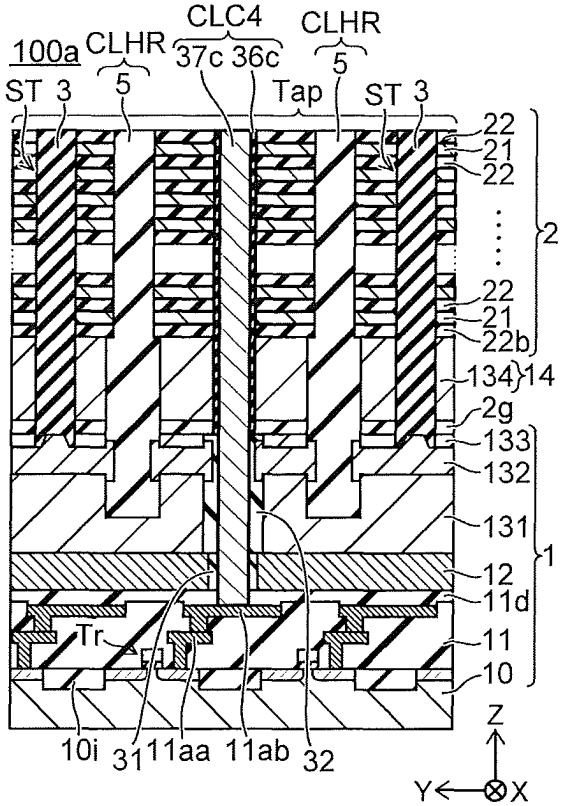

FIG. 32C

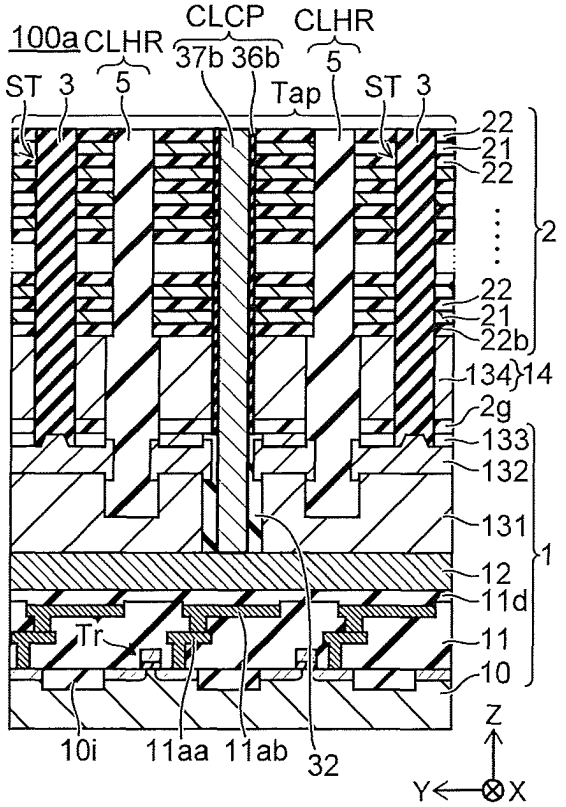

FIG. 32D

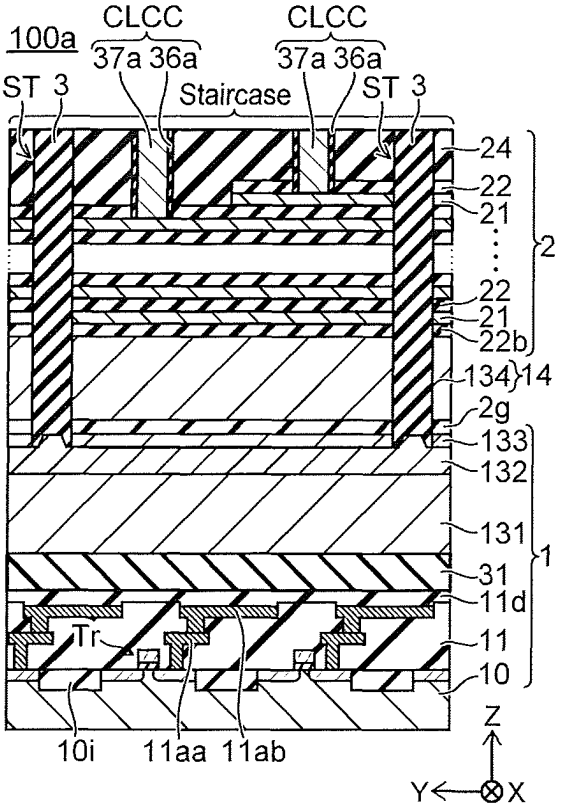

FIG. 33

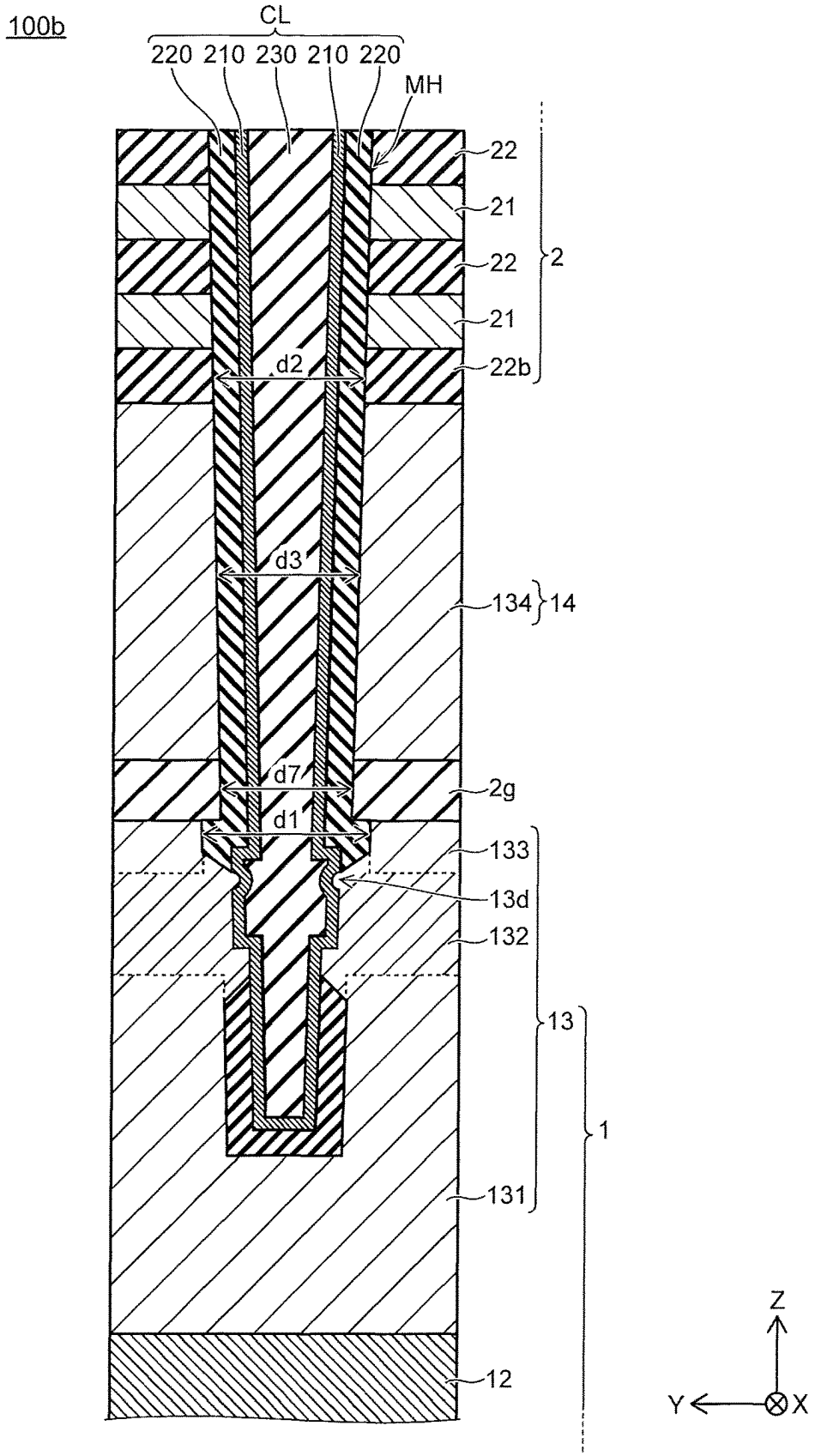
100b
CL
220 210 230 210 220
MH
22
21
22
21
22b
2
d2
d3
134
14
d7
d1
2g
133
13d
132
13
1
131
12
Z
Y
X

FIG. 34

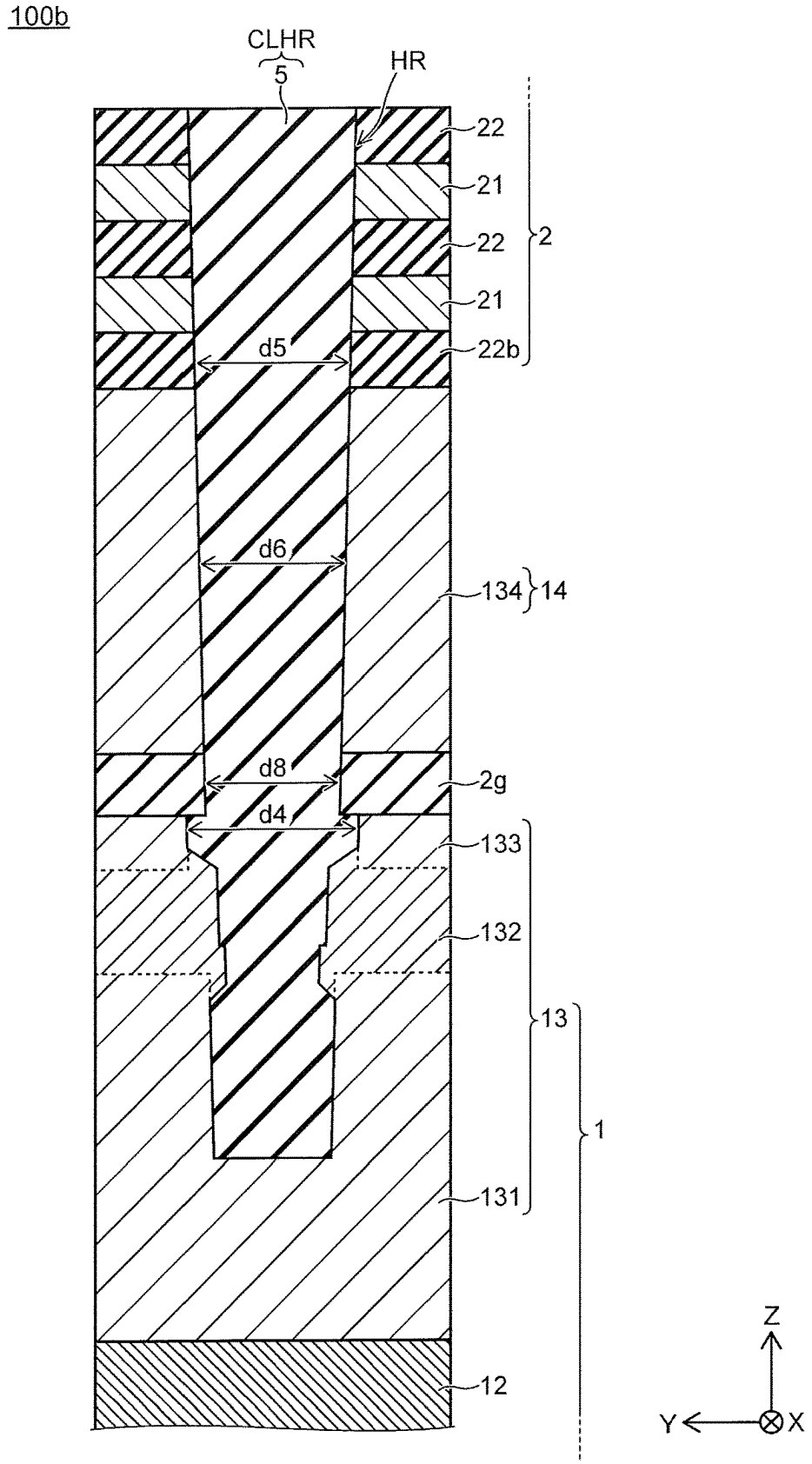
100b
CLHR
5
HR
22
21
22
21
22b
2
d5
d6
134
14
d8
2g
d4
133
132
13
1
131
12
Z
Y
X

FIG. 35A

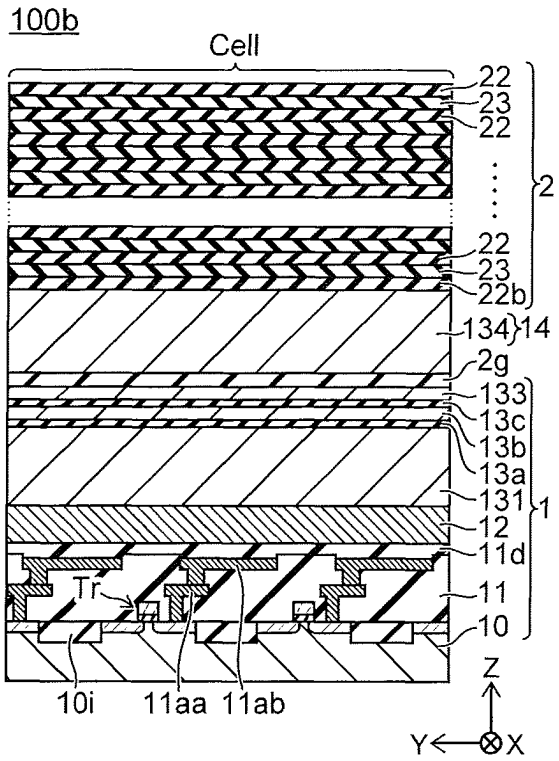

FIG. 35B

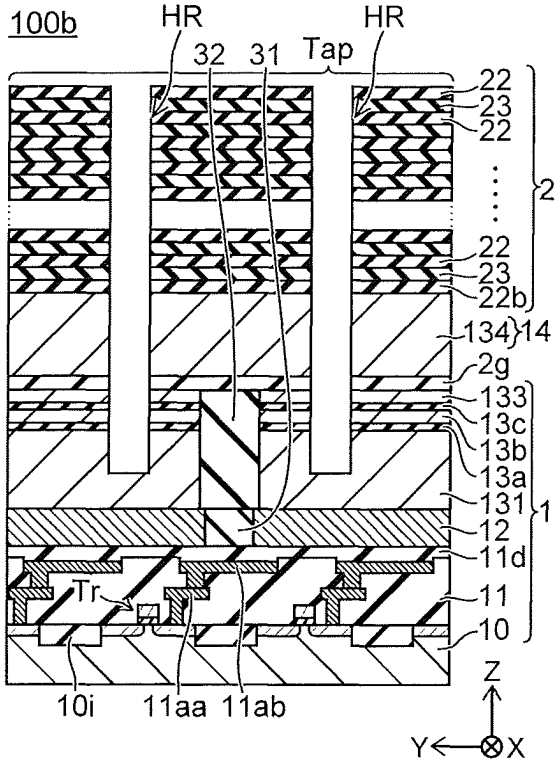

FIG. 35C

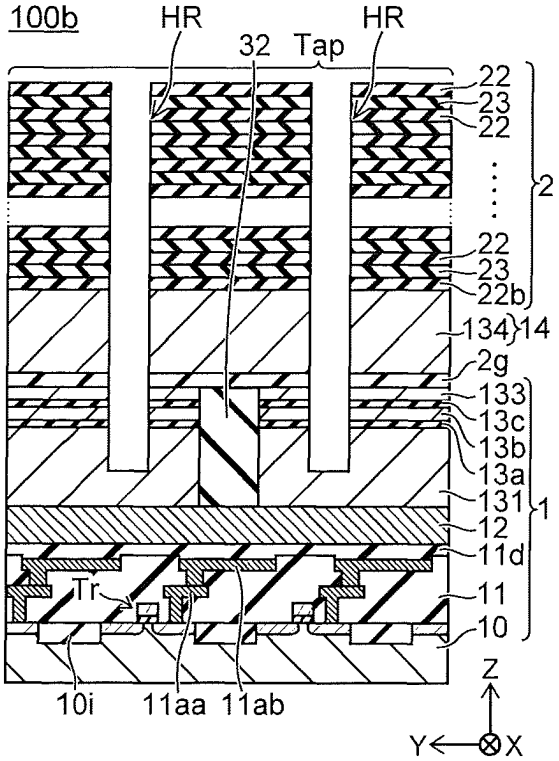

FIG. 35D

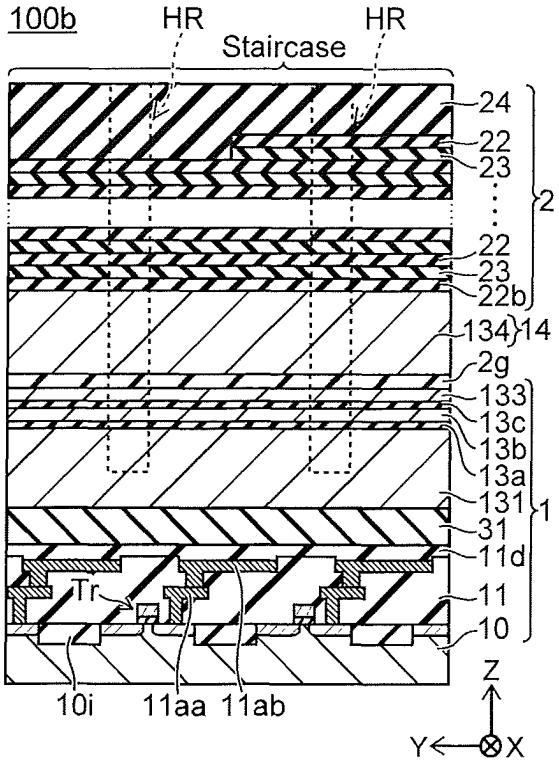

FIG. 36A

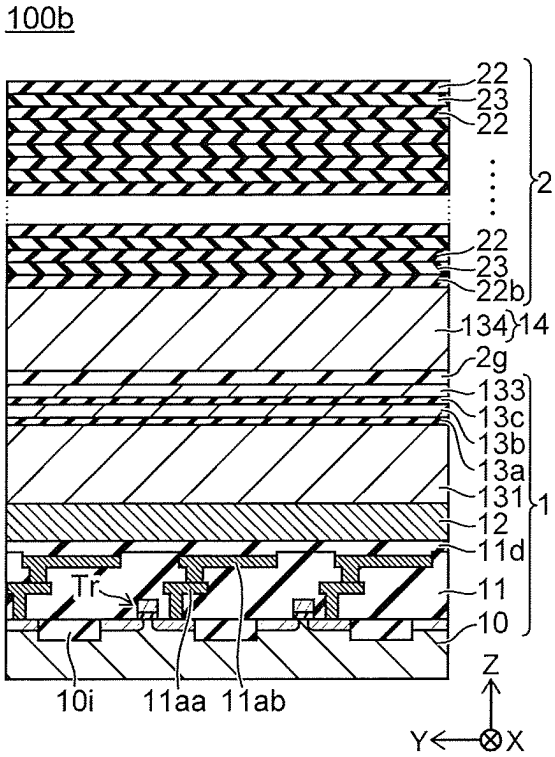

FIG. 36B

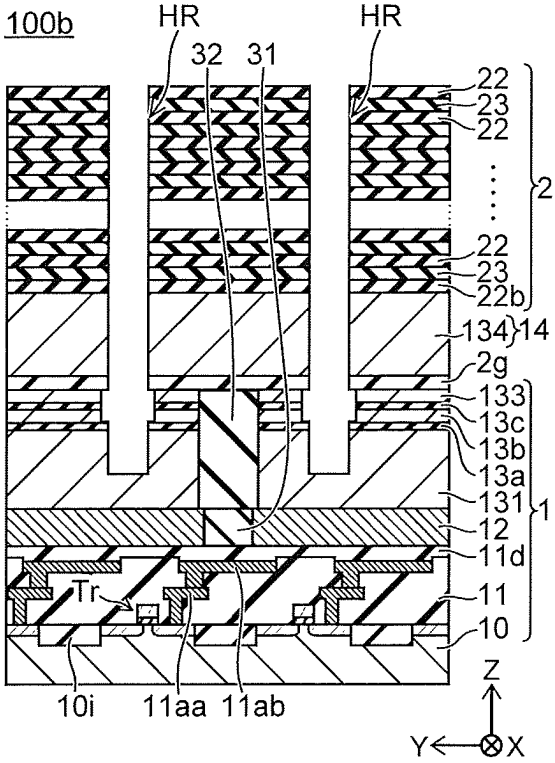

FIG. 36C

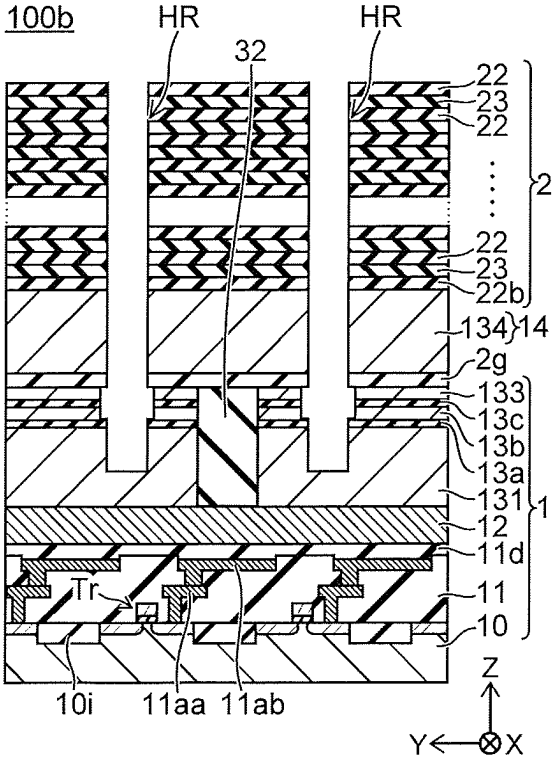

FIG. 36D

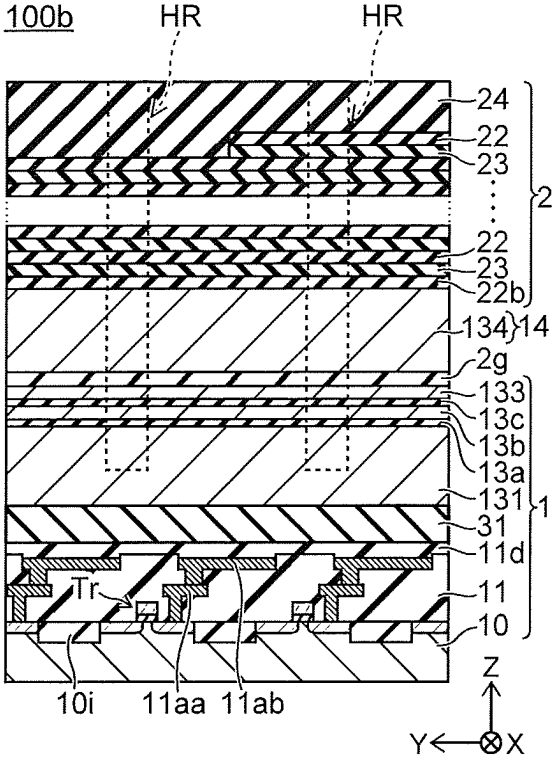

FIG. 37A

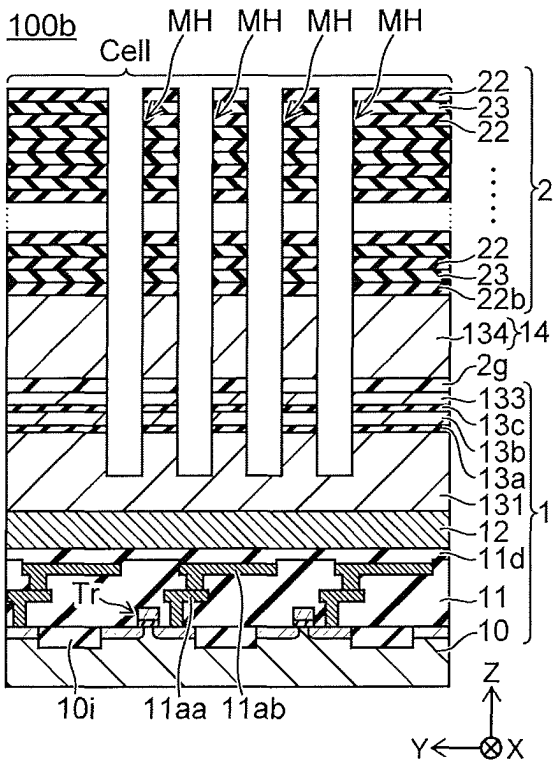

FIG. 37B

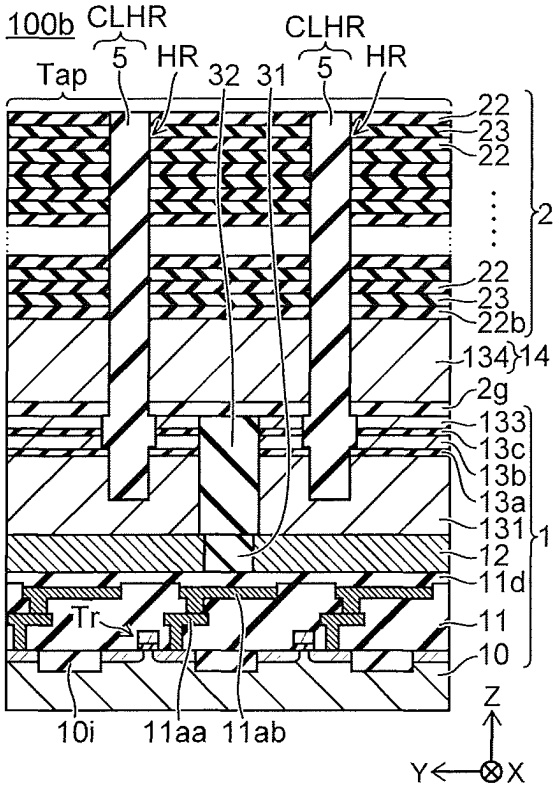

FIG. 37C

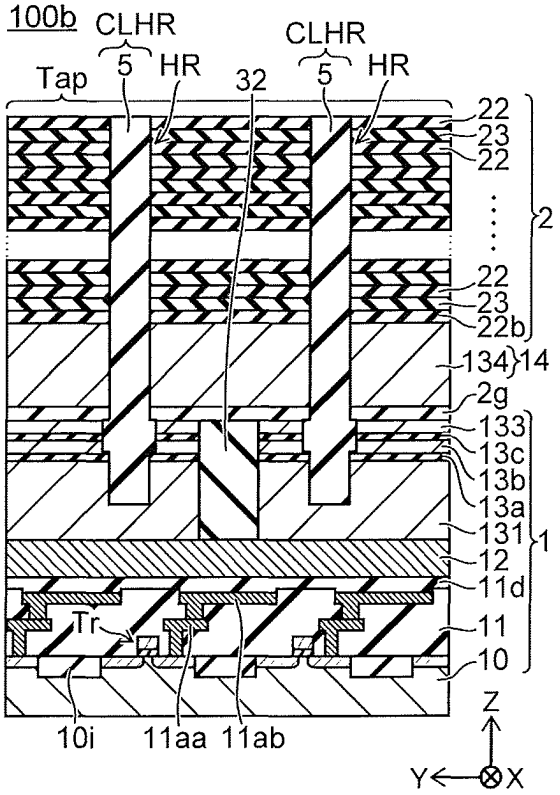

FIG. 37D

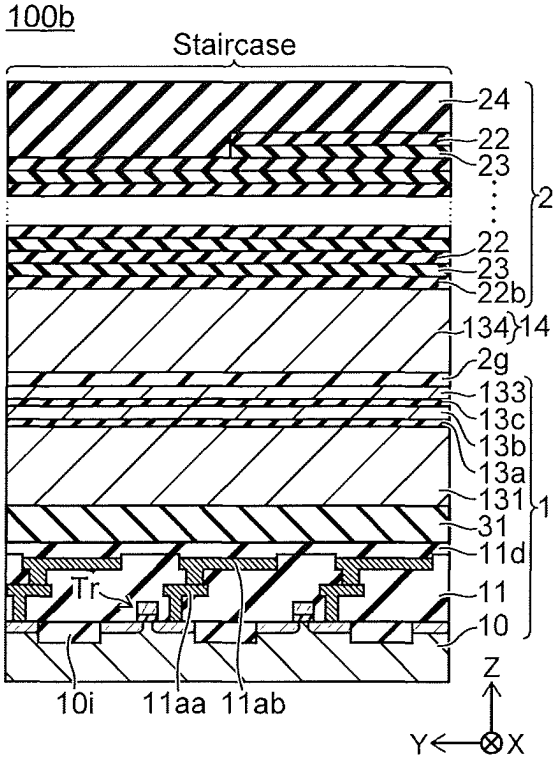

FIG. 38A

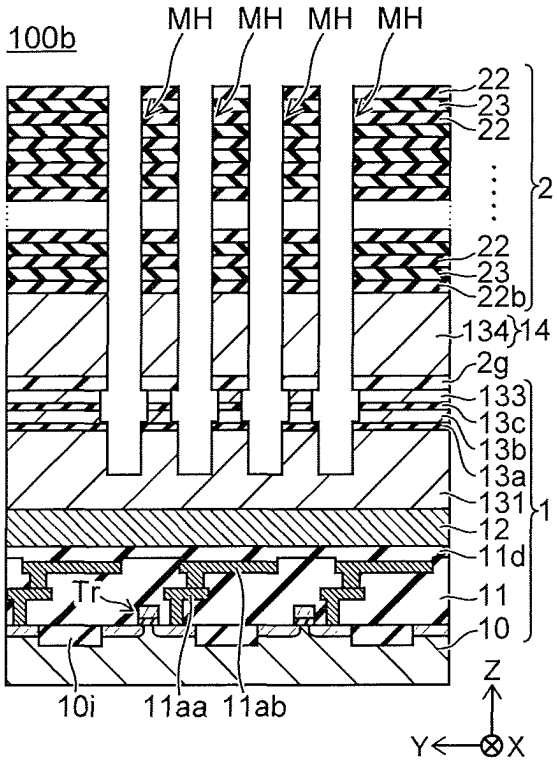

FIG. 38B

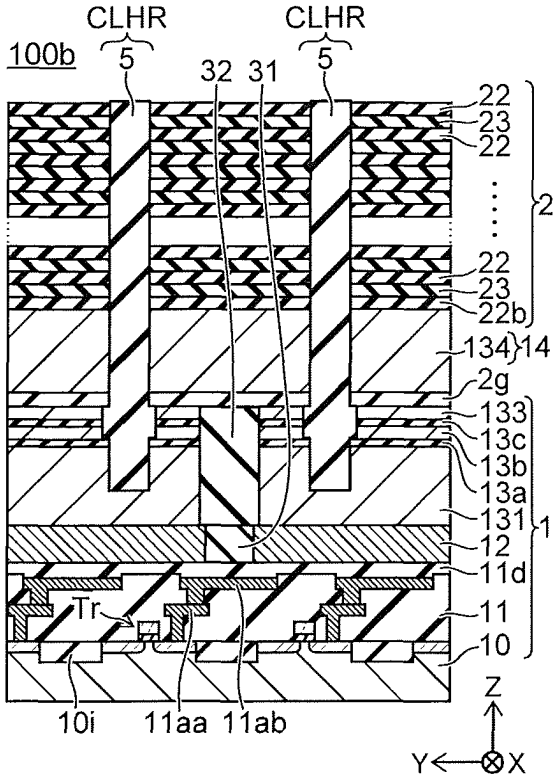

FIG. 38C

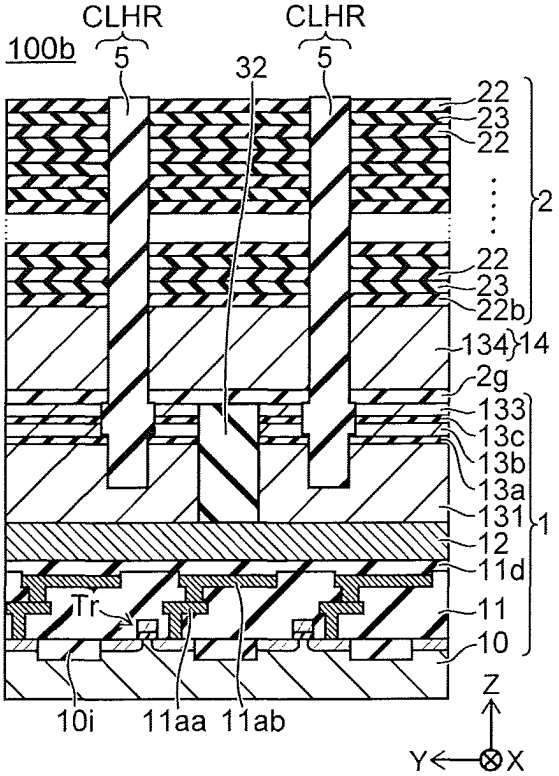

FIG. 38D

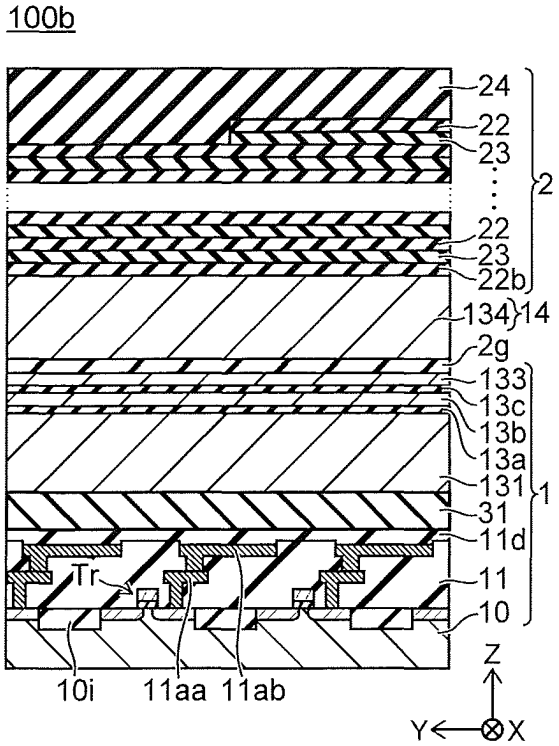

FIG. 39A

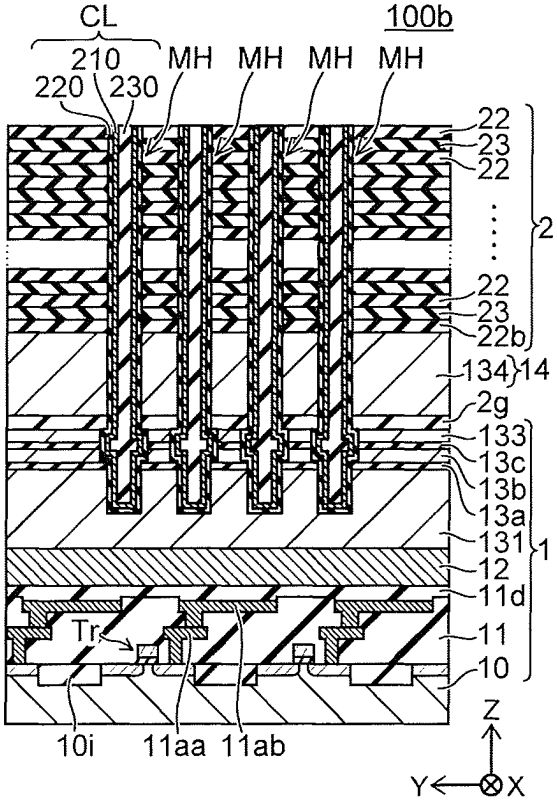

FIG. 39B

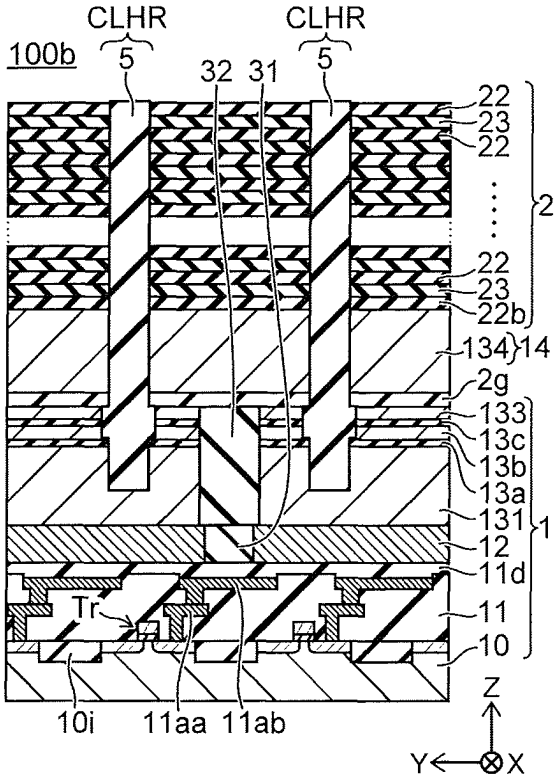

FIG. 39C

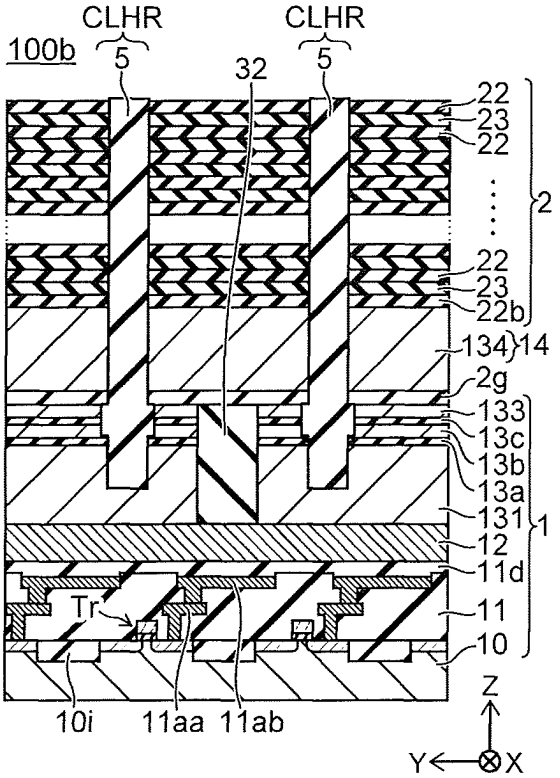

FIG. 39D

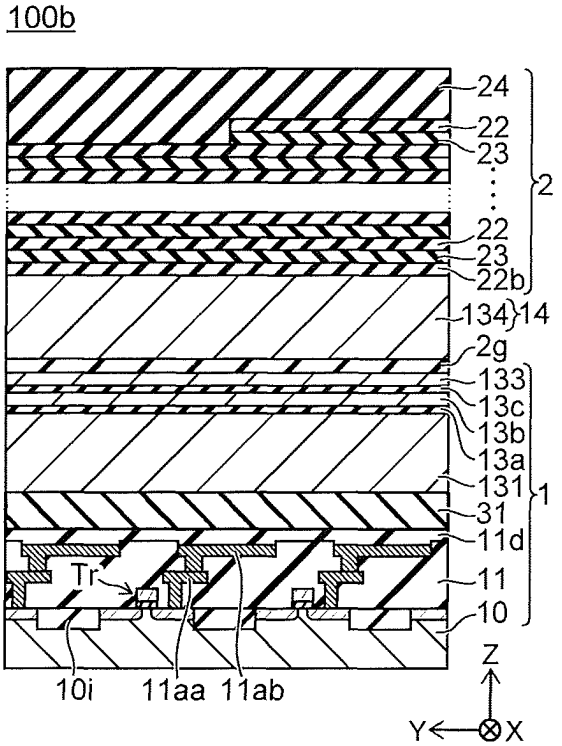

FIG. 40

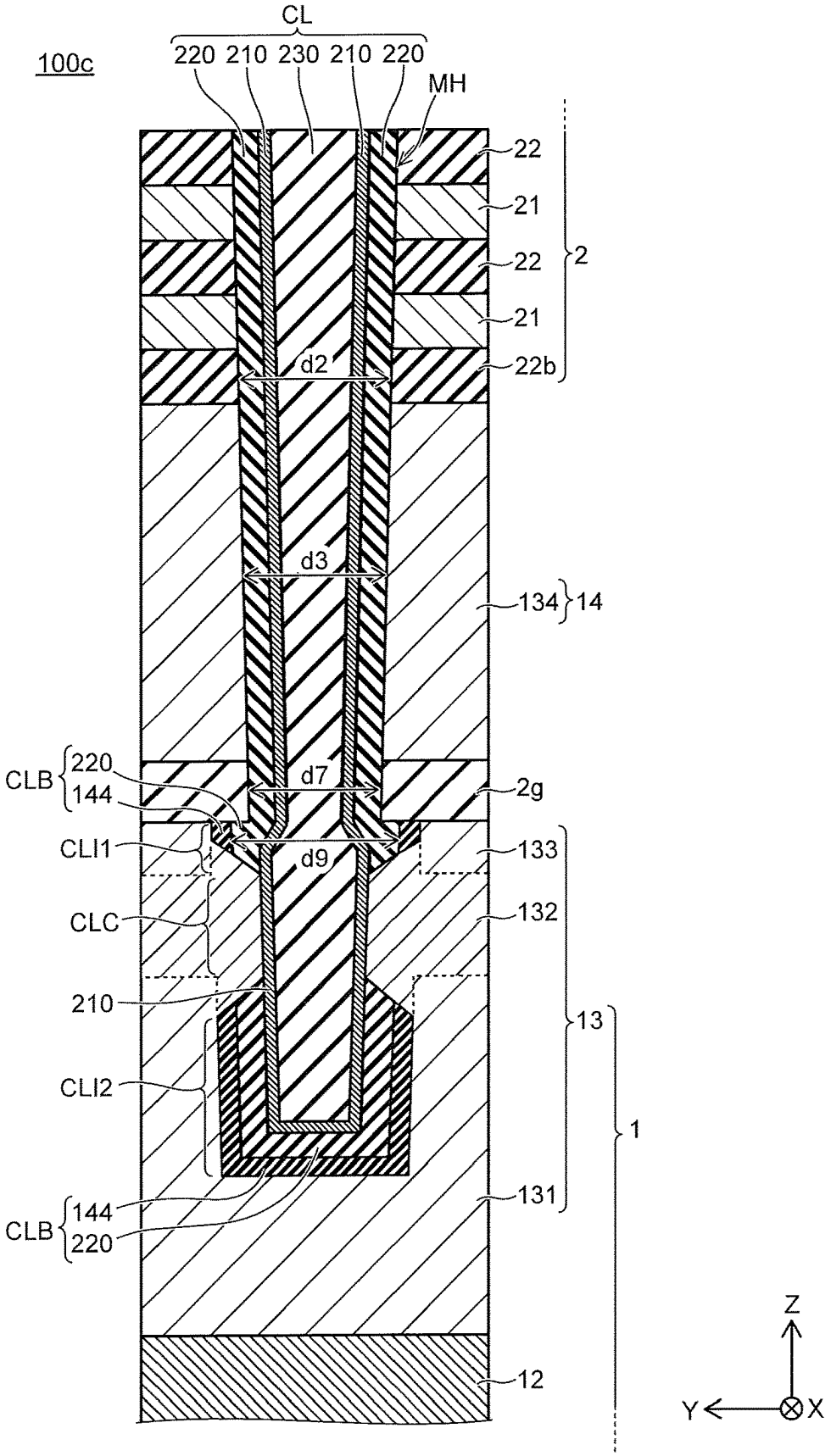
CL
100c
220 210 230 210 220
MH
22
21
22
21
22b
2
d2
d3
134
14
CLB
220
144
d7
2g
CLI1
d9
133
CLC
132
210
13
CLI2
1
144
CLB
220
131
12
Z
Y
X

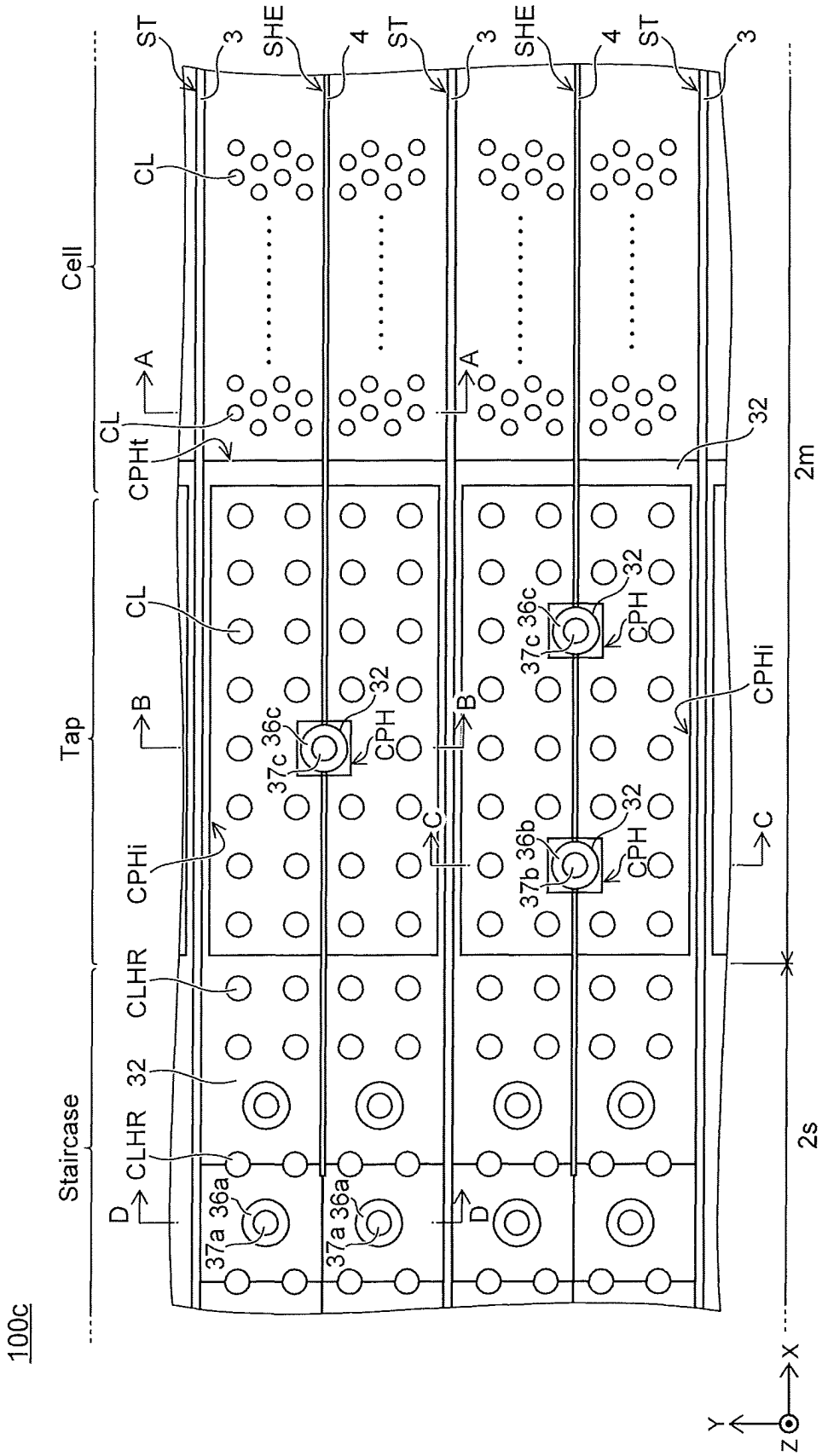
100c
Staircase
Tap
Cell
ST
3
SHE
4
CL
CPHt
CPHi
CLHR
32
A
B
C
D
37a 36a
37b 36b
37c 36c
CPH
2s
2m
X
Y
Z

FIG. 41

FIG. 42A

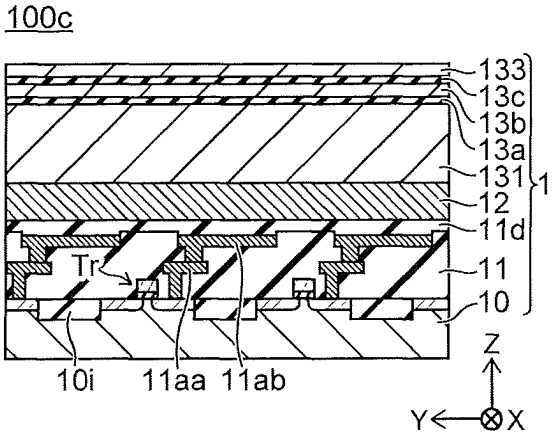

FIG. 42B

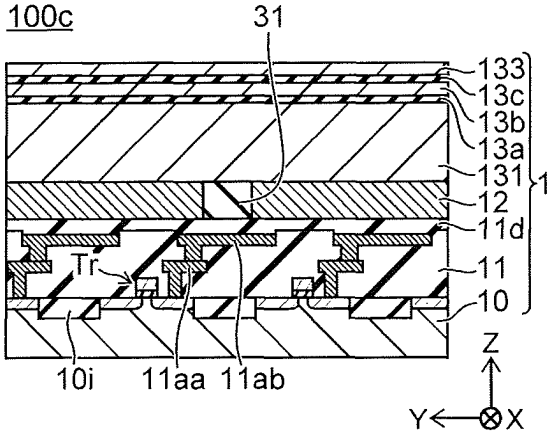

FIG. 42C

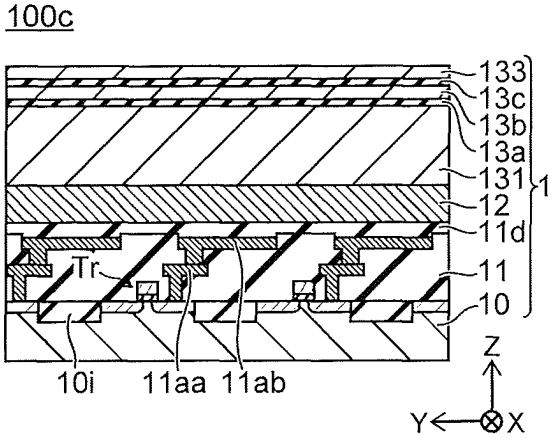

FIG. 42D

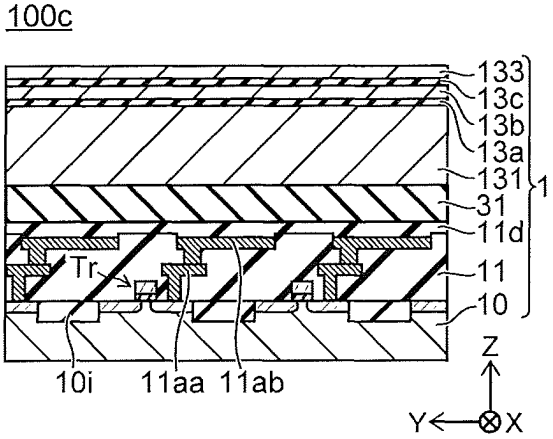

FIG. 43A

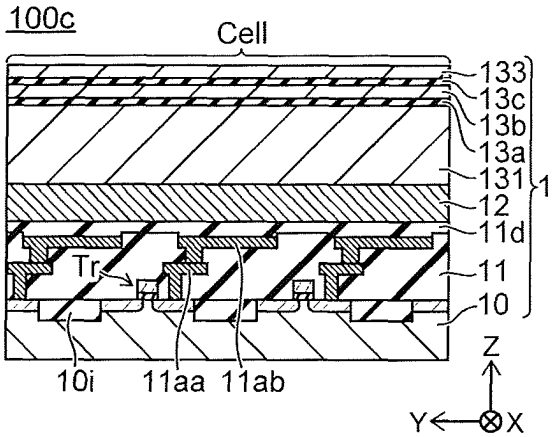

FIG. 43B

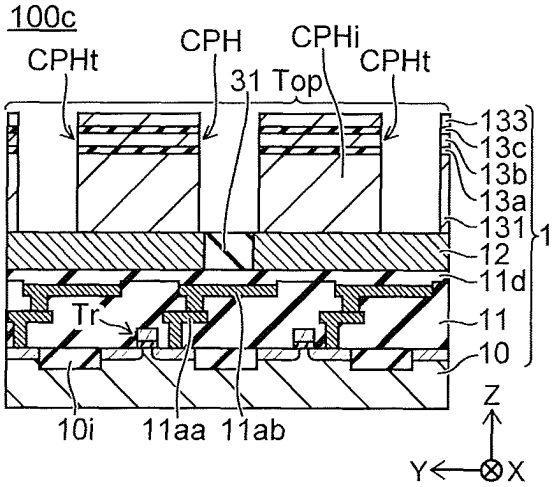

FIG. 43C

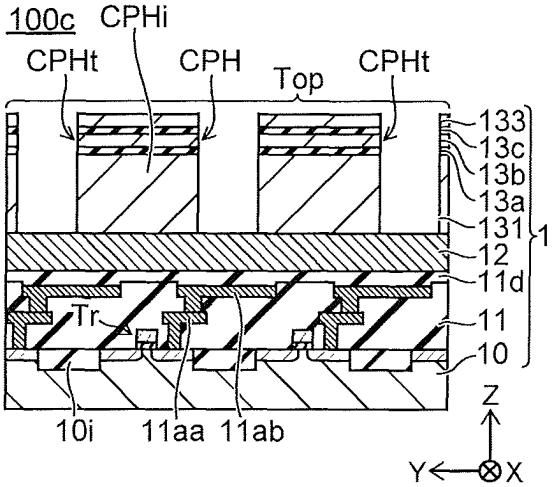

FIG. 43D

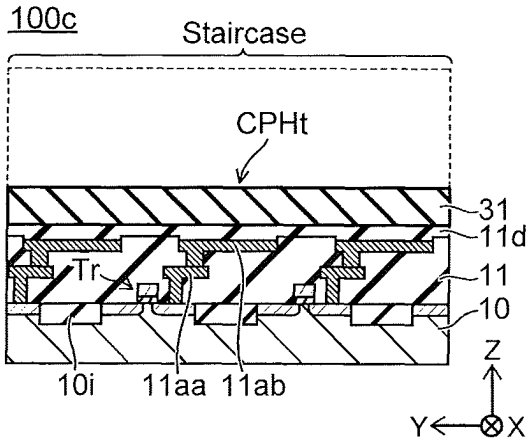

FIG. 44A

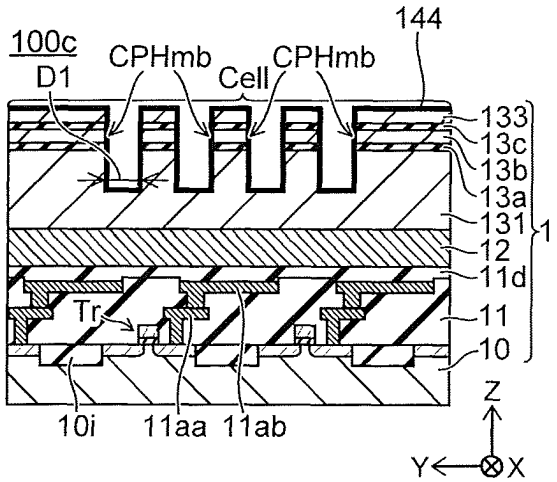

FIG. 44B

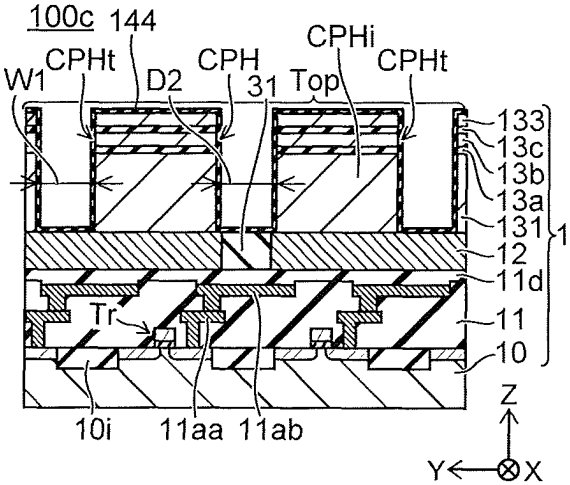

FIG. 44C

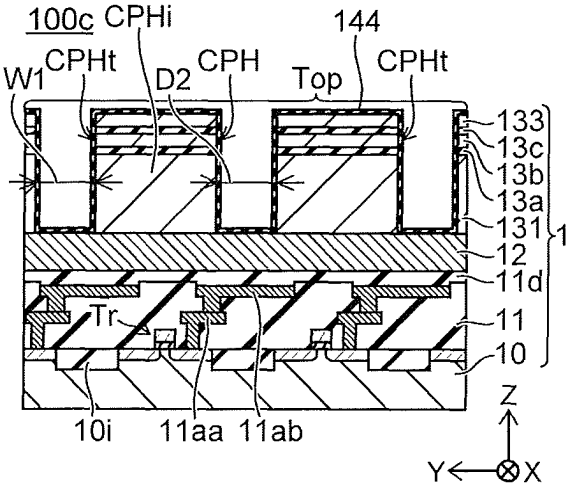

FIG. 44D

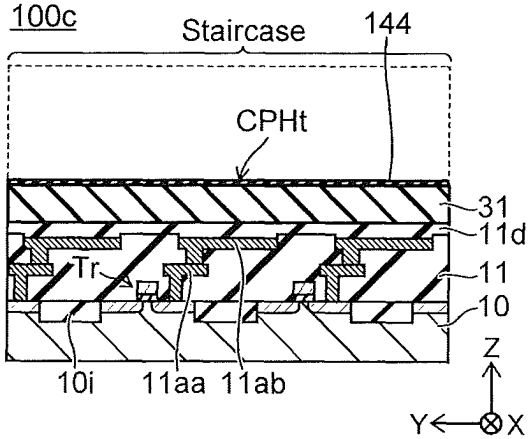

FIG. 45A

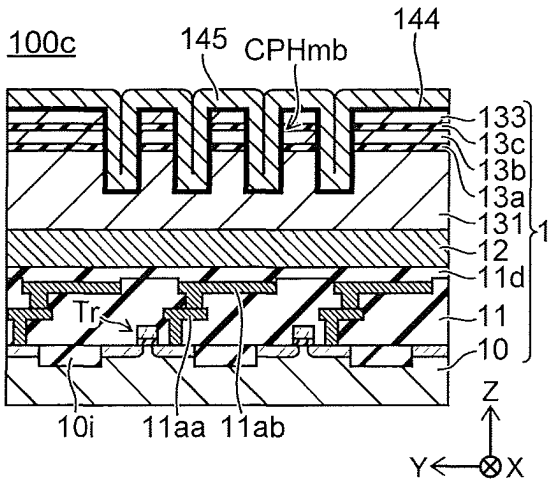

FIG. 45B

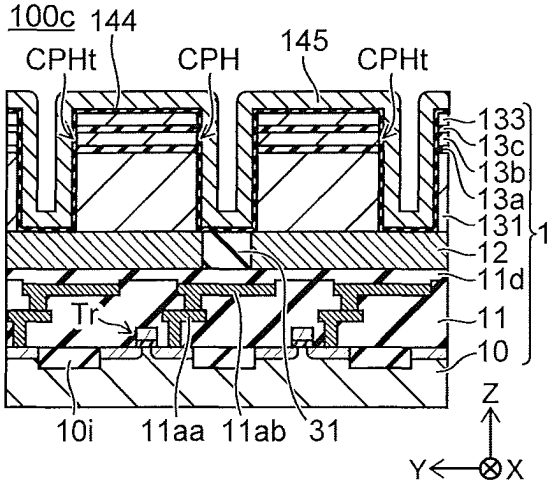

FIG. 45C

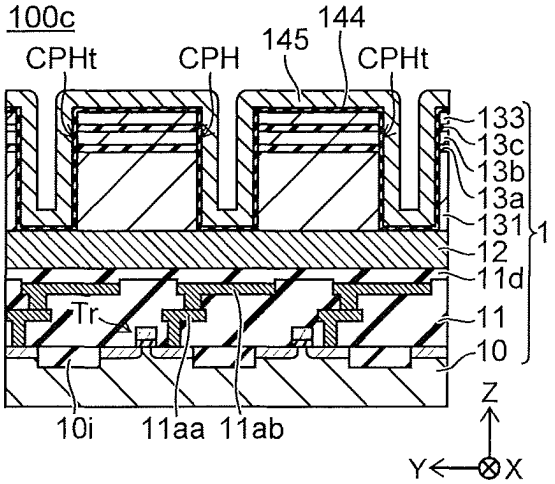

FIG. 45D

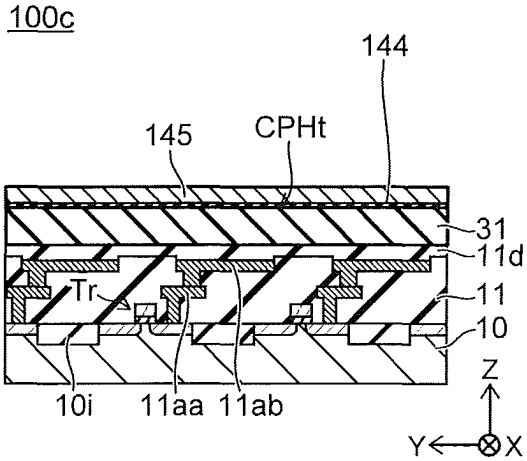

FIG. 46A

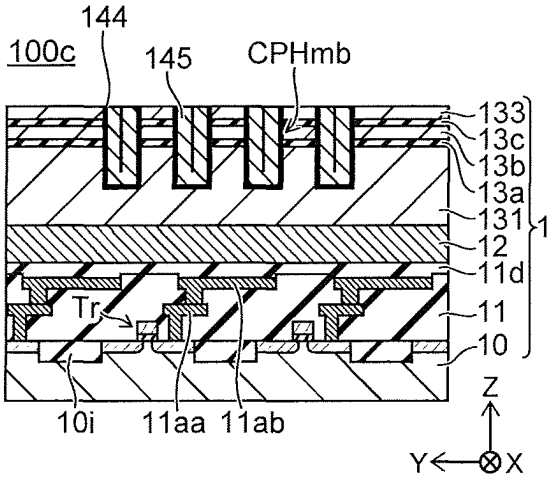

FIG. 46B

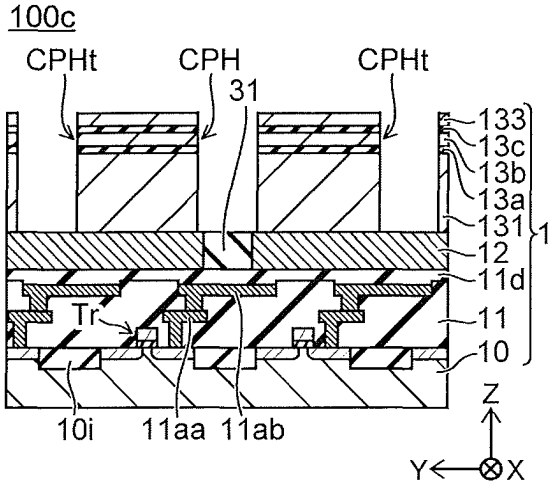

FIG. 46C

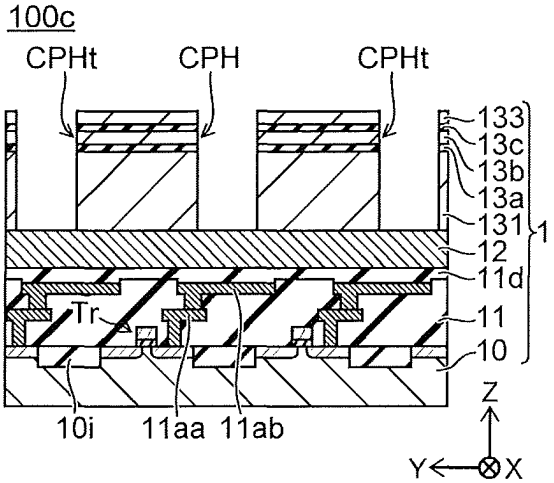

FIG. 46D

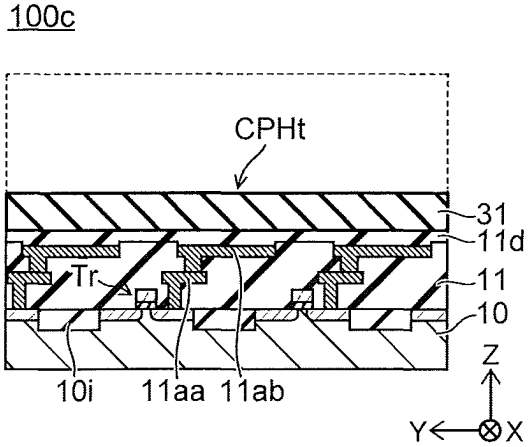

FIG. 47A

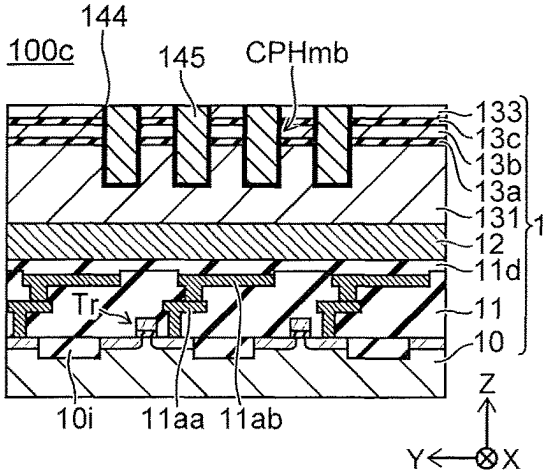

FIG. 47B

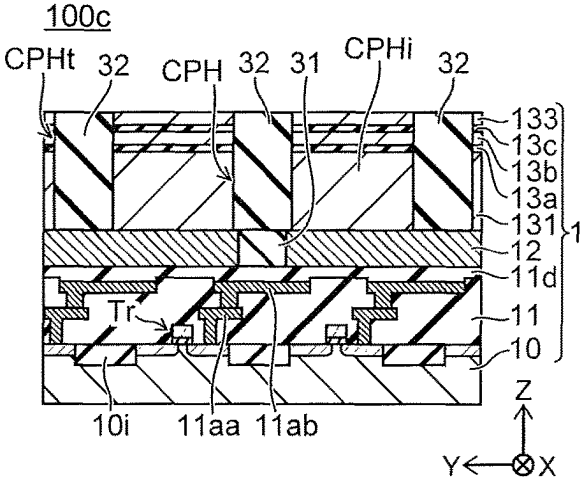

FIG. 47C

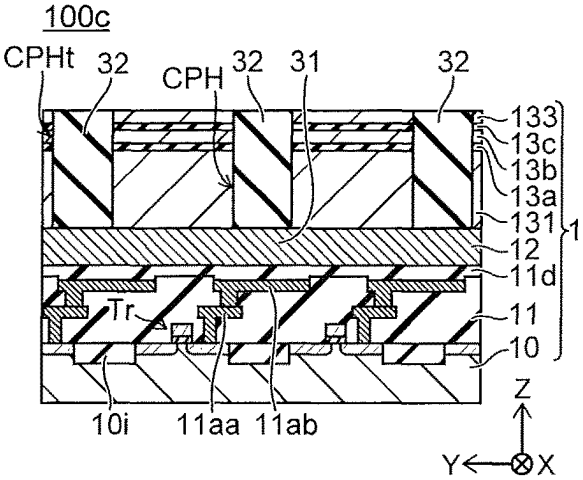

FIG. 47D

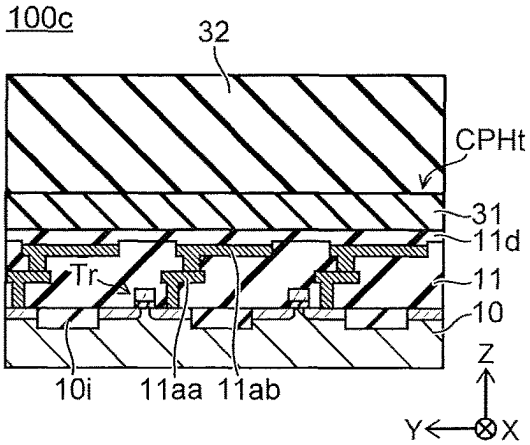

FIG. 48A

100c

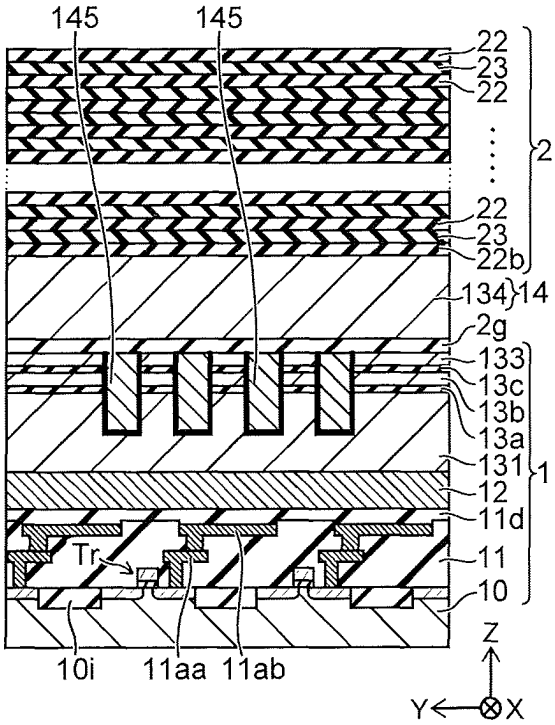

FIG. 48B

100c

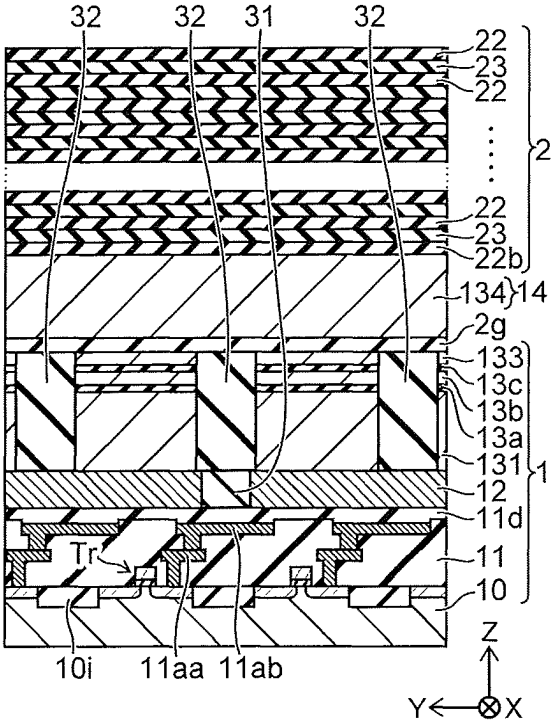

FIG. 48C

100c

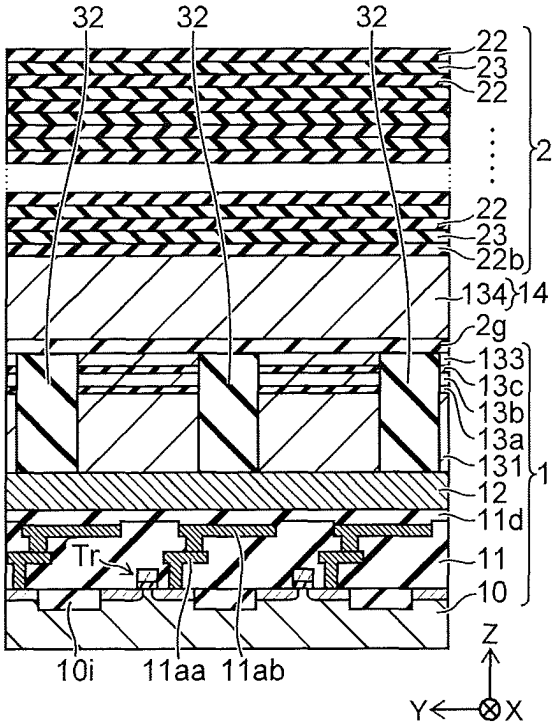

FIG. 48D

100c

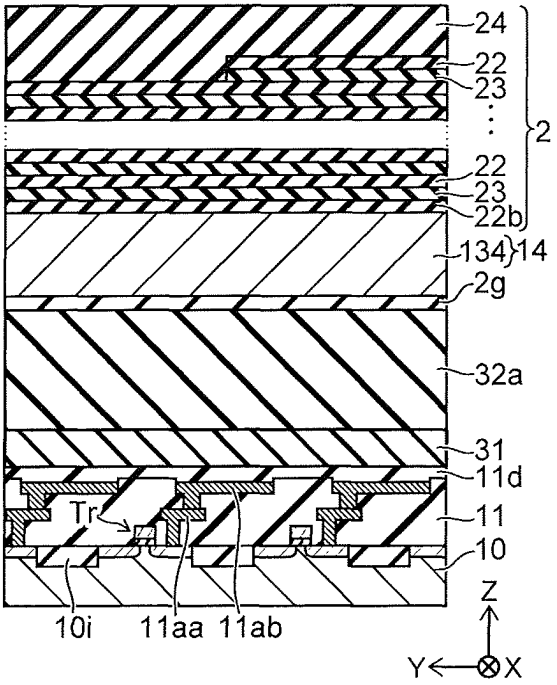

FIG. 49

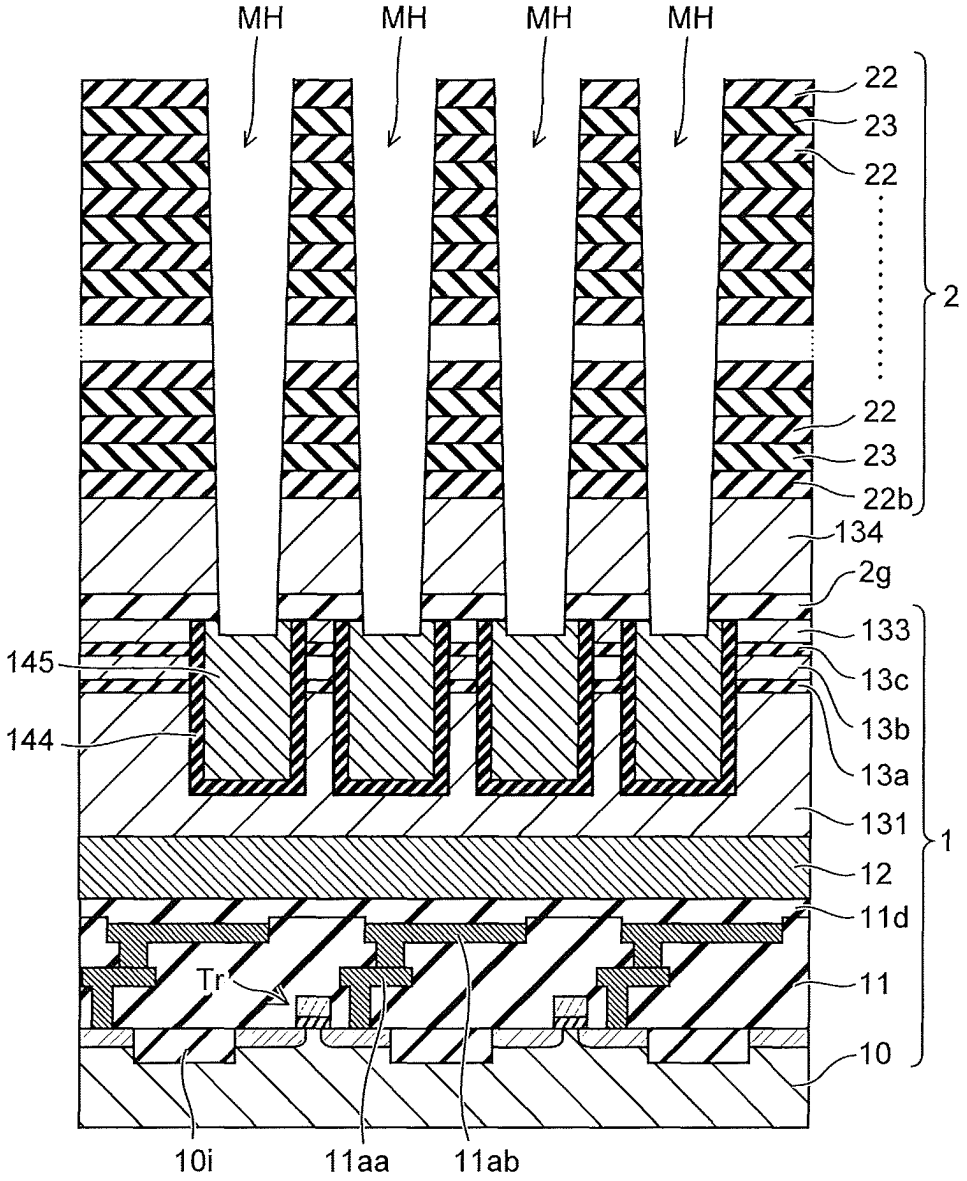
MH
MH
MH
MH
22
23
22
2
22
23
22b
134
2g
133
145
13c
13b
144
13a
131
1
12
11d
Tr
11
10
10i
11aa
11ab

FIG. 50

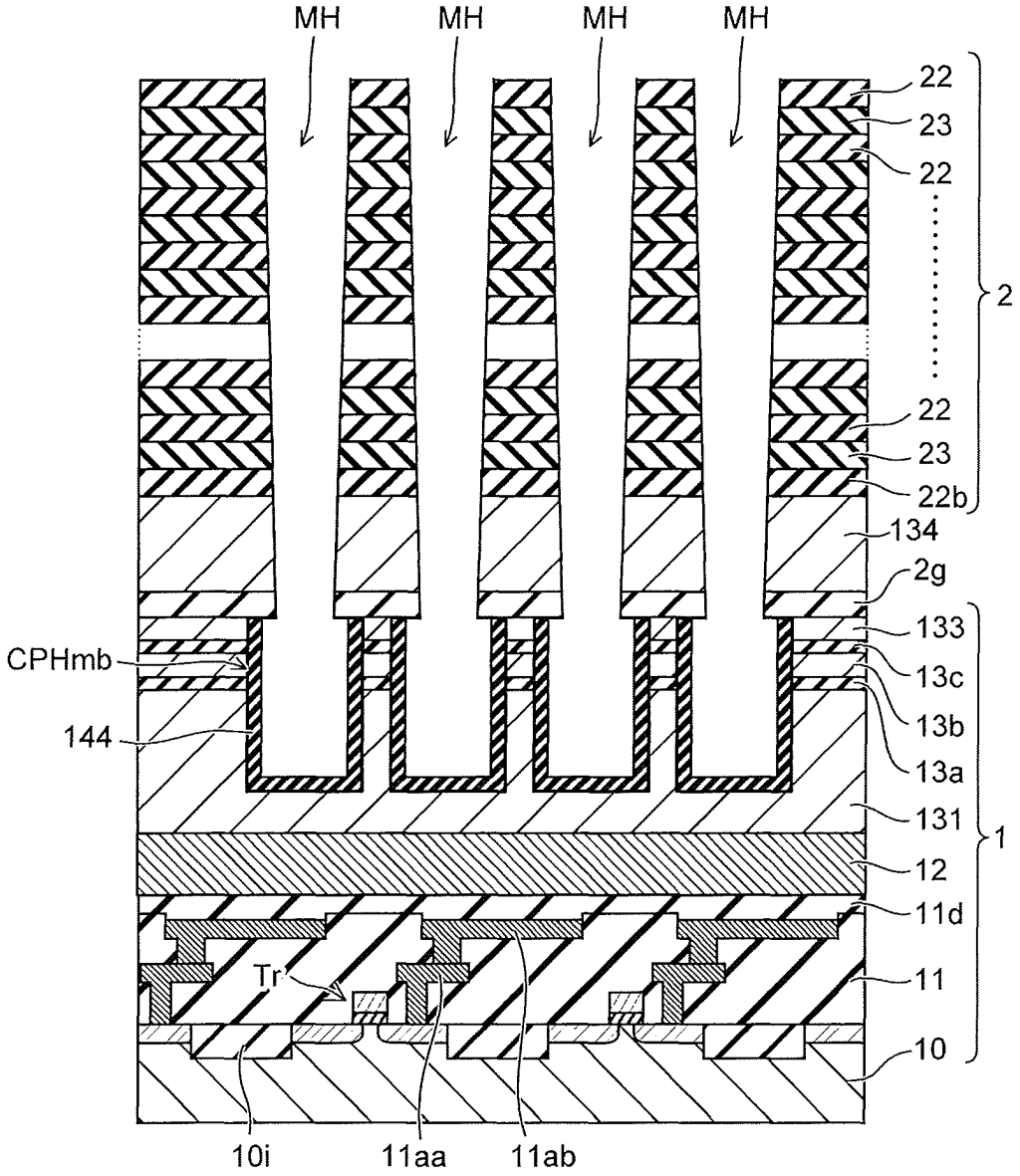
MH
MH
MH
MH
22
23
22
2
22
23
22b
134
2g
133
13c
13b
13a
131
1
12
11d
11
10
CPHmb
144
Tr
10i
11aa
11ab

FIG. 51

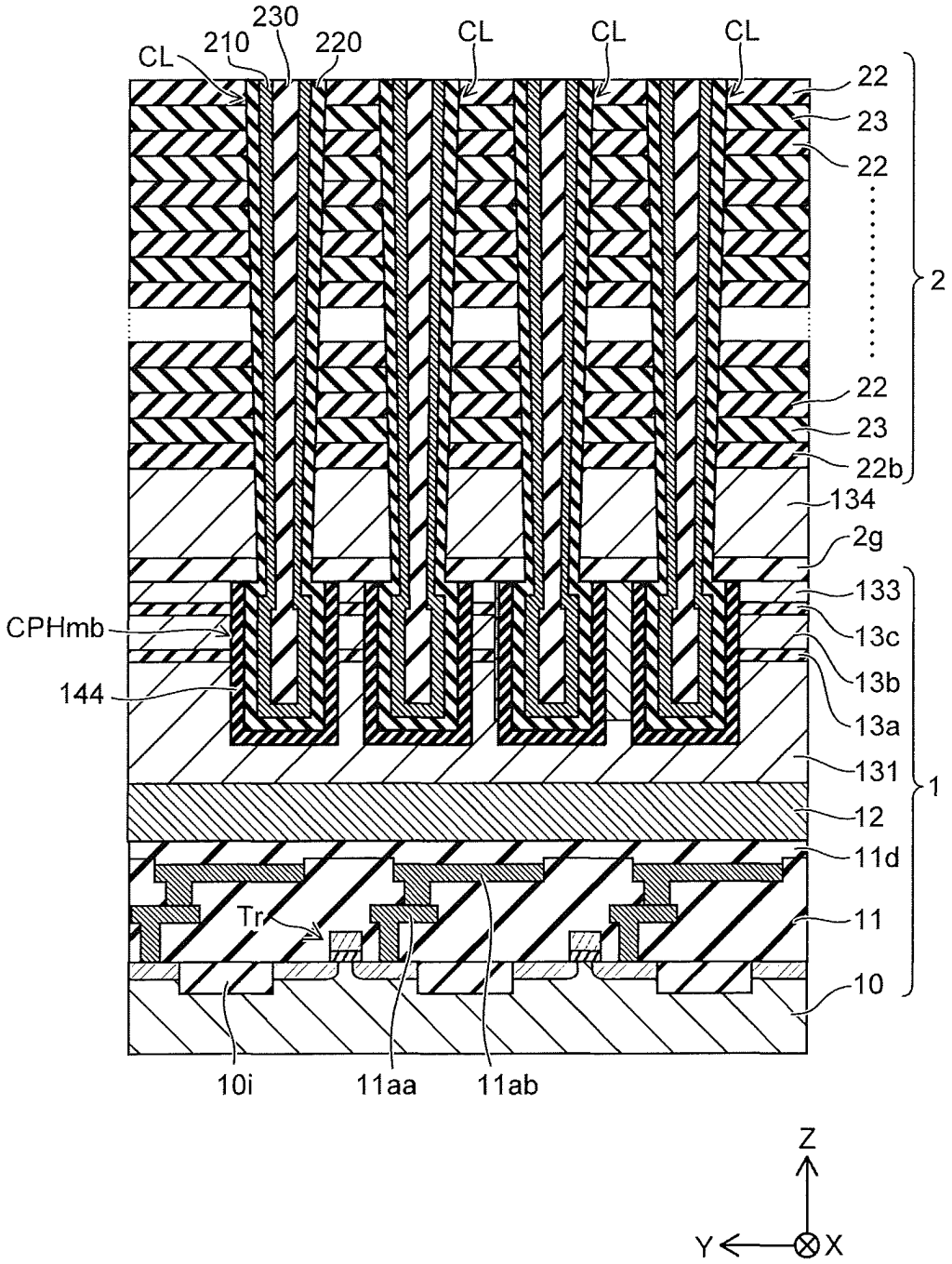
230
210
220
CL
CL
CL
CL
22
23
22
2
22
23
22b
134
2g
133
CPHmb
13c
144
13b
13a
131
1
12
11d
Tr
11
10
10i
11aa
11ab
Z
Y
X

FIG. 52

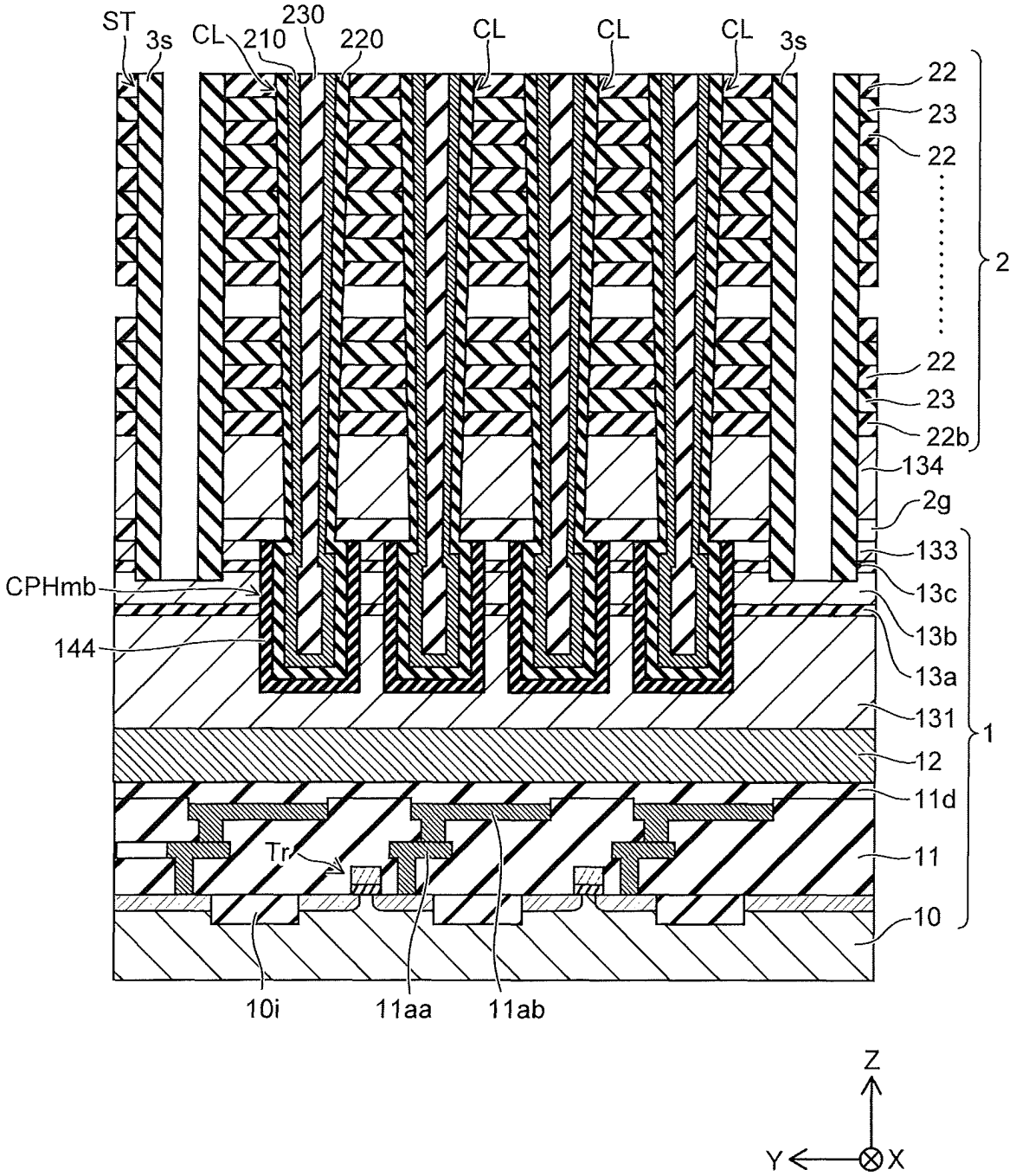
ST
3s
CL
210
230
220
CL
CL
CL
3s
22
23
22
2
22
23
22b
134
2g
133
13c
13b
13a
131
12
11d
11
10
1
CPHmb
144
Tr
10i
11aa
11ab
Z
Y
X

FIG. 53

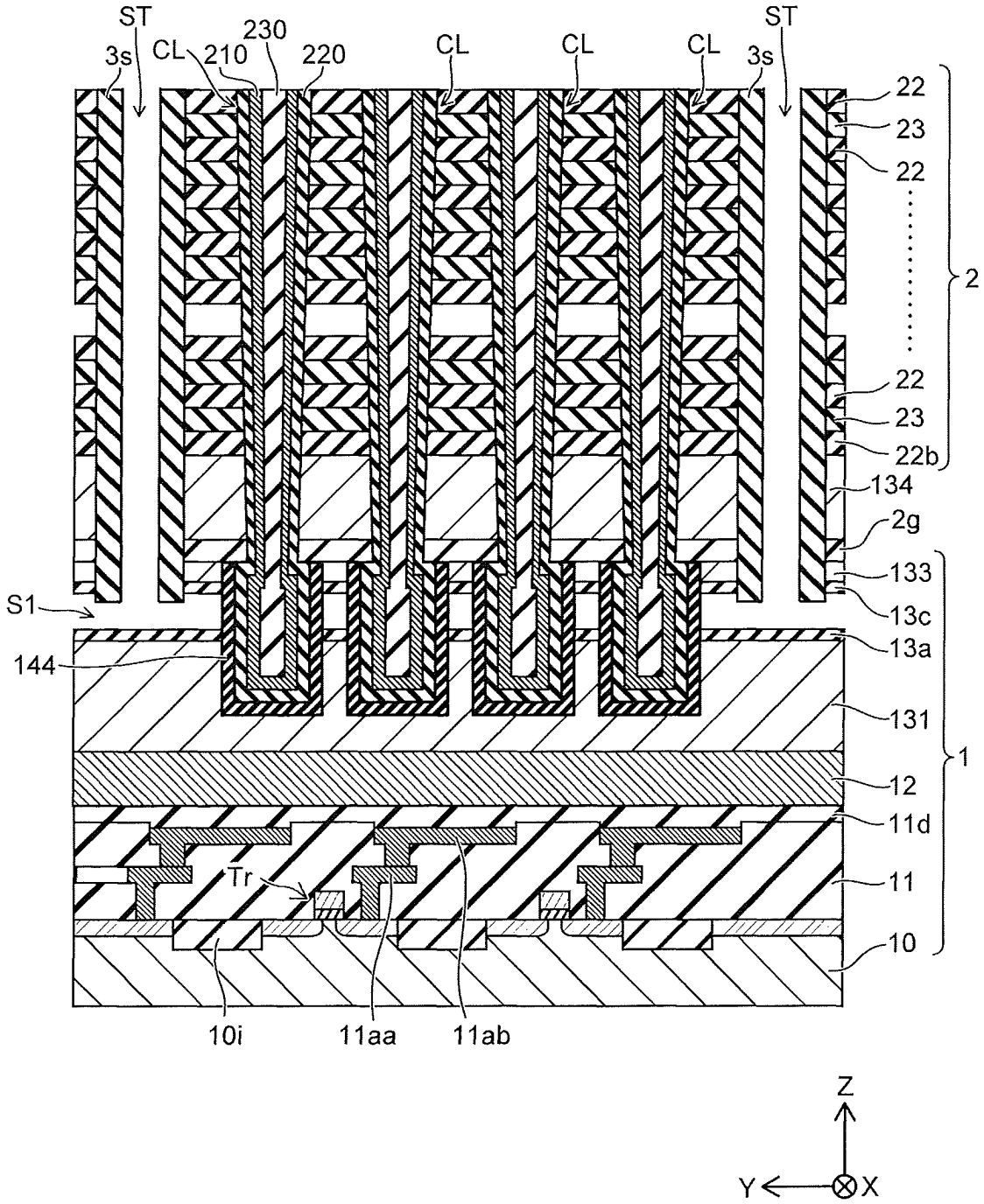
ST
3s
CL
210
230
220
CL
CL
CL
3s
ST
22
23
22
2
22
23
22b
134
2g
133
13c
13a
131
1
12
11d
11
10
S1
144
Tr
10i
11aa
11ab
Z
Y
X

FIG. 54

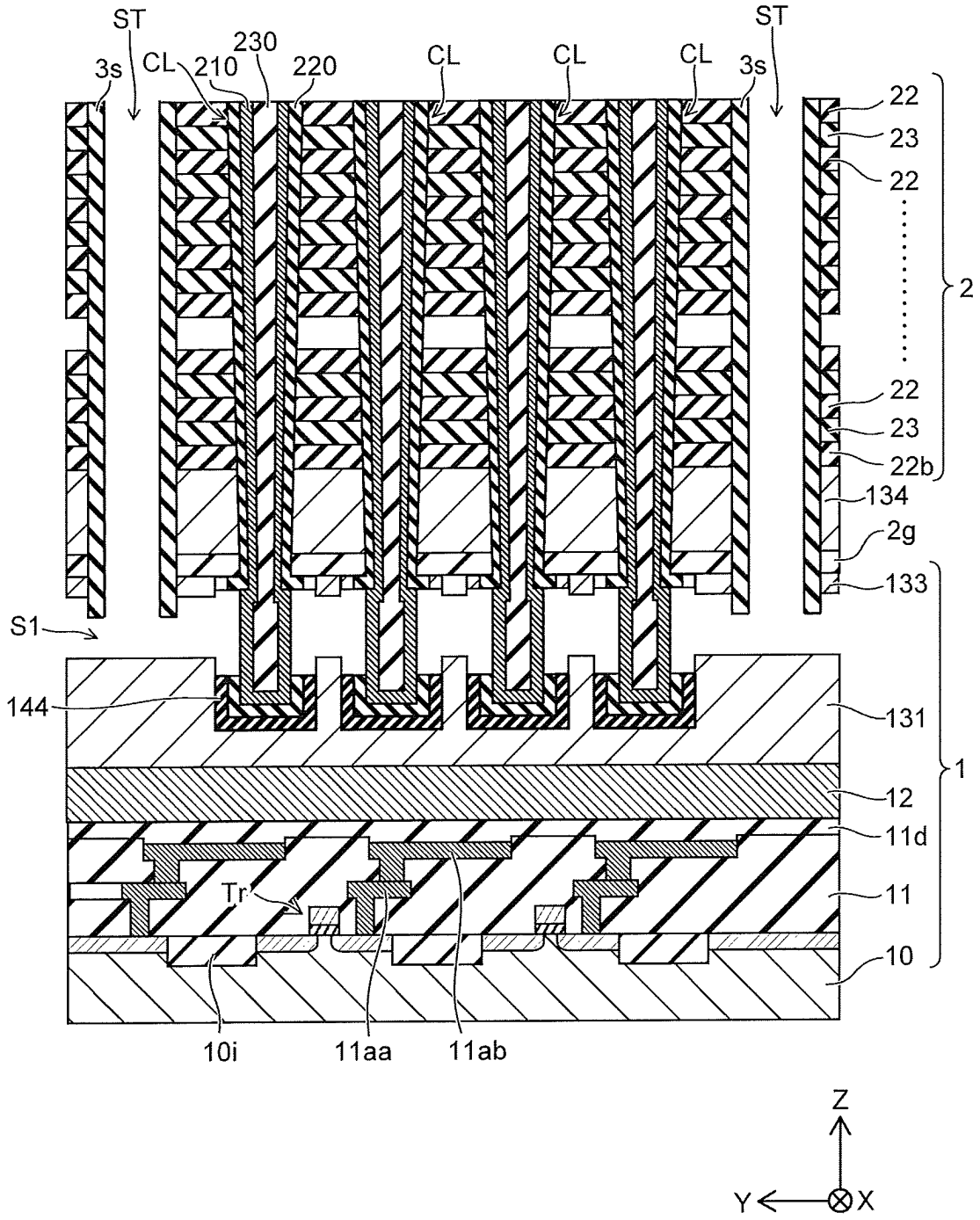
ST
ST
3s
CL
210
230
220
CL
CL
CL
3s
22
23
22
2
22
23
22b
134
2g
133
S1
144
131
1
12
11d
Tr
11
10
10i
11aa
11ab
Z
Y
X

FIG. 55

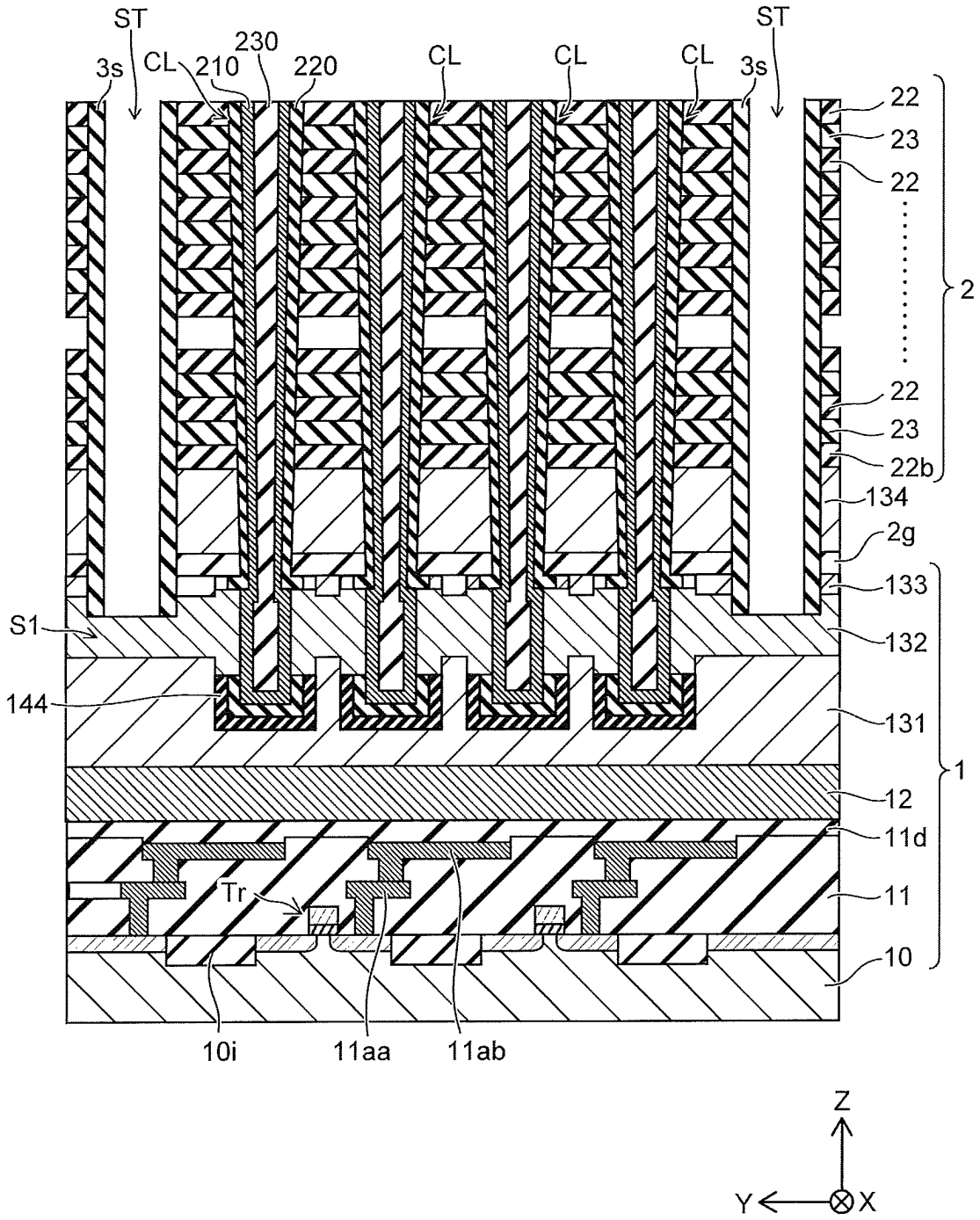
ST
ST
3s
CL
210
230
220
CL
CL
CL
3s
22
23
22
2
22
23
22b
134
2g
133
S1
132
144
131
1
12
11d
Tr
11
10
10i
11aa
11ab
Z
Y
X

FIG. 56

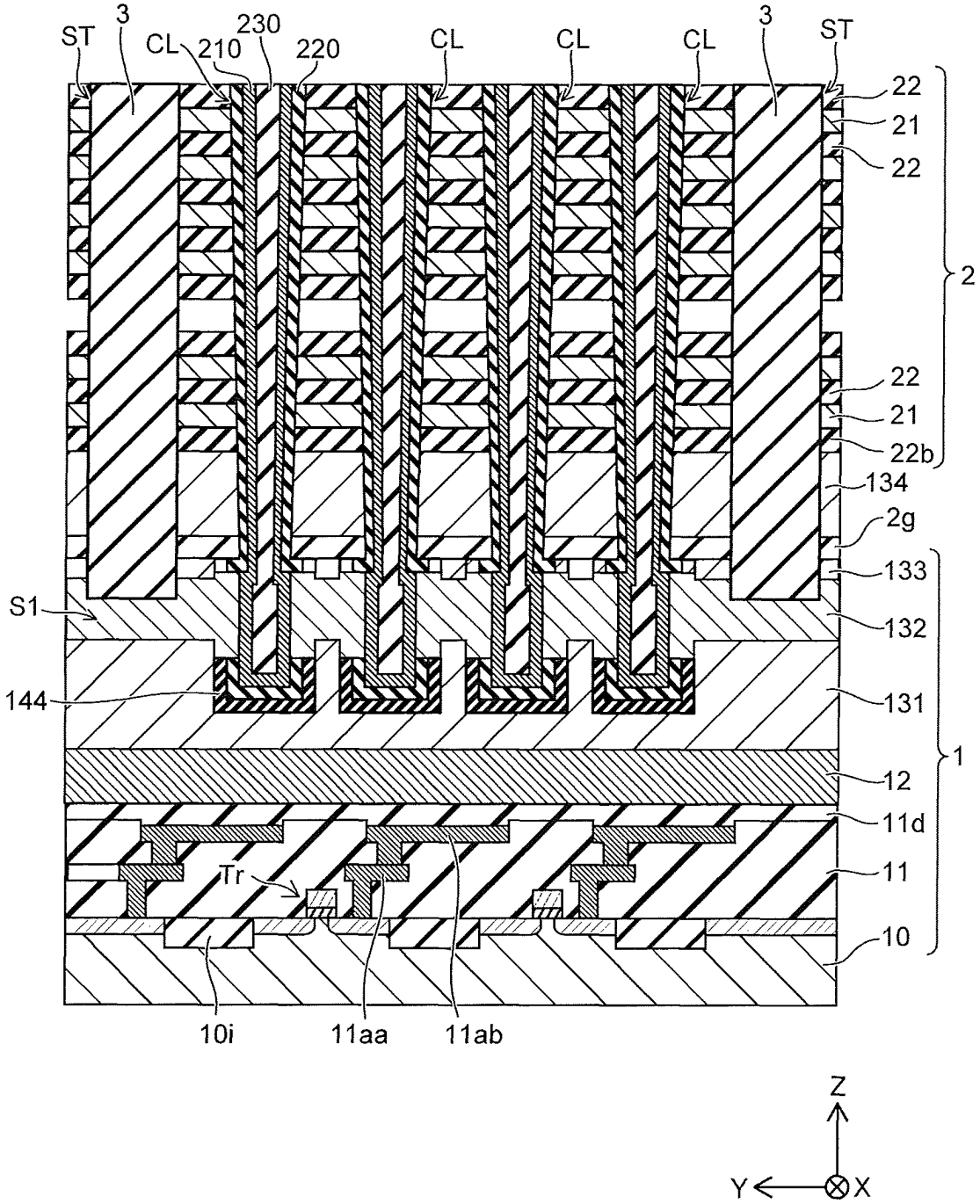
ST
3
CL
210
230
220
CL
CL
CL
3
ST
22
21
22
2
22
21
22b
134
2g
133
S1
132
144
131
1
12
11d
Tr
11
10
10i
11aa
11ab
Z
Y
X

FIG. 57B

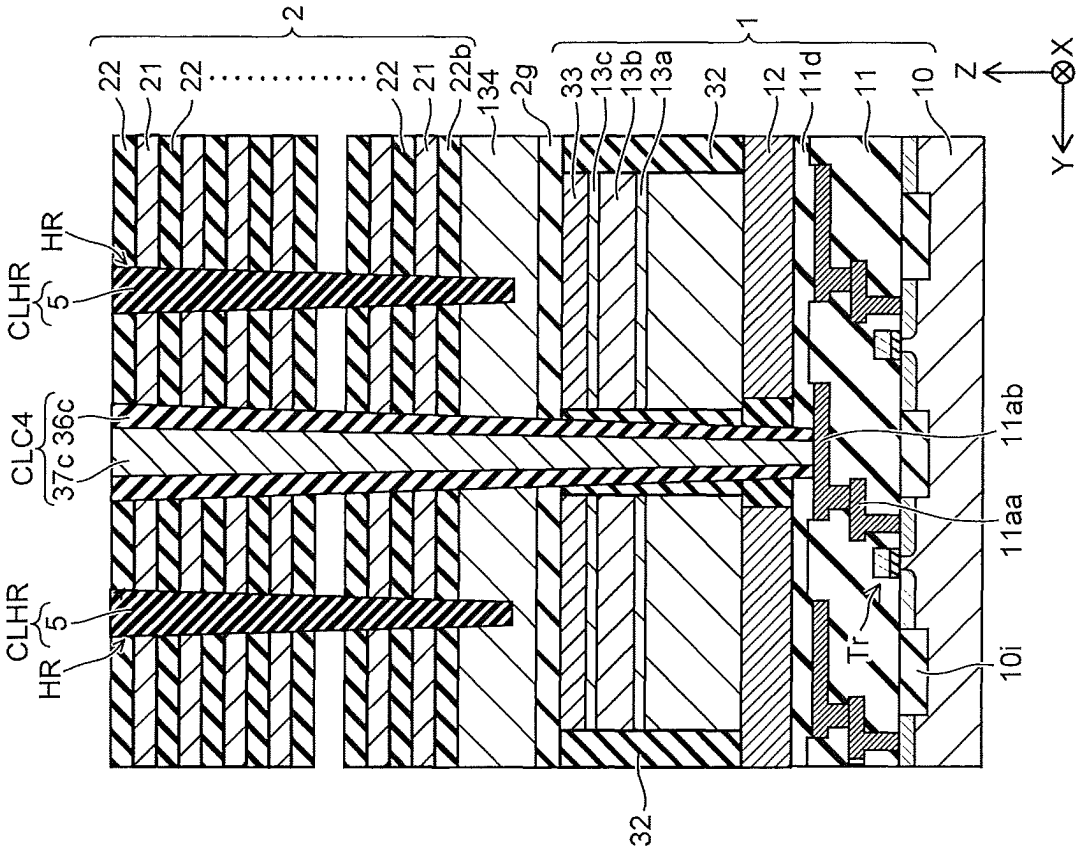

FIG. 57A

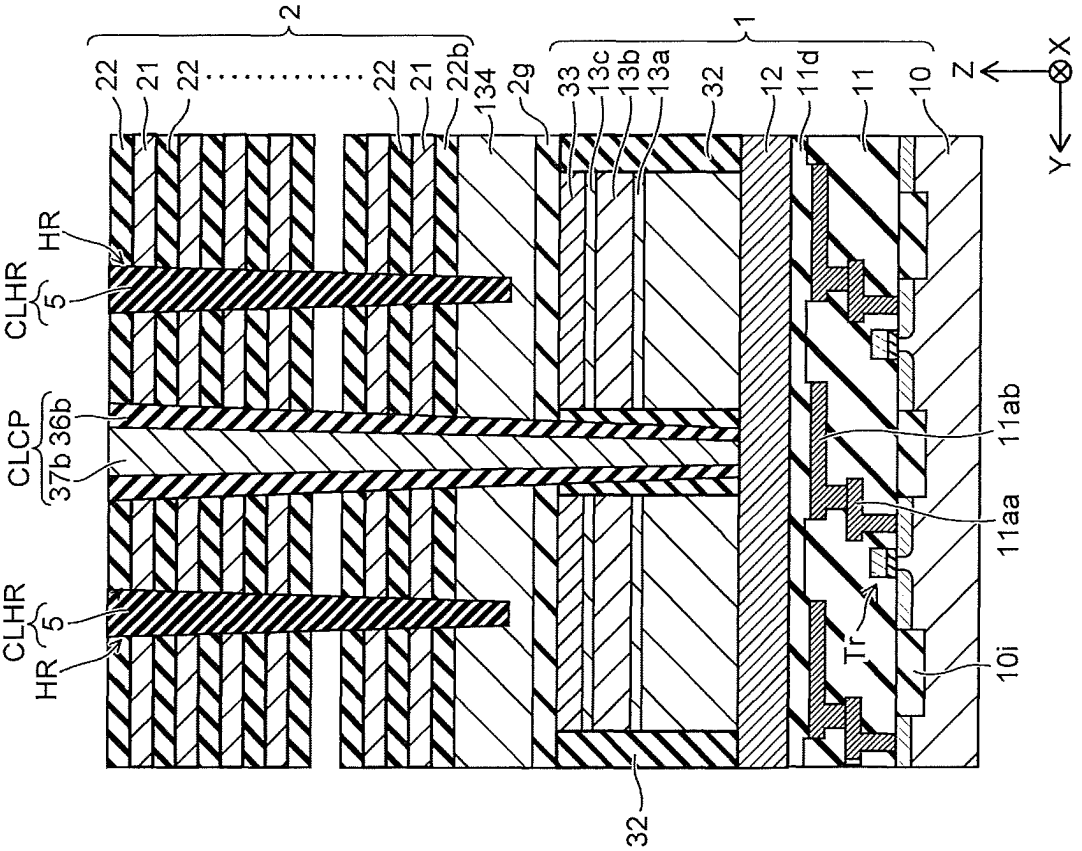

FIG. 58

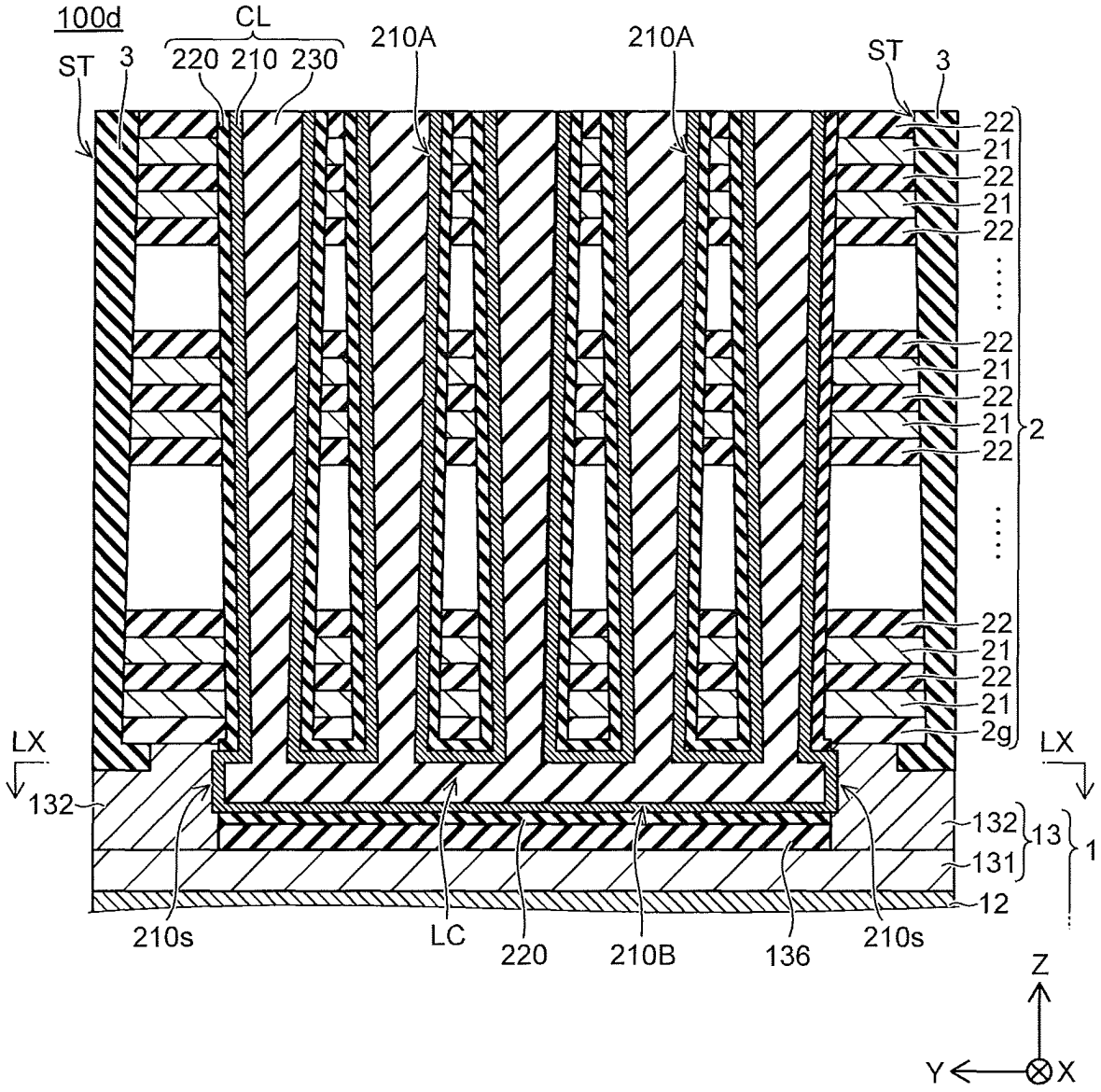
100d
CL
220 210 230
210A
210A
ST
3
ST
3
22
21
22
21
22
22
21
22
21
22
2
22
21
22
21
2g
LX
LX
132
132
13
131
1
12
210s
LC
220
210B
136
210s
Z
Y
X

FIG. 59A

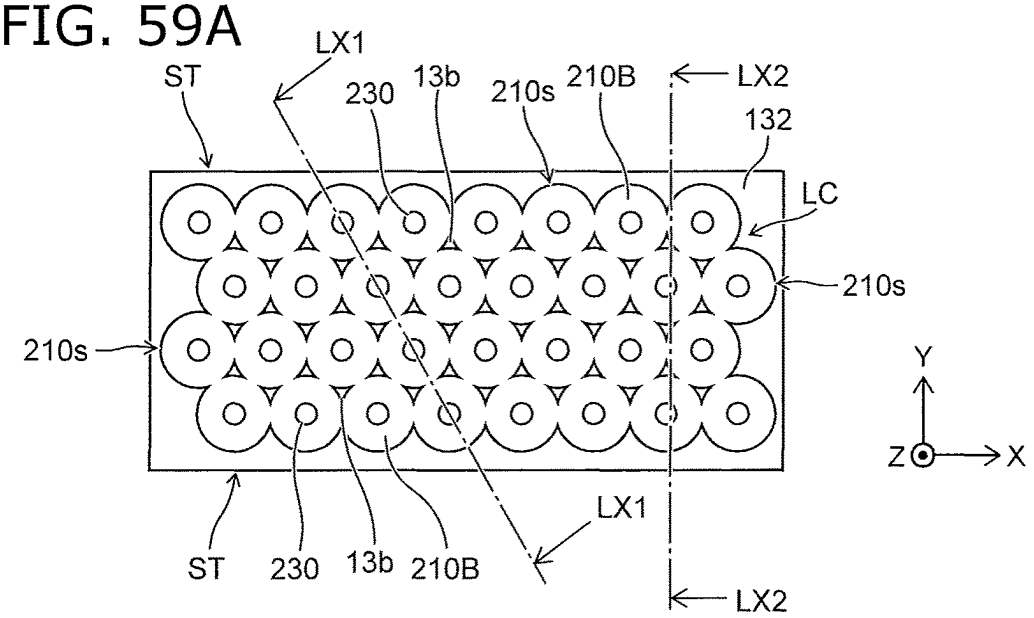

FIG. 59B

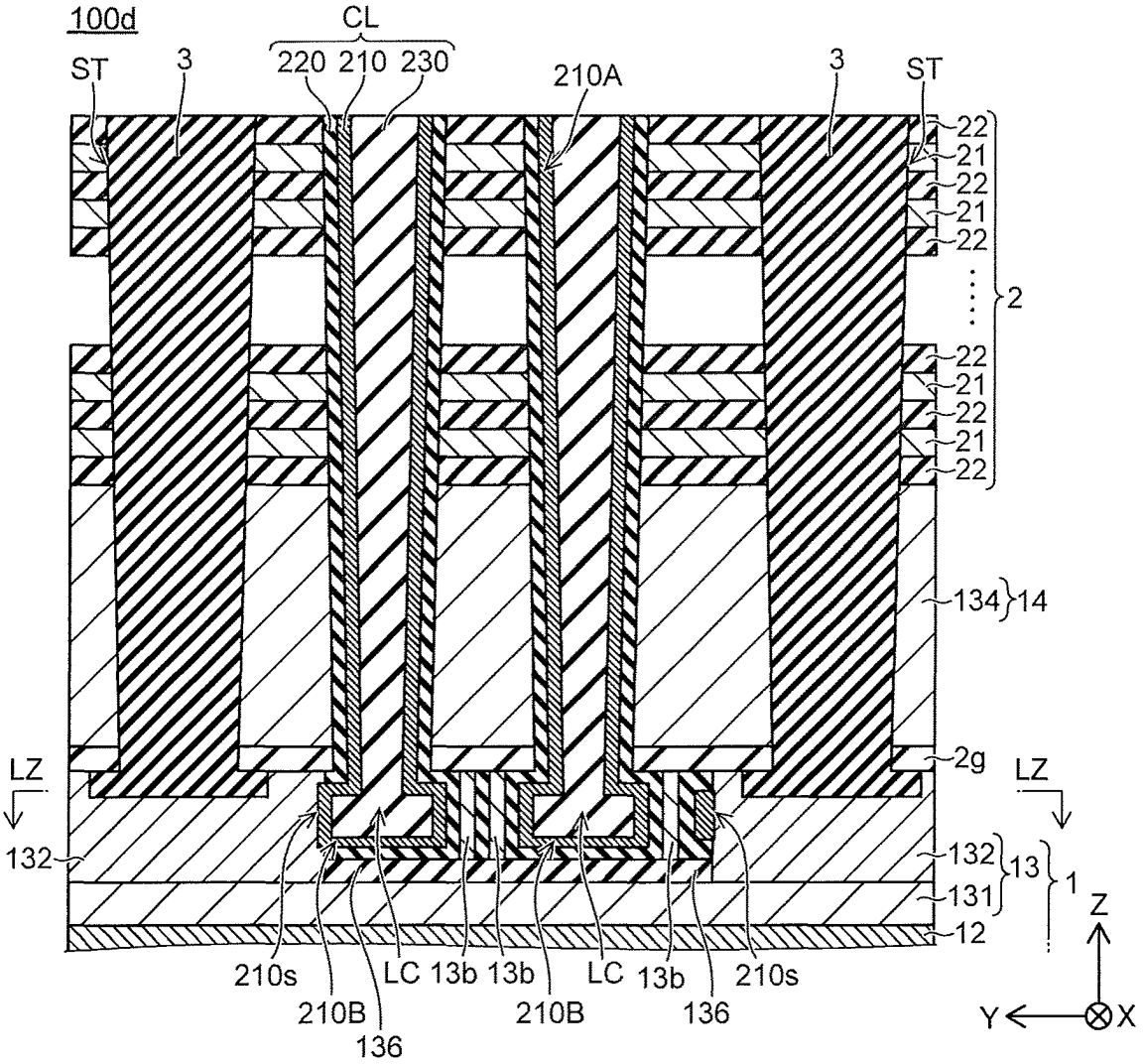

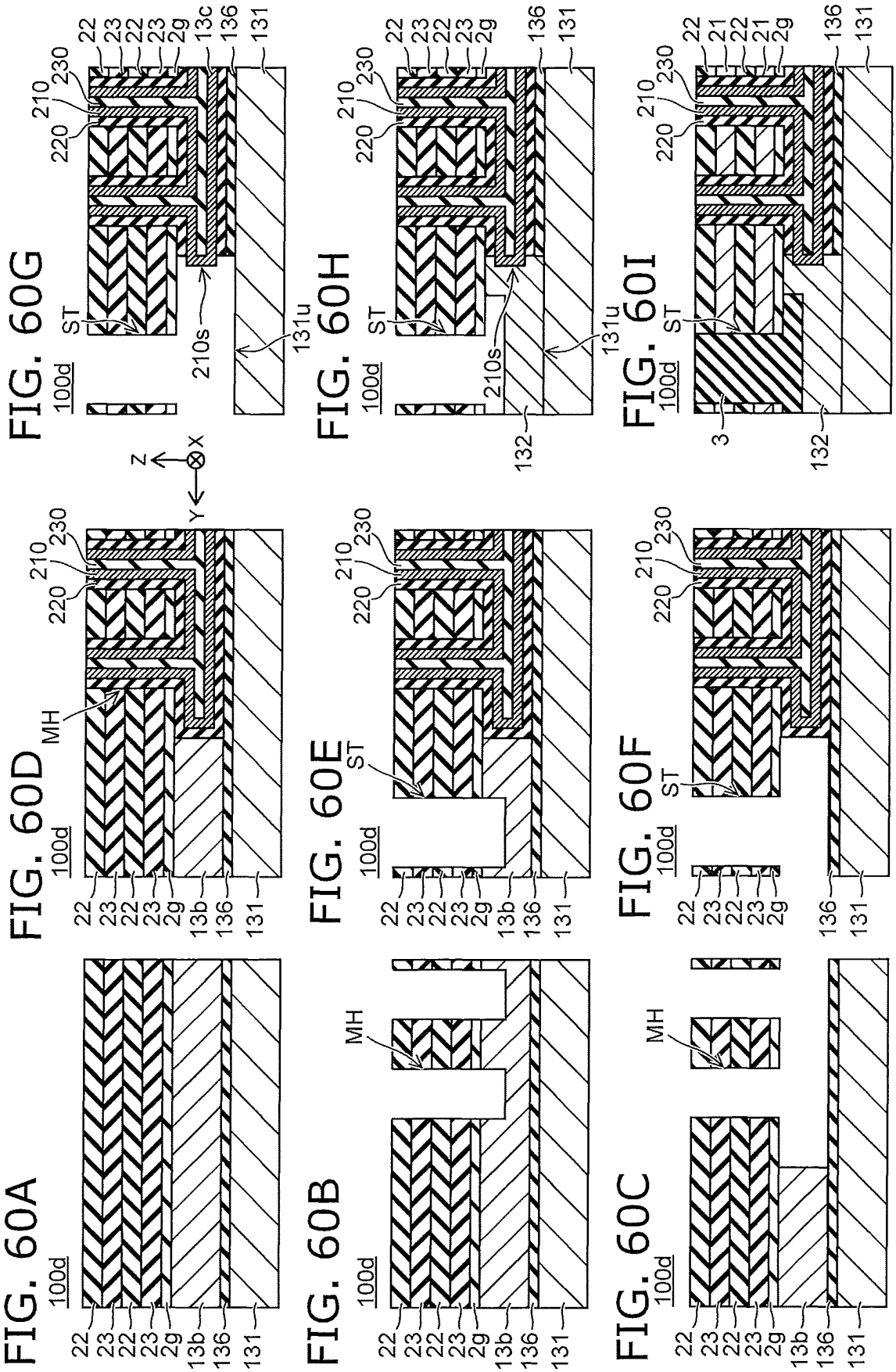

FIG. 60A

FIG. 60B

FIG. 60C

FIG. 60D

FIG. 60E

FIG. 60F

FIG. 60G

FIG. 60H

FIG. 60I

NONVOLATILE SEMICONDUCTOR MEMORY DEVICE INCLUDING A MEMORY CELL

CROSS-REFERENCE TO RELATED APPLICATIONS

This application is a continuation of and claims benefit under 35 U.S.C. § 120 to U.S. application Ser. No. 17/825,542 filed May 26, 2022, which is a continuation of and claims benefit under 35 U.S.C. § 120 to U.S. application Ser. No. 17/009,373 filed Sep. 1, 2020 (now U.S. Pat. No. 11,380,770), which is a continuation of and claims benefit under 35 U.S.C. § 120 to U.S. application Ser. No. 16/130,432 filed Sep. 13, 2018 (now U.S. Pat. No. 10,797,144), and claims the benefit of priority under 35 U.S.C. § 119 from Japanese Patent Application No. 2018-055371, filed Mar. 22, 2018, the entire contents of each of which are incorporated herein by reference.

FIELD

Embodiments relate to a semiconductor device.

BACKGROUND

Nonvolatile memory is known in which insulating films and conductive films are stacked alternately in a stacked body, and multiple memory cells are stacked in a three-dimensional structure in the height direction of the stacked body. The memory cells are provided between the stacked body and a columnar part including a semiconductor layer along the height direction of the stacked body. The memory cells are connected electrically in series between, for example, a drain-side select transistor provided in the upper region of the stacked body and, for example, a source-side select transistor provided in the lower region of the stacked body. This is called a NAND string (or a memory string). The conductive films that are stacked in the height direction of the stacked body are used as a gate (a drain-side select gate) of the drain-side select transistor, control gates (word lines) of the memory cells, and a gate (a source-side select gate) of the source-side select transistor. There are cases where transistors that are included in a memory peripheral circuit are provided under the stacked body. Recently, to form the source region of the NAND string, for example, a method has been attempted in which a sacrificial film is formed in a portion of the lower region of the stacked body; and the sacrificial film is replaced with a semiconductor layer used to form the source region. It is desirable to suppress the collapse of the stacked body when replacing the sacrificial film with the semiconductor layer.

BRIEF DESCRIPTION OF THE DRAWINGS

FIG. **1**A is a schematic perspective view illustrating a semiconductor device according to a first embodiment;

FIG. **1**B is a schematic plan view showing a stacked body;

FIGS. **2**A and **2**B are schematic cross-sectional views illustrating memory cells having a three-dimensional structure;

FIG. **3** is a schematic plan view illustrating the semiconductor device according to the first embodiment;

FIG. **4** is a schematic cross-sectional view along line IV-IV in FIG. **3**;

FIG. **5** is a schematic cross-sectional view along line V-V in FIG. **3**;

FIG. **6** is a schematic cross-sectional view illustrating an enlargement of the first columnar part, the first semiconductor part, and the second semiconductor part of the semiconductor device according to the first embodiment;

FIG. **7** is a schematic cross-sectional view illustrating an enlargement of the second columnar part, the first semiconductor part, and the second semiconductor part of the semiconductor device according to the first embodiment;

FIG. **8** is a schematic cross-sectional view illustrating an enlargement of the first columnar part and the first semiconductor part of a semiconductor device according to a first variation of the first embodiment;

FIG. **9** is a schematic cross-sectional view illustrating an enlargement of the second columnar part and the first semiconductor part of the semiconductor device according to the first variation of the first embodiment;

FIG. **10** is a schematic plan view illustrating the semiconductor device according to the first embodiment;

FIGS. **11**A to **32**D are schematic cross-sectional views illustrating sequential processes, which show a method for manufacturing the semiconductor device according to the first embodiment;

FIG. **33** is a schematic cross-sectional view illustrating an enlargement of the first columnar part, the first semiconductor part, and the second semiconductor part of a semiconductor device according to a second embodiment;

FIG. **34** is a schematic cross-sectional view illustrating an enlargement of the second columnar part, the first semiconductor part, and the second semiconductor part of the semiconductor device according to the second embodiment;

FIGS. **35**A to **39**D are schematic cross-sectional views illustrating sequential processes, which show a method for manufacturing the semiconductor device according to the second embodiment;

FIG. **40** is a schematic cross-sectional view illustrating an enlargement of the first columnar part, the first semiconductor part, and the second semiconductor part of a semiconductor device according to the third embodiment;

FIG. **41** is a schematic plan view illustrating the semiconductor device according to the third embodiment;

FIGS. **42**A to **48**D and FIGS. **49** to **56** are schematic cross-sectional views illustrating sequential processes, which show a method for manufacturing the semiconductor device according to the third embodiment;

FIGS. **57**A and **57**B are schematic cross-sectional views illustrating a tap region of the semiconductor device according to the third embodiment;

FIG. **58** is a schematic cross-sectional view illustrating a semiconductor device according to a fourth embodiment;

FIG. **59**A is a schematic view showing a cross section along line LX-LX in FIG. **58**;

FIG. **59**B is a schematic cross-sectional view along line LX**2**-LX**2** in FIG. **59**A; and

FIG. **60**A to FIG. **60**I are schematic cross-sectional views illustrating sequential processes, which show a method for manufacturing the semiconductor device according to the fourth embodiment.

DETAILED DESCRIPTION

According to one embodiment, a semiconductor device includes a base body, a stacked body and a first columnar part. The base body includes a substrate, a first insulating film provided on the substrate, a first conductive film provided on the first insulating film, and a first semiconductor part provided on the first conductive film. The stacked body is provided above the base body. The stacked body includes

a plurality of conductive layers and a plurality of insulating layers. The conductive layers and the insulating layers are stacked alternately. The first columnar part is provided inside the stacked body and inside the first semiconductor part. The first columnar part includes a semiconductor body and a memory film. The semiconductor body extends in a stacking direction of the stacked body, and is electrically connected to the first semiconductor part. The memory film includes a charge trapping portion between the semiconductor body and one of conductive layers. The first columnar part has a first diameter in a first direction crossing the stacking direction inside the first semiconductor part and a second diameter in the first direction inside the stacked body. The first diameter is larger than the second diameter.

Hereinbelow, the embodiments are described with reference to the drawings.

The drawings are illustrated schematically or conceptually, and the relationship between a thickness and a width of each element illustrated, and the size ratio between the elements are not necessarily same as the actual ones. The same element may be illustrated in the drawings so as to have the size and ratio different from each other. In the specification and the drawings, the same element is denoted with the same symbol as the one described in the previous drawing, and is not precisely described or omitted appropriately.

First Embodiment

(Semiconductor Device)

FIG. **1**A is a schematic perspective view illustrating a semiconductor device **100***a* according to a first embodiment. FIG. **1**B is a schematic plan view showing a stacked body **2**, In the specification, the stacking direction of the stacked body **2** is taken as a Z-axis direction. One direction crossing, e.g., orthogonal to, the Z-axis direction is taken as a first direction. In the specification, the first direction is, for example, a Y-axis direction. One direction crossing, e.g., orthogonal to, the Z- and Y-axis directions is taken as a second direction. The second direction is, for example, an X-axis direction. FIG. **2**A and FIG. **2**B each are schematic cross-sectional views illustrating memory cells having a three-dimensional structure. FIG. **3** is a schematic plan view illustrating the semiconductor device **100***a* according to the first embodiment. FIG. **4** is a schematic cross-sectional view along line IV-IV in FIG. **3**, FIG. is a schematic cross-sectional view along line V-V in FIG. **3**.

As shown in FIG. **1**A to FIG. **5**, the semiconductor device **100***a* according to the first embodiment is nonvolatile memory device including memory cells having a three-dimensional structure.

The semiconductor device **100***a* includes a base body **1**, the stacked body **2**, a plate portion **3**, multiple first columnar parts CL, and multiple second columnar parts CLHR.

The base body **1** includes a substrate **10**, a first insulating film **11**, a first conductive film **12**, and a first semiconductor part **13**. The first insulating film **11** is provided on the substrate **10**. The first conductive film **12** is provided on the first insulating film **11**. The first semiconductor part **13** is provided on the first conductive film **12**. The substrate **10** is a semiconductor substrate, e.g., a silicon substrate. The conductivity type of the silicon (Si) is, for example, a p-type. For example, an element separation region **10***i* is provided in the surface region of the substrate **10**. The element separation region **10***i* is, for example, an insulating region including silicon oxide and partitions an active area AA in the surface region of the substrate **10**. Source and drain regions of a transistor Tr are provided in the active area AA. The transistor Tr is included in the peripheral circuit of the nonvolatile memory. The first insulating film **11** includes, for example, silicon oxide (SiO_2) and insulates the transistor Tr. An interconnect **11***a* is provided inside the first insulating film **11**. The interconnect **11***a* is an interconnect that is electrically connected to the transistor Tr. The first conductive film **12** includes a conductive metal, e.g., tungsten (W). The first semiconductor part **13** includes, for example, silicon. The conductivity type of the silicon is, for example, an n-type. A portion of the first semiconductor part **13** may include undoped silicon.

The stacked body **2** is positioned in the Z-axis direction with respect to the first semiconductor part **13**. The stacked body **2** alternately includes multiple conductive layers **21** and multiple insulating layers **22** along the Z-axis direction. The conductive layers **21** include conductive metal, e.g., tungsten. The insulating layers **22** include, for example, silicon oxide. The insulating layers **22** insulate the conductive layers **21** from each other. The number of stacks of the conductive layers **21** and the number of stacks of the insulating layers **22** are arbitrary. The insulating layers **22** may be, for example, gaps. For example, an insulating film **2***g* is provided between the stacked body **2** and the first semiconductor part **13**. The insulating film **2***g* includes, for example, silicon oxide (SiO_2). As described below, the insulating film **2***g* may include a high dielectric having a higher relative dielectric constant than silicon oxide. The high dielectric is, for example, metal oxide.

The conductive layers **21** include at least one source-side select gate SGS, multiple word lines WL, and at least one drain-side select gate SGD, The source-side select gate SGS is a gate electrode of a source-side select transistor STS. The word lines WL are gate electrodes of memory cells MC. The drain-side select gate SGD is a gate electrode of a drain-side select transistor STD. The source-side select gate SGS is provided in the lower region of the stacked body **2**. The drain-side select gate SGD is provided in the upper region of the stacked body **2**. The lower region refers to the region of the stacked body **2** on the side proximal to the base body **1**; and the upper region refers to the region of the stacked body **2** on the side distal to the base body **1**. The word lines WL are provided between the source-side select gate SGS and the drain-side select gate SGD.

Among the multiple insulating layers **22**, the thickness in the Z-axis direction of the insulating layer **22** that insulates the source-side select gate SGS and the word line WL may be, for example, thicker than the thickness in the Z-axis direction of the insulating layer **22** insulating the word line WL and the word line WL. A cover insulating film may be further provided on the insulating layer **22** of the uppermost layer most distal to the base body **1**. The cover insulating film includes, for example, silicon oxide.

The semiconductor device **100***a* includes the multiple memory cells MC connected in series between the source-side select transistor STS and the drain-side select transistor STD. The structure in which the source-side select transistor STS, the memory cells MC, and the drain-side select transistor STD are connected in series is called a "memory string" or a "NAND string." For example, the memory string is connected to a bit line BL via a contact Cb. The bit line BL is provided above the stacked body **2** and extends in the Y-axis direction.

Multiple deep slits ST and multiple shallow slits SHE are provided inside the stacked body **2**. The deep slits ST extend in the X-axis direction, are provided inside the stacked body **2**, and extend through the stacked body **2** from the upper end

of the stacked body **2** to the base body **1**. The plate portions **3** are provided inside the deep slits ST (see FIG. **1**B). The plate portions **3** include, for example, at least a first insulator. The first insulator is, for example, silicon oxide. The plate portions **3** may include a conductor electrically connected to the first semiconductor part **13** while being electrically insulated from the stacked body **2** by the first insulator. The shallow slits SHE extend in the X-axis direction and are provided partway through the stacked body **2** from the upper end of the stacked body **2**. For example, a second insulator **4** is provided inside the shallow slits SHE (see FIG. **1**B). The second insulator **4** is, for example, silicon oxide.

The stacked body **2** includes a staircase portion **2***s* and a memory cell array **2***m* (see FIG. **1**B), The staircase portion **2***s* is provided in the edge portion of the stacked body **2**. The memory cell array **2***m* is interposed between the staircase portions **2***s* or is surrounded with the staircase portion **2***s*, The deep slits ST are provided from the staircase portion **2***s* of one end of the stacked body **2** through the memory cell array **2***m* to the staircase portion **2***s* of the other end of the stacked body **2**. The shallow slits SHE are provided in at least the memory cell array **2***m*.

The memory cell array **2***m* includes a cell region (Cell) and a tap region (Tap). The staircase portion **2***s* includes a staircase region (Staircase) as shown in FIG. **3**. For example, the tap region is provided between the cell region and the staircase region. Although not illustrated in FIG. **3**, the tap region may be provided between the cell regions. The staircase region is a region where multiple interconnects **37***a* are provided. The tap region is a region where interconnects **37***b* and **37***c* are provided. For example, the interconnects **37***a* to **37***c* each extend in the Z-axis direction. For example, the interconnects **37***a* are electrically connected respectively to the conductive layers **21**. For example, the interconnects **37***b* are electrically connected to the first conductive film **12**. For example, the interconnects **37***c* are electrically connected to the interconnects **11***a*.

The portion of the stacked body **2** interposed between two plate portions **3** is called a block (BLOCK). For example, the block is the minimum unit of the data erase. The second insulators **4** are provided inside the block. The stacked body **2** that is between the plate portion **3** and the second insulator **4** is called a finger. The drain-side select gate SGD is subdivided every finger. Therefore, one finger inside a block can be set to the selected state by the drain-side select gate SGD when programming and reading data.

The multiple first columnar parts CL are provided respectively inside memory holes MH provided inside the stacked body **2**. The memory holes MH extend through the stacked body **2** from the upper end of the stacked body **2** along the Z-axis direction and are provided inside the stacked body **2** and inside the first semiconductor part **13** (see FIG. **4**). The multiple first columnar parts CL each include a semiconductor body **210**, a memory film **220**, and a core layer **230**. The semiconductor body **210** is electrically connected to the first semiconductor part **13**. The memory film **220** includes a charge trapping portion between the semiconductor body **210** and the conductive layer **21**. One bit line BL is connected commonly to one of the multiple first columnar parts CL selected from each of the fingers via the contacts Cb. The first columnar parts CL each are provided in, for example, the cell region (Cell) as shown in FIG. **3**.

As shown in FIG. **2**A and FIG. **2**B, the configuration of the memory hole MH in the X-Y plane is, for example, a circle or an ellipse. A blocking insulating film **21***a* that is included in a portion of the memory film **220** may be provided between the conductive layer **21** and the insulating layers **22**. The blocking insulating film **21***a* is, for example, a silicon oxide film or a metal oxide film. One example of the metal oxide is aluminum oxide. A barrier film **21***b* may be provided between the conductive layer **21** and the insulating layers **22** and between the conductive layer **21** and the memory film **220**. For example, in the case where the conductive layer **21** is tungsten, for example, a stacked structure film of titanium nitride and titanium is selected as the barrier film **21***b*. The blocking insulating film **21***a* suppresses back-tunneling of charge from the conductive layer **21** to the memory film **220** side. The barrier film **21***b* improves the adhesion between the conductive layer **21** and the blocking insulating film **21***a*.

The configuration of the semiconductor body **210** is, for example, a tubular configuration having a bottom. The semiconductor body **210** includes, for example, silicon. The silicon is, for example, polysilicon made of amorphous silicon that is crystallized. The semiconductor body **210** is, for example, undoped silicon. The semiconductor body **210** may be p-type silicon. The semiconductor body **210** is used to form the channels of the drain-side select transistor STD, the memory cells MC, and the source-side select transistor STS.

A portion of the memory film **220** other than the blocking insulating film **21***a* is provided between the semiconductor body **210** and the inner wall of the memory hole MH. The configuration of the memory film **220** is, for example, a tubular configuration. The multiple memory cells MC are stacked in the Z-axis direction and include memory regions between the semiconductor body **210** and the conductive layers **21** used to form the word lines WL. The memory film **220** includes, for example, a cover insulating film **221**, a charge trapping film **222**, and a tunneling insulating film **223**. The semiconductor body **210**, the charge trapping film **222**, and the tunneling insulating film **223** each extend in the Z-axis direction.

The cover insulating film **221** is provided between the insulating layer **22** and the charge trapping film **222**. The cover insulating film **221** includes, for example, silicon oxide. The cover insulating film **221** provides protection so that the charge trapping film **222** is not etched when replacing sacrificial films (not illustrated) with the conductive layers **21** (a replacement process). The cover insulating film **221** may be removed from between the conductive layer **21** and the memory film **220** in the replacement process. In such a case, as shown in FIG. **2**A and FIG. **2**B, for example, the blocking insulating film **21***a* is provided between the conductive layer **21** and the charge trapping film **222**. The cover insulating film **221** may not be provided in the case where the replacement process is not utilized to form the conductive layers **21**.

The charge trapping film **222** is provided between the blocking insulating film **21***a* and the tunneling insulating film **223** and between the cover insulating film **221** and the tunneling insulating film **223**. For example, the charge trapping film **222** includes silicon nitride and has trap sites that trap charge inside a film. The portion of the charge trapping film **222** is included in the memory region of the memory cell MC as a charge trapping portion. The portion of the charge trapping film **222** is interposed between the semiconductor body **210** and the conductive layer **21** that is used to form the word line WL. The threshold voltage of the memory cell MC changes according to the existence or absence of the charge inside the charge trapping portion or the amount of the charge trapped inside the charge trapping portion. Thereby, the memory cell MC stores information.

The tunneling insulating film **223** is provided between the semiconductor body **210** and the charge trapping film **222**. The tunneling insulating film **223** includes, for example, silicon oxide, or silicon oxide and silicon nitride. The tunneling insulating film **223** is a potential barrier between the semiconductor body **210** and the charge trapping film **222**. For example, transmission (tunneling) of electrons and holes through the potential barrier of the tunneling insulating film **223** occur respectively when the electrons are injected from the semiconductor body **210** into the charge trapping portion (a program operation) and when the holes are injected from the semiconductor body **210** into the charge trapping portion (an erase operation).

The core layer **230** fills the interior space of the semiconductor body **210** having the tubular configuration. The configuration of the core layer **230** is, for example, a columnar configuration. The core layer **230** includes, for example, silicon oxide and is insulative.

Each of the multiple second columnar parts CLHR is provided inside a hole HR provided inside the stacked body **2**. The hole HR extends through the stacked body **2** from the upper end of the stacked body **2** along the Z-axis direction and is provided inside the stacked body **2** and inside the first semiconductor part **13** (see FIG. **5**). The second columnar parts CLHR each include at least a third insulator **5**. The third insulator **5** is, for example, silicon oxide. The second columnar parts CLHR each may have the same structure as the first columnar part CL. For example, the second columnar parts CLHR each are provided in the staircase region (Staircase) and the tap region (Tap) as shown in FIG. **3**. The second columnar parts CLHR function as support members for maintaining the gaps formed in the staircase region and the tap region when replacing the sacrificial films (not illustrated) with the conductive layers **21** (the replacement process).

The first semiconductor part **13** includes, for example, a first semiconductor layer **131** of the n-type, a second semiconductor layer **132** of the n-type, and an n-type or undoped third semiconductor layer **133**, The first semiconductor layer **131** contacts the first conductive film **12**. The second semiconductor layer **132** contacts the first semiconductor layer **131** and the semiconductor body **210**. For example, the second semiconductor layer **132** extends at the portion where the memory film **220** is removed, and contacts the semiconductor body **210**. The second semiconductor layer **132** is provided to surround the semiconductor body **210** in the X-Y plane. The third semiconductor layer **133** contacts the second semiconductor layer **132**.

The semiconductor device **100***a* further includes a second semiconductor part **14**. The second semiconductor part **14** is positioned between the stacked body **2** and the first semiconductor part **13**. The second semiconductor part **14** includes a fourth semiconductor layer **134**. The fourth semiconductor layer **134** is provided between the insulating film **2***g* and an insulating layer **22***b* of the insulating layers **22** most proximal to the first semiconductor part **13**. The conductivity type of the fourth semiconductor layer **134** is, for example, the n-type. For example, the fourth semiconductor layer **134** functions as the source-side select gate SGS.

FIG. **6** is a schematic cross-sectional view illustrating an enlargement of the first columnar part CL, the first semiconductor part **13**, and the second semiconductor part **14** of the semiconductor device **100***a* according to the first embodiment. The cross section shown in FIG. **6** corresponds to the cross section shown in FIG. **4**.

As shown in FIG. **6**, a first diameter d**1** of the first columnar part CL of the semiconductor device **100***a* is larger than a second diameter d**2** of the first columnar part CL of the semiconductor device **100***a*. The first diameter d**1** is the diameter of the first columnar part CL inside the first semiconductor part **13**; and the second diameter d**2** is the diameter of the first columnar part CL inside the stacked body **2**.

The first diameter d**1** is, for example, a diameter of the first columnar part CL at a portion surrounded with the first semiconductor part **13** other than a contact portion **210***c* where the second semiconductor layer **132** contacts the semiconductor body **210**. The first diameter d**1** may be, for example, a diameter of the first columnar part CL at a portion surrounded with the third semiconductor layer **133**. The second diameter d**2** is a diameter of the first columnar part CL at a portion surrounded with one insulating layer **22**. The one insulating layer **22** is, for example, the insulating layer **22***b* most proximal to the first semiconductor part **13**.

In the semiconductor device **100***a*, a third diameter d**3** of the first columnar part CL is larger than the second diameter d**2**. The third diameter d**3** is, for example, the diameter of the first columnar part CL inside the second semiconductor part **14**. The third diameter d**3** may be, for example, the diameter of a location of the first columnar part CL surrounded with the fourth semiconductor layer **134**.

According to the semiconductor device **100***a*, it is possible to suppress the collapse of the stacked body **2**, e.g., the collapse of the stacked body **2** when manufacturing. For example, a portion of the first columnar part CL is used as a post maintaining a first space S**1** formed when replacing a first intermediate film **13***a*, a first sacrificial film **13***b*, and a second intermediate film **13***c* with the second semiconductor layer **132** in the processes shown in FIG. **23**A to FIG. **27**D. Therefore, by increasing the diameter of the portion of the first columnar part CL positioned inside the first semiconductor part **13**, it is possible to stably support the stacked body **2** positioned above the first space S**1**; and the collapse of the stacked body **2** can be avoided.

For example, etching of the memory film **220** is performed in the interior of the first space S**1** to cause the second semiconductor layer **132** to contact the semiconductor body **210**. Thus, there may be a case where the first columnar part CL that is exposed inside the first space S**1** gets slim and no longer can support the stacked body **2**. As a result, the collapsing of the stacked body **2** may increase in the cell region (Cell).

It is considered that such a circumstance becomes more pronounced as the first columnar part CL is downscaled. For example, when the first columnar part CL is downscaled, the case also is imagined where the etching progresses from the semiconductor body **210** into the core layer **230** at the contact location **210***c*. In such a case, the first columnar part CL gets slimmer.

In contrast, the portion of the first columnar part CL positioned inside the first semiconductor part **13** is set to be wider in the semiconductor device **100***a*. For example, the diameter (the first diameter d**1**) of the first columnar part CL inside the first semiconductor part **13** is larger than the diameter (the second diameter d**2**) of the first columnar part CL inside the stacked body **2**. Thereby, even when the etching of the first columnar part CL progresses at the contact portion **210***c*, the first columnar part CL remains inside the first semiconductor part **13** with the diameter (the first diameter d**1**) enough to suppress the collapse. Accordingly, the collapse of the stacked body **2** can be suppressed. According to the semiconductor device **100***a* in which the

collapse of the stacked body **2** can be suppressed, for example, an advantage can be obtained in that the semiconductor device **100***a* is advantageous for the improvement of the manufacturing yield and the advancement of the downscaling.

FIG. **7** is a schematic cross-sectional view illustrating an enlargement of the second columnar part CLHR, the first semiconductor part **13**, and the second semiconductor part **14** of the semiconductor device **100***a* according to the first embodiment. The cross section shown in FIG. **7** corresponds to the cross section shown in FIG. **5**.

According to the semiconductor device **100***a* as shown in FIG. **7**, a fourth diameter d**4** of the second columnar part CLHR is set to be larger than a fifth diameter d**5** of the second columnar part CLHR. The fourth diameter d**4** is the diameter of the second columnar part CLHR inside the first semiconductor part **13**; and the fifth diameter d**5** is the diameter of the second columnar part CLHR inside the stacked body **2**.

The second columnar part CLHR includes a recess portion **5***r* inside the first semiconductor part **13**. The third insulator **5** is etched along the X-Y planar direction at the recess portion **5***r*, The second columnar part CLHR is narrower at the recess portion Sr. For example, the recess portion **5***r* corresponds to the contact portion **210***c* where the memory film **220** is removed.

The fourth diameter d**4** is, for example, a diameter of the second columnar part CLHR at a portion surrounded with the first semiconductor part **13** other than the recess portion **5***r*. The fourth diameter d**4** may be, for example, a diameter of the second columnar part CLHR at a portion surrounded with the third semiconductor layer **133**, The fifth diameter d**5** is a diameter of the second columnar part CLHR at a portion surrounded with one insulating layer **22**. The one insulating layer **22** is, for example, the insulating layer **22***b* most proximal to the first semiconductor part **13**.

Further, in the semiconductor device **100***a*, a sixth diameter d**6** of the second columnar part CLHR is larger than the fifth diameter d**5**. The sixth diameter d**6** is, for example, a diameter of the second columnar part CLHR inside the second semiconductor part **14**. The sixth diameter d**6** may be, for example, a diameter of the second columnar part CLHR at a portion surrounded with the fourth semiconductor layer **134**.

Thus, in the second columnar part CLHR according to the semiconductor device **100***a*, the diameter (the fourth diameter d**4**) of the second columnar part CLHR inside the first semiconductor part **13** is set to be larger than the diameter (the fifth diameter d**5**) of the second columnar part CLHR inside the stacked body **2**.

The recess portion **5***r* is formed in the second columnar part CLHR when the etching of the third insulator **5** progresses in the etching of the memory film **220** at the contact portion **210***c*. Therefore, the diameter of the second columnar part CLHR becomes narrow inside the first semiconductor part **13**. Similarly to the first columnar part CL, the second columnar part CLHR can no longer support the stacked body **2**; and there is a possibility that the stacked body **2** may collapse in the tap region (Tap) and the staircase region (Staircase).

Such a circumstance also can be suppressed further in the semiconductor device **100***a* by setting the diameter (the fourth diameter d**4**) of the second columnar part CLHR inside the first semiconductor part **13** to be larger than the diameter (the fifth diameter d**5**) of the second columnar part CLHR inside the stacked body **2**.

It is possible to set the fourth diameter d**4** to be larger than the fifth diameter d**5** and set the sixth diameter d**6** to be larger than the fifth diameter d**5**, not depending on the first columnar part CL.

Similarly, it is possible to set the first diameter d**1** to be larger than the second diameter d**2** and set the third diameter d**3** to be larger than the second diameter d**2**, not depending on the second columnar part CLHR.

In the semiconductor device **100***a* as shown in FIG. **6**, the first diameter d**1** is larger than a seventh diameter d**7**. The third diameter d**3** also is larger than the seventh diameter d**7**. The seventh diameter d**7** is a diameter of the first columnar part CL at a portion surrounded with the insulating film **2***g*.

With respect to the seventh diameter d**7**, the first diameter d**1** and the third diameter d**3** are larger not in a linear shape but in a step shape. For example, this structure is formed when etching (recessing) the first and second semiconductor parts **13** and **14** from the memory hole MH to cause the first diameter d**1** and the third diameter d**3** to be larger than the second diameter d**2**. For example, an etching rate difference occurs in the case where the first and second semiconductor parts **13** and **14** each are silicon and the insulating film **2***g* is silicon oxide or a metal oxide. When etching silicon, the etching rate of silicon oxide or a metal oxide is slower than that of silicon. The first diameter d**1** and the third diameter d**3** each are larger than the seventh diameter d**7** due to the etching rate difference.

Accordingly, the first columnar part CL includes locations where the diameter has a pinched-in step shape inside the first semiconductor part **13**, the insulating film **2***g*, and the second semiconductor part **14**. Thereby, for example, the insulating film **2***g* has a structure jutting into the first columnar part CL in, for example, the X-Y planar direction. Or, the first columnar part CL includes a level difference where the insulating film **2***g* rests on the first semiconductor part **13** in the Z-axis direction.

For example, the insulating film **2***g* is not etched in the etching process of the sacrificial film when forming the second semiconductor layer **132**. For example, in the state in which there is no second semiconductor layer **132**, the insulating film **2***g* rests on the first columnar part CL, e.g., on the memory film **220**. Therefore, the stacked body **2** does not easily slide down into the space obtained where the sacrificial film is removed. The structure in which the insulating film **2***g* juts into the first columnar part CL is advantageous for suppressing the collapse of the stacked body **2**.

As shown in FIG. **7**, the second columnar part CLHR also is similar. The fourth diameter d**4** and the sixth diameter d**6** each are larger than an eighth diameter d**8**. With respect to the eighth diameter d**8**, the fourth diameter d**4** and the sixth diameter d**6** each are larger not in a linear shape but in a step shape. The eighth diameter d**8** is the diameter of a location of the second columnar part CLHR surrounded with the insulating film **2***g*.

Thus, the second columnar part CLHR also includes locations where the diameter has a pinched-in step shape inside at least the insulating film **2***g* or a level difference where the insulating film **2***g* rests on the first semiconductor part **13** in the Z-axis direction. This structure also is advantageous for suppressing the collapse of the stacked body **2**.

(First Variation)

FIG. **8** is a schematic cross-sectional view illustrating an enlargement of the first columnar part CL and the first semiconductor part **13** of a semiconductor device **100***aa* according to a first variation of the first embodiment. FIG. **9** is a schematic cross-sectional view illustrating an enlarge-

ment of the second columnar part CLHR and the first semiconductor part **13** of the semiconductor device **100***aa* according to the first variation of the first embodiment. The cross section shown in FIG. **8** corresponds to the cross section shown in FIG. **6**; and the cross section shown in FIG. **9** corresponds to the cross section shown in FIG. **7**.

As shown in FIG. **8** and FIG. **9**, the semiconductor device **100***aa* according to the first variation differs from the semiconductor device **100***a* in that, for example, there is no second semiconductor part **14**. In such a case, the insulating film **2***g* may be considered to be included in the stacked body **2**; and the insulator of the stacked body **2** most proximal to the first semiconductor part **13** is used as the insulating film **2***g*. It is also possible to omit the second semiconductor part **14** as in the semiconductor device **100***aa*.

(Manufacturing Method)

A typical example of a method for manufacturing the semiconductor device **100***a* will now be described. In the manufacturing method, the formation of the structures around the interconnects **37***a* to **37***c*, and the formation of the interconnects **37***a* to **37***c* will be described for convenience.

FIG. **10** is a schematic plan view illustrating the semiconductor device **100***a* according to the first embodiment.

FIG. **11**A to FIG. **32**D are schematic cross-sectional views sequentially illustrating the processes, which show the method for manufacturing the semiconductor device **100***a* according to the first embodiment. The plan view shown in FIG. **10** corresponds to the plan view shown in FIG. **3**. The cross sections shown in FIG. **11**A to FIG. **32**A are along line A-A shown in FIG. **10**, The cross sections shown in FIG. **11**B to FIG. **32**B are along line B-B shown in FIG. **10**, The cross sections shown in FIG. **11**C to FIG. **32**C are along line C-C shown in FIG. **10**. The cross sections shown in FIG. **11**D to FIG. **32**D are along line D-D shown in FIG. **10**.

As shown in FIG. **11**A to FIG. **11**D, the element separation region **10***i* is formed inside the substrate **10**; and the transistor Tr is formed inside the active area AA. Continuing, the first insulating film **11** is formed on the substrate **10**. The first insulating film **11** is, for example, an inter-layer insulating film and includes the interconnect **11***a*, The interconnect **11***a* is, for example, a multilayer interconnect; and an interconnect **11***aa* and an interconnect **11***ab* provided above the interconnect **11***aa* are illustrated in FIG. **11**A to FIG. **11**D. Continuing, an insulating film **11***d* is formed on the interconnect **11***ab*. The insulating film **11***d* includes, for example, silicon oxide. Continuing, the first conductive film **12** is formed on the insulating film **11***d*.

Then, as shown in FIG. **12**A to FIG. **12**D, the first conductive film **12** is etched; and the first conductive film **12** is patterned into a designed pattern. It is sufficient for the first conductive film **12** to remain inside the memory cell array **2***m*; and, for example, the first conductive film **12** is removed in the staircase portion **25**. The first conductive film **12** also is removed from the portions where the interconnects **37***c* are formed in the tap region (Tap) inside the memory cell array **2***m*. The interconnects **37***c* are electrically connected to the interconnects **11***ab*. Continuing, an insulating film **31** is formed by filling, with an insulator, the clearance made by patterning the first conductive film **12**. The insulating film **31** includes, for example, silicon oxide.

Continuing as shown in FIG. **13**A to FIG. **13**D, the first semiconductor layer **131** is formed on the first conductive film **12** and the insulating film **31**. The first semiconductor layer **131** includes, for example, n-type doped silicon. Continuing, the first intermediate film **13***a* is formed on the first semiconductor layer **131**. The first intermediate film **13***a* includes, for example, silicon oxide. Continuing, the first sacrificial film **13***b* is formed on the first intermediate film **13***a*. The first sacrificial film **13***b* includes, for example, n-type doped silicon or undoped silicon. Continuing, the second intermediate film **13***c* is formed on the first sacrificial film **13***b*. The second intermediate film **13***c* includes, for example, silicon oxide. Continuing, the third semiconductor layer **133** is formed on the second intermediate film **13***c*. The third semiconductor layer **133** includes, for example, n-type doped silicon or undoped silicon. Thereby, for example, the basic structure of the base body **1** when manufacturing is obtained.

Then, as shown in FIG. **14**A to FIG. **14**D, the third semiconductor layer **133**, the second intermediate film **13***c*, the first sacrificial film **13***b*, the first intermediate film **13***a*, and the first semiconductor layer **131** are etched; and these films are patterned into a designed pattern. Continuing, an insulating film **32** is formed by filling, with an insulator, the opening made by patterning these films. The insulating film **32** includes, for example, silicon oxide.

Continuing as shown in FIG. **15**A to FIG. **15**D, the insulating film **2***g* is formed on the third semiconductor layer **133** and the insulating film **32**. The insulating film **2***g* includes, for example, silicon oxide or a metal oxide. Continuing, the fourth semiconductor layer **134** is formed on the insulating film **2***g*. The fourth semiconductor layer **134** includes, for example, n-type doped silicon. Thereby, the second semiconductor part **14** is formed, Continuing, the insulating layer **22***b* is formed on the fourth semiconductor layer **134**. Continuing, second sacrificial films **23** and the insulating layers **22** are stacked alternately on the insulating layer **22***b*. The insulating layers **22** and **22***b* each include, for example, silicon oxide. The second sacrificial films **23** include, for example, silicon nitride. Thereby, the basic structure of the stacked body **2** when manufacturing that is positioned in the Z-axis direction with respect to the first semiconductor part **13** is obtained.

Then, as shown in FIG. **16**A to FIG. **16**D, the insulating layers **22** and the second sacrificial films **23** are patterned into a staircase configuration in the staircase portion **2***s*. Thereby, the staircase region (Staircase) is obtained in the staircase portion **2***s*. Continuing, an insulating film **24** is formed by filling the recess formed in the staircase region with an insulator. The insulating film **24** includes, for example, silicon oxide.

Continuing as shown in FIG. **17**A to FIG. **17**D, the holes HR are formed by performing anisotropic etching of the stacked body **2**, the fourth semiconductor layer **134**, the insulating film **2***g*, the third semiconductor layer **133**, the second intermediate film **13***c*, the first sacrificial film **13***b*, the first intermediate film **13***a*, and the first semiconductor layer **131** in the tap region (Tap) and the staircase region (Staircase). The holes HR are formed partway through the first semiconductor layer **131** from the upper end of the stacked body **2**, In the specification, reactive ion etching (RIE) is a specific example of the anisotropic etching. For example, RIE can be employed for the anisotropic etching performed hereinbelow as well.

Then, as shown in FIG. **18**A to FIG. **18**D, isotropic etching of the fourth semiconductor layer **134**, the insulating film **2***g*, the third semiconductor layer **133**, the second intermediate film **13***c*, the first sacrificial film **13***b*, the first intermediate film **13***a*, and the first semiconductor layer **131** is performed via the holes HR; and the diameters of the holes HR are enlarged at the portions corresponding to the first semiconductor part **13** (e.g., the first semiconductor layer **131**, the first sacrificial film **13***b*, and the third semiconductor layer **133**) and the portions corresponding to the second

semiconductor part **14** (e.g., the fourth semiconductor layer **134**). For example, an etchant that can etch silicon quickly compared to silicon oxide and/or a metal oxide is selected for the isotropic etching process. Therefore, as shown in FIG. **6**, for example, the etching amount at the insulating film **2***g* is low compared to those of the portions corresponding to the first and second semiconductor parts **13** and **14**. The etching amounts of the portions corresponding to the insulating film **2***g* and the first and second semiconductor parts **13** and **14** are shown as being equal in FIG. **18**A to FIG. **18**D and subsequent drawings to prevent complexity of the drawings. This is similar for subsequent drawings as well. Chemical vapor etching (CVE) or wet etching are specific examples of the isotropic etching in the specification.

Continuing as shown in FIG. **19**A to FIG. **19**D, the third insulators **5** are formed by filling the interiors of the holes HR with an insulator. The third insulators **5** include, for example, silicon oxide. Thereby, the second columnar parts CLHR are formed.

Then, as shown in FIG. **20**A to FIG. **20**D, the memory holes NH are formed by performing anisotropic etching of the stacked body **2**, the fourth semiconductor layer **134**, the insulating film **2***g*, the third semiconductor layer **133**, the second intermediate film **13***c*, the first sacrificial film **13***b*, the first intermediate film **13***a*, and the first semiconductor layer **131** in the cell region (Cell). The memory holes MH are formed partway through the first semiconductor layer **131** from the upper end of the stacked body **2**.

Then, as shown in FIG. **21**A to FIG. **21**D, isotropic etching of the fourth semiconductor layer **134**, the insulating film **2***g*, the third semiconductor layer **133**, the second intermediate film **13***c*, the first sacrificial film **13***b*, the first intermediate film **13***a*, and the first semiconductor layer **131** is performed via the memory holes MH; and the diameters of the memory holes NH are enlarged at the portions corresponding to the first semiconductor part **13** (e.g., the first semiconductor layer **131**, the first sacrificial film **13***b*, and the third semiconductor layer **133**) and the portions corresponding to the second semiconductor part **14** (e.g., the fourth semiconductor layer **134**). For example, an etchant that can etch silicon quickly compared to silicon oxide (metal oxide) and/or silicon nitride is selected for the isotropic etching process.

Although not illustrated in FIG. **21**A, portions of the first intermediate film **13***a* and the second intermediate film **13***c* may protrude into the enlarged portions of the memory holes NIH. In such a case, recesses **13***d* (referring to FIG. **6** and FIG. **8**) may be formed in portions of the semiconductor body **210** formed inside the memory holes NH corresponding to the levels of the first intermediate film **13***a* and the second intermediate film **13***c*.

Then, as shown in FIG. **22**A to FIG. **22**D, the memory film **220** is formed inside the memory holes NH. The memory film **220** includes silicon nitride and silicon oxide. Continuing, the semiconductor body **210** is formed on the memory film **220**. The semiconductor body **210** includes, for example, undoped silicon or p-type doped silicon. Continuing, the core layer **230** is formed on the semiconductor body **210**. The core layer **230** includes, for example, silicon oxide. Thereby, the memory holes MH are filled with the semiconductor body **210**, the memory film **220**, and the core layer **230**.

Continuing as shown in FIG. **23**A to FIG. **23**D, the deep slits ST are formed by performing anisotropic etching of the stacked body **2**, the fourth semiconductor layer **134**, the insulating film **2***g*, the third semiconductor layer **133**, the second intermediate film **13***c*, and the first sacrificial film **13***b*. The deep slits ST are formed partway through the first sacrificial film **13***b* from the upper end of the stacked body **2**.

Then, as shown in FIG. **24**A to FIG. **24**D, a first stopper film **3***s* is formed on the side walls of the deep slits ST. The first stopper film **3***s* includes, for example, silicon nitride.

Continuing as shown in FIG. **25**A to FIG. **25**D, the first sacrificial film **13***b* is removed by performing isotropic etching of the first sacrificial film **13***b* via the deep slits ST. For example, an etchant that can etch n-type doped silicon or undraped silicon quickly compared to silicon oxide and silicon nitride is selected for the isotropic etching process. Thereby, the first space S**1** is formed between the first intermediate film **13***a* and the second intermediate film **13***c*.

Then, as shown in FIG. **26**A to FIG. **26**D, the cover insulating film **221** of the memory film **220** (see FIG. **2**A and FIG. **2**B) is removed by performing isotropic etching of the cover insulating film **221** via the deep slits ST. For example, an etchant that can etch silicon oxide quickly compared to silicon nitride is selected for the isotropic etching process. Continuing, the charge trapping film **222** of the memory film **220** (FIG. **2**A and FIG. **2**B) is removed by performing isotropic etching of the charge trapping film **222** via the deep slits ST. For example, an etchant that can etch silicon nitride quickly compared to silicon oxide is selected for the isotropic etching process. Continuing, the tunneling insulating film **223** of the memory film **220** (FIG. **2**A and FIG. **2**B) is removed via the deep slits ST. The first intermediate film **13***a* and the second intermediate film **13***c* also are removed in this process. For example, an etchant that can etch silicon oxide quickly compared to silicon nitride is selected for the isotropic etching process. Thereby, the first space S**1** is enlarged between the first semiconductor layer **131** and the third semiconductor layer **133**; and the semiconductor body **210** of the first columnar part CL is exposed in the first space S**1**. The contact portion **210***c* is formed at a position where the semiconductor body **210** is exposed. The recess portions **5***r* are formed in the second columnar parts CLHR.

Continuing as shown in FIG. **27**A to FIG. **27**D, the second semiconductor layer **132** is formed by filling the interior of the first space S**1** with a semiconductor via the deep slits ST. The second semiconductor layer **132** is, for example, n-type doped silicon.

Then, as shown in FIG. **28**A to FIG. **28**D, the first stopper film **3***s* and the second sacrificial films **23** are removed by performing isotropic etching of the first stopper film **3***s* and the second sacrificial films **23** via the deep slits ST. Thereby, a second space S**2** is formed between the insulating layers **22**. For example, an etchant that can etch silicon nitride quickly compared to silicon oxide and polysilicon is selected for the isotropic etching process.

Continuing as shown in FIG. **29**A to FIG. **29**D, the conductive layers **21** are formed by filling the interior of the second space S**2** with a conductor via the deep slits ST. The conductive layers **21** include, for example, tungsten.

Then, as shown in FIG. **30**A to FIG. **30**D, the plate portions **3** are formed by filling the deep slits ST with an insulator. The plate portions **3** include, for example, silicon oxide.

Continuing as shown in FIG. **31**A to FIG. **31**D, the shallow slits SHE are formed by performing anisotropic etching of the conductive layers **21** and the insulating layers **22** partway through the stacked body **2**. Continuing, the second insulators **4** are formed by filling the shallow slits SHE with an insulator. The second insulators **4** include, for example, silicon oxide.

Then, as shown in FIG. **32**A to FIG. **32**D, multiple third columnar parts CLCC are formed inside the staircase region (Staircase) of the stacked body **2**. The third columnar parts CLCC respectively include the interconnects **37***a*. The interconnects **37***a* are electrically insulated from the stacked body **2** by insulators **36***a*. The respective interconnects **37***a* are electrically connected to one conductive layer **21**. Continuing, multiple fourth columnar parts CLCP are formed inside the insulating film **32** and the tap region (Tap) of the stacked body **2**. The fourth columnar parts CLCP respectively include the interconnects **37***b*, The interconnects **37***b* are electrically insulated from the stacked body **2** by insulators **36***b*. The interconnects **37***b* each are electrically connected to the first conductive film **12**. Continuing, multiple fifth columnar parts CLC**4** are formed inside the insulating film **31**, the insulating film **32**, and the tap region (Tap) of the stacked body **2**. The fifth columnar parts CLC**4** respectively include the interconnects **37***c*. The interconnects **37***c* are electrically insulated from the stacked body **2** by insulators **36***c*. The respective interconnects **37***c* are electrically connected to one interconnect **11***ab*.

Subsequently, although not particularly illustrated, it is sufficient to form the bit lines BL, etc., above the stacked body **2** according to well-known methods, Thus, for example, the semiconductor device **100***a* according to the first embodiment can be manufactured.

Second Embodiment

(Semiconductor Device)

FIG. **33** is a schematic cross-sectional view illustrating an enlargement of the first columnar part CL, the first semiconductor part **13**, and the second semiconductor part **14** of a semiconductor device **100***b* according to a second embodiment. The cross section shown in FIG. **33** corresponds to the cross section shown in FIG. **6**. FIG. **34** is a schematic cross-sectional view illustrating an enlargement of the second columnar part CLHR, the first semiconductor part **13**, and the second semiconductor part **14** of the semiconductor device **100***b* according to the second embodiment. The cross section shown in FIG. **34** corresponds to the cross section shown in FIG. **7**.

In the semiconductor device **100***b* according to the second embodiment as shown in FIG. **33**, the third diameter d**3** is substantially equal to the second diameter d**2**, and equal to or less than the first diameter d**1**. The semiconductor device **100***b* differs from the semiconductor device **100***a* according to the first embodiment on this point. The third diameter d**3** is a diameter of the first columnar part CL at a portion surrounded with the fourth semiconductor layer **134** inside the second semiconductor part **14**. The second diameter d**2** is the diameter of the first columnar part CL at a portion surrounded with the insulating layer **22** (e.g., the insulating layer **22***b* most proximal to the first semiconductor part **13**). The first diameter d**1** is a diameter of the first columnar part CL at a portion surrounded with the first semiconductor part **13** (e.g., the third semiconductor layer **133**) other than the contact portion in which the second semiconductor layer **132** contacts the semiconductor body **210**.

In the semiconductor device **100***b* as shown in FIG. **34**, the sixth diameter d**6** is substantially equal to the fifth diameter d**5**, and equal to or less than the fourth diameter d**4**. The semiconductor device **100***b* differs from the semiconductor device **100***a* on this point. The sixth diameter d**6** is a diameter of the second columnar part CLHR at a portion surrounded with the fourth semiconductor layer **134** inside the second semiconductor part **14**. The fifth diameter d**5** is a diameter of the second columnar part CLHR at a portion surrounded with the insulating layer **22** (e.g., the insulating layer **22***b* most proximal to the first semiconductor part **13**). The fourth diameter d**4** is a diameter of the second columnar part CLHR at a portion surrounded with the first semiconductor part **13** (e.g., the third semiconductor layer **133**) other than the recess portion.

As in the semiconductor device **100***b*, the third diameter d**3** may be equal to or less than the first diameter d**1**; and the sixth diameter d**6** may be equal to or less than the fourth diameter d**4**.

Similarly to the first embodiment, it is also possible to set one of the third diameter d**3** and the sixth diameter d**6** such that the third diameter d**3** is equal to the second diameter d**2** or equal to or less than the first diameter d**1**, or the sixth diameter d**6** is equal to the fifth diameter d**5** or equal to or less than the fourth diameter d**4**.

(Manufacturing Method)

A typical example of the method for manufacturing the semiconductor device **100***b* will now be described.

FIG. **35**A to FIG. **39**D are schematic cross-sectional views sequentially illustrating the processes, which show the method for manufacturing the semiconductor device **100***b* according to the second embodiment. The cross sections shown in FIG. **35**A to FIG. **39**A correspond to the cross section shown in FIG. **17**A, etc. The cross sections shown in FIG. **35**B to FIG. **39**B correspond to the cross section shown in FIG. **17**B, etc. The cross sections shown in FIG. **35**C to FIG. **39**C correspond to the cross section shown in FIG. **17**C, etc. The cross sections shown in FIG. **35**D to FIG. **39**D correspond to the cross section shown in FIG. **17**D, etc.

As shown in FIG. **35**A to FIG. **35**D, similarly to the first embodiment, for example, according to the manufacturing method described with reference to FIG. **11**A to FIG. **16**D, the staircase region (Staircase) is formed in the staircase portion **2***s*; and the insulating film **24** is formed by burying the recess formed in the staircase region with an insulator.

In the semiconductor device **100***b* according to the second embodiment, the components of the first semiconductor layer **131**, the first sacrificial film **13***b*, the third semiconductor layer **133**, and the fourth semiconductor layer **134** are, for example, as follows.

First semiconductor layer **131**: Doped silicon (e.g., n-type)

First sacrificial film **13***b*: Undoped silicon

Third semiconductor layer **133**: Undoped silicon

Fourth semiconductor layer **134**: Doped silicon (e.g., n-type)

Then, the holes HR are formed by performing anisotropic etching of the stacked body **2**, the fourth semiconductor layer **134**, the insulating film **2***g*, the third semiconductor layer **133**, the second intermediate film **13***c*, the first sacrificial film **13***b*, the first intermediate film **13***a*, and the first semiconductor layer **131** in the tap region (Tap) and the staircase region (Staircase).

Continuing as shown in FIG. **36**A to FIG. **36**D, the diameters of the holes HR are enlarged at the first sacrificial film **13***b* and the third semiconductor layer **133** by performing isotropic etching of the fourth semiconductor layer **134**, the insulating film **2***g*, the third semiconductor layer **133**, the second intermediate film **13***c*, the first sacrificial film **13***b*, the first intermediate film **13***a*, and the first semiconductor layer **131** via the holes HR. For example, an etchant that can etch silicon quickly compared to silicon oxide and/or silicon nitride and can etch undoped silicon quickly compared to doped silicon is selected for the isotropic etching process. An example of such an etchant is an organic alkaline, e.g.,

choline (2-Hydroxyethyltrirnethylammonium Hydroxide). In the case where choline is used as the etchant, the isotropic etching is, for example, wet etching. For example, the etchant that includes choline can etch undoped silicon quickly compared to n-type doped silicon and p-type doped silicon.

Then, as shown in FIG. **37**A to FIG. **37**D, the third insulators **5** are formed by filling the interiors of the holes HR with an insulator. Continuing, the memory holes MH are formed by performing anisotropic etching of the stacked body **2**, the fourth semiconductor layer **134**, the insulating film **2***g*, the third semiconductor layer **133**, the second intermediate film **13***c*, the first sacrificial film **13***b*, the first intermediate film **13***a*, and the first semiconductor layer **131** in the cell region (Cell).

Continuing as shown in FIG. **38**A to FIG. **38**D, the diameters of the memory holes MH are enlarged at the portions corresponding to the first semiconductor part **13** (e.g., the first sacrificial film **13***b* and the third semiconductor layer **133**) by performing isotropic etching of the fourth semiconductor layer **134**, the insulating film **2***g*, the third semiconductor layer **133**, the second intermediate film **13***c*, the first sacrificial film **13***b*, the first intermediate film **13***a*, and the first semiconductor layer **131** via the memory holes MH. In the isotropic etching process as well, it is sufficient to use, for example, an etchant including choline as the etchant.

Then, as shown in FIG. **39**A to FIG. **39**D, the memory film **220** is formed inside the memory holes MH. The memory film **220** includes silicon nitride and silicon oxide. Continuing, the semiconductor body **210** is formed on the memory film **220**. The semiconductor body **210** includes, for example, undoped silicon or p-type doped silicon. Continuing, the core layer **230** is formed on the semiconductor body **210**. The core layer **230** includes, for example, silicon oxide. Thereby, the memory holes MH are filled with the semiconductor body **210**, the memory film **220**, and the core layer **230**.

Although descriptions of the following processes are omitted, the semiconductor device **100***b* may be manufactured according to a manufacturing method similar to that of the first embodiment, e.g., the manufacturing method described with reference to FIG. **23**A to FIG. **32**D. Thus, it is possible to manufacture the semiconductor device **100***b*.

Third Embodiment

(Semiconductor Device)

FIG. **40** is a schematic cross-sectional view illustrating an enlargement of the first columnar part CL, the first semiconductor part **13**, and the second semiconductor part **14** of a semiconductor device **100***c* according to the third embodiment. The cross section shown in FIG. **40** corresponds to the cross section shown in FIG. **6**.

In the semiconductor device **100***c* according to the third embodiment as shown in FIG. **40**, the first semiconductor part **13** includes a first semiconductor region (e.g., the first to third semiconductor layers **131** to **133**). The first semiconductor region includes, for example, a portion having the n-type conductivity. For example, the first and second semiconductor layers **131** and **132** each include n-type silicon; and the third semiconductor layer **133** includes undoped silicon. Or, the first to third semiconductor layers **131** to **133** each include n-type silicon.

The first columnar part CL includes a bottom portion provided in the interior of the first semiconductor part **13**. An insulating film **144** is provided between the first semiconductor part **13** and the semiconductor body **210** of the first columnar part CL of the bottom portion in addition to the memory film **220**. The insulating film **144** is provided to surround the bottom portion of the first columnar part CL. A contact portion CLC where a portion of the semiconductor body **210** is exposed is provided by selectively removing portions of the insulating film **144** and the memory film **220**. The second semiconductor layer **132** contacts the semiconductor body **210** at the contact portion CLC.

In the semiconductor device **100***c*, the first columnar part CL includes an insulating body CLB positioned between the first semiconductor part **13** and the semiconductor body **210**, The insulating body CLB includes an insulating portion ail and an insulating portion CLI**2**. The insulating portion CLI**1** is positioned between the insulating film **2***g* and the contact portion CLC. The insulating portion CLI**2** is positioned between the first conductive film **12** and the contact portion CLC. The insulating body CLB includes the insulating film **144** and a portion of the memory film **220**. The second semiconductor layer **132** is provided to surround the semiconductor body **210** between the insulating portion CLI**1** and the insulating portion CLI**2**, and contacts the outer perimeter of the semiconductor body **210**. For example, at the insulating portion CLI**1**, the thickness of the insulating body CLB in the X-axis direction and the Y-axis direction is thicker than the film thickness in the X-axis direction and the Y-axis direction of the memory film **220** inside the stacked body **2**.

In the semiconductor device **100***c*, the diameter of the first columnar part CL inside the stacked body **2** is smaller than the diameter of the first columnar part CL inside the first semiconductor part **13**. Specifically, the second diameter d**2** of the first columnar part CL at a portion surrounded with the insulating layer **22** in the stacked body **2** is smaller than a ninth diameter d**9** of the first columnar part CL at a portion surrounded with the first semiconductor part **13** other than the contact portion CLC. Similarly to the first and second embodiments, for example, the second diameter d**2** is a diameter of the first columnar part CL at a portion surrounded with the insulating layer **22***b* most proximal to the first semiconductor part **13**. The ninth diameter d**9** is a diameter of the bottom portion of the first columnar part CL positioned inside the first semiconductor part **13** most proximal to the stacked body **2**. For example, the ninth diameter d**9** is a diameter of the first columnar part CL at a portion surrounded with the third semiconductor layer **133**.

As shown in FIG. **40**, for example, in the case where the second semiconductor part **14** is provided between the stacked body **2** and the first semiconductor part **13**, the seventh diameter d**7** of the first columnar part CL is smaller than the ninth diameter d**9**. Similarly to the first and second embodiments, the seventh diameter d**7** is a diameter of the first columnar part CL at a portion surrounded with the insulating film **2***g*.

In the semiconductor device **100***c*, the ninth diameter d**9** of the first columnar part CL is larger than the second diameter d**2** or the seventh diameter d**7**. Therefore, similarly to the first and second embodiments, when forming the second semiconductor layer **132** by replacing the sacrificial film, a diameter of the first columnar part CL that is thick enough to suppress the collapse of the stacked body **2** can remain at the contact location (the contact portion CLC) between the second semiconductor layer **132** and the semiconductor body **210**. According to the semiconductor device **100***c*, similarly to the first and second embodiments, the collapse of the stacked body **2** can be suppressed, e.g., in the manufacturing processes.

(Manufacturing Method)

A typical example of the method for manufacturing the semiconductor device **100***c* will now be described.

FIG. **41** is a schematic plan view illustrating the semiconductor device **100***c* according to the third embodiment. FIG. **42**A to FIG. **48**D and FIG. **49** to FIG. **56** are schematic cross-sectional views sequentially illustrating the processes, which show the method for manufacturing the semiconductor device **100***c* according to the third embodiment. The plan view shown in FIG. **41** corresponds to the plan view shown in FIG. **3**. The cross sections shown in FIG. **42**A to FIG. **48**A and FIG. **49** to FIG. **56** are along line A-A shown in FIG. **41**, The cross sections shown in FIG. **42**B to FIG. **48**B are along line B-B shown in FIG. **41**. The cross sections shown in FIG. **42**C to FIG. **48**C are along line C-C shown in FIG. **41**. The cross sections shown in FIG. **42**D to FIG. **48**D are along line D-D shown in FIG. **41**.

As shown in FIG. **42**A to FIG. **42**D, similarly to the first embodiment, for example, according to the manufacturing method described with reference to FIG. **11**A to FIG. **13**D, the third semiconductor layer **133** is formed on the second intermediate film **13***c*; and, for example, the basic structure of the base body **1** when manufacturing is obtained.

Then, as shown in FIG. **43**A to FIG. **43**D, the third semiconductor layer **133**, the second intermediate film **13***c*, the first sacrificial film **13***b*, the first intermediate film **13***a*, and the first semiconductor layer **131** are etched; and these films are patterned into a designed pattern. In the embodiment, openings CPHt and CPH are formed by the patterning. The openings CPHt have line patterns along the X-axis direction and the Y-axis direction. Although only one opening CPHt is shown in FIG. **41**, actually, the openings CPHt multiply exist. The openings CPHt that have the line patterns have, for example, multiple island portions CPHi in the tap region (Tap). The island portions CPHi are arranged in a column configuration along the Y-axis direction (see FIG. **41**). For example, the island portions CPHi are formed in each region between the deep slit ST and the deep slit ST. The openings CPH are multiply provided and have an isolated hole pattern. The openings CPH are formed respectively inside the island portions CPHi.

Continuing as shown in FIG. **44**A to FIG. **44**D, base openings CPHmb are formed by etching the third semiconductor layer **133**, the second intermediate film **13***c*, the first sacrificial film **13***b*, the first intermediate film **13***a*, and the first semiconductor layer **131** in the cell region (Cell). The base openings CPHmb have an isolated hole pattern and are formed partway through the first semiconductor layer **131**. For example, a hole opening diameter D**1** of the base opening CPHmb is formed to be narrower than, for example, an opening width W**1** along the Y-axis direction of the opening CPHt facing the island portion CPHi and narrower than, for example, a hole opening diameter D**2** of the opening CPH. Although not particularly illustrated, the opening diameter **131** is set to be narrower than the opening width in the X-axis direction of the opening CPHt along the island portion CPHi. The insulating film **144** is formed to cover the inner surfaces of the base openings CPHmb, the openings CPHt, and the openings CPH. The insulating film **144** is, for example, a silicon oxide film.

Then, as shown in FIG. **45**A to FIG. **45**D, a sacrificial film **145** is formed to fill the base openings CPHmb. For example, an amorphous silicon film is formed on the structure body shown in FIG. **44**A to FIG. **44**D as the sacrificial film **145**. The sacrificial film **145** is formed to have a thickness that plugs the base openings CPHmb but leaves a space inside the openings CPH and CPHt.

Continuing as shown in FIG. **46**A to FIG. **46**D, for example, the sacrificial film **145** is removed by isotropic etching. Thereby, the sacrificial film **145** remains inside the base openings CPHmb while being removed from inside the openings CPH and CPHt. Further, the insulating film **144** is removed, which is exposed by removing the sacrificial film **145**.

Then, as shown in FIG. **47**A to FIG. **47**D, a silicon oxide film is formed by depositing an insulator, e.g., silicon oxide, on the structure body shown in FIG. **46**A to FIG. **46**D, Continuing, the silicon oxide is caused to remain inside the openings CPH and CPHt by planarizing the silicon oxide film by using, for example, chemical mechanical polishing, etc. Thereby, the insulating film **32** is formed inside the openings CPH and CPHt. The insulating film **32** that is formed in the tap region (Tap) surrounds the island portions CPHi. Thereby, the first sacrificial film **13***b* can be caused to remain inside the tap region (Tap) when removing the first sacrificial film **13***b*. Therefore, for example, even in the case where the second columnar parts CLHR are stopped partway through the second semiconductor part **14**, the collapse of the stacked body **2** can be suppressed.

Then, as shown in FIG. **48**A to FIG. **48**D, the insulating film **2***g* is formed on the third semiconductor layer **133**, the insulating film **32**, and the sacrificial film **145**, Continuing, the insulating layers **22** and the second sacrificial films **23** are stacked alternately after forming the fourth semiconductor layer **134** on the insulating film **2***g*, Thereby, for example, similarly to the manufacturing method described with reference to FIG. **15**A to FIG. **15**D, the basic structure of the stacked body **2** when manufacturing that is positioned in the Z-axis direction with respect to the first semiconductor part **13** is obtained.

The insulating layers **22** and the second sacrificial films **23** are patterned into a staircase configuration in the staircase portion **2***s*. Thereby, the staircase region (Staircase) is obtained in the staircase portion **2***s*. Continuing, the insulating film **24** is formed by burying the recess formed in the staircase region with an insulator.

Then, the holes HR are formed by performing anisotropic etching of the stacked body **2** and the fourth semiconductor layer **134** in the tap region (Tap) and the staircase region (Staircase). In the embodiment, the holes HR are formed partway through the fourth semiconductor layer **134** from the upper end of the stacked body **2**. Continuing, the third insulators **5** are formed by filling the interiors of the holes HR with an insulator. Thereby, the second columnar parts CLHR are formed (see FIG. **17**A to FIG. **19**D).

Continuing as shown in FIG. **49**, the memory holes MH are formed by performing anisotropic etching of the stacked body **2**, the fourth semiconductor layer **134**, and the insulating film **2***g* in the cell region (Cell). The memory holes NIH are formed to reach the sacrificial film **145**.

As shown in FIG. **50**, the sacrificial film **145** is selectively removed via the memory holes MH. For example, the sacrificial film **145** is removed by supplying, via the memory holes MH, an etchant having selectivity with respect to the stacked body **2**, the fourth semiconductor layer **134**, and the insulating film **2***g*.

As shown in FIG. **51**, the memory film **220** is formed inside the memory holes MH and inside the space where the sacrificial film **145** is removed. The memory film **220** includes silicon nitride and silicon oxide. Continuing, the semiconductor body **210** is formed on the memory film **220**. The semiconductor body **210** includes, for example, undoped silicon or p-type doped silicon. Continuing, the core layer **230** is formed on the semiconductor body **210**.

Thereby, the memory holes NIH and the space where the sacrificial film **145** is removed are filled with the semiconductor body **210**, the memory film **220**, and the core layer **230**.

Then, as shown in FIG. **52**, the deep slits ST are formed by performing anisotropic etching of the stacked body **2**, the fourth semiconductor layer **134**, the insulating film **2***g*, the third semiconductor layer **133**, the second intermediate film **13***c*, and the first sacrificial film **13***b*. The deep slits ST are formed partway through the first sacrificial film **13***b* from the upper end of the stacked body **2**. Continuing, the first stopper film **3***s* is formed on the side walls of the deep slits ST. The first stopper film **3***s* includes, for example, silicon nitride.

Continuing as shown in FIG. **53**, the first sacrificial film **13***b* is removed by performing isotropic etching of the first sacrificial film **13***b* via the deep slits ST. For example, an etchant that can etch n-type doped silicon or undoped silicon quickly compared to silicon oxide and silicon nitride is selected for the isotropic etching process. Thereby, the first space S**1** is formed between the first intermediate film **13***a* and the second intermediate film **13***c*.

Then, as shown in FIG. **54**, the first and second intermediate films **13***a* and **13***c* are removed via the deep slits ST. Further, the semiconductor body **210** is exposed in the first space S**1** by removing a portion of the insulating film **144** and a portion of the memory film **220**.

Continuing as shown in FIG. **55**, the second semiconductor layer **132** is formed by filling the interior of the first space S**1** with a semiconductor via the deep slits ST. The second semiconductor layer **132** is, for example, n-type doped silicon. Thereby, for example, a contact portion is obtained between the second semiconductor layer **132** and the side wall of the semiconductor body **210**.

Then, as shown in FIG. **56**, the second sacrificial films **23** are replaced with the conductive layers **21**. For example, the first stopper film **3***s* and the second sacrificial films **23** are removed by performing isotropic etching of the first stopper film **3***s* and the second sacrificial films **23** via the deep slits ST. Thereby, the second space S**2** is formed between the insulating layers **22**. Continuing, after forming the conductive layers **21** by filling the interior of the second space S**2** with a conductor via the deep slits ST, the plate portions **3** are formed by filling the deep slits ST with an insulator (see FIG. **28**A to FIG. **30**D).

FIGS. **57**A and **57**B are schematic views showing cross sections along line B-B and line C-C in the tap region Tap. For example, the second columnar parts CLHR, the fourth columnar parts CLCP, and the fifth columnar parts CLC**4** are formed in the tap region (Tap). In the example, the second columnar parts CLHR are formed to have lengths that reach the fourth semiconductor layer **134** from the upper surface of the stacked body **2**.

As shown in FIG. **57**A, the fourth columnar part CLCP is formed to have a length that reaches the first conductive film **12** from the upper surface of the stacked body **2**. The fourth columnar part CLCP includes the insulator **36***b* and the interconnect **37***b*. The interconnect **37***b* extends in the Z-direction and electrically connects the first conductive film **12** to an upper layer interconnect (not illustrated). The insulator **36***b* is provided to surround the interconnect **37***b* and electrically insulate the interconnect **37***b* from the conductive layers **21**.

As shown in FIG. **57**B, the fifth columnar part CLC**4** has a length that reaches the interconnect **11***ab* from the upper surface of the stacked body **2**. The fifth columnar part CLC**4** includes the insulator **36***c* and the interconnect **37***c*. The interconnect **37***c* electrically connects an upper layer interconnect (not illustrated) to the interconnect **11***ab* positioned at a level lower than the first conductive film **12**. The insulator **36***c* is provided to surround the interconnect **37***c* and electrically insulate the interconnect **37***c* from the conductive layers **21**.

In the embodiment, the first intermediate film **13***a*, the first sacrificial film **13***b*, and the second intermediate film **13***c* remain in the tap region (Tap) surrounded with the insulating film **32**. In other words, the tap region (Tap) supports the stacked body **2** and performs the role of preventing the collapse of the stacked body **2** in the process of removing the first sacrificial film **13***b* (see FIG. **53**) and the process of removing the first intermediate film **13***a* and the second intermediate film **13***c* (see FIG. **54**).

Although descriptions of the following processes are omitted, the semiconductor device **100***c* is manufactured according to a manufacturing method similar to that of the semiconductor device **100***a* according to the first embodiment, e.g., the manufacturing method described with reference to FIG. **31**A to FIG. **32**D. Thus, it is possible to manufacture the semiconductor device **100***c*.

Fourth Embodiment

(Semiconductor Device)

FIG. **58** is a schematic cross-sectional view illustrating a semiconductor device **100***d* according to a fourth embodiment. FIG. **59**A is a schematic view showing a cross section along line LX-LX in FIG. **58**. FIG. **58** is a schematic view showing a cross section along line LX**1**-LX**1** in FIG. **59**A. FIG. **59**B is a schematic cross-sectional view along line LX**2**-LX**2** in FIG. **59**A. The schematic plan view shown in FIG. **59**A shows a portion of the cell region (Cell).

As shown in FIG. **58** and FIG. **59**B, the semiconductor device **100***d* according to the fourth embodiment includes the base body **1**, the stacked body **2**, the plate portions **3**, and the multiple first columnar parts CL similarly to the semiconductor device **100***a*. Although the base body **1** of the semiconductor device **100***d* includes the substrate **10**, the first insulating film **11**, the first conductive film **12**, and the first semiconductor part **13**, the substrate **10** and the first insulating film **11** are not illustrated in FIG. **58** and FIG. **59**B, Although the semiconductor device **100***d* also includes the multiple second columnar parts CLHR, the multiple second columnar parts CLHR are not illustrated in FIG. **58** and FIG. **59**B.

As shown in FIG. **58**, the first semiconductor part **13** of the semiconductor device **100***d* includes the first semiconductor layer **131** and the second semiconductor layer **132**. The first semiconductor layer **131** and the second semiconductor layer **132** are, for example, n-type doped silicon layers. The first semiconductor layer **131** is provided on the first conductive film **12**; and the second semiconductor layer **132** is provided on the first semiconductor layer **131**.

The multiple first columnar parts CL each extend through the stacked body **2** from the upper end of the stacked body **2** along the Z-axis direction and are provided inside the stacked body **2** and inside the first semiconductor part **13**. Also, the multiple first columnar parts CL are integrated as one body with a bottom portion LC positioned inside the second semiconductor layer **132** and spreading along in-plane (X-Y plane) direction of the substrate under the multiple first columnar parts CL. An insulative intermediate film **136** is further provided between the first semiconductor layer **131** and the bottom portion LC positioned inside the second semiconductor layer **132**.

The multiple first columnar parts CL include the semiconductor body **210**, the memory film **220**, and the core layer **230**. The semiconductor body **210** extends along the Z-axis direction through the multiple first columnar parts CL and includes channel portions **210**A used to form the channels of the memory strings, and an extension portion **210**B provided inside the bottom portion LC and spreading along the in-plane direction of the substrate under the multiple first columnar parts CL. For the semiconductor body **210** inside the multiple first columnar parts CL, the extension portion **210**B is formed continuously to be shared by the multiple channel portions **210**A and to electrically connect the multiple channel portions **210**A to each other. The portions of the memory film **220** and the core layer **230** inside the multiple first columnar parts CL also are formed continuously to share the portion provided at the bottom portion LC. The memory film **220** includes a portion positioned between the intermediate film **136** and the bottom surface of the semiconductor body **210** positioned inside the bottom portion LC.

In the semiconductor device **100***d*, the semiconductor bodies **210** of the multiple first columnar parts CL are electrically connected to the second semiconductor layer **132** via the extension portion **210**B provided inside the bottom portion LC under the multiple first columnar parts CL. The extension portion **210**B of the semiconductor body **210** that is provided inside the bottom portion LC includes a side surface portion **210***s* that is not covered with the memory film **220** at an outer perimeter portion spreading in the X-Y planar direction. The extension portion **210**B of the semiconductor body **210** contacts the second semiconductor layer **132** adjacent in the X-Y planar direction at the side surface portion **210***s*. The conductivity type of the extension portion **210**B of the semiconductor body **210** is, for example, the p-type. For example, the second semiconductor layer **132** and the extension portion **210**B of the semiconductor body **210** that are in contact at the side surface portion **210***s* are electrically connected to each other by forming a p-n junction.

As shown in FIG. **59**A, the bottom portion LC that extends under the multiple first columnar parts CL has a configuration in which the bottom portions of the semiconductor bodies **210**, which have substantially circular cross sections, are multiply connected to each other in the X-Y plane. In other words, the extension portion **210**B of the semiconductor body **210** has a configuration in which substantially circular patterns are connected to each other when viewed from above; and the side surface portion **210***s* at substantially the entire circumference of the outer perimeter portion is connected to the second semiconductor layer **132**. Also, a portion of the first sacrificial film **13***b* remains between the substantially circular patterns.

Although the extension portions **210**B of the semiconductor bodies **210** appear to be separated from each other in the cross section shown in FIG. **59**B, the extension portions **210**B of the semiconductor bodies **210** are linked at a not-illustrated portion. Also, a portion of the first sacrificial film **13***b* remains between the extension portions **210**B. In this cross section as well, the side surface portion **2105** of the extension portion **210**B is connected to the second semiconductor layer **132**.

According to the semiconductor device **100***d*, the second semiconductor layer **132** is connected to the common portion of the semiconductor bodies **210** provided inside the bottom portion LC under the multiple first columnar parts CL. Thereby, the operations of the semiconductor device **100***d* can be stabilized. For example, a p-n junction is formed at the side surface portion **210***s* of the semiconductor body **210** contacting the second semiconductor layer **132**; and a GIDL current (Gate Induced Drain Leakage current) can be generated when erasing the data stored in the memory cells MC.

For example, in a structure in which the second semiconductor layer **132** is connected separately to each of the bottom portions of the multiple first columnar parts CL, unless the connection portions between the second semiconductor layer **132** and the semiconductor bodies **210** are formed uniformly for the first columnar parts CL, diverse values of the GIDL current are supplied to the first columnar parts CL; and there is the case where the data erase cannot be performed simultaneously in the memory cells MC positioned along the first columnar parts CL.

In contrast, in the semiconductor device **100***d*, the GIDL current that is generated at the side surface portion **210***s* of the extension portion **210**B of the semiconductor body **210** is supplied substantially uniformly to the semiconductor bodies **210** of the first columnar parts CL sharing the extension portion **210**B. Therefore, it is possible to substantially uniformly supply the holes for the data erase to the memory cells MC arranged along each of the first columnar parts CL. Thereby, in the semiconductor device **100***d*, for example, the fluctuation of the data erasing characteristics is suppressed; and it is possible to realize a faster erase operation.

(Manufacturing Method)

A typical example of the method for manufacturing the semiconductor device **100***d* will now be described.

FIG. **60**A to FIG. **60**I are schematic cross-sectional views sequentially illustrating the manufacturing processes of the semiconductor device **100***d*. FIG. **60**A to FIG. **60**I are partial cross-sectional views showing a cross section along line LX**1**-LX**1** in FIG. **59**A.

As shown in FIG. **60**A, the first sacrificial film **13***b* is formed on the first semiconductor layer **131** with the intermediate film **136** interposed. The insulating layers **22** and the second sacrificial films **23** are stacked alternately on the insulating film **2***g* after forming the insulating film **2***g* on the first sacrificial film **13***b*. For example, silicon oxide is selected as the intermediate film **136**. For example, undoped silicon is selected as the first sacrificial film **13***b*. The insulating film **2***g* includes a material having resistance to the etching conditions of the processes of FIG. **60**C, FIG. **60**F, FIG. **60**G, and FIG. **60**I described below. For example, a metal oxide such as zinc oxide (ZnO) or the like is an example of such a material.

As shown in FIG. **60**B, the memory holes MH are formed by performing anisotropic etching of the second sacrificial films **23**, the insulating layers **22**, and the insulating film **2***g*. For example, the memory holes MH have depths that reach the first sacrificial film **13***b*.

As shown in FIG. **60**C, the bottom portions of the memory holes MH are caused to communicate with each other by performing isotropic etching of the first sacrificial film **13***b* via the memory holes MH. For example, an etchant including choline is used as the etchant of the isotropic etching process.

As shown in FIG. **60**D, the memory film **220** is formed inside the memory holes MH. The memory film **220** includes silicon nitride and silicon oxide. Continuing, the semiconductor body **210** is formed on the memory film **220**. The semiconductor body includes, for example, p-type doped silicon. Continuing, the core layer **230** is formed on the semiconductor body **210**. The core layer **230** includes, for example, silicon oxide. Thereby, the memory holes NIH

are filled with the semiconductor body **210**, the memory film **220**, and the core layer **230**, The semiconductor body **210**, the memory film **220**, and the core layer **230** fill the portion where the bottom portions of the memory holes MH communicate with each other at the level of the first sacrificial film **13***b*.

As shown in FIG. **60**E, the deep slits ST are formed by performing anisotropic etching of the second sacrificial films **23**, the insulating layers **22**, and the insulating film **2***g*.

As shown in FIG. **60**F, the first sacrificial film **13***b* is removed via the deep slits ST.

As shown in FIG. **60**G, the memory film **220** is removed via the deep slits ST. Thereby, the side surface portion **210***s* of the semiconductor body **210** is exposed. The intermediate film **136** also is etched when removing the memory film **220**; and an upper surface portion **131***u* of the first semiconductor layer **131** is exposed.

As shown in FIG. **60**H, the second semiconductor layer **132** is formed via the deep slits ST. The second semiconductor layer **132** is, for example, n-type silicon. The second semiconductor layer **132** is formed to cover the side surface portion **210***s* of the semiconductor body **210** and the upper surface portion **131***u* of the first semiconductor layer **131**.

As shown in FIG. **60**I, after replacing the second sacrificial films **23** with the conductive layers **21** via the deep slits ST, the plate portions **3** are formed by filling the deep slits ST with an insulator.

Although descriptions of the following processes are omitted, the semiconductor device **100***d* is manufactured according to a manufacturing method similar to that of the first embodiment, e.g., the manufacturing method described with reference to FIG. **31**A to FIG. **32**D. Thus, it is possible to manufacture the semiconductor device **100***d*.

In the semiconductor device **100***d* according to the embodiment, the multiple first columnar parts CL share the bottom portion LC, Thereby, for example, the strength of the portion supporting the stacked body **2** can be high after the first sacrificial film **13***b* is removed in the process shown in FIG. **60**F and FIG. **60**G, As a result, the collapse of the stacked body **2** can be avoided in the manufacturing processes of the semiconductor device **100***d*.

While certain embodiments have been described, these embodiments have been presented by way of example only, and are not intended to limit the scope of the inventions. Indeed, the novel embodiments described herein may be embodied in a variety of other forms; furthermore, various omissions, substitutions and changes in the form of the embodiments described herein may be made without departing from the spirit of the inventions. The accompanying claims and their equivalents are intended to cover such forms or modifications as would fall within the scope and spirit of the invention,

What is claimed is:

1. A nonvolatile semiconductor memory device comprising:

an underlying insulating layer provided above a substrate;

a source layer provided above the underlying insulating layer, the source layer including a conductive part and a semiconductor part above the conductive part;

a stacked body provided above the source layer, the stacked body including a plurality of first electrode layers and a plurality of first insulating layers interposed between two of the first electrode layers adjacent in a stacking direction respectively; and

a first columnar part piercing through the stacked body in the stacking direction, a lower end portion of the first columnar part being electrically connected to the source layer,

the first columnar part having a first width in a first direction perpendicular to the stacking direction inside the semiconductor part and a second width in the first direction inside a lowermost first insulating layer of the first insulating layers, the first width being larger than the second width.

2. The device according to claim **1**, wherein the semiconductor part includes a first semiconductor layer, a second semiconductor layer on the first semiconductor layer and a third semiconductor layer on the second semiconductor layer, and the first columnar part includes a semiconductor channel layer extending in the stacking direction through the stacked body and contacting the second semiconductor layer.

3. The device according to claim **2**, wherein the first columnar part has the first width in the first direction inside the third semiconductor layer of the semiconductor part.

4. The device according to claim **2**, wherein the first semiconductor layer includes an n-type semiconductor.

5. The device according to claim **1**, wherein the semiconductor part includes silicon.

6. The device according to claim **1**, wherein the conductive part includes tungsten.

7. The device according to claim **1**, wherein the first width is enlarged relative to the second width on both sides in the first direction.

8. The device according to claim **1**, wherein the first columnar part includes a semiconductor channel layer with a tubular configuration extending in the stacking direction and a core layer provided inside the semiconductor channel layer with the tubular configuration.

9. The device according to claim **8**, wherein the first columnar part further includes an insulating film covering a sidewall of the semiconductor channel layer.

10. The device according to claim **1**, wherein the first columnar part has a third width in the first direction inside a lowermost first electrode layer of the first electrode layers, the third width being less than the first width.

11. The device according to claim **10**, wherein the first columnar part forms a source-side select transistor at a crossing portion with the lowermost first electrode layer.

12. The device according to claim **1**, wherein the semiconductor channel layer has a tubular configuration and a core layer is provided inside the semiconductor channel layer having the tubular configuration.

13. The device according to claim **12**, wherein the first columnar part further includes an insulating film covering a sidewall of the semiconductor channel layer.

14. A nonvolatile semiconductor memory device comprising:

an underlying insulating layer provided above a substrate;

a source layer provided above the underlying insulating layer, the source layer including a conductive part and a semiconductor part above the conductive part;

a stacked body provided above the source layer, the stacked body including a plurality of first electrode layers and a plurality of first insulating layers interposed between two of the first electrode layers adjacent in a stacking direction respectively; and

a first columnar part piercing through the stacked body in the stacking direction, the first columnar part including a semiconductor channel layer which extends in the

stacking direction through the stacked body and of which a lower end portion is electrically connected to the source layer,

the semiconductor part including a first semiconductor layer, a second semiconductor layer and a third semiconductor layer, the second semiconductor layer contacting the first semiconductor layer and the semiconductor channel layer, the third semiconductor layer contacting the second semiconductor layer, and

the first columnar part having a first width in a first direction perpendicular to the stacking direction inside the third semiconductor layer and a second width in the first direction inside a lowermost first insulating layer of the first insulating layers, the first width being larger than the second width.

15. The device according to claim **14**, wherein the first semiconductor layer includes an n-type semiconductor.

16. The device according to claim **14**, wherein the first semiconductor layer, the second semiconductor layer and the third semiconductor layer include silicon.

17. The device according to claim **14**, wherein the conductive part includes tungsten.

18. The device according to claim **14**, wherein the first width is enlarged relative to the second width on both sides in the first direction.

19. The device according to claim **14**, wherein the first columnar part has a third width in the first direction inside a lowermost first electrode layer of the first electrode layers, the third width being less than the first width.

20. The device according to claim **19**, wherein the first columnar part forms a source-side select transistor at a crossing portion with the lowermost first electrode layer.

* * * * *