US 20250284073A1

(19) United States
(12) Patent Application Publication
AHN
(10) Pub. No.: US 2025/0284073 A1
(43) Pub. Date: Sep. 11, 2025

(54) **CHIP STRUCTURE AND SEMICONDUCTOR PACKAGE INCLUDING THE SAME**

(71) Applicant: **SAMSUNG ELECTRONICS CO., LTD.**, Suwon-si (KR)

(72) Inventor: **Seokgeun AHN**, Suwon-si (KR)

(73) Assignee: **SAMSUNG ELECTRONICS CO., LTD.**, Suwon-si (KR)

(21) Appl. No.: **19/024,882**

(22) Filed: **Jan. 16, 2025**

(30) **Foreign Application Priority Data**

Mar. 6, 2024 (KR) 10-2024-0032243

Publication Classification

(51) **Int. Cl.**

G02B 6/42	(2006.01)
H01L 23/31	(2006.01)
H01L 23/538	(2006.01)
H01L 25/16	(2023.01)

(52) **U.S. Cl.**

CPC ***G02B 6/4248*** (2013.01); ***G02B 6/4269*** (2013.01); ***H01L 25/167*** (2013.01); *H01L 23/3135* (2013.01); *H01L 23/5385* (2013.01); *H01L 2225/06541* (2013.01); *H01L 2225/06589* (2013.01)

(57) **ABSTRACT**

Provided is a chip structure including a redistribution structure, an electronic integrated circuit (EIC) chip on the redistribution structure, a photonic integrated circuit (PIC) chip on the EIC chip, the PIC chip including a first groove recessed inwards from an upper surface of the PIC chip and a side surface of the PIC chip, and a waveguide having a first end exposed externally to the chip structure through the first groove, and a connector on the PIC chip, the connector including a connector waveguide passing through an inside of a body, a refractive index of the connector being greater than a refractive index of the body, and a condensing portion on a side surface of the body, wherein the condensing portion is configured to condense optical signals incident on the condensing portion from the connector waveguide to the waveguide of the PIC chip.

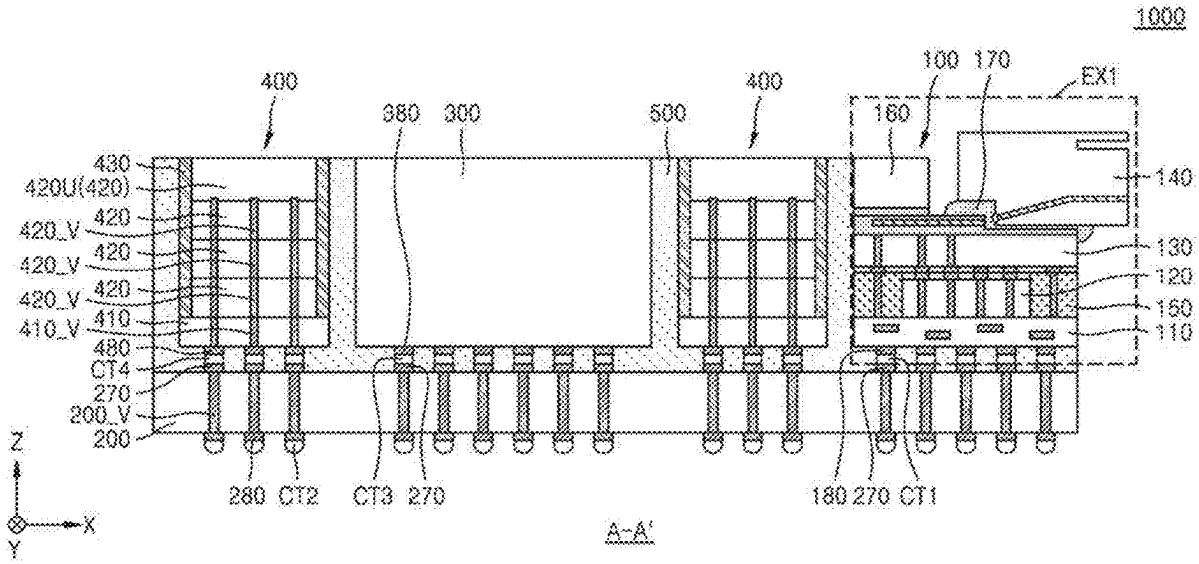

FIG. 1

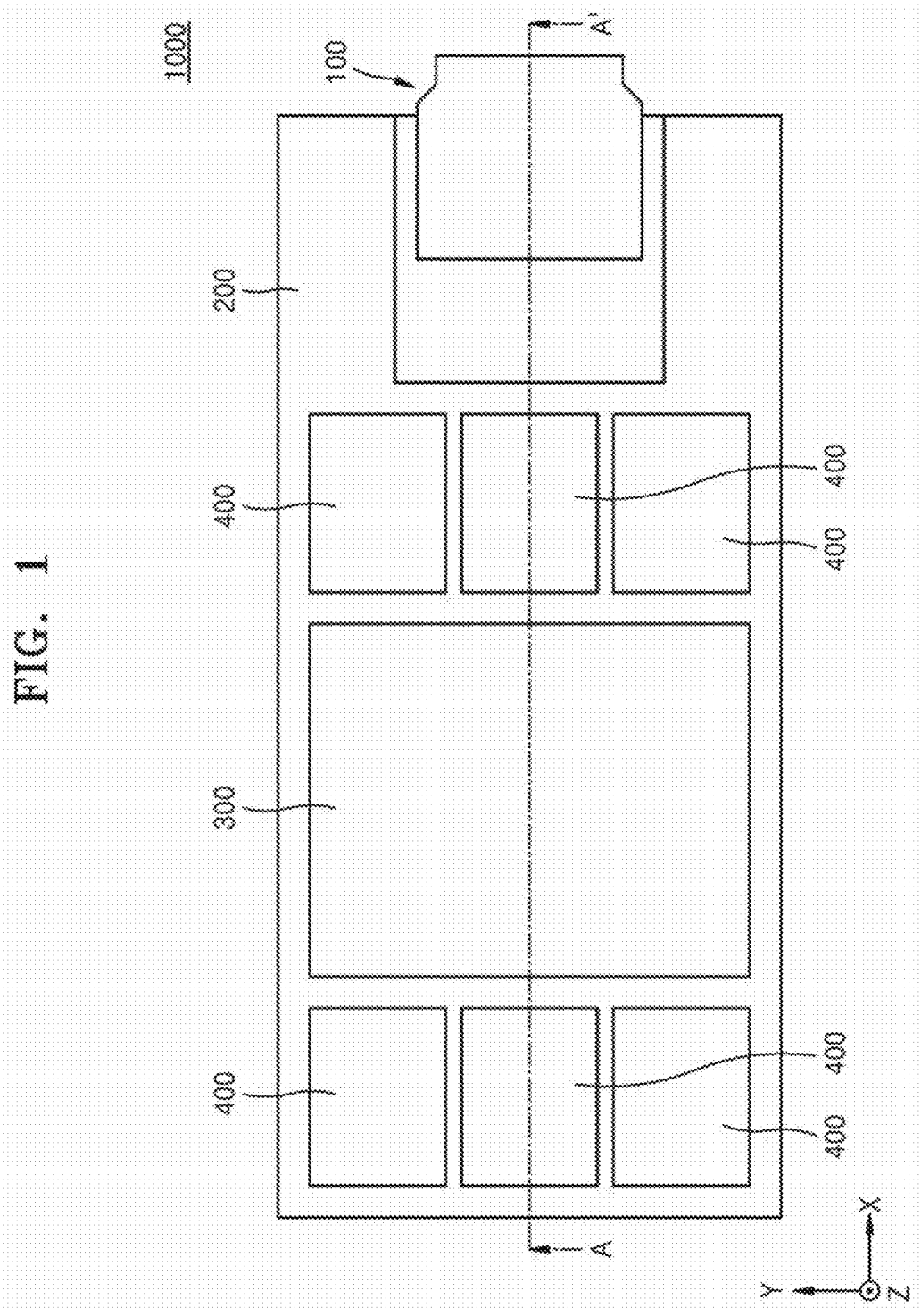

FIG. 2

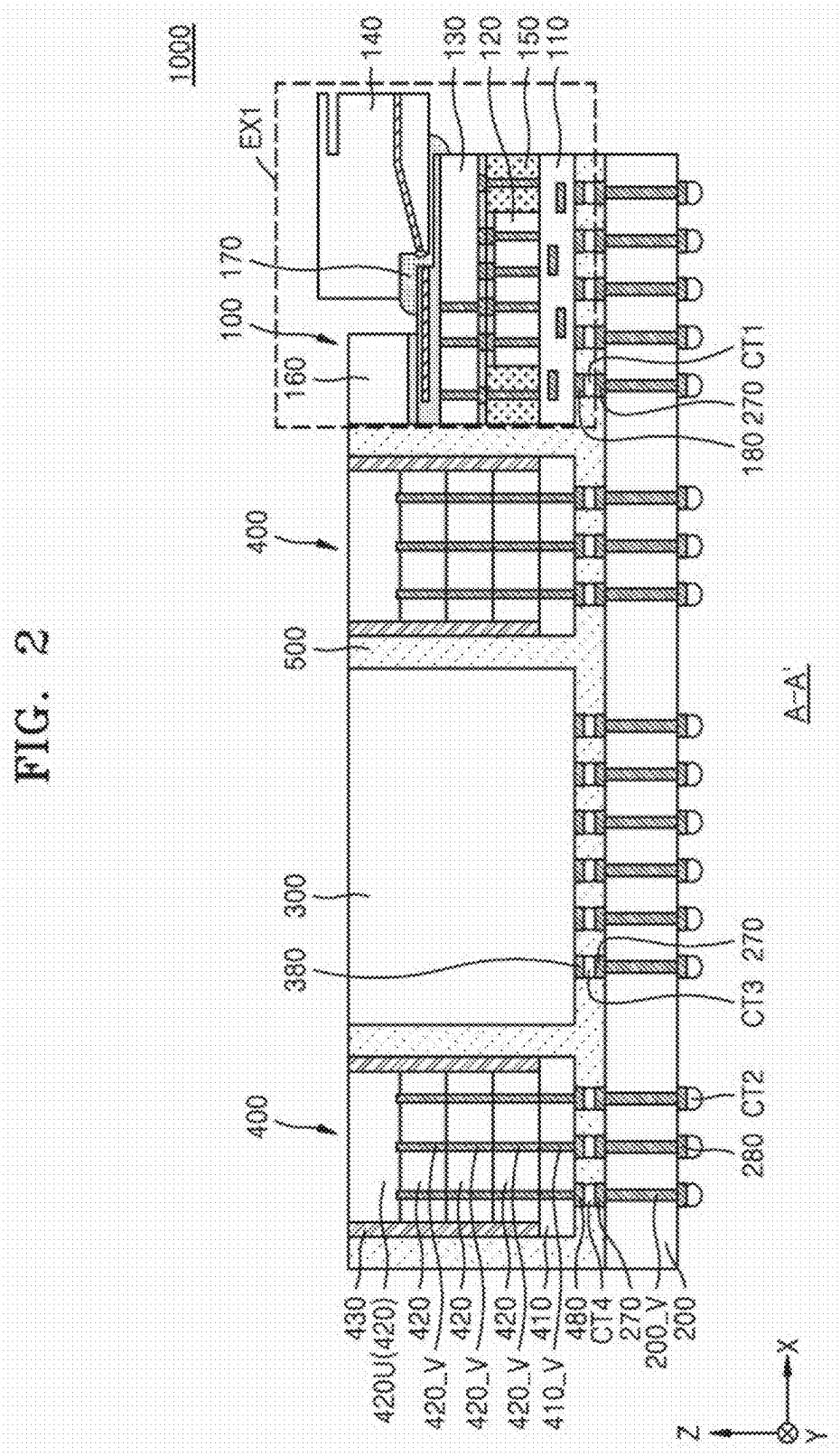
1000
EX1
140
130
120
150
110
170
100
160
180
270
CT1
400
500
300
380
CT3
CT2
280
430
420U(420)
420
420_V
410
410_V
480
CT4
200_V
200
A-A'
Z
X
Y

FIG. 3

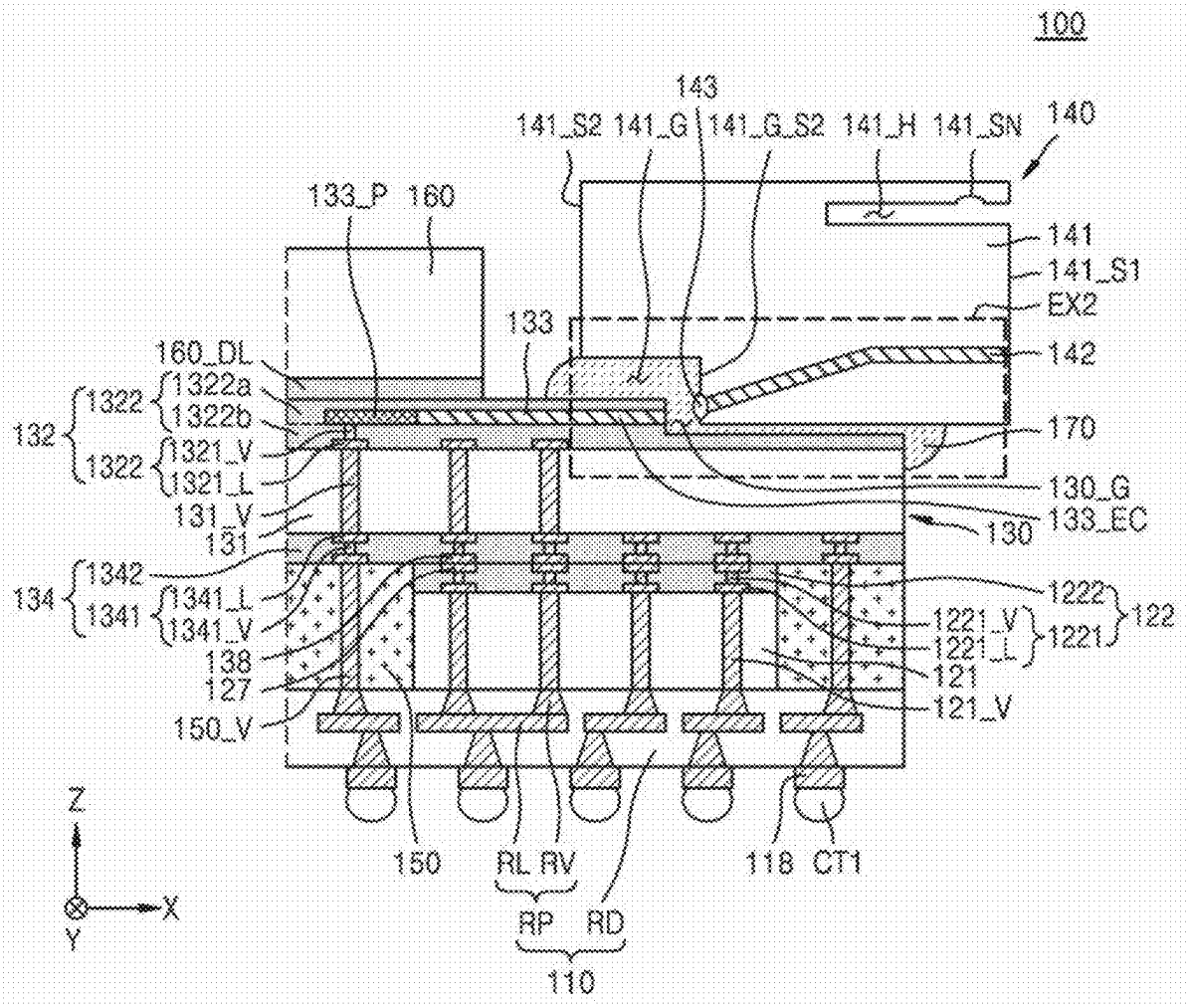
100
143
141_S2
141_G
141_G_S2
141_H
141_SN
140
133_P
160
141
141_S1
EX2
133
142
160_DL
1322a
1322b
132
1322
1322
1321_V
1321_L
170
130_G
131_V
133_EC
131
130
1342
1222
134
1341
1341_L
1341_V
1221_V
1221_L
1221
122
138
121
127
121_V
150_V
Z
X
Y
150
RL
RV
118
CT1
RP
RD
110

FIG. 4

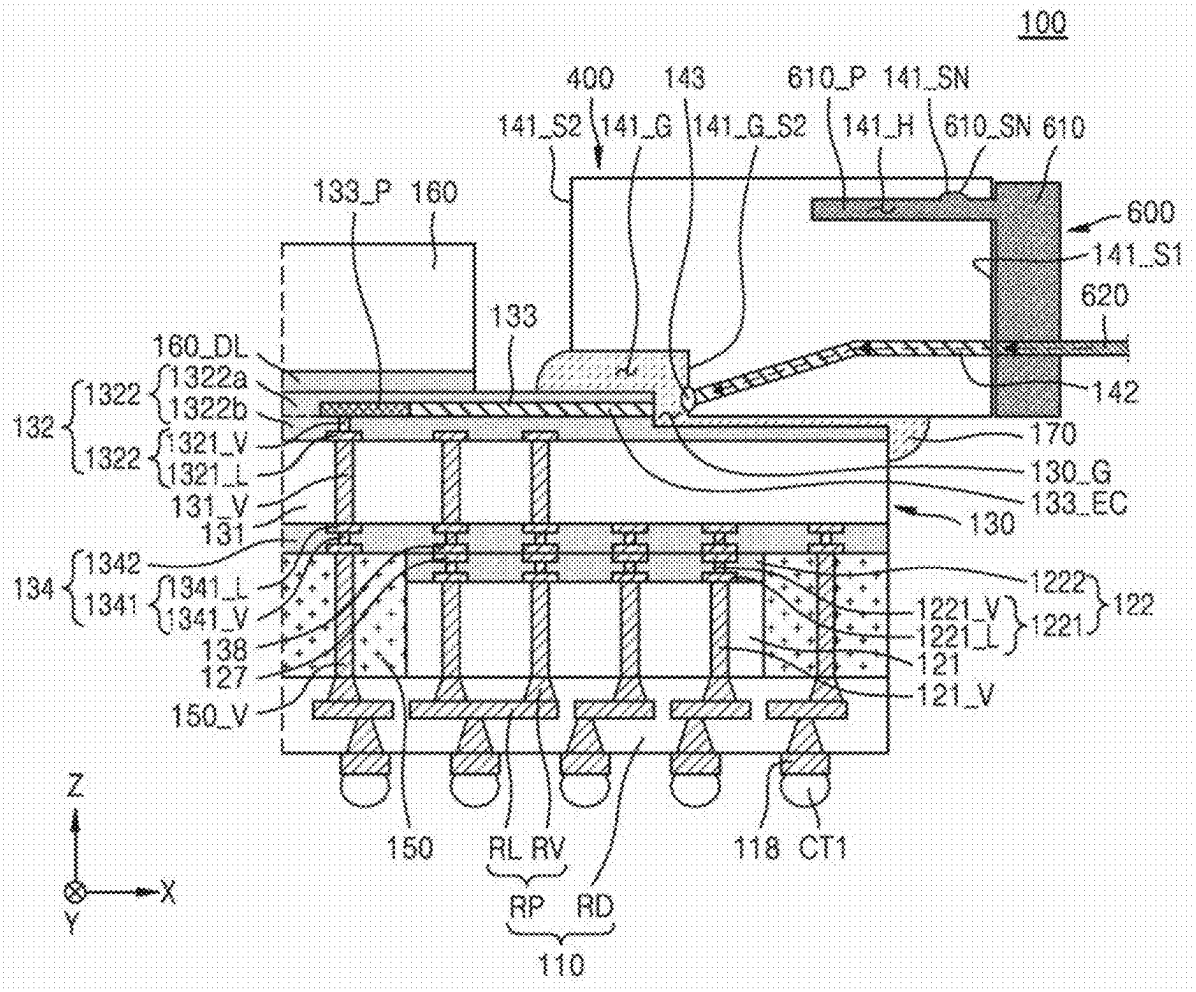
100
400
143
610_P
141_SN
141_S2
141_G
141_G_S2
141_H
610_SN
610
133_P
160
600
141_S1
620
133
160_DL
142
132
1322
1322a
1322b
1322
1321_V
1321_L
170
130_G
131_V
133_EC
131
130
134
1342
1341
1341_L
1341_V
1222
1221_V
1221_L
1221
122
138
121
127
121_V
150_V
Z
X
Y
150
RL
RV
118
CT1
RP
RD
110

FIG. 5

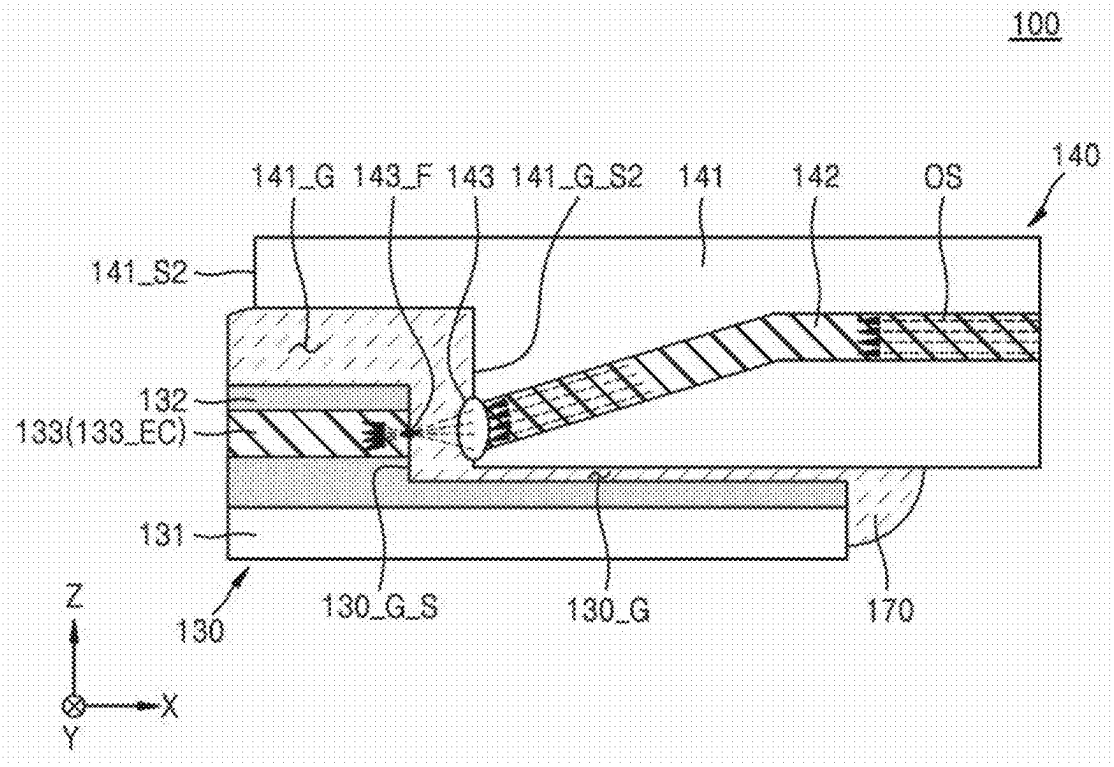
100
140
141_G
143_F
143
141_G_S2
141
142
OS
141_S2
132
133(133_EC)
131
130
130_G_S
130_G
170
Z
X
Y

FIG. 6

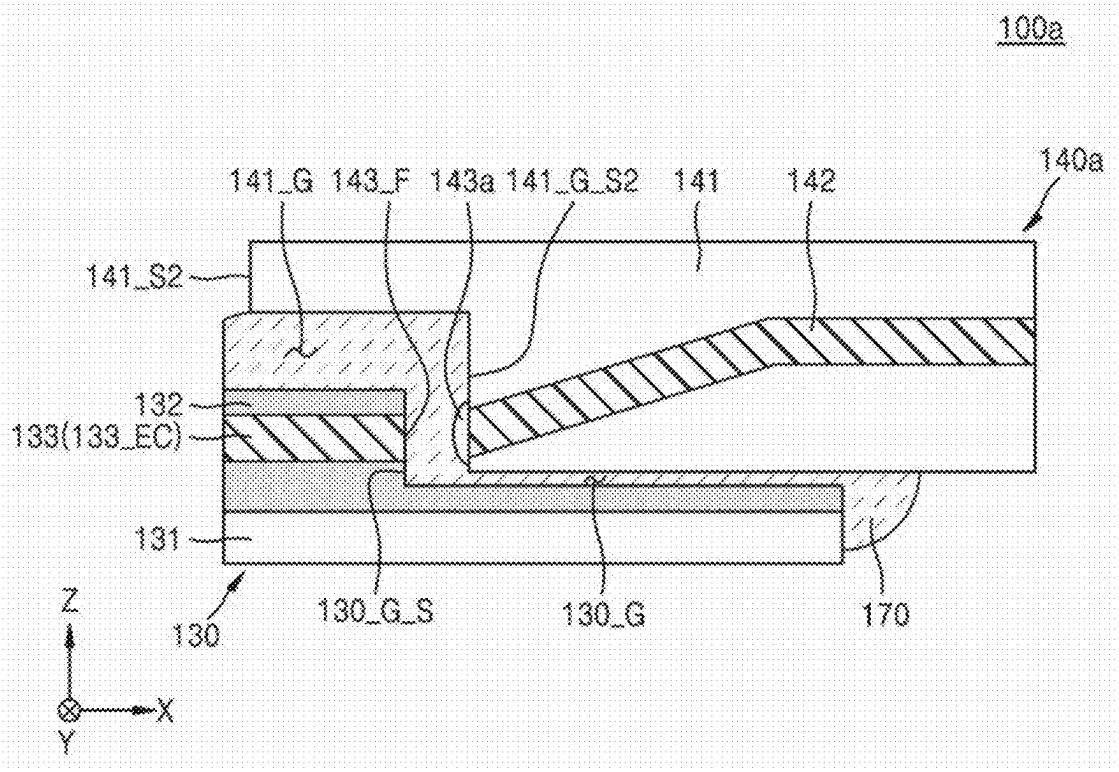
100a
140a
141_G
143_F
143a
141_G_S2
141
142
141_S2
132
133(133_EC)
131
130
130_G_S
130_G
170
Z
X
Y

FIG. 7

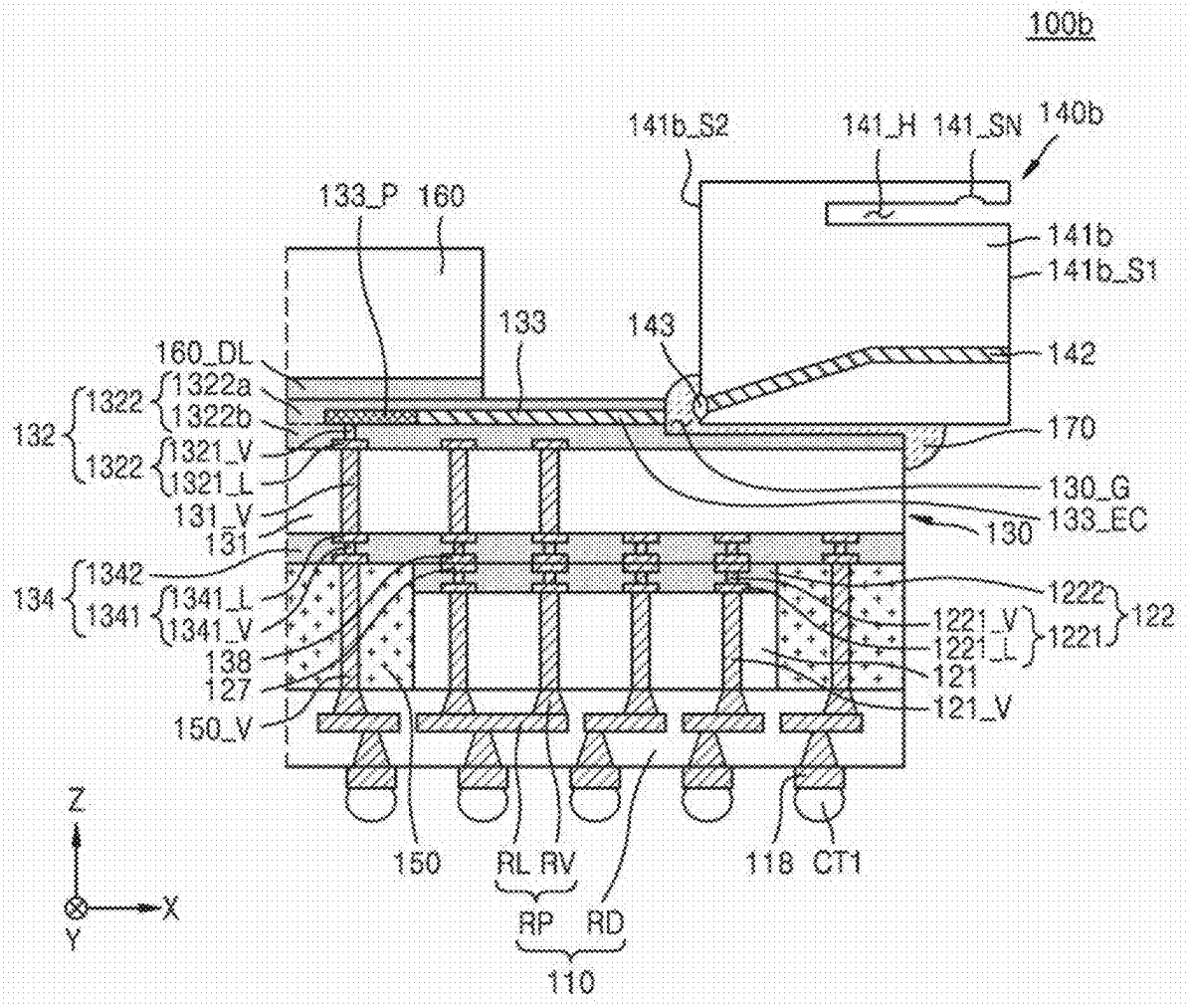
100b
141b_S2
141_H
141_SN
140b
133_P
160
141b
141b_S1
133
143
142
160_DL
1322a
1322b
132
1322
1321_V
1321_L
170
130_G
131_V
133_EC
131
130
134
1342
1341
1341_L
1341_V
1222
122
1221_V
1221_L
1221
138
121
127
121_V
150_V
Z
X
Y
150
RL
RV
118
CT1
RP
RD
110

FIG. 8

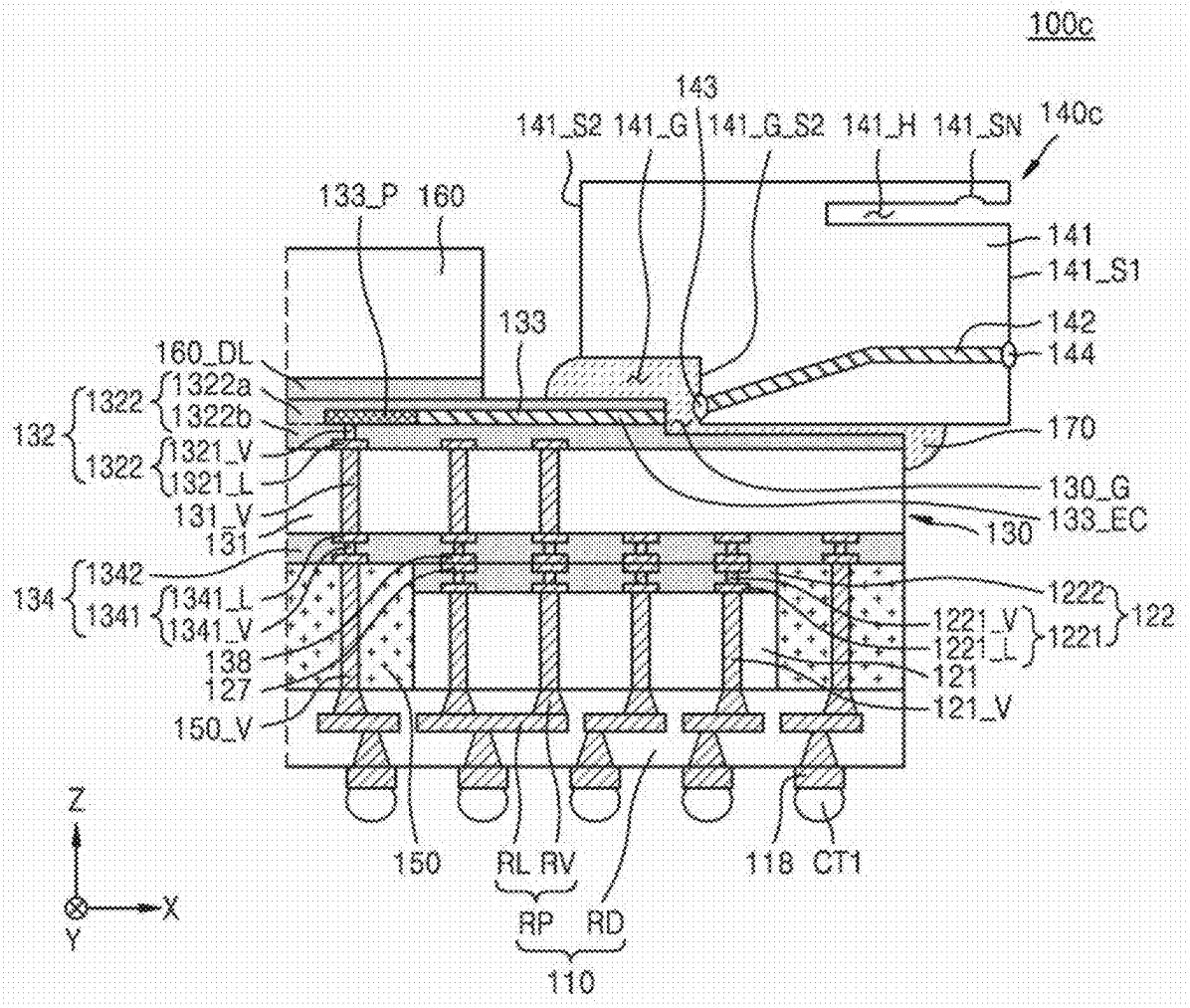
100c
143
141_S2
141_G
141_G_S2
141_H
141_SN
140c
133_P
160
141
141_S1
133
142
144
160_DL
1322a
1322b
1322
132
1322
1321_V
1321_L
170
130_G
131_V
133_EC
131
130
1342
1222
134
1341
1341_L
1341_V
1221_V
1221_L
1221
122
138
121
127
121_V
150_V
Z
X
Y
150
RL
RV
118
CT1
RP
RD
110

FIG. 9

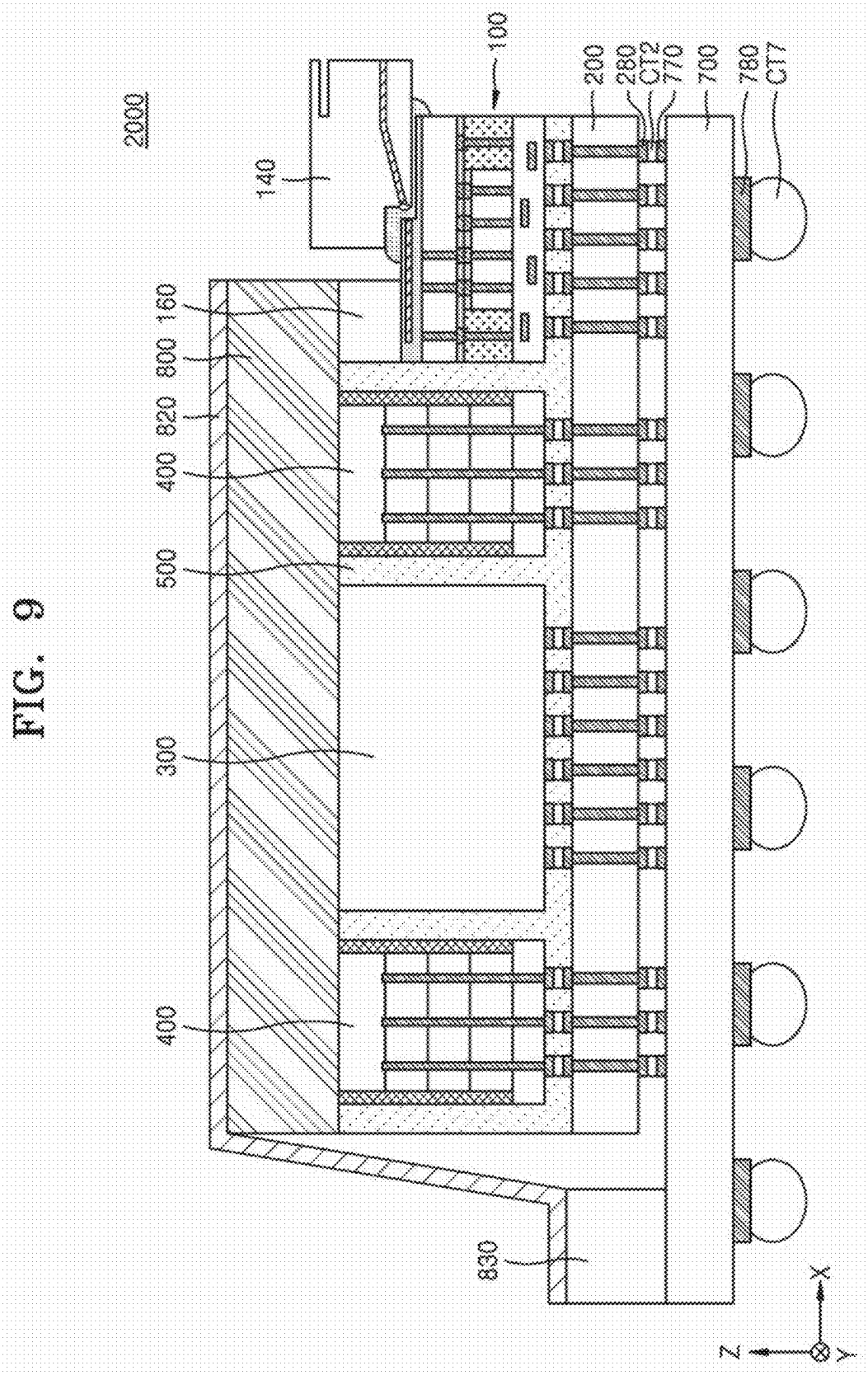
2000
140
100
200
280
CT2
770
700
780
CT7
160
800
820
400
500
300
400
830
X
Y
Z

CHIP STRUCTURE AND SEMICONDUCTOR PACKAGE INCLUDING THE SAME

CROSS-REFERENCE TO RELATED APPLICATION

[0001] This application claims priority to Korean Patent Application No. 10-2024-0032243, filed on Mar. 6, 2024, in the Korean Intellectual Property Office, the disclosure of which is incorporated by reference herein in its entirety.

BACKGROUND

1. Field

[0002] Embodiments of the present disclosure relate to a semiconductor package and a method of manufacturing the same, and more particularly, to a chip structure including a photonic integrated circuit chip, and a semiconductor package including the chip structure.

2. Description of Related Art

[0003] In order to enhance the functionality of electronic devices and integration of components, the advantages of a semiconductor package are often taken into consideration. In the semiconductor package, various integrated circuits such as memory chips or logic chips can be mounted on a package substrate. In recent years, research on semiconductor packages, including photonic integrated circuits, has continued in an environment where data traffic in data centers and communication infrastructure has considerably increased.

SUMMARY

[0004] One or more embodiments provide a chip structure in which optical fibers are separably bonded to each other and optical signals are condensed, and a semiconductor package including the chip structure.

[0005] One or more embodiments also provide a chip structure having a large tolerance when manufacturing thereof, and a semiconductor package including the chip structure.

[0006] Also, the objectives to be solved by the technical spirit are not limited to the objectives mentioned above, and other objectives can be understood by one of ordinary skill in the art from the following description.

[0007] According to an aspect of one or more embodiments, there is provided a chip structure including a redistribution structure, an electronic integrated circuit (EIC) chip on the redistribution structure, a photonic integrated circuit (PIC) chip on the EIC chip, the PIC chip including a first groove recessed inwards from an upper surface of the PIC chip and a side surface of the PIC chip, and a waveguide having a first end exposed externally to the chip structure through the first groove, and a connector on the PIC chip, the connector including a connector waveguide passing through an inside of a body, a refractive index of the connector being greater than a refractive index of the body, and a condensing portion on a side surface of the body, wherein the condensing portion is configured to condense optical signals incident on the condensing portion from the connector waveguide to the waveguide of the PIC chip.

[0008] According to another aspect of one or more embodiments, there is provided a semiconductor package including a package substrate, a semiconductor chip on the package substrate, a chip structure on the package substrate and spaced apart from the semiconductor chip, and a second molding layer on the package substrate and on the semiconductor chip and the chip structure, wherein the chip structure includes a redistribution structure on the package substrate, an electronic integrated circuit (EIC) chip on the redistribution structure, a photonic integrated circuit (PIC) chip on the EIC chip, the PIC chip including a first groove recessed inwards from an upper surface of the PIC chip and a side surface of the PIC chip, and a waveguide of which a first end is exposed externally to the semiconductor package through the first groove, and a connector on the PIC chip, the connector including a connector waveguide passing through an inside of a body, and a condensing portion contacting a first end of the connector waveguide, wherein the condensing portion is configured to condense optical signals incident on the condensing portion from the connector waveguide onto the waveguide of the PIC chip.

[0009] According to still another aspect of one or more embodiments, there is provided a semiconductor package including a package substrate, a semiconductor chip on the package substrate, a plurality of stack structures on the package substrate and spaced apart from the semiconductor chip, a chip structure on the package substrate and spaced apart from the semiconductor chip, a second molding layer on the package substrate, the semiconductor chip, and the chip structure, and a heat sink on the second molding layer, the semiconductor chip, and the plurality of stack structures, wherein the chip structure includes a redistribution structure on the package substrate, an electronic integrated circuit (EIC) chip on the redistribution structure, a first molding layer on the redistribution structure and the EIC chip, a photonic integrated circuit (PIC) chip on the EIC chip and the first molding layer, the PIC chip including a first groove recessed inwards from an upper surface of the PIC chip and a side surface of the PIC chip, and a waveguide having a first end is exposed externally to the semiconductor package through the first groove, a connector including a body on the PIC chip and configured to be separably bonded to an optical fiber module, a connector waveguide passing through the inside of the body, a refractive index of the connector waveguide being greater than a refractive index of the body, and a condensing portion at one side of the body and configured to condense optical signals emitted from the connector waveguide onto the waveguide of the PIC chip, and a dummy chip on the PIC chip, spaced apart from the connector, and below the heat sink in a vertical direction.

BRIEF DESCRIPTION OF DRAWINGS

[0010] Embodiments will be more clearly understood from the following detailed description taken in conjunction with the accompanying drawings in which:

[0011] FIG. **1** is a plan view schematically illustrating a semiconductor package according to one or more embodiments;

[0012] FIG. **2** is a cross-sectional view taken along a line A-A' of FIG. **1** and schematically illustrating the semiconductor package of FIG. **1**;

[0013] FIG. **3** is an enlarged view schematically illustrating a portion EX**1** of FIG. **2** of the semiconductor package of FIG. **2**;

[0014] FIG. **4** is a view schematically illustrating the chip structure of FIG. **3** and an optical fiber module bonded to the chip structure;

[0015] FIG. **5** is an enlarged view schematically illustrating a portion EX**2** of FIG. **3** of the chip structure of FIG. **3**;

[0016] FIG. **6** is an enlarged view schematically illustrating a part of a chip structure according to one or more embodiments;

[0017] FIG. **7** is a cross-sectional view schematically illustrating a chip structure according to one or more embodiments;

[0018] FIG. **8** is a cross-sectional view schematically illustrating a chip structure according to one or more embodiments; and

[0019] FIG. **9** is a cross-sectional view schematically illustrating a semiconductor package according to one or more embodiments.

DETAILED DESCRIPTION

[0020] Since various modifications and various embodiments are possible, example embodiments are illustrated in the drawings and described in detail in the detailed description. However, the disclosure is not limited thereto.

[0021] It will be understood that, although the terms first, second, third, fourth, etc. may be used herein to describe various elements, components, regions, layers and/or sections (collectively "elements"), these elements should not be limited by these terms. These terms are only used to distinguish one element from another element. Thus, a first element described in this description section may be termed a second element or vice versa in the claim section without departing from the teachings of the disclosure.

[0022] It will be understood that when an element or layer is referred to as being "over," "above," "on," "below," "under," "beneath," "connected to" or "coupled to" another element or layer, it can be directly over, above, on, below, under, beneath, connected or coupled to the other element or layer or intervening elements or layers may be present. In contrast, when an element is referred to as being "directly over," "directly above," "directly on," "directly below," "directly under," "directly beneath," "directly connected to" or "directly coupled to" another element or layer, there are no intervening elements or layers present.

[0023] As used herein, an expression "at least one of" preceding a list of elements modifies the entire list of the elements and does not modify the individual elements of the list. For example, an expression, "at least one of a, b, and c" should be understood as including only a, only b, only c, both a and b, both a and c, both b and c, or all of a, b, and c.

[0024] FIG. **1** is a plan view schematically illustrating a semiconductor package **1000** according to one or more embodiments. FIG. **2** is a cross-sectional view taken along a line A-A' of FIG. **1** and schematically illustrating the semiconductor package **1000** of FIG. **1**.

[0025] Referring to FIGS. **1** and **2**, the semiconductor package **1000** may include a package substrate **200**, a semiconductor chip **300**, a plurality of stack structures **400**, a second molding layer **500**, and a chip structure **100**.

[0026] Hereinafter, unless specifically defined, a direction that is in parallel to an upper surface of the package substrate **200** is defined as a first horizontal direction (X direction), and a direction that is perpendicular to the upper surface of the package substrate **200** is defined as a vertical direction (Z direction), and a direction that is perpendicular to the first horizontal direction (X direction) and the vertical direction (Z direction) is defined as a second horizontal direction (Y direction). A direction in which the first horizontal direction (X direction) and the second horizontal direction (Y direction) are synthesized with each other, is defined as a horizontal direction.

[0027] The package substrate **200** may be an interposer including a substrate and a through via **200**_V that perforates the substrate. For example, the package substrate **200** may be a glass interposer including a substrate formed of glass and the through via **200**_V that is a through glass via (TGV). However, embodiments are not limited thereto, and the package substrate **200** may be a silicon interposer including a substrate formed of silicon and the through via **200**_V that is a through silicon via (TSV).

[0028] In one or more embodiments, the package substrate **200** may be a printed circuit board (PCB) including a core insulating layer including at least one material selected from the group consisting of phenol resin, epoxy resin, and polyimide.

[0029] In one or more embodiments, the package substrate **200** may further include an upper pad **270** disposed on the upper surface of the package substrate **200** and a lower pad **280** disposed on a lower surface of the package substrate **200**. The upper pad **270** and the lower pad **280** may be electrically connected to each other by the through via **200**_V or internal distribution. For example, each of the upper pad **270** and the lower pad **280** may include copper (Cu), nickel (Ni), stainless steel or beryllium copper.

[0030] In one or more embodiments, connection terminals CT**2** may be attached to the lower pad **280** of the package substrate **200**. The connection terminals CT**2** may be configured to electrically and physically connect the package substrate **200** and an external device on which the package substrate **200** is mounted. The connection terminals CT**2** may be formed from, for example, solder balls or solder bumps.

[0031] The semiconductor chip **300** may be mounted on the package substrate **200**. The semiconductor chip **300** may include an active surface and an inactive surface facing the active surface. In one or more embodiments, the semiconductor chip **300** may include an application specific integrated circuit (ASIC).

[0032] In one or more embodiments, the semiconductor chip **300** may be mounted on the package substrate **200** so that the active surface of the semiconductor chip **300** may face the package substrate **200**. For example, the semiconductor chip **300** may have a face down method and may be arranged on the package substrate **200**.

[0033] In one or more embodiments, a variety of a plurality of individual devices may be disposed on the active surface of the semiconductor chip **300**. For example, the plurality of individual devices may include various micro electronic devices, for example, complementary metal-oxide semiconductor (CMOS) transistors, metal-oxide-semiconductor filed effect transistors (MOSFETs), system large scale integration (LSI), image sensors such as CMOS imaging sensors (CISs) or the like, micro-electro-mechanical systems (MEMSs), active devices, passive devices, or the like.

[0034] In one or more embodiments, the semiconductor chip **300** may further include a lower pad **380** formed on a lower surface of the semiconductor chip **300**. For example, the lower pad **380** of the semiconductor chip **300** may be electrically connected to a distribution structure formed on an active surface of the semiconductor chip **300**.

[0035] The lower pad **380** of the semiconductor chip **300** and the package substrate **200** may be electrically connected to each other by a connection terminal CT**3**. However, embodiments are not limited thereto, and the lower pad **380** of the semiconductor chip **300** and the package substrate **200** may be electrically connected to each other by an anisotropic film (ACF), a nonconductive film (NCF), direct bonding or hybrid bonding.

[0036] The plurality of stack structures **400** may be disposed on the package substrate **200**. For example, the plurality of stack structures **400** may be disposed adjacent to and to surround the semiconductor chip **300**. For example, the plurality of stack structures **400** may be disposed at both sides of the semiconductor chip **300**. The plurality of stack structures **400** may be electrically connected to the semiconductor chip **300** via the package substrate **200**.

[0037] Each of the plurality of stack structures **400** may include a buffer chip **410**, a plurality of core chips **420**, and a core molding layer **430**. The buffer chip **410** may be disposed at a bottom, and the plurality of core chips **420** may be stacked on the buffer chip **410** in a vertical direction (Z direction). The core molding layer **430** may be disposed on the buffer chip **410** and may surround the plurality of core chips **420**. For example, an upper surface of the core molding layer **430** may be coplanar with the upper surface of a top core chip **420**U. Thus, the upper surface of the top core chip **420**U may be exposed externally to the semiconductor package **1000**.

[0038] Each of the buffer chip **410** and the plurality of core chips **420** may include a semiconductor material, for example, silicon (Si) or germanium (Ge). However, embodiments are not limited thereto, and for example, each of the buffer chip **410** and the plurality of core chips **420** may include a compound semiconductor material such as silicon carbide (SiC), gallium arsenide (GaAs), indium arsenide (InAs), and indium phosphide (InP).

[0039] Each of the buffer chip **410** and the plurality of core chips **420** may include an active surface and an inactive surface facing the active surface. A semiconductor device including a plurality of various types of individual devices may be formed on the active surface of each of the buffer chip **410** and the plurality of core chips **420**. Each of the buffer chip **410** and the plurality of core chips **420** may include a well doped with impurities that is a conductive region. Each of the buffer chip **410** and the plurality of core chips **420** may have various device isolation structures such as a shallow trench isolation (STI) structure.

[0040] The plurality of individual devices of the buffer chip **410** may include various micro electronic devices, for example, CMOS transistors, MOSFETs, system LSI, image sensors such as CISs) or the like, MEMSs, active devices, passive devices, or the like.

[0041] The plurality of individual devices of each of the plurality of core chips **420** may include a memory cell. For example, the memory cell may be a nonvolatile memory cell such as flash memory, phase-change random access memory (PRAM), magnetoresistive random access memory (MRAM), ferroelectric random access memory (FeRAM) or resistive random access memory (RRAM). In one or more embodiments, the memory cell may be a volatile memory cell such as dynamic random access memory (DRAM) or static random access memory (SRAM).

[0042] The plurality of individual devices of the buffer chip **410** may be electrically connected to a conductive region of the buffer chip **410**, and the plurality of individual devices of each of the plurality of core chips **420** may be electrically connected to a conductive region of each of the plurality of core chips **420**. For example, the conductive region of the buffer chip **410** may include a conductive pattern and an insulating layer surrounding the conductive pattern. For example, the conductive region of each of the plurality of core chips **420** may be substantially identical to the conductive region of the buffer chip **410**.

[0043] In one or more embodiments, the buffer chip **410** may include a semiconductor chip that includes a serial-parallel conversion circuit and controls the plurality of core chips **420**, and the plurality of core chips **420** may be a memory chip including memory cells. For example, a stack structure including the buffer chip **410** and the plurality of core chips **420** may be referred to as a high bandwidth memory (HBM), and the buffer chip **410** may be referred to as an HBM controller die, and each of the plurality of core chips **420** may be referred to as a DRAM die.

[0044] In one or more embodiments, a core chip disposed at a top of the plurality of core chips **420** may be referred to as a top core chip **420**U. In FIG. **2**, each of the plurality of stack structures **400** illustrates a stack of four core chips, but the number of core chips included in the plurality of stack structures **400** is not limited thereto.

[0045] In one or more embodiments, a core chip excluding the top core chip **420**U of the plurality of core chips **420** may further include a through via **420**_V that extends inwards from an upper surface of the core chip **420**. The through via **420**_V of each of the plurality of core chips **420** may be electrically connected to the conductive region of each core chip **420**. However, embodiments are not limited thereto, and the top core chip **420**U may include a through via **420**_V.

[0046] Each of the plurality of core chips **420** may be electrically connected to an adjacent core chip or the buffer chip **410** through the through via **420**_V. Thus, the plurality of core chips **420** may be electrically connected to the package substrate **200** through the through via **420**_V. For example, the conductive region of the top core chip **420**U may be electrically connected to the package substrate **200** through the through via **420**_V of core chips stacked on lower parts of the stack structures in the vertical direction (Z direction).

[0047] In one or more embodiments, a thickness of each of the plurality of core chips **420**, i.e., a length of each core chip **420** in the vertical direction (Z direction), may be about 20 μm to 80 μm. The thickness of each of the plurality of core chips **420** may have substantially the same value.

[0048] In one or more embodiments, a lower pad **480** may be disposed at a lower surface of the buffer chip **410**. The lower pad **480** of the buffer chip **410** may be electrically connected to the through via **410**_V of the buffer chip **410** or a distribution structure of the buffer chip **410**.

[0049] The lower pad **480** of the buffer chip **410** and the upper pad **270** of the package substrate **200** may be electrically connected to each other by a connection terminal CT**4**. However, embodiments are not limited thereto, and the lower pad **480** of the buffer chip **410** and the package substrate **200** may be electrically connected to each other by an ACF, an NCF, direct bonding or hybrid bonding.

[0050] The chip structure **100** may be disposed on the package substrate **200**. For example, the chip structure **100** may be disposed in an edge region of the package substrate

200. For example, one side surface of the redistribution structure **110** of the chip structure **100** may be on the same plane as a side surface of the package substrate **200**. In a process of manufacturing the semiconductor package **1000**, a dicing process of the semiconductor package **1000** may be performed based on a part of the chip structure **100**, and the chip structure **100** may be disposed in the edge region of the package substrate **200**.

[0051] In FIG. **1**, the chip structure **100** is shown to be spaced apart from the semiconductor chip **300** with the plurality of stack structures **400** therebetween, but the arrangement of the chip structure **100** is not limited thereto.

[0052] The chip structure **100** may perform a procedure in which the semiconductor package **1000** communicates with an external source via optical signals. The chip structure **100** may receive the optical signals from the external source, convert the received optical signals into electrical signals, and may transmit the electrical signals to the semiconductor chip **300** and the plurality of stack structures **400** via the package substrate **200**. In addition, the chip structure **100** may receive the electrical signals from the semiconductor chip **300** and the plurality of stack structures **400**, may convert the received electrical signals into optical signals and may transmit the optical signals to the external source.

[0053] The chip structure **100** is described in detail with reference to FIGS. **3** through **5**.

[0054] The second molding layer **500** may be disposed on the package substrate **200** and may surround the semiconductor chip **300**, the plurality of stack structures **400**, and the chip structure **100**. For example, the second molding layer **500** may be in contact with a side surface of the semiconductor chip **300**, side surfaces of the plurality of stack structures **400**, and a side surface of the chip structure **100**. The second molding layer **500** may protect the semiconductor chip **300**, the plurality of stack structures **400**, and the chip structure **100** from the outside of the semiconductor package **1000**.

[0055] An upper surface of the second molding layer **500** may be coplanar with an upper surface of the semiconductor chip **300**, upper surfaces of the plurality of stack structures **400**, and an upper surface of the dummy chip **160** of the chip structure **100**. The upper surface of the semiconductor chip **300**, an upper surface of the top core chip **420**U of the plurality of stack structures **400**, and the upper surface of the dummy chip **160** of the chip structure **100** may be exposed externally to the semiconductor package **1000**.

[0056] In one or more embodiments, a boundary surface between the second molding layer **500** and the core molding layer **430** of the plurality of stack structures **400** may be formed. In one or more embodiments, even when the configuration materials of the second molding layer **500** and the core molding layer **430** are the same, a boundary surface between the second molding layer **500** and the core molding layer **430** may be formed. For example, the second molding layer **500** and the core molding layer **430** may have different curing points of time so that a boundary surface between the second molding layer **500** and the core molding layer **430** may be formed.

[0057] In one or more embodiments, a boundary surface between the second molding layer **500** and the first molding layer **150** of the chip structure **100** may be formed. In one or more embodiments, even when the configuration materials of the second molding layer **500** and the first molding layer **150** are the same, a boundary surface between the second molding layer **500** and the first molding layer **150** may be formed. For example, the second molding layer **500** and the first molding layer **150** may have different curing points of time so that a boundary surface between the second molding layer **500** and the first molding layer **150** may be formed.

[0058] In one or more embodiments, the second molding layer **500** may include, for example, epoxy resin, polyimide resin, or the like. The second molding layer **500** may include, for example, an epoxy molding compound (EMC).

[0059] FIG. **3** is an enlarged view schematically illustrating a portion EX**1** of FIG. **2** of the semiconductor package **1000** of FIG. **2**. FIG. **4** is a view schematically illustrating the chip structure **100** of FIG. **3** and an optical fiber module **600** bonded to the chip structure **100**. FIG. **5** is an enlarged view schematically illustrating a portion EX**2** of FIG. **3** of the chip structure **100** of FIG. **3**.

[0060] Referring to FIGS. **3** through **5**, the chip structure **100** may include a redistribution structure **110**, an electronic integrated circuit (EIC) chip **120**, a first molding layer **150**, a photonic integrated circuit (PIC) chip **130**, a connector **140**, and a dummy chip **160**.

[0061] The redistribution structure **110** may be disposed on the package substrate **200**. The redistribution structure **110** may include a redistribution pattern RP and a redistribution dielectric layer RD that surrounds the redistribution pattern RP. The redistribution dielectric layer RD may include an insulating material, for example, a photo imagable dielectric (PID) resin. In one or more embodiments, the redistribution dielectric layer RD may further include an inorganic filler. In one or more embodiments, the redistribution dielectric layer RD may have a multi-layered structure in which a redistribution pattern is arranged on each layer.

[0062] The redistribution pattern RP may include a redistribution line RL that extends in a horizontal direction, and a redistribution via RV that extends from the redistribution line RL in the vertical direction (Z direction). The redistribution line RL may be arranged on at least one surface of an upper surface and a lower surface of the redistribution dielectric layer RD or inside the redistribution dielectric layer RD. The redistribution via RV may pass through the redistribution dielectric layer RD to be connected to a part of the redistribution line RL.

[0063] The redistribution pattern RP may include a conductive material, for example, Cu, aluminum (Al), silver (Ag), tin (Sn), gold (Au), Ni, lead (Pb), titanium (Ti), or an alloy thereof.

[0064] In one or more embodiments, as the redistribution via RV approaches the EIC chip **120**, a first horizontal direction (X direction) width and/or a second horizontal direction (Y direction) width of the redistribution via RV may be gradually decreased. For example, the horizontal area of the redistribution via RV may be decreased towards the EIC chip **120**.

[0065] The EIC chip **120** may be disposed on the redistribution structure **110**. The EIC chip **120** may be configured to interconnect the PIC chip **130** and the semiconductor chip (see **300** of FIG. **1**) to each other. For example, the EIC chip **120** may convert electrical signals so that electrical signals converted by the PIC chip **130** may match with the semiconductor chip (see **300** of FIG. **1**).

[0066] In one or more embodiments, an area of the EIC chip **120** may be less than an area of the redistribution

structure **110** in the horizontal directions (X and Y directions). For example, the side surface of the EIC chip **120** may be disposed on the upper surface of the redistribution structure **110**. A part of the redistribution structure **110** may not be covered by the EIC chip **120**.

[0067] The EIC chip **120** may include a first substrate **121**, a first through via **121**_V, and a first distribution structure **122**. The first substrate **121** of the EIC chip **120** may include an active surface and an inactive surface facing the active surface. The first distribution structure **122** may be formed on the active surface of the first substrate **121**. The first through via **121**_V may extend from the upper surface of the first substrate **121** to the lower surface of the first substrate **121**. The first through via **121**_V may be electrically connected to the plurality of individual devices on the first distribution structure **122** and/or the active surface of the first substrate **121**.

[0068] In one or more embodiments, the first substrate **121** may include a semiconductor material such as silicon (Si). However, embodiments are not limited thereto, and for example, the first substrate **121** may include a semiconductor material such as germanium (Ge).

[0069] In one or more embodiments, the EIC chip **120** may include a plurality of individual devices used to interconnect the PIC chip **130** and the semiconductor chip (see **300** of FIG. **1**). The plurality of individual devices of the EIC chip **120** may be disposed on the active surface of the first substrate **121**. For example, the EIC chip **120** may include CMOS drivers, transimpedance amplifiers, or the like so as to perform functions such as controlling high frequency signaling of the PIC chip **130**.

[0070] The first distribution structure **122** may include a first distribution pattern **1221** and a first distribution dielectric layer **1222** that surrounds the first distribution pattern **1221**. The first distribution pattern **1221** may include a first distribution line **1221**_L that extends in the horizontal direction, and a first distribution via **1221**_V that extends from the first distribution line **1221**_L in the vertical direction (Z direction). The first distribution pattern **1221** may be electrically connected to the plurality of individual devices and the lower pad **128**.

[0071] In one or more embodiments, the EIC chip **120** may be arranged on the redistribution structure **110** so that the active surface of the first substrate **121** may be directed toward the PIC chip **130**. For example, the EIC chip **120** may have a face up method and may be arranged on the redistribution structure **110**.

[0072] The first through via **121**_V may be electrically connected to the redistribution pattern RP of the redistribution structure **110**. For example, the first through via **121**_V may be configured to electrically connect the redistribution pattern RP of the redistribution structure **110** and the first distribution structure **122** to each other.

[0073] The EIC chip **120** may further include an upper pad **127**. For example, the upper pad **127** may be a region that is not covered by the first distribution dielectric layer **1222** of the first distribution pattern **1221** disposed on a top but is exposed externally to the semiconductor package **1000**.

[0074] The first molding layer **150** may be disposed on the redistribution structure **110** and may surround the EIC chip **120**. The first molding layer **150** may be configured to cover a side surface of the EIC chip **120**. For example, the sum of the area of the lower surface of the EIC chip **120** and the area of the lower surface of the first molding layer **150** may be the same as the area of the upper surface of the redistribution structure **110**.

[0075] In one or more embodiments, the side surface of the first molding layer **150**, the side surface of the redistribution structure **110**, and the side surface of the PIC chip **130** may be coplanar with each other.

[0076] In one or more embodiments, the chip structure **100** may further include a mold through via **150**_V that passes through the first molding layer **150**. The mold through via **150**_V may extend from the upper surface of the first molding layer **150** to the lower surface of the first molding layer **150**. The mold through via **150**_V may be configured to electrically connect the redistribution structure **110** and the PIC chip **130** to each other. In one or more embodiments, the mold through via **150**_V may be spaced apart from the EIC chip **120** in the horizontal direction.

[0077] In one or more embodiments, the redistribution structure **110** may further include a lower pad **118** disposed at the lower surface of the redistribution structure **110**. The lower pad **118** may be electrically connected to the redistribution pattern RP of the redistribution structure **110**.

[0078] In one or more embodiments, connection terminals CT**1** may be attached to the lower pad **118** of the redistribution structure **110**. The connection terminals CT**1** may be configured to electrically and physically connect the chip structure **100** and the package substrate (see **200** of FIG. **2**) on which the chip structure **100** is mounted, to each other. The connection terminals CT**1** may be formed from solder balls or solder bumps, for example. However, a method of mounting the chip structure **100** on the package substrate (see **200** of FIG. **2**) is not limited thereto.

[0079] The PIC chip **130** may be disposed on the EIC chip **120**. For example, the PIC chip **130** may be disposed on the EIC chip **120** and the first molding layer **150**.

[0080] The PIC chip **130** may include a second substrate **131**, an upper distribution structure **132**, a lower distribution structure **134**, a waveguide **133**, and a photonic component **133**_P. For example, the upper distribution structure **132** and the waveguide **133** may be disposed on the upper surface of the second substrate **131**. The lower distribution structure **134** may be disposed on the lower surface of the second substrate **131**.

[0081] For example, the PIC chip **130** may include a second through via **131**_V that extends from the upper surface to the lower surface of the second substrate **131**. The second through via **131**_V may be configured to electrically connect the upper distribution structure **132** and the lower distribution structure **134** to each other.

[0082] In one or more embodiments, the second substrate **131** may include a semiconductor material such as Si. However, embodiments are not limited thereto, and for example, the second substrate **131** may include a semiconductor material such as Ge.

[0083] The lower distribution structure **134** may include a lower distribution pattern **1341**, and a lower distribution dielectric layer **1342** that surrounds the lower distribution pattern **1341**. The lower distribution pattern **1341** may include a lower distribution line **1341**_L that extends in the horizontal direction, and a lower distribution via **1341**_V that extends from the lower distribution line **1341**_L in the vertical direction (Z direction). The lower distribution pattern **1341** may be electrically connected to a second through via **134**_V and the mold through via **150**_V.

[0084] The PIC chip **130** may further include a lower pad **138**. For example, the lower pad **138** may be a region that is not covered by the lower distribution dielectric layer **1342** of the lower distribution pattern **1341**_L disposed on a bottom but is exposed externally to the semiconductor package **1000**.

[0085] The lower distribution structure **134** of the PIC chip **130** and the first distribution structure **122** of the PIC chip **120** may be electrically connected to each other. In one or more embodiments, the lower pad **138** of the PIC chip **130** and the upper pad **127** of the EIC chip **120** may be diffused and bonded to each other by heat and thus may be formed as one body. While the lower pad **138** and the upper pad **127** are diffused and bonded to each other, the lower distribution dielectric layer **1342** of the lower distribution structure **134** and the first distribution dielectric layer **1222** of the first distribution structure **122** may be diffused and bonded to each other by heat and may be formed as one body. The PIC chip **130** and the EIC chip **120** may be bonded to each other by using a hybrid bonding method.

[0086] However, a method of bonding the PIC chip **130** and the EIC chip **120** is not limited thereto, and the PIC chip **130** and the EIC chip **120** may be electrically connected to each other by using an ACF, an NCF, or a connection terminal.

[0087] The upper distribution structure **132** may include an upper distribution pattern **1321**, and an upper distribution dielectric layer **1322** that surrounds the upper distribution pattern **1321**. The upper distribution pattern **1321** may include an upper distribution line **1321**_L that extends in the horizontal direction, and an upper distribution via **1321**_V that extends from the upper distribution line **1321**_L in the vertical direction (Z direction). The upper distribution pattern **1321** may be electrically connected to the second through via **131**_V and the photonic component **133**_P.

[0088] The upper distribution dielectric layer **1322** may include a first upper distribution dielectric layer **1322***b* and a second upper distribution dielectric layer **1322***a*. In one or more embodiments, the first upper distribution dielectric layer **1322***b* may be an oxide layer such as silicon oxide or the like. The second upper distribution dielectric layer **1322***a* may be a dielectric layer including one or more layers such as silicon oxide, silicon nitride, or a combination thereof. In one or more embodiments, the configuration material of the first upper distribution dielectric layer **1322***b* and the second upper distribution dielectric layer **1322***a* may be the same.

[0089] The waveguide **133** may be a patterned silicon layer and may extend from the first upper distribution dielectric layer **1322***b* in the horizontal direction. For example, the waveguide **133** may be buried in the upper distribution dielectric layer **1322**. For example, the waveguide **133** may be disposed on the first upper distribution dielectric layer **1322***b* and may be covered by the second upper distribution dielectric layer **1322***a*.

[0090] In one or more embodiments, the waveguide **133** may be a silicon waveguide including Si, and the upper distribution dielectric layer **1322** may be a buried oxide (BOX) layer. However, embodiments are not limited thereto, and the waveguide **133** may be covered by an oxide layer isolated from the upper distribution dielectric layer **1322**.

[0091] The waveguide **133** may be connected to the photonic component **133**_P. The photonic component **133**_P may convert optical signals OS into electrical signals and electrical signals into optical signals OS. In one or more embodiments, the photonic component **133**_P may include a photodetector, a laser diode, and a modulator.

[0092] While the optical signals OS are input to the chip structure **100**, the photodetector may detect the optical signals OS input to the PIC chip **130**. The PIC chip **130** may detect the optical signals OS input through the photodetector to convert the optical signals OS into electrical signals.

[0093] While the chip structure **100** outputs the optical signals OS, the EIC chip **120** may transmit the electrical signals to the modulator. The modulator may input signals corresponding to the received electrical signals to a laser emitted by a laser diode and convert the laser emitted by the laser diode into the optical signals OS.

[0094] The PIC chip **130** may include a first groove **130**_G. The first groove **130**_G may be recessed to the inside of the PIC chip **130** from the upper surface and the side surface of the PIC chip **130**. For example, the inside of the first groove **130**_G may be open to the side surface of the PIC chip **130**. In one or more embodiments, the first groove **130**_G may be referred to as a V-groove.

[0095] The first groove **130**_G may be adjacent to the waveguide **133**. For example, one end of the waveguide **133** may be exposed externally to the semiconductor package **1000** by the first groove **130**_G. The waveguide **133** may include an edge coupler **133**_EC. The edge coupler **133**_EC may be disposed on one end of the waveguide **133** exposed to the first groove **130**_G. The PIC chip **130** may input/output the optical signals OS to/from the outside through the edge coupler **133**_EC of the waveguide **133**.

[0096] In one or more embodiments, the vertical level of the bottom surface of the first groove **130**_G may be lower than the vertical level of the waveguide **133** in the vertical direction (Z direction). In FIG. **3**, the first groove **130**_G is formed in the upper redistribution structure **110** but may be formed in the upper redistribution structure **110** and the second substrate **131** according to a depth of the first groove **130**_G, for example, a length of the first groove **130**_G in the vertical direction (Z direction).

[0097] A connector **140** may be disposed on the PIC chip **130**. For example, the connector **140** may be disposed in the first groove **130**_G of the PIC chip **130**. In one or more embodiments, a part of the connector **140** may protrude externally to the semiconductor package **1000** of the PIC chip **130**.

[0098] In one or more embodiments, a transparent adhesive member **170** may be disposed between the connector **140** and the PIC chip **130**. The connector **140** may be attached to the PIC chip **130** by using the transparent adhesive member **170**. For example, the transparent adhesive member **170** may be disposed in the first groove **130**_G of the PIC chip **130** and the second groove **141**_G of the body **141** of the connector **140**.

[0099] An optical fiber module **600** may be separably bonded to the connector **140**. FIG. **3** illustrates that the connector **140** and the optical fiber module **600** are separated from each other, and FIG. **4** illustrates a case where the connector **140** and the optical fiber module **600** are bonded to each other.

[0100] The connector **140** may include a body **141**, a connector waveguide **142**, and a condensing portion **143**.

[0101] The body **141** may include a first side surface **141**_S1 and a second side surface **141**_S2. The first side surface **141**_S1 of the body **141** may face the second side surface **141**_S2 of the body **141**. At least a part of the second

side surface **141**_S2 of the body **141** may be disposed inside the first groove **130**_G of the PIC chip **130**. For example, a part of the second side surface **141**_S2 of the body **141** may face one end of the waveguide **133** of the PIC chip **130**.

[0102] In one or more embodiments, the body **141** may further include a second groove **141**_G. The second groove **141**_G may be recessed to the inside of the body **141** from the side surface and the lower surface of the body **141**. The second groove **141**_G may be disposed at the second side surface **141**_S2 of the body **141**.

[0103] For example, a portion that defines the side surface **141**_G_S2 of the second groove **141**_G of the second side surface **141**_S2 of the body **141** may face the side surface **130**_G_S of the first groove **130**_G of the PIC chip **130**. For example, the second groove **141**_G of the body **141** may be disposed above the PIC chip **130**, and the first groove **130**_G of the PIC chip **130** may be disposed below the connector **140**.

[0104] The body **141** may be configured to be separably bonded to the optical fiber module **600**. As shown in FIG. **4**, the optical fiber module **600** may be bonded to the first side surface **141**_S1 of the body **141**.

[0105] In one or more embodiments, the body **141** may include a coupling groove **141**_H that extends inwards from the first side surface **141**_S1 of the body **141**, and an inner groove **141**_SN formed in an inner wall of the coupling groove **141**_H. A frame **610** of the optical fiber module **600** may include a protrusion **610**_P configured to be inserted into the coupling groove **141**_H, and a coupling hook **610**_SN formed at an outer wall of the protrusion **610**_P. When the protrusion **610**_P of the frame **610** is inserted into the coupling groove **141**_H of the body **141**, the coupling hook **610**_SN and the inner groove **141**_SN may be configured in such a way that the coupling hook **610**_SN may be inserted into the inner groove **141**_SN.

[0106] For example, the optical fiber module **600** and the body **141** may be separably bonded to each other by using a snap-fit method. For example, the coupling hook **610**_SN may be inserted into the inner groove **141**_SN or the coupling hook **610**_SN may be separated from the inner groove **141**_SN by using an elastic force of the coupling hook **610**_SN.

[0107] In one or more embodiments, the optical fiber module **600** may further include a manipulation button configured to manipulate the movement of the coupling hook **610**_SN when a user presses the manipulation button. The user may detach the coupling hook **610**_SN from the inner groove **141**_SN using the manipulation button to separate the optical fiber module **600** and the connector **140** from each other.

[0108] However, embodiments are not limited thereto. and a method by which the optical fiber module **600** and the connector **140** are separably bonded to each other, is not limited to the above description, because the optical fiber module **600** may be separably bonded to the connector **140** in various known ways.

[0109] A connector waveguide **142** may pass through the inside of the body **141**. The connector waveguide **142** may extend from the first side surface **141**_S1 to the second side surface **141**_S2 of the body **141**. A first end disposed at the first side surface **141**_S1 of the body **141** of both ends of the connector waveguide **142** may face an optical fiber **620** of the optical fiber module **600**, and a second end disposed at the second side surface **141**_S2 of the body **141** of both ends of the connector waveguide **142** may face the waveguide **133**.

[0110] In one or more embodiments, vertical levels of both ends of the connector waveguide **142** may be different from each other. For example, the vertical level of a first end of the connector waveguide **142** may be higher than the vertical level of a second end of the connector waveguide **142** in the vertical direction (Z direction).

[0111] The connector waveguide **142** may be a path on which the optical signals OS move. In one or more embodiments, the refractive index of the connector waveguide **142** may be greater than the refractive index of the body **141**. For example, the optical signals OS inside the connector waveguide **142** may be totally reflected between the connector waveguide **142** and the body **141** and may move along the connector waveguide **142**. In one or more embodiments, the configuration material of the body **141** may be, for example, glass, and the connector waveguide **142** may be formed by condensing laser onto a part of glass or by performing chemical bonding on a part of glass.

[0112] Hereinafter, the condensing portion **143** will be described with reference to FIG. **5**.

[0113] The condensing portion **143** may be disposed at one side of the body **141**. The condensing portion **143** may be disposed at the second side surface **141**_S2 of the body **141**. The condensing portion **143** may be disposed at the side surface **141**_G_S2 of the second groove **141**_G of the second side surface **141**_S2 of the body **141**. For example, the condensing portion **143** may be adjacent to one end disposed at the second side surface **141**_S2 of the body **141** of both ends of the connector waveguide **142** and may be disposed between the connector waveguide **142** and the waveguide **133**.

[0114] The condensing portion **143** may be configured in such a way that the optical signals OS output from the connector waveguide **142** toward the PIC chip **130** may be condensed onto the waveguide **133** of the PIC chip **130**. In addition, the condensing portion **143** may be configured in such a way that the optical signals OS output from the waveguide **133** of the PIC chip **130** may be condensed onto the connector waveguide **142**. For example, the optical signals OS incident on the condensing portion **143** from one of the connector waveguide **142** and the waveguide **133** may pass through the condensing portion **143** and refracted and thus may be condensed onto the other of the connector waveguide **142** and the waveguide **133**. In one or more embodiments, the refractive index of the condensing portion **143** may be different from the refractive index of the connector waveguide **142**.

[0115] In one or more embodiments, the condensing portion **143** may include at least one lens. A focal point **143**_F of the condensing portion **143** may be disposed in the waveguide **133** or the connector waveguide **142**. For example, a focal length of the condensing portion **143** may be greater than or equal to a distance at which the side surface of the second groove **141**_G of the body **141** and the side surface **130**_G_S of the first groove **130**_G of the PIC chip **130** are spaced apart from each other. The focal length of the condensing portion **143** may be greater than or equal to a distance at which a second end of the connector waveguide **142** and one end of the waveguide **133** of the PIC chip **130** are spaced apart from each other.

[0116] In one or more embodiments, the condensing portion **143** may be a convex lens. The condensing portion **143** may have a shape in which both sides of the condensing portion **143** are outwards convex. However, embodiments are not limited thereto, and the condensing portion **143** may have a shape in which a plurality of lenses are compressed, and may have a plurality of focal points.

[0117] In one or more embodiments, the thickness of the condensing portion **143**, for example, a length of the condensing portion **143** in the vertical direction (Z direction), may be greater than a thickness of the waveguide **133**. The thickness of the condensing portion **143** may be less than a depth of the second groove **141**_G.

[0118] In one or more embodiments, the refractive index of the condensing portion **143** may be different from the refractive index of the connector waveguide **142**. For example, the refractive index of the condensing portion **143** may be greater than the refractive index of the connector waveguide **142**. For example, the condensing portion **143** may include elastomer or epoxy. In one or more embodiments, the condensing portion **143** may be formed by performing a nano imprinting process or an inkjet process on the body **141** in which the connector waveguide **142** is formed.

[0119] While the connector **140** is mounted on the PIC chip **130**, the connector waveguide **142** of the connector **140** and the waveguide **133** of the PIC chip **130** may need to be aligned to face each other. While the connector waveguide **142** and the waveguide **133** are aligned, the optical signals OS may be condensed onto one point by using the condensing portion **143** of the connector **140** so that an alignment tolerance between the waveguide **133** and the connector waveguide **142** may be increased. As the tolerance is increased, the speed at which the connector **140** is mounted on the PIC chip **130** is enhanced so that the manufacturing speed of the chip structure **100** may be enhanced.

[0120] Referring back to FIG. **3**, the dummy chip **160** may be disposed on the PIC chip **130**. The dummy chip **160** may be spaced apart from the first groove **130**_G of the PIC chip **130**. In one or more embodiments, the dummy chip **160** may be spaced apart from the connector **140** in the horizontal direction.

[0121] In one or more embodiments, the dummy chip **160** may further include a dielectric layer **160**_DL disposed at a lower surface of the dummy chip **160**. The dielectric layer **160**_DL of the dummy chip **160** may be bonded to the upper distribution structure **132** of the PIC chip **130**. For example, the dielectric layer **160**_DL of the dummy chip **160** and the upper distribution dielectric layer **160**_DL of the PIC chip **130** may be integrally bonded to each other through diffusion bonding by heat. The dummy chip **160** and the PIC chip **130** may be bonded to each other through oxide-oxide bonding. However, a bonding method of the dummy chip **160** and the PIC chip **130** is not limited thereto, and the dummy chip **160** and the PIC chip **130** may be bonded to each other through an adhesive film or the like.

[0122] FIG. **6** is an enlarged view schematically illustrating a part of the chip structure **100** according to one or more embodiments.

[0123] Most components of a semiconductor package **1000***a* to be described below and materials for forming the components are substantially the same or similar to the previous description given with reference to FIG. **5**. Thus, for convenience of description, differences between the chip structure **100***a* of FIG. **6** and the chip structure **100** of FIG. **5** described above will be described.

[0124] Referring to FIGS. **6** and **3**, the chip structure **100***a* may include a redistribution structure **110**, an EIC chip **120**, a first molding layer **150**, a PIC chip **130**, a connector **140***a*, and a dummy chip **160**.

[0125] The connector **140***a* may include a body **141**, a connector waveguide **142**, and a condensing portion **143***a*. The connector **140***a* may be attached on the PIC chip **130**. For example, the connector **140***a* may be mounted on the PIC chip **130** by using the transparent adhesive member **170**.

[0126] The PIC chip **130** may include a first groove **130**_G recessed inwards from an upper surface and a side surface of the PIC chip **130**, and the body **141** of the connector **140***a* may include a second groove **141**_G recessed inwards from a second side surface **141**_S2 and a lower surface of the body **141**. For example, the connector **140***a* may be disposed on the PIC chip **130** so that a side surface **130**_G_S of the first groove **130**_G and a side surface **141**_G_S2 of the second groove **141**_G may face each other.

[0127] One end of the waveguide **133** of the PIC chip **130** may be exposed externally to the semiconductor package **1000** through the first groove **130**_G, and one end of the connector waveguide **142** of the connector **140***a* may be exposed externally to the semiconductor package **1000** through the second groove **141**_G. The waveguide **133** and the connector waveguide **142** may face each other. While the connector **140***a* is mounted on the PIC chip **130** through the second groove **141**_G having a corresponding shape to the shape of the first groove **130**_G, alignment between the waveguide **133** and the connector waveguide **142** may be facilitated.

[0128] The condensing portion **143***a* may be disposed at the second groove **141**_G of the body **141**. For example, the condensing portion **143***a* may be disposed at the side surface **141**_G_S2 of the second groove **141**_G of the body **141**. The condensing portion **143***a* may be configured in such a way that optical signals emitted from one to the other one of the waveguide **133** or the connector waveguide **142** may be condensed onto the other one. For example, a focal point of the condensing portion **143***a* may be disposed on the waveguide **133** or the connector waveguide **142**. For example, a focal length of the condensing portion **143***a* may be greater than or equal to a separation distance between the edge coupler **133**_EC of the waveguide **133** and one end of the connector waveguide **142**.

[0129] The condensing portion **143***a* may have a hemispherical shape. For example, the cross-section of the condensing portion **143***a* may have a semi-circular shape or a semi-elliptical shape. A side surface which the body **141** contacts, of side surfaces of the condensing portion **143***a* may have a flat shape, and a side surface spaced apart from the body **141**, of the side surfaces of the condensing portion **143***a* may have a convex shape.

[0130] In one or more embodiments, while the condensing portion **143***a* of the connector **140***a* is formed, the condensing portion **143***a* separately produced may be attached into the second groove **140**_G of the body **141**. A separately produced side surface of the condensing portion **143***a* may be formed as a plane, and the condensing portion **143***a* may be attached to the body **141** so that the side surface that is a plane may be in contact with the body **141**.

[0131] FIG. **7** is a cross-sectional view schematically illustrating a chip structure **100***b* according to one or more

embodiments. FIG. **8** is a cross-sectional view schematically illustrating a chip structure **100***c* according to one or more embodiments.

[0132] Most components of the chip structures **100***b* and **100***c* to be described below and materials for forming the components are substantially the same or similar to the previous description given with reference to FIG. **3**. Thus, for convenience of description, differences between the chip structures **100***b* and **100***c* of FIGS. **7** and **8** and the chip structure **100** of FIG. **3** described above will be described.

[0133] Referring to FIG. **7**, the chip structure **100***b* may include a redistribution structure **110**, an EIC chip **120**, a first molding layer **150**, a PIC chip **130**, a connector **140***b*, and a dummy chip **160**. The connector **140***b* may include a body **141***b*, a connector waveguide **142**, and a condensing portion **143**.

[0134] The connector **140***b* may be disposed on the PIC chip **130**. For example, the connector **140***b* may be disposed in a first groove **130**_G of the PIC chip **130**. For example, a lower surface of the body **141***b* of the connector **140***b* may be mounted on a bottom surface of the first groove **130**_G of the PIC chip **130**.

[0135] The body **141***b* of the connector **140***b* may include a first side surface **141***b*_S1 and a second side surface **141***b*_S2 facing the first side surface **141***b*_S1. In one or more embodiments, the first side surface **141***b*_S1 of the body **141***b* may be disposed outside the photonic integrated circuit chip **130**, and the second side surface **141***b*_S2 of the body **141***b* may be disposed on the PIC chip **130**. For example, the second side surface **141***b*_S2 may be a plane. The second side surface **141***b*_S2 of the body **141***b* may be disposed on the first groove **130**_G. The body **141***b* may not include a groove that extends inwards from the second side surface **141***b*_S2 of the body **141***b* of the connector **140***b*.

[0136] In one or more embodiments, while the connector **140***b* is formed, a process of manufacturing the body **141***b* may be more simplified so that the production speed of the connector **140***b* may be enhanced and the production yield of the connector **140***b* may be enhanced. In one or more embodiments, while the condensing portion **143** of the connector **140***b* is formed on the body **141***b*, the second side surface **141***b*_S2 of the body **141***b* may be a plane so that manufacturing of the condensing portion **143** may be facilitated. Also, an area in which an upper surface of the PIC chip **130** is exposed externally to the semiconductor package **1000**, may be relatively increased so that dissipation of heat generated in the PIC chip **130** may be facilitated.

[0137] Referring to FIG. **8**, the chip structure **100***c* may include a redistribution structure **110**, an EIC chip **120**, a first molding layer **150**, a PIC chip **130**, a connector **140***c*, and a dummy chip **160**. The connector **140***c* may include a body **141**, a connector waveguide **142**, a condensing portion **143**, and an external condensing portion **144**.

[0138] The connector **140***c* may be disposed on the PIC chip **130**. The connector **140***c* may be spaced apart from the dummy chip **160** in a horizontal direction. A part of the connector **140***c* may be disposed in the first groove **130**_G of the PIC chip **130**.

[0139] The connector **140***c* may be separably bonded to an optical fiber module (see **600** of FIG. **4**). For example, the body **141** of the connector **140***c* may include a first side surface **141**_S1 and a second side surface **141**_S2 facing the first side surface **141**_S1. The optical fiber module (see **600** of FIG. **4**) may be bonded to the first side surface **141**_S1 of the body **141**, and the second side surface **141**_S2 of the body **141** may be disposed on the PIC chip **130**.

[0140] The body **141** may include a second groove **141**_G that is recessed inwards from the second side surface **141**_S2 and a lower surface of the body **141**. The side surface **141**_G_S2 of the second groove **141**_G of the body **141** may face the side surface of the first groove **130**_G of the PIC chip **130**. For example, the connector **140***c* may be attached to the PIC chip **130** so that the first groove **130**_G and the second groove **141**_G may be engaged with the connector **140***c*.

[0141] The connector waveguide **142** may extend from the first side surface **141**_S1 to the second side surface **141**_S2 of the body **141**. An end exposed from the first side surface **141**_S externally to the semiconductor package **1000**, of both ends of the connector waveguide **142** may be referred to as a first end, and an end exposed from the second side surface **141**_S2 externally to the semiconductor package **1000** may be referred to as a second end. For example, the first end of the connector waveguide **142** may face an optical fiber (see **620** of FIG. **4**) of the optical fiber module (see **600** of FIG. **4**), and the second end of the connector waveguide **142** may face the waveguide **133** of the PIC chip **130**.

[0142] The condensing portion **143** may be in contact with one end of the connector waveguide **142**, and the external condensing portion **144** may be in contact with the other end facing one end of the connector waveguide **142**. For example, the condensing portion **143** may be in contact with the second end of the connector waveguide **142**, and the external condensing portion **144** may be in contact with the first end of the connector waveguide **142**. For example, the condensing portion **143** may be disposed on the second side surface **141**_S2 of the body **141**, and the external condensing portion **144** may be disposed on the first side surface **141**_S1 of the body **141**. The condensing portion **143** may be disposed at the side surface **141**_G_S2 of the second groove **141**_G of the body **141**.

[0143] The external condensing portion **144** may be configured in such a way that optical signals emitted from the connector waveguide **142** to the optical fiber (see **620** of FIG. **4**) may be condensed onto the optical fiber (see **620** of FIG. **4**). The external condensing portion **144** may be configured in such a way that optical signals emitted by the optical fiber (see **620** of FIG. **4**) toward the connector waveguide **142** may be condensed onto the connector waveguide **142**.

[0144] For example, the optical signals OS incident on the external condensing portion **144** from one of the connector waveguide **142** and the optical fiber may pass through the external condensing portion **144** and refracted and thus may be condensed onto the other of the connector waveguide **142** and the optical fiber.

[0145] In one or more embodiments, a focal length of the external condensing portion **144** may be greater than or equal to a separation distance between the optical fiber (see **620** of FIG. **4**) and the body **141**. In one or more embodiments, the refractive index of the external condensing portion **144** may be different from the refractive index of the connector waveguide **142**. In one or more embodiments, the thickness of the external condensing portion **143**, for example, a length of the external condensing portion **144** in the vertical direction (Z direction), may be greater than a thickness of the connector waveguide **142**. In FIG. **8**, the outer condensing portion **144** appears in a shape in which

both sides of the outer condensing portion **144** are convex outwards, but the shape of the outer condensing portion **144** is not limited thereto.

[0146] FIG. **9** is a plan view schematically illustrating a semiconductor package **2000** according to one or more embodiments.

[0147] Most components of the semiconductor package **2000** to be described below and materials for forming the components are substantially the same or similar to the previous description given with reference to FIG. **2**. Thus, for convenience of description, differences between the semiconductor package **2000** of FIG. **9** and the semiconductor package **1000** of FIG. **2** described above will be described.

[0148] The semiconductor package **2000** may include a main substrate **700**, a package substrate **200**, a semiconductor chip **300**, a plurality of stack structures **400**, a chip structure **100**, a second molding layer **500**, and a heat sink **800**.

[0149] The main substrate **700** may include a core insulating layer including at least one material selected from phenol resin, epoxy resin, and polyimide. For example, the core insulating layer may include at least one material selected from the group consisting of polyimide, flame retardant 4 (FR-4), tetrafunctional epoxy, polyphenylene ether, epoxy/polyphenylene oxide, bismaleimide triazine (BT), Thermount, cyanate ester, and liquid crystal polymer.

[0150] In one or more embodiments, the main substrate **700** may include an upper pad **770** disposed on the upper surface of the core insulating layer and a lower pad **780** disposed on the lower surface of the core insulating layer. The upper pad **770** and the lower pad **780** may be part of circuit distribution patterned after a Cu foil is coated on the upper surface and the lower surface of the core insulating layer. For example, the upper pad **770** and the lower pad **780** may be regions that are not covered by a solder resist layer of the circuit distribution and are exposed externally to the semiconductor package **2000**.

[0151] In one or more embodiments, each of the upper pad **770** and the lower pad **780** may include Cu, Ni, stainless steel or beryllium copper. Internal distribution for electrically connecting the upper pad **770** to the lower pad **780** may be formed in the main substrate **700**.

[0152] In one or more embodiments, external connection terminals CT**7** may be attached to the lower pad **780**. The external connection terminals CT**7** may be configured to electrically and physically connect the main substrate **700** and an external device on which the main substrate **700** is mounted, to each other. The external connection terminals CT**7** may be formed from, for example, solder ball or solder bumps.

[0153] The package substrate **200** may be attached to the main substrate **700**. In one or more embodiments, the main substrate **700** and the package substrate **200** may be electrically connected to each other by the connection terminals CT**2** disposed between the upper pad **770** of the main substrate **700** and the lower pad **280** of the package substrate **200**.

[0154] The main substrate **700** may be a PCB, and the package substrate **200** may be an interposer. For example, the package substrate **200** may be used to electrically connect the semiconductor chip **300**, the plurality of stack structures **400**, and the chip structure **100** to the main substrate **700**. For example, a pitch of the upper pad **270** of the package substrate **200** may be less than a pitch of the lower pad **280** of the package substrate **200**.

[0155] The plurality of stack structures **400**, the semiconductor chip **300**, and the chip structure **100** may be attached to the package substrate **200**. The second molding layer **500** may be disposed on the package substrate **200** and may surround the plurality of stack structures **400**, the semiconductor chip **300**, and the chip structure **100**.

[0156] A vertical level of an upper surface of the second molding layer **500** may be equal to a vertical level of an upper surface of the plurality of stack structures **400**, the vertical level of the upper surface of the semiconductor chip **300**, and the vertical level of the upper surface of the dummy chip **160** of the chip structure **100** in the vertical direction (Z direction). The upper surface of the second molding layer **500**, the upper surface of the plurality of stack structures **400**, the upper surface of the semiconductor chip **300**, and the upper surface of the dummy chip **160** of the chip structure **100** may be coplanar with each other.

[0157] The heat sink **800** may be disposed on the second molding layer **500**. For example, the heat sink **800** may be disposed on the second molding layer **500**, the plurality of stack structures **400**, the semiconductor chip **300**, and the dummy chip **160** of the chip structure **100**. For example, the heat sink **800** may cover an upper surface of the second molding layer **500**, upper surfaces of the plurality of stack structures **400**, an upper surface of the semiconductor chip **300**, and an upper surface of the dummy chip **160** of the chip structure **100**. However, the heat sink **800** may be spaced apart from the connector **140** of the chip structure **100** in the horizontal direction.

[0158] The heat sink **800** may include a thermally conductive material having high thermal conductivity. The heat sink **800** may help dissipate heat generated from the plurality of laminated structures **400**, the semiconductor chip **300**, and the chip structure **100** externally to the semiconductor package **2000**. For example, the heat sink **800** may include a metal such as Cu or Al, graphene, graphite, and/or a carbon-containing material such as carbon nanotubes. However, the material of the heat sink **800** is not limited to the above-described materials. In one or more embodiments, the heat sink **800** may include a single metal layer or a plurality of stacked metal layers.

[0159] In one or more embodiments, the semiconductor package **2000** may further include a case **820** and a supporter **830**. The case **820** may be attached to the heat sink **800**. The case **820** may cover an upper surface of the heat sink **800** completely to protect the heat sink **800**, the second molding layer **500**, and the package substrate **200** from the outside. In one or more embodiments, one side surface of the case **820** may be coplanar with one side surface of the heat sink **800**, and the case **820** may not overlap the connector **140** of the chip structure **100** in the vertical direction (Z direction).

[0160] In one or more embodiments, a first region of the case **820** may be disposed on the heat sink **800**, and a second region of the case **820** may be disposed on the main substrate **700**. A bent portion of the case **820** may be disposed between the first region of the case **820** and the second region of the case **820** to connect the first region of the case **820** and the second region of the case **820** to each other. For example, the bent portion of the case **820** may be inclined from the upper surface of the main substrate **700** in the vertical direction (Z direction). For example, the inclination of the bent portion of the case **820** may be proportional to a difference between the

vertical level of the first region of the case **820** and the vertical level of the second region of the case **820**.

[0161] In one or more embodiments, the supporter **830** may be disposed on the main substrate **700**. For example, the supporter **830** may be disposed between the case **820** and the main substrate **700**. For example, the supporter **830** may be disposed under the second region of the case **820**. The supporter **830** may reduce a difference between the vertical levels of the first region and the second region of the case **820**. The inclination of the bent portion of the case **820** may be reduced through the supporter **830** so that formation feasibility and durability of the case **820** may be enhanced.

[0162] While embodiments have been described with reference to the figures, it will be understood by those of ordinary skill in the art that various changes in form and details may be made therein without departing from the spirit and scope as defined by the following claims and their equivalents.

What is claimed is:

1. A chip structure comprising:

a redistribution structure;

an electronic integrated circuit (EIC) chip on the redistribution structure;

a photonic integrated circuit (PIC) chip on the EIC chip, the PIC chip comprising:

a first groove recessed inwards from an upper surface of the PIC chip and a side surface of the PIC chip; and

a waveguide having a first end exposed externally to the chip structure through the first groove; and

a connector on the PIC chip, the connector comprising:

a connector waveguide passing through an inside of a body, a refractive index of the connector being greater than a refractive index of the body; and

a condensing portion on a side of the body,

wherein the condensing portion is configured to condense optical signals incident on the condensing portion from the connector waveguide to the waveguide of the PIC chip.

2. The chip structure of claim **1**, wherein the connector waveguide included in the connector extends from a first side surface of the body included in the connector to a second side surface of the body included in the connector, facing the first side surface, and

wherein at least a part of the second side surface of the body included in the connector faces a side surface forming the first groove included in the PIC chip.

3. The chip structure of claim **2**, wherein the body included in the connector is configured to separably mount an optical fiber module, and

wherein the optical fiber module is separably bonded to the first side surface of the body included in the connector.

4. The chip structure of claim **2**, wherein the condensing portion included in the connector is on the second side surface of the body included in the connector.

5. The chip structure of claim **4**, wherein the condensing portion included in the connector is in contact with a first end of the connector waveguide included in the connector and is between the waveguide included in the PIC chip and the connector waveguide included in the connector.

6. The chip structure of claim **4**, wherein the connector further comprises an external condensing portion, and

wherein the external condensing portion is on the first side surface of the body included in the PIC chip and is in contact with a second end of the connector waveguide opposite to the first end of the connector waveguide.

7. The chip structure of claim **2**, wherein the body included in the connector further comprises a second groove recessed inwards from a lower surface of the body and the second side surface of the body, and

wherein the second groove of the body included in the connector is above the PIC chip, and the first groove included in the PIC chip is below the connector in a vertical direction.

8. The chip structure of claim **7**, wherein a portion forming a side surface of the second groove of the second side surface of the body faces a side surface of the first groove included in the PIC chip, and the condensing portion included in the connector is on a side surface of the second groove of the connector.

9. The chip structure of claim **1**, wherein a thickness of the condensing portion included in the connector in a vertical direction is greater than a thickness of the waveguide included in the PIC chip in the vertical direction.

10. The chip structure of claim **1**, wherein the condensing portion comprises at least one lens, and

wherein a focal point of the condensing portion is on the waveguide included in the PIC chip or the connector waveguide included in the connector.

11. The chip structure of claim **1**, further comprising:

a first molding layer on the redistribution structure and on the EIC chip; and

a mold through via passing through the first molding layer and connecting the redistribution structure and the PIC chip to each other,

wherein the PIC chip is on the first molding layer and the EIC chip, and

a side surface of the redistribution structure, a side surface of the first molding layer, and a side surface of the PIC chip are coplanar with each other.

12. The chip structure of claim **1**, further comprising a dummy chip on the PIC chip, wherein the dummy chip is spaced apart from the first groove included in the PIC chip.

13. A semiconductor package comprising:

a package substrate;

a semiconductor chip on the package substrate;

a chip structure on the package substrate and spaced apart from the semiconductor chip; and

a second molding layer on the package substrate and on the semiconductor chip and the chip structure,

wherein the chip structure comprises:

a redistribution structure on the package substrate;

an electronic integrated circuit (EIC) chip on the redistribution structure;

a photonic integrated circuit (PIC) chip on the EIC chip, the PIC chip comprising:

a first groove recessed inwards from an upper surface of the PIC chip and a side surface of the PIC chip; and

a waveguide of which a first end is exposed externally to the semiconductor package through the first groove; and

a connector on the PIC chip, the connector comprising:

a connector waveguide passing through an inside of a body; and

a condensing portion contacting a first end of the connector waveguide,

wherein the condensing portion is configured to condense optical signals incident on the condensing portion from the connector waveguide onto the waveguide of the PIC chip.

14. The semiconductor package of claim **13**, wherein an area of the EIC chip of the chip structure is less than an area of the redistribution structure of the chip structure,

wherein the chip structure further comprises a first molding layer on the redistribution structure and on the EIC chip, and

wherein a side surface of the redistribution structure, a side surface of the first molding layer, and a side surface of the PIC chip are coplanar with each other.

15. The semiconductor package of claim **14**, wherein a boundary surface is between the first molding layer and the second molding layer.

16. The semiconductor package of claim **14**, wherein the chip structure further comprises a mold through via passing through the first molding layer and connecting the redistribution structure and the PIC chip to each other.

17. The semiconductor package of claim **13**, wherein the chip structure further comprises a dummy chip disposed on the PIC chip and spaced apart from the connector in a horizontal direction, and

wherein an upper surface of the dummy chip, an upper surface of the semiconductor chip, and an upper surface of the second molding layer of the chip structure are coplanar with each other.

18. The semiconductor package of claim **17**, further comprising a heat sink on the dummy chip, the semiconductor chip, and the second molding layer of the chip structure.

19. A semiconductor package comprising:

a package substrate;

a semiconductor chip on the package substrate;

a plurality of stack structures on the package substrate and spaced apart from the semiconductor chip;

a chip structure on the package substrate and spaced apart from the semiconductor chip;

a second molding layer on the package substrate, the semiconductor chip, and the chip structure; and

a heat sink on the second molding layer, the semiconductor chip, and the plurality of stack structures, and

wherein the chip structure comprises:

a redistribution structure on the package substrate;

an electronic integrated circuit (EIC) chip on the redistribution structure;

a first molding layer on the redistribution structure and the EIC chip;

a photonic integrated circuit (PIC) chip on the EIC chip and the first molding layer, the PIC chip comprising:

a first groove recessed inwards from an upper surface of the PIC chip and a side surface of the PIC chip; and

a waveguide having a first end is exposed externally to the semiconductor package through the first groove;

a connector comprising:

a body on the PIC chip and configured to be separably bonded to an optical fiber module;

a connector waveguide passing through the inside of the body, a refractive index of the connector waveguide being greater than a refractive index of the body; and

a condensing portion at one side of the body and configured to condense optical signals emitted from the connector waveguide onto the waveguide of the PIC chip; and

a dummy chip on the PIC chip, spaced apart from the connector, and below the heat sink in a vertical direction.

20. The semiconductor package of claim **19**, wherein the condensing portion of the connector is in contact with a first end of the connector waveguide included in the connector and is between the waveguide of the PIC chip and the connector waveguide of the connector, and

wherein a focal length of the condensing portion of the connector is greater than or equal to a separation distance between the one end of the connector waveguide and the waveguide.

* * * * *