US 20250287126A1

(19) United States
(12) Patent Application Publication
YANG et al.
(10) Pub. No.: US 2025/0287126 A1
(43) Pub. Date: Sep. 11, 2025

(54) **COMMUNICATION APPARATUS AND BRACKET THEREOF**

(71) Applicant: **Wistron NeWeb Corp.**, Hsinchu (TW)

(72) Inventors: **Lan-Chun YANG**, Hsinchu (TW); **Po-Chang CHU**, Hsinchu (TW); **Chun-Wei WANG**, Hsinchu (TW)

(21) Appl. No.: **19/009,117**

(22) Filed: **Jan. 3, 2025**

(30) **Foreign Application Priority Data**

Mar. 7, 2024 (TW) 113108331

Publication Classification

(51) **Int. Cl.**
H04Q 1/02 (2006.01)

(52) **U.S. Cl.**
CPC ***H04Q 1/09*** (2013.01)

(57) **ABSTRACT**

A communication apparatus is provided. The communication apparatus includes a bracket and an electronic device. The bracket includes a mounting member, a carrying member and a supporting member. A first end of the supporting member is connected to the carrying member. A second end of the supporting member is connected to the mounting member. The electronic device is disposed on the mounting member.

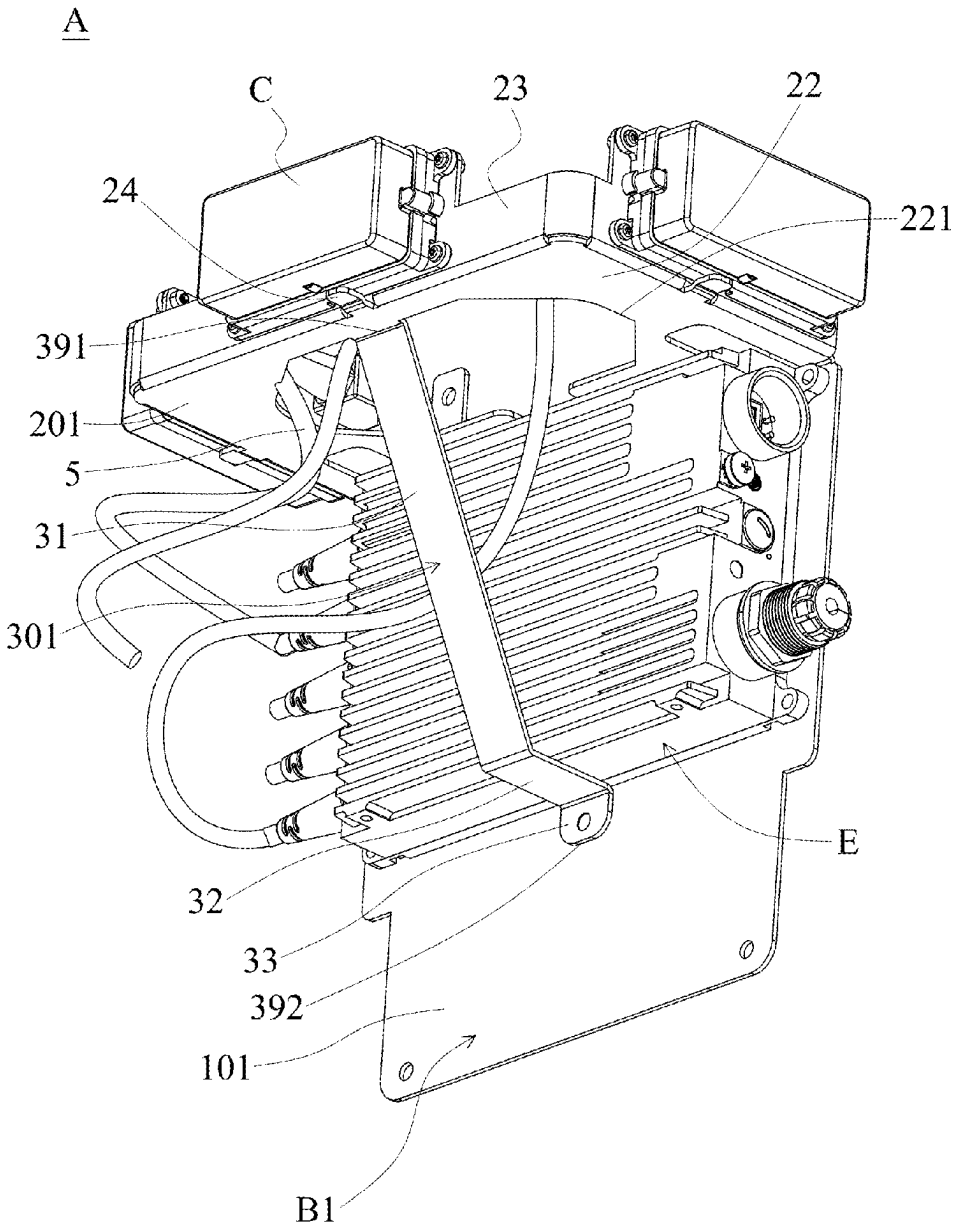

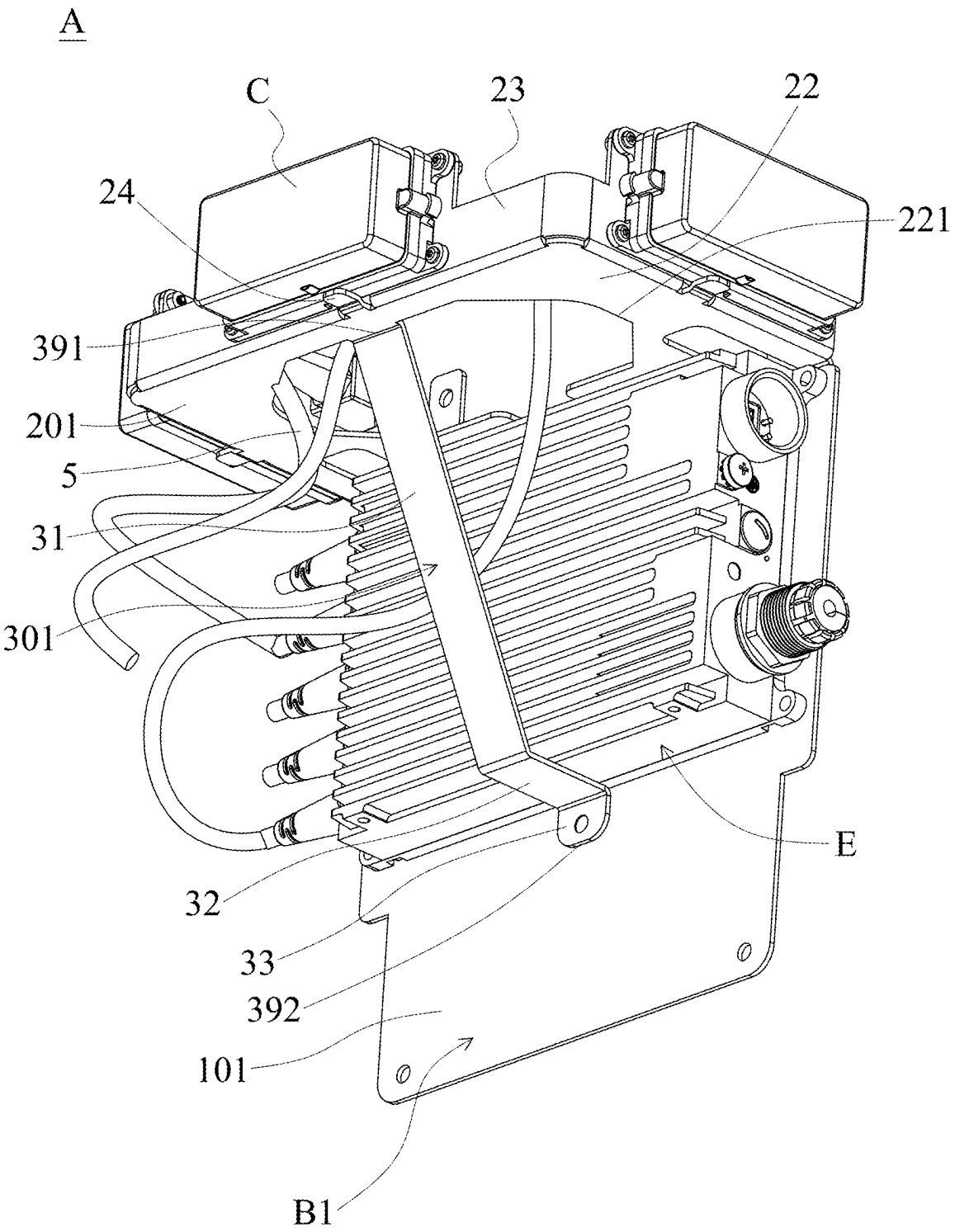

FIG. 1A

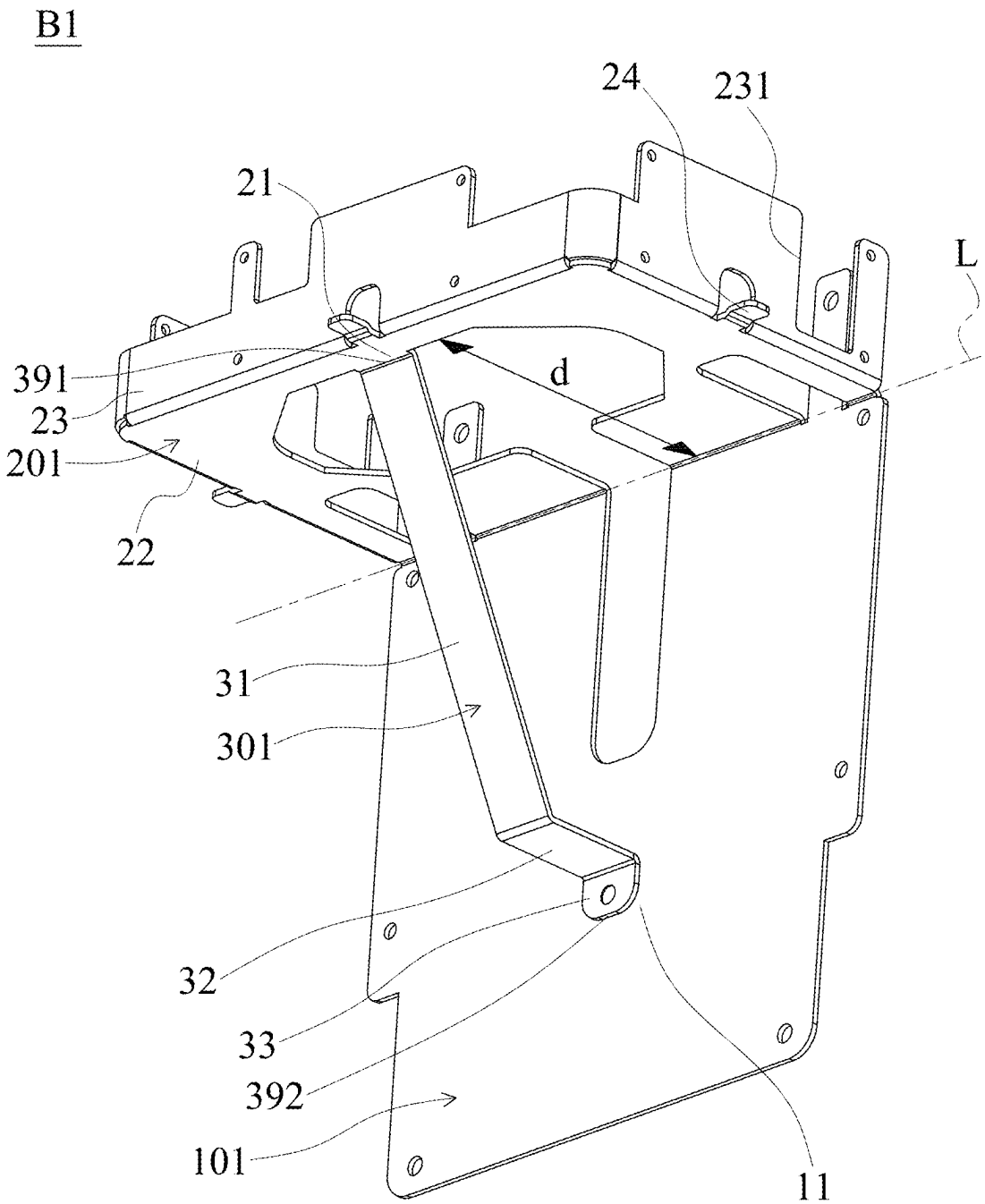

FIG. 1B

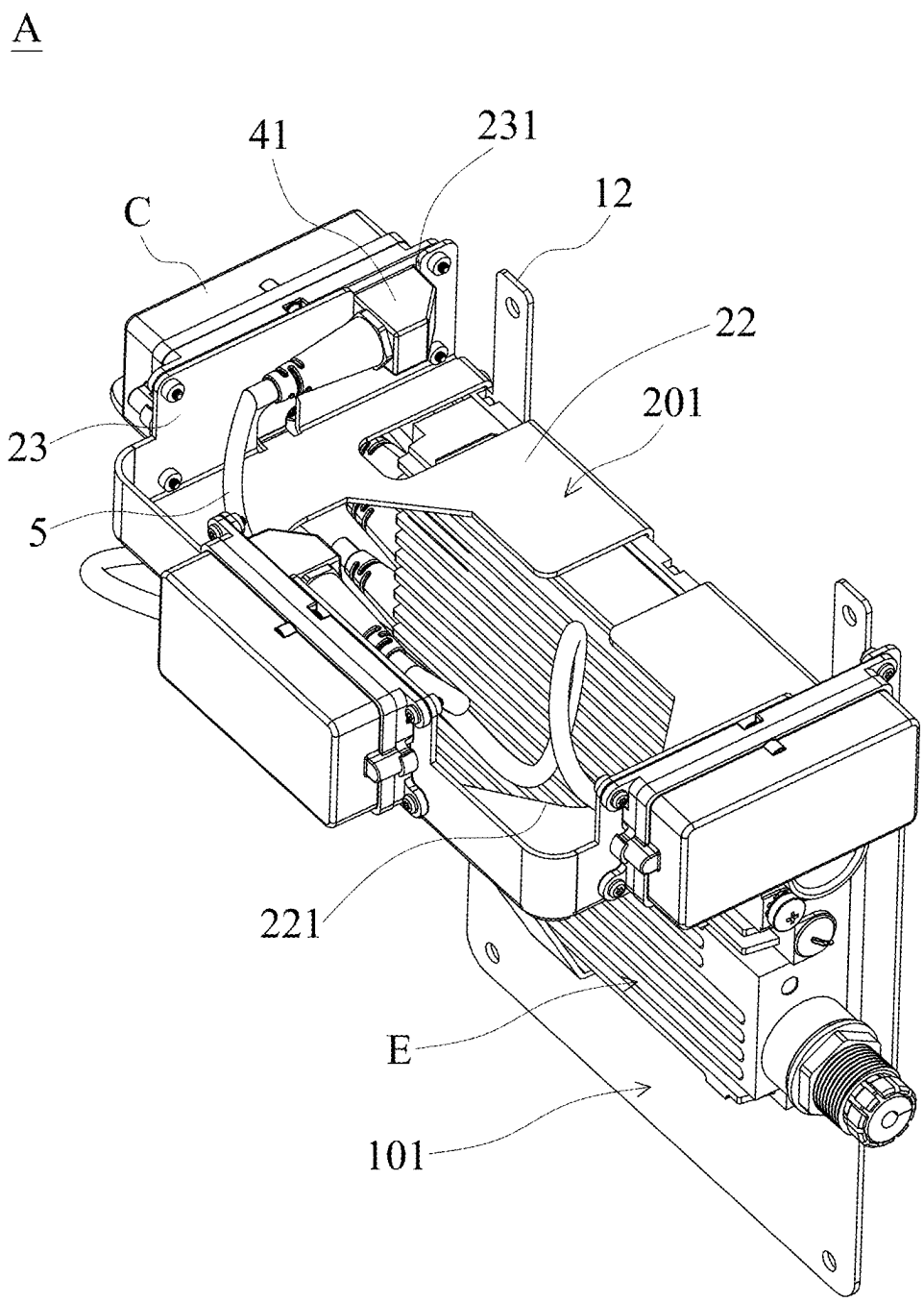

FIG. 1C

B2

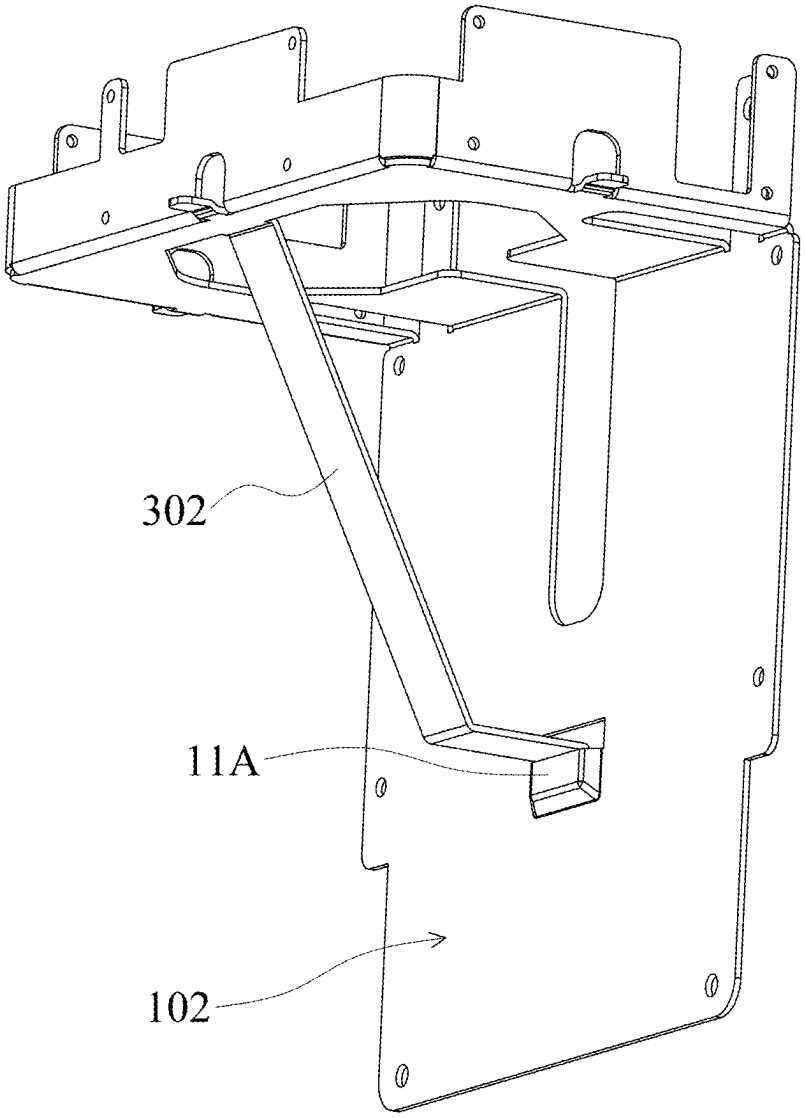

FIG. 2A

B2

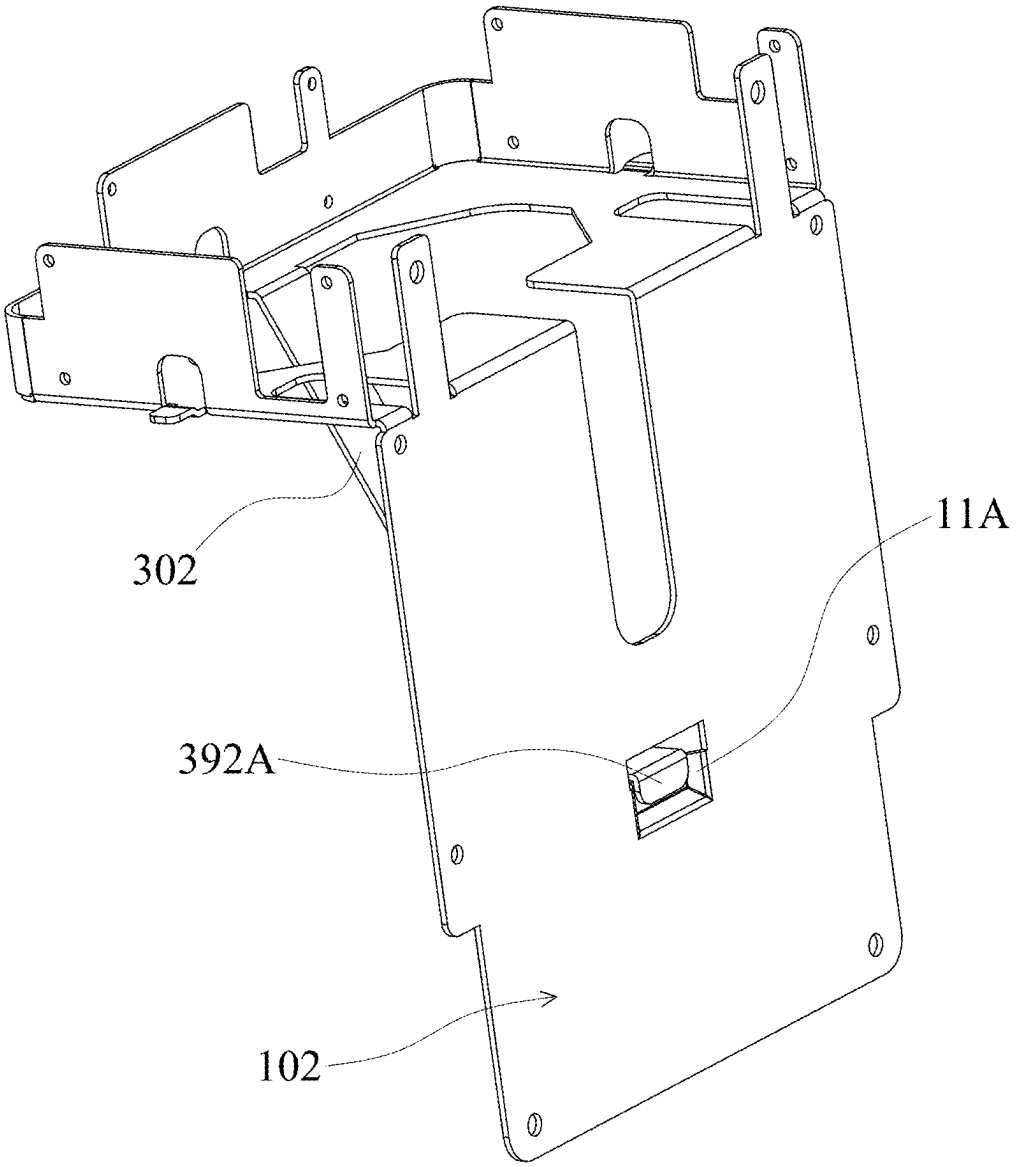

FIG. 2B

B3

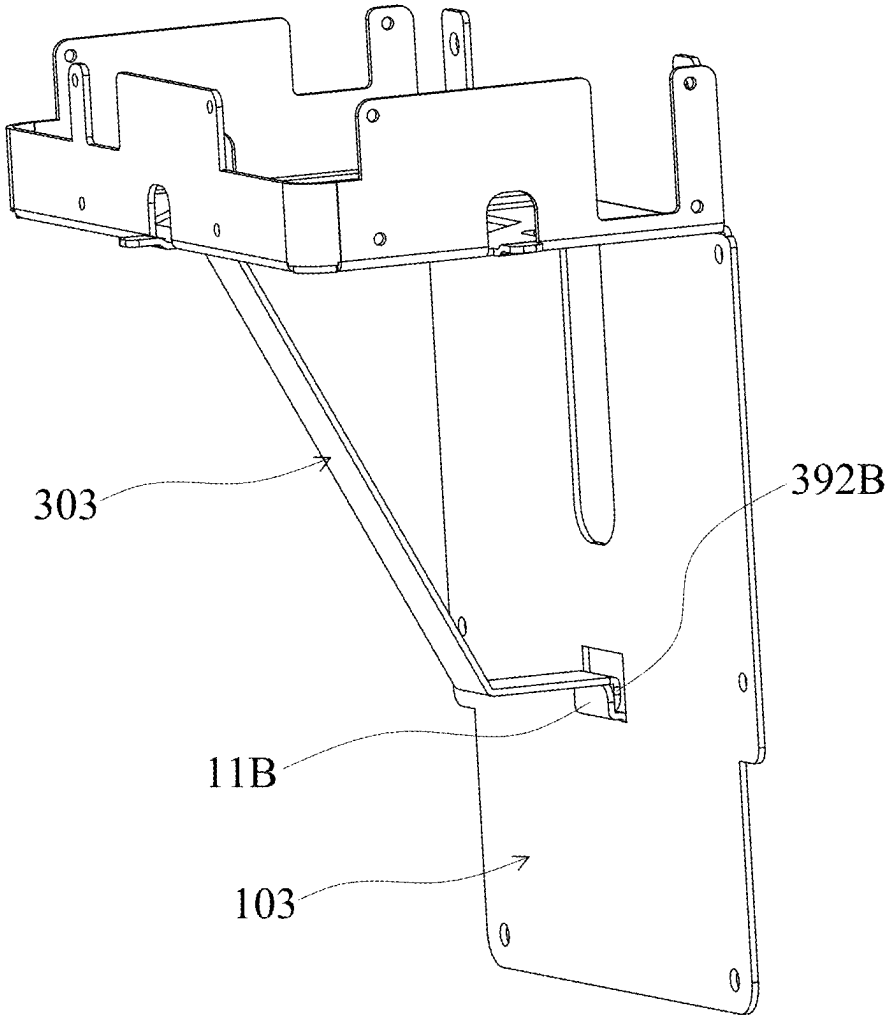

FIG. 3

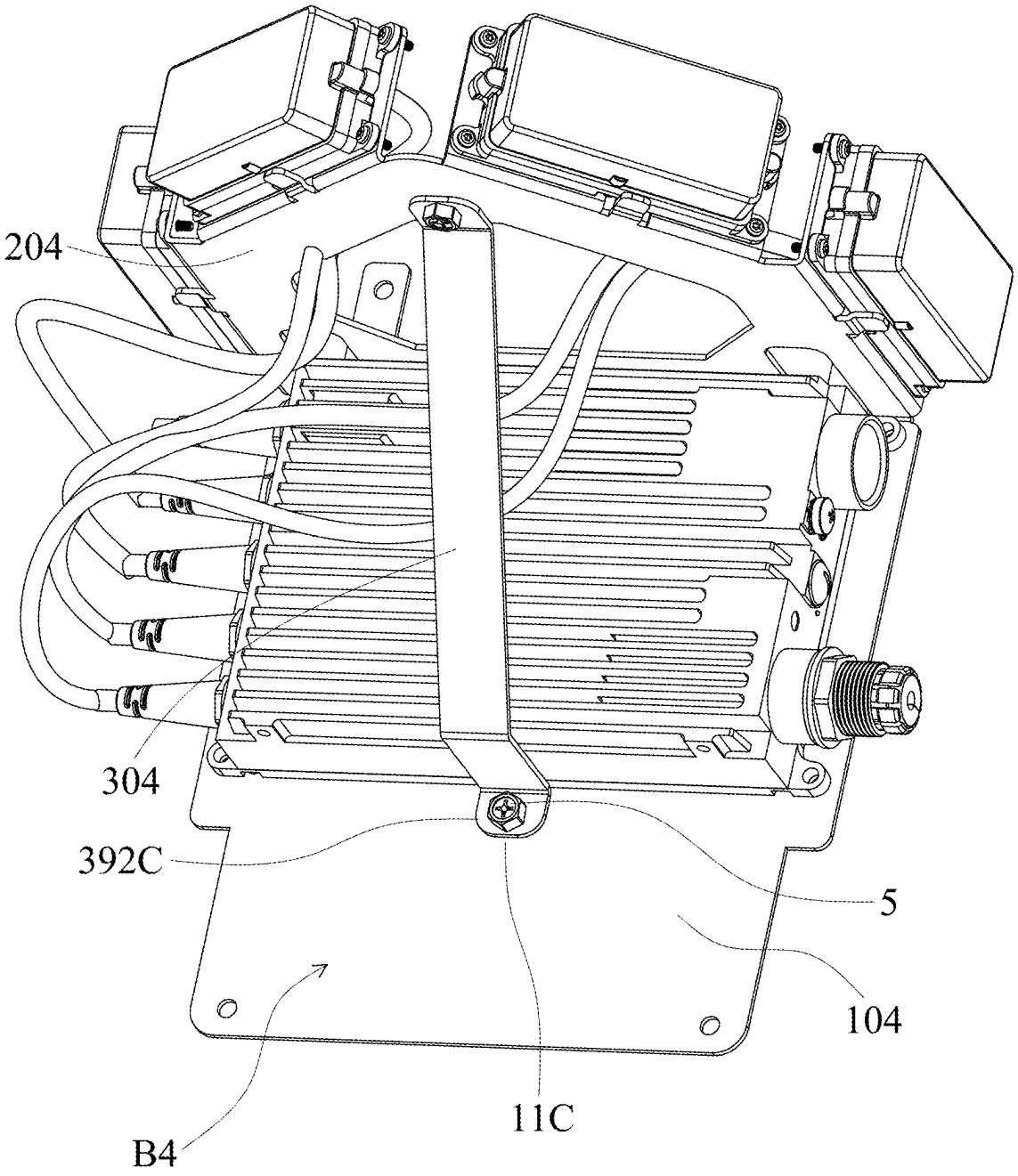

FIG. 4

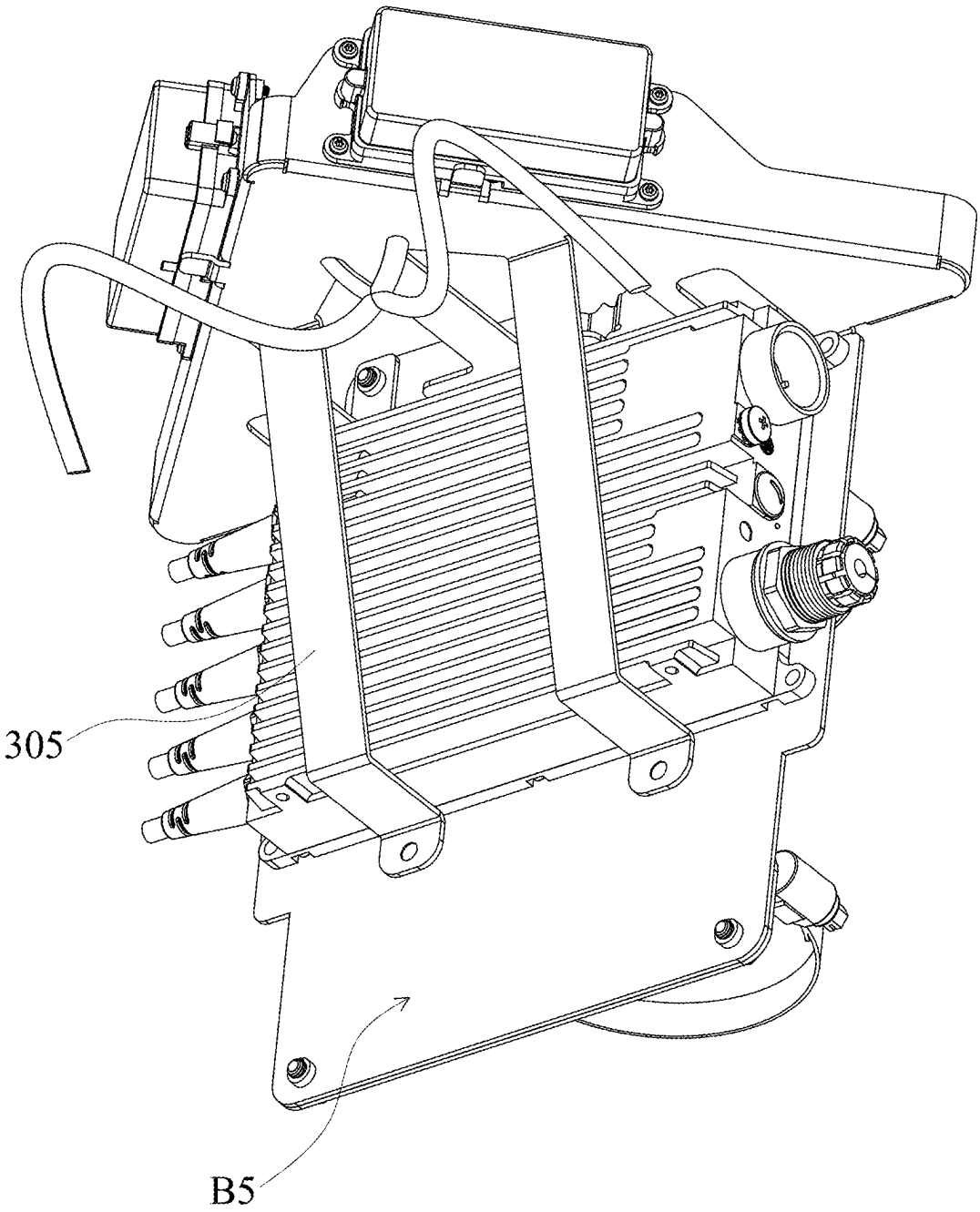

FIG. 5A

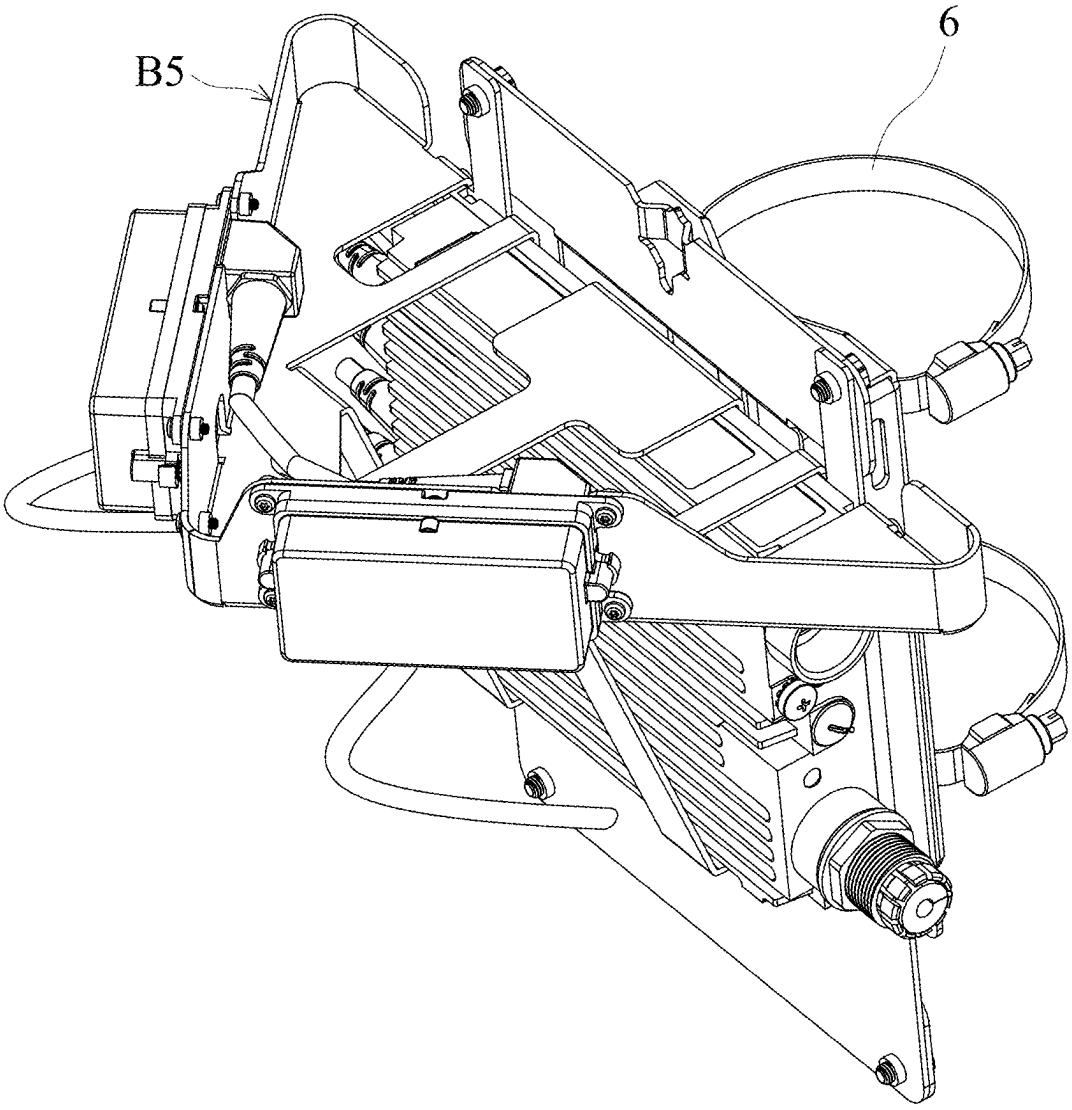

FIG. 5B

COMMUNICATION APPARATUS AND BRACKET THEREOF

CROSS REFERENCE TO RELATED APPLICATIONS

[0001] This application claims priority of Taiwan Patent Application No. 113108331, filed on Mar. 7, 2024, the entirety of which is incorporated by reference herein.

BACKGROUND OF THE INVENTION

Field of the Invention

[0002] The present disclosure relates to a bracket, and, in particular, to a bracket applied to a communication apparatus.

Description of the Related Art

[0003] A communication equipment (e.g., communication base station) commonly comprises a host, multiple communication boxes, and a bracket. The host is arranged on top of the bracket. The communication boxes are coupled to the host and the communication boxes are arranged on the bracket. In order to provide good communication effect, these communication boxes are oriented in different directions. However, with the number and weight of the communication boxes increase, the bracket is not evenly stressed, so the bracket will be deformed, which may not only affect the reception effect, but also affect the life and reliability of the product.

BRIEF SUMMARY OF THE INVENTION

[0004] In response to the above-referenced technical inadequacies, an embodiment of the present disclosure is to provide a communication apparatus comprising a bracket and an electronic device. The bracket comprises a mounting member, a carrying member and a supporting member. A first end of the supporting member is connected to the carrying member, and the second end of the supporting member is connected to the mounting member. The electronic device is mounted on the mounting member.

[0005] In one embodiment, the communication apparatus further comprises at least one communication box, and the communication box is arranged on the carrying member.

[0006] In one embodiment, the mounting member is connected to the carrying member along a fold line, the first end of the supporting member is connected to a first connecting portion of the carrying member, and the second end of the supporting member is connected to a second connecting portion of the mounting member.

[0007] In one embodiment, there is a shortest distance between the first connecting portion and the fold line, and a total length of the supporting member is greater than or equal to 1.2 times of the shortest distance.

[0008] In one embodiment, the first end of the supporting member is connected to the first connecting portion of the carrying member in an integral manner.

[0009] In one embodiment, the second end of the supporting member is connected to the second connecting portion of the mounting member in the form of locking, engaging or welding.

[0010] In one embodiment, the supporting member comprises a first section, a second section and a third section, one end of the first section is connected to the carrying member, the second section is connected to the first section and the third section, the third section is connected to the mounting member, and the second section abuts the electronic device.

[0011] In one embodiment, the carrying member comprises an extended metal element and a carrying metal element, the extended metal element is connected to the mounting member along the fold line, the first connecting portion is arranged on the extended metal element, the carrying metal element is connected to the extended metal element, and the communication box is arranged on the carrying metal element.

[0012] In one embodiment, the communication box comprises a communication box connector, the carrying metal element comprises a notch, and the communication box connector passes through the notch.

[0013] In one embodiment, the communication apparatus further comprises a cable connecting the electronic device and the communication box, the extended metal element comprises an opening, and the cable passes through the opening.

[0014] In one embodiment, the carrying member comprises a tongue piece, which is located at the edge of the extended metal element, and the tongue piece abuts the bottom of the communication box.

[0015] In one embodiment, the carrying metal element is perpendicular to the extended metal element, and the extended metal element is perpendicular to the mounting member.

[0016] In one embodiment, the communication box is lockingly connected to the carrying metal element, and the electronic device is lockingly connected to the mounting member.

[0017] In another embodiment of the present disclosure, a bracket comprising a mounting member, a carrying member and a supporting member. A first end of the supporting member is connected to the carrying member, a second end of the supporting member is connected to the second connecting portion of the mounting member, and the first end of the supporting member is connected to the first connecting portion of the carrying member in an integral manner.

[0018] By employing the bracket according to the embodiments of the present disclosure, the overall structure of the bracket is strengthened as support is provided to both the mounting member and the carrying member by the supporting member. This allows for the accommodation of a greater number of communication boxes and helps prevent deformation of the bracket. As a result, the product lifetime of the communication apparatus can be extended, and its reliability increased.

BRIEF DESCRIPTION OF THE DRAWINGS

[0019] The present invention can be more fully understood by reading the subsequent detailed description and examples with references made to the accompanying drawings, wherein:

[0020] FIG. **1**A is a three-dimensional view of a communication apparatus of a first embodiment of the present disclosure;

[0021] FIG. **1**B shows the detailed structure of a bracket of the first embodiment of the present disclosure;

[0022] FIG. **1**C is another three-dimensional view of the communication apparatus of the first embodiment of the present disclosure;

[0023] FIG. **2**A is a three-dimensional view of a bracket of a second embodiment of the present disclosure;

[0024] FIG. **2**B shows another angle of view of the bracket of the second embodiment of the present disclosure;

[0025] FIG. **3** is a three-dimensional view of a bracket of a third embodiment of the present disclosure;

[0026] FIG. **4** is a three-dimensional view of a bracket of a fourth embodiment of the present disclosure;

[0027] FIG. **5**A is a three-dimensional view of a bracket of a fifth embodiment of the present disclosure; and

[0028] FIG. **5**B shows another angle of view of the bracket of the fifth embodiment of the present disclosure.

DETAILED DESCRIPTION OF THE INVENTION

[0029] The following description is made for the purpose of illustrating the general principles of the disclosure and should not be taken in a limiting sense. The scope of the disclosure is best determined by reference to the appended claims.

[0030] FIG. **1**A is a three-dimensional view of a communication apparatus of a first embodiment of the present disclosure. With reference to FIG. **1**A, the communication apparatus A comprises a bracket B**1** and an electronic device E. The bracket B**1** comprises a mounting member **101**, a carrying member **201** and a supporting member **301**, a first end **391** of the supporting member **301** is connected to the carrying member **201**, and a second end **392** of the supporting member **301** is connected to the mounting member **101**. The electronic device E is mounted on the mounting member **101**. In one embodiment, the electronic device E may be the host of the communication apparatus A.

[0031] With reference to the FIG. **1**A, in one embodiment, the communication apparatus A further comprises at least one communication box C, and the communication box C is arranged on the carrying member **201**.

[0032] FIG. **1**B shows the detailed structure of a bracket of the first embodiment of the present disclosure. With reference to the FIG. **1**B, in one embodiment, the mounting member **101** is connected to the carrying member **201** along a fold line L, the first end **391** of the supporting member **301** is connected to a first connecting portion **21** of the carrying member **201**, and the second end **392** of the supporting member **301** is connected to a second connecting portion **11** of the mounting member **101**.

[0033] With reference to the FIG. **1**B, in one embodiment, there is a shortest distance d between the first connecting portion **21** and the fold line L, and the total length of the supporting member **301** is greater than or equal to 1.2 times of the shortest distance d. In some embodiments, the total length of the support **301** may be greater than or equal to 1.5 times of the shortest distance d.

[0034] With reference to the FIG. **1**B, in one embodiment, the first end **391** of the supporting member **301** is connected to the first connecting portion **21** of the carrying member **201** in an integral manner. In one embodiment of the present disclosure, the mounting member **101**, the carrying member **201** and the supporting member **301** are formed in an integral manner, thereby reducing the number of components, and saving assembly time. In one embodiment, the integral forming may be a process such as punching or cutting a single metal piece to form the required structure.

[0035] With reference to the FIGS. **1**A and **1**B, in one embodiment, the supporting member **301** comprises a first section **31**, a second section **32** and a third section **33**, one end of the first section **31** is connected to the carrying member **201**, the second section **32** is connected to the first section **31** and the third section **33**, the third section **33** is connected to the mounting member **101**, and the second section **32** is abutted to one side or bottom of the electronic device E.

[0036] With reference to the FIG. **1**B, in one embodiment, the mounting member **101** is connected to the carrying member **201** along the fold line L, the connection length between the mounting member **101** and the carrying member **201** (excluding the slotted part, the total length of the connection along the fold line L) can be 26 mm, and the connection position between the mounting member **101** and the carrying member **201** can be appropriately adjusted along the fold line L. The above disclosure does not limit the present disclosure. For example, the connection length between the two mentioned above can also be other dimensions.

[0037] FIG. **1**C is another three-dimensional view of the communication apparatus of the first embodiment of the present disclosure. With reference to the FIGS. **1**B and **1**C, in one embodiment, the carrying member **201** comprises an extended metal element **22** and a carrying metal element **23**, and the extended metal element **22** is connected to the mounting member **101** along the fold line L, the first connecting portion **21** is positioned on the extended metal element **22**, the carrying metal element **23** is connected to the extended metal element **22**, and the communication box C is arranged on the carrying metal element **23**.

[0038] With reference to the FIGS. **1**B and **1**C, in one embodiment, the communication box C comprises a communication box connecting port **41**, the carrying metal element **23** comprises a notch **231**, and the communication box connecting port **41** passes through the notch **231**.

[0039] With reference to the FIGS. **1**A, **1**C, in one embodiment, the communication apparatus A further comprises a cable **5**, the cable **5** connects the electronic device E and the communication box C, and the extended metal element **22** comprises an opening **221**, and the cable **5** passes through the opening **221**.

[0040] With reference to FIGS. **1**A and **1**B, in one embodiment, the carrying member **201** comprises a tongue piece **24**, the tongue piece **24** is arranged on the edge of the extended metal element **22**, and the tongue piece **24** abuts the bottom of the communication box C. Thus, this tongue piece **24** can provide support for the communication box C.

[0041] With reference to FIGS. **1**A and **1**B, in one embodiment, the carrying metal element **23** is perpendicular to the extended metal element **22**, and the extended metal element **22** is perpendicular to the mounting member **101**.

[0042] With reference to FIG. **1**A, in one embodiment, the communication box C is lockingly connected to the carrying metal element **23**, and the electronic device E is lockingly connected to the mounting member **101**.

[0043] With reference to FIG. **1**C, in one embodiment, the mounting member **101** further comprises a mounting portion **12**. A screw can pass through the mounting portion **12** to fix the mounting member **101** on a wall surface or other fixed surface.

[0044] FIG. **2**A is a three-dimensional view of a bracket of a second embodiment of the present disclosure. FIG. **2**B shows another angle of view of the bracket of the second embodiment of the present disclosure. With reference to

FIGS. **2**A and **2**B, in one embodiment, a second end **392**A of a supporting member **302** of a bracket B**2** is engaged with a second connecting portion **11**A of a mounting member **102**. In this embodiment, the second connecting portion **11**A is a slot.

[0045] FIG. **3** is a three-dimensional view of a bracket of a third embodiment of the present disclosure. With reference to FIG. **3**, in one embodiment, a second end **392**B of a supporting member **303** of a bracket B**3** is engaged with a second connecting portion **11**B of a mounting member **103**. In this embodiment, the second connecting portion **11**B is a hook.

[0046] FIG. **4** is a three-dimensional view of a bracket of a fourth embodiment of the present disclosure. With reference to FIG. **4**, in one embodiment, a second end **392**C of a supporting member **304** of a bracket B**4** is connected to a second connecting portion **11**C of a mounting member **104** by a screw **5**.

[0047] With reference to FIGS. **1**A and **4**, in the embodiment of the FIG. **1**A, the carrying member **201** is substantially rectangular, and as shown in the FIG. **4**, the carrying member **204** is substantially triangular, and the above disclosure does not limit the present disclosure. In another embodiment, the shape of the carrying member **204** may vary moderately.

[0048] FIG. **5**A is a three-dimensional view of a bracket of a fifth embodiment of the present disclosure. With reference to the FIG. **5**A, in one embodiment, the bracket B**5** comprises two supporting members **305**. Increasing the number of the supporting member **305** can provide a stronger support effect.

[0049] FIG. **5**B shows another angle of view of the bracket of the fifth embodiment of the present disclosure. With reference to FIG. **5**B, in the embodiment, the bracket B**5** can be fixed on a fixed rod through a collar **6**, and the above disclosure does not limit the present disclosure.

[0050] By applying the bracket according to the embodiment of the present disclosure, since the mounting member and the carrying member are supported by the supporting member, the overall structure of the bracket is strengthened, can carry a larger number of communication boxes, and avoid the situation that the bracket is deformed. This extends the product lifetime of communication apparatus and improves reliability.

[0051] While the disclosure has been described by way of example and in terms of the preferred embodiments, it should be understood that the disclosure is not limited to the disclosed embodiments. On the contrary, it is intended to cover various modifications and similar arrangements (as would be apparent to those skilled in the art). Therefore, the scope of the appended claims should be accorded the broadest interpretation so as to encompass all such modifications and similar arrangements.

What is claimed is:

1. A communication apparatus, comprising:

a bracket, comprising a mounting member, a carrying member and a supporting member, a first end of the supporting member is connected to the carrying member, a second end of the supporting member is connected to the mounting member; and

an electronic device, disposed on the mounting member.

2. The communication apparatus as claimed in claim **1**, further comprising:

at least one communication box, and the communication box is arranged on top of the carrying member.

3. The communication apparatus as claimed in claim **2**, wherein the mounting member is connected to the carrying member along a fold line, the first end of the supporting member is connected to a first connecting portion of the carrying member, and the second end of the supporting member is connected to a second connecting portion of the mounting member.

4. The communication apparatus as claimed in claim **3**, wherein there is a shortest distance between the first connecting portion and the fold line, and a total length of the supporting member is greater than or equal to 1.2 times of the shortest distance.

5. The communication apparatus as claimed in claim **3**, wherein the first end of the supporting member is connected to the first connecting portion of the carrying member in an integral manner.

6. The communication apparatus as claimed in claim **5**, wherein the second end of the supporting member is connected to the second connecting portion of the mounting member in the form of locking, engaging or welding.

7. The communication apparatus as claimed in claim **5**, wherein the supporting member comprises a first section, a second section and a third section, one end of the first section is connected to the carrying member, the second section is connected to the first section and the third section, the third section is connected to the mounting member, and the second section abuts the electronic device.

8. The communication apparatus as claimed in claim **5**, wherein the carrying member comprises an extended metal element and a carrying metal element, the extended metal element is connected to the mounting member along the fold line, the first connecting portion is positioned on the extended metal element, the carrying metal element is connected to the extended metal element, and the communication box is arranged on the carrying metal element.

9. The communication apparatus as claimed in claim **8**, wherein the communication box comprises a communication box connector, the carrying metal element comprises a notch, and the communication box connector passes through the notch.

10. The communication apparatus as claimed in claim **8**, further comprising a cable connecting the electronic device and the communication box, the extended metal element comprises an opening, and the cable passes through the opening.

11. The communication apparatus as claimed in claim **8**, wherein the carrying member comprises a tongue piece, which is arranged on the edge of the extended metal element, and the tongue piece abuts the bottom of the communication box.

12. The communication apparatus as claimed in claim **8**, wherein the carrying metal element is perpendicular to the extended metal element, and the extended metal element is perpendicular to the mounting member.

13. The communication apparatus as claimed in claim **8**, wherein the communication box is lockingly connected to the carrying metal element, and the electronic device is lockingly connected to the mounting member.

14. A bracket, comprising:

a mounting member;

a carrying member; and

a supporting member, a first end of the supporting member is connected to the carrying member, a second end of the supporting member is connected to a second connecting portion of the mounting member, and the first end of the supporting member is connected to a first connecting portion of the carrying member in an integral manner.

15. The bracket as claimed in claim **14**, wherein the mounting member is connected to the carrying member along a fold line, there is a shortest distance between the first connecting portion and the fold line, and a total length of the supporting member is greater than or equal to 1.2 times of the shortest distance.

16. The bracket as claimed in claim **14**, wherein the carrying member is perpendicular to the mounting member.

17. The bracket as claimed in claim **16**, wherein the second end of the supporting member is connected to the second connecting portion of the mounting member in the form of locking, engaging or welding.

18. The bracket as claimed in claim **17**, wherein the carrying member comprises an extended metal element and a carrying metal element, the extended metal element is connected to the mounting member along the fold line, the first connecting portion is positioned on the extended metal element, the carrying metal element is connected to the extended metal element, the carrying metal element is perpendicular to the extended metal element, and the extended metal element is perpendicular to the mounting member.

19. The bracket as claimed in claim **18**, wherein the supporting member comprises a first section, a second section and a third section, one end of the first section is connected to the carrying member, the second section is connected to the first section and the third section, the third section is connected to the mounting member, the second section is parallel to the extended metal element.

* * * * *