US012410762B2

(12) **United States Patent**
Lin et al.

(10) **Patent No.: US 12,410,762 B2**
(45) **Date of Patent: Sep. 9, 2025**

(54) **TOOLS AND METHODS FOR FORMING ACOUSTIC CORES**

(71) Applicant: **General Electric Company**, Schenectady, NY (US)

(72) Inventors: **Wendy Wenling Lin**, Montgomery, OH (US); **David Herman**, Beavercreek, OH (US); **Trevor Howard Wood**, Clifton Park, NY (US); **Nikolai N. Pastouchenko**, Latham, NY (US); **Kishore Ramakrishnan**, Rexford, NY (US); **Timothy Richard DePuy**, Liberty Township, OH (US); **Robert William Davidoff**, Carnegie, PA (US)

(73) Assignee: **General Electric Company**, Evandale, OH (US)

(*) Notice: Subject to any disclaimer, the term of this patent is extended or adjusted under 35 U.S.C. 154(b) by 0 days.

(21) Appl. No.: **18/639,511**

(22) Filed: **Apr. 18, 2024**

(65) **Prior Publication Data**

US 2024/0280067 A1 Aug. 22, 2024

Related U.S. Application Data

(62) Division of application No. 17/338,073, filed on Jun. 3, 2021, now Pat. No. 11,970,992.

(51) **Int. Cl.**
F02K 1/82 (2006.01)
F03D 80/00 (2016.01)
(Continued)

(52) **U.S. Cl.**
CPC ***F02K 1/827*** (2013.01); ***F03D 80/00*** (2016.05); ***G10K 11/161*** (2013.01);
(Continued)

(58) **Field of Classification Search**
CPC ... F02C 7/045; F02C 7/24; B32B 3/12; F02K 1/827; F05D 2250/282; G10K 11/172
See application file for complete search history.

(56) **References Cited**

U.S. PATENT DOCUMENTS

3,035,657 A 5/1962 Lemon
3,070,198 A 12/1962 Haskell
(Continued)

FOREIGN PATENT DOCUMENTS

EP 0405581 B1 10/1993
EP 0839101 B1 1/2002
(Continued)

OTHER PUBLICATIONS

U.S. Appl. No. 16/938,150, filed Jul. 24, 2020.
(Continued)

Primary Examiner — Jeremy A Luks
(74) *Attorney, Agent, or Firm* — McGarry Bair PC

(57) **ABSTRACT**

An acoustic core may include an array of resonant cells configured as a plurality of resonant cell groups. The resonant cell groups may include a plurality of resonant cells configured as a partitioned resonant cell that include a converging resonant cell and a diverging resonant cell. The converging resonant cell and the diverging resonant cell may be defined by a plurality of cell walls integrally formed with one another and a partition integrally formed with the plurality of cell walls. The partition may at least partially delimit the converging resonant cell from the diverging resonant cell. The converging resonant cell may define an upper resonant space delimited by the partition and a top face of the array of resonant cells. The diverging resonant cell may define a lower resonant space delimited by the partition and a bottom face of the array of resonant cells.

20 Claims, 37 Drawing Sheets

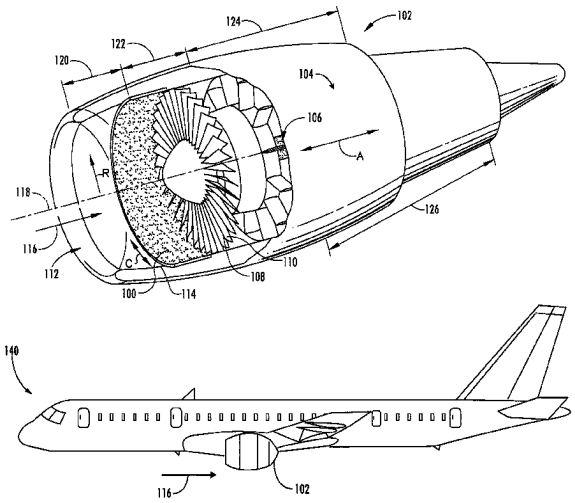

(51) **Int. Cl.**

G10K 11/16	(2006.01)
G10K 11/172	(2006.01)
B33Y 80/00	(2015.01)

(52) **U.S. Cl.**

CPC ***G10K 11/172*** (2013.01); *B33Y 80/00* (2014.12); *F05B 2260/96* (2013.01); *F05D 2260/963* (2013.01)

(56) **References Cited**

U.S. PATENT DOCUMENTS

3,232,371 A 2/1966 Reichert et al.
3,734,234 A 5/1973 Wirt
3,803,754 A 4/1974 Fischer
3,819,007 A 6/1974 Wirt et al.
3,819,009 A 6/1974 Motsinger
3,821,999 A 7/1974 Guess et al.
3,831,710 A 8/1974 Wirt
3,850,261 A 11/1974 Hehmann et al.
3,887,031 A 6/1975 Wirt
3,905,443 A 9/1975 Sieuzac
3,913,702 A 10/1975 Wirt et al.
4,001,473 A 1/1977 Cook
4,035,535 A 7/1977 Taylor
4,074,496 A 2/1978 Fischer
4,100,993 A 7/1978 Feder
4,141,433 A 2/1979 Warnaka
4,243,117 A 1/1981 Warnaka
4,265,955 A 5/1981 Harp et al.
4,291,080 A 9/1981 Ely et al.
4,298,090 A 11/1981 Chapman
4,339,018 A 7/1982 Warnaka
4,551,110 A 11/1985 Selvage et al.
4,676,762 A 6/1987 Ballard
5,353,502 A 10/1994 Hattori et al.
5,445,861 A 8/1995 Newton et al.
5,480,729 A 1/1996 Hattori et al.
5,690,035 A 11/1997 Hatayama et al.
5,760,349 A 6/1998 Borchers et al.
5,959,264 A 9/1999 Bruck et al.
6,122,892 A 9/2000 Gonidec et al.
6,182,787 B1 2/2001 Kraft et al.
6,200,664 B1 3/2001 Figge et al.
6,203,656 B1 3/2001 Syed
6,206,136 B1 3/2001 Swindlehurst et al.
6,209,679 B1 4/2001 Hogeboom et al.
6,256,959 B1 7/2001 Palmersten
6,630,093 B1 10/2003 Jones
6,772,857 B2 8/2004 Porte et al.
6,840,349 B2 1/2005 Andre et al.
6,871,725 B2 3/2005 Johnson
6,884,486 B2 4/2005 Estrin et al.
6,913,570 B2 7/2005 Kehrle
7,410,455 B2 8/2008 Akishev et al.
7,484,592 B2 2/2009 Porte et al.
7,510,052 B2 3/2009 Ayle
7,819,224 B2 10/2010 Borchers et al.
7,866,377 B2 1/2011 Slaughter
7,906,205 B2 3/2011 Meres
7,921,966 B2 4/2011 Chiou et al.
7,935,205 B2 5/2011 Bogue et al.
7,954,224 B2 6/2011 Douglas
7,963,362 B2 6/2011 Lidoine
7,967,108 B2 6/2011 Harper
7,971,684 B2 7/2011 Gantie et al.
8,016,230 B2 9/2011 Fogarty et al.
8,047,326 B2 11/2011 Valleroy et al.
8,464,831 B2 6/2013 Olander Burak et al.
8,579,076 B2 11/2013 Ayle et al.
8,651,233 B2 2/2014 Ayle
8,689,936 B2 4/2014 Richter
8,784,592 B2 7/2014 Kolax et al.
8,789,652 B2 7/2014 Swallowe et al.
8,833,515 B2 * 9/2014 Todorovic F02C 7/24 181/292
8,905,189 B2 12/2014 Ayle et al.
8,985,513 B2 3/2015 Dean et al.
8,997,923 B2 4/2015 Ichihashi
9,175,474 B2 11/2015 May et al.
9,222,229 B1 12/2015 Chang et al.
9,284,726 B2 3/2016 Tien
9,290,274 B2 3/2016 Roach et al.
9,296,044 B2 3/2016 Douglas
9,302,869 B2 4/2016 Kendrick et al.
9,365,022 B2 6/2016 Kendrick et al.
9,378,721 B2 6/2016 Zalewski et al.
9,514,734 B1 12/2016 Jones et al.
9,546,602 B2 1/2017 Julliard et al.
9,607,600 B2 3/2017 Swallowe et al.
9,693,166 B2 6/2017 Herrera et al.
9,759,447 B1 9/2017 Mathur
9,909,471 B2 3/2018 Mattia
9,978,354 B2 5/2018 Nampy
9,994,302 B2 6/2018 Merlo et al.
10,032,445 B1 7/2018 Linch et al.
10,094,242 B2 10/2018 Holland et al.
10,107,139 B1 10/2018 Jones et al.
10,174,675 B2 1/2019 Martinez et al.
10,280,839 B2 5/2019 Riou et al.
10,294,815 B2 5/2019 Runyan et al.
10,332,501 B2 6/2019 Lin et al.
10,414,481 B2 9/2019 Pierick et al.
10,436,118 B2 * 10/2019 Weaver F02C 7/045
10,823,059 B2 11/2020 Herman et al.
11,339,720 B2 5/2022 Van Ness et al.
11,428,191 B1 8/2022 Alonso-Miralles et al.
11,686,247 B2 6/2023 Desjoyeaux et al.
2001/0048027 A1 12/2001 Walsh
2004/0048027 A1 3/2004 Hayes et al.
2010/0307867 A1 12/2010 Ogawa et al.
2011/0100749 A1 5/2011 Nonogi et al.
2011/0244213 A1 10/2011 Jones
2012/0156006 A1 6/2012 Murray et al.
2013/0306402 A1 11/2013 Todorovic
2014/0133964 A1 5/2014 Ayle
2014/0251481 A1 9/2014 Kroll et al.
2014/0305529 A1 10/2014 Kroll et al.
2014/0341744 A1 11/2014 Cazuc et al.
2015/0027629 A1 1/2015 Butler et al.
2015/0044413 A1 2/2015 Vauchel et al.
2015/0064015 A1 3/2015 Perez
2015/0110603 A1 4/2015 Biset et al.
2015/0292413 A1 10/2015 Soria et al.
2015/0367953 A1 12/2015 Yu et al.
2015/0373470 A1 12/2015 Herrera et al.
2016/0010863 A1 1/2016 Ott et al.
2016/0017775 A1 1/2016 Mattia
2016/0017810 A1 1/2016 Lord et al.
2016/0067938 A1 3/2016 Goodrich
2016/0109130 A1 4/2016 Stastny et al.
2016/0123160 A1 5/2016 Strock et al.
2016/0319690 A1 11/2016 Lin et al.
2017/0043550 A1 2/2017 Coïc et al.
2017/0045059 A1 2/2017 Care et al.
2017/0072638 A1 3/2017 Hayes et al.
2017/0122341 A1 5/2017 Alonso-Miralles et al.
2017/0191414 A1 7/2017 Martinez et al.
2018/0016987 A1 1/2018 Howarth et al.
2018/0162542 A1 6/2018 VanDeMark et al.
2018/0174568 A1 6/2018 Porte et al.
2018/0218723 A1 8/2018 Lin et al.
2018/0245516 A1 8/2018 Howarth et al.
2019/0063318 A1 2/2019 Roach et al.
2019/0080679 A1 3/2019 Alstad
2019/0264637 A1 8/2019 Cariou
2019/0270504 A1 9/2019 Cedar et al.
2020/0049068 A1 2/2020 Lin et al.
2020/0109664 A1 4/2020 Herman et al.

(56) **References Cited**

U.S. PATENT DOCUMENTS

2020/0309028	A1*	10/2020	Murugappan	F02K 1/827
2022/0199064	A1	6/2022	Quesada et al.	

FOREIGN PATENT DOCUMENTS

EP	2466095	A2	6/2012
EP	2466095	B1	3/2015
EP	2960023	A1	12/2015
EP	3232434	A1	10/2017
JP	S58156052	U	10/1983
JP	H0333897	B2	5/1991
WO	2016133501	A1	8/2016

OTHER PUBLICATIONS

"Bertolucci, An Experimental Investigation of the Grazing Flow Impedance Duct at theUniversity of Florida for Acoustic Liner Applications, University of Florida Dissertation, 2012, 217 Pages."

Bielak et al., Advanced Nacelle Acoustic Lining Concepts Development, NASA, CR-2002- 211672, Aug. 2002, Total pp. 203.

Dai et al., Acoustic of a Perforated Liner with Grazing Flow: Floquet-Bloch Periodical ApproachVersus Impedance Continuous Approach, Research Gate, The Journal of the Acoustical Society of America, Sep. 2016, 10 Pages.

"Dannemann et al., Experimental Study of Advanced Helmholtz Resonator Liners with Increased Acoustic Performance by Utilising Material Damping Effects, Applied Sciences, 2018, 18 Pages."

Jones et al., Evaluation of Parallel-Element, Variable-Impedance, Broadband Acoustic Liner Concepts, AIAA-2012-2194, Jun. 2012, 17 Pages.

Kraft et al., Acoustic Treatment Design Scaling Methods, vol. 2: Advanced Treatment Impedance Models for High Frequency Ranges, NASA, CR-1999-209120, vol. 2, 1999, Total pp. 98.

Lawn, Acoustic Pressure Losses in Woven Screen Regenerators, ResearchGate, Applied Acoustics, vol. 77, Mar. 2014, pp. 42-48.

Malmary et al., Acoustic Impedance Measurement with Grazing Flow, AIAA-2001-2193, 7th AIAA/CEAS Aeroacoustics Conference, May 2001, Netherlands, 9 Pages.

Martinson, Mechanical Design for 3D Printing, Nov. 2012, 15 pages. http://eikhna1tinson.co1n/e1urineerhur/3i:.jparis/#drJvetail.

Motsinger et al., Design and Performance of Duct Acoustic Treatment, NASA, N92-14783, 1991, pp. 165-206.

Nark et al., Acoustic Liner Overview, Acoustics Technical Working Group Meeting, Nasa Langley Research Center, Cleveland, Oct. 22-23, 2019, pp. 1-25.

Primus et al., ONERA-NASA Cooperative Effort on Liner Impedance Education, AIAA 2013- 2273, Research Gate, 19th AIAA/CEAS Aeroacoustics Conference, May 2013, Germany, 16 Pages.

Schiller et al., Experimental Evaluation of Acoustic Engine Liner Models Developed with COMSOL Multiphysics, 23rd American Institute of Aeronautics and Astronautics, DEAS Aeroacoustics Conference, NASA, 2017, 25 Pages.

Sellen et al., Noise Reduction In a Flow Duct: Implementation of a Hybrid Passive/Active Solution, Science Direct, Journal of Sound and Vibration, vol. 297, 2006, pp. 492-511.

Soderman et al., Design and Development of a Deep Acoustic Lining for the 40-by 80 Foot Wind Tunnel Test Station, NASA TP-2002-211850, Nov. 2002, 61 Pages.

"Syed et al., Paper No. 07ATC-43 Development of the Acousti-Cap TM Technology Double-Layer Acoustic Liners in Aircraft Engine Nacelles, Research Gate, 2007 SAE International, 23 Pages."

Tam et al., Experimental Validation of Numerical Simulations for An Acoustic Liner in Grazing Flow, 30 Pages.

"Tam et al., Numerical Simulation of a Slit Resonator in a Grazing Flow, AIAA 2006-799, 44thAIAA Aerospace Meeting and Exhibit, Nevada, 2006, 20 Pages."

Zhang, Numerical Simulation of Two-Dimensional Acoustic Liners with High Speed Grazing Flow, MS Thesis, Urbana, Illinois, 2010, 90 Pages.

Zhou, Acoustic Characterization of Orifices and Perforated Liners with Flow and High-Level Acoustic Excitation, DiVA Digitala Vetenskapliga Arkivet, KTH Royal Institute of Technology School of Engineering Sciences (SCI), Aeronautical and Vehicle Engineering, MWL Flow Acoustics, Doctoral Thesis, Stockholm, p. vi, 2015, 70 Pages.

* cited by examiner

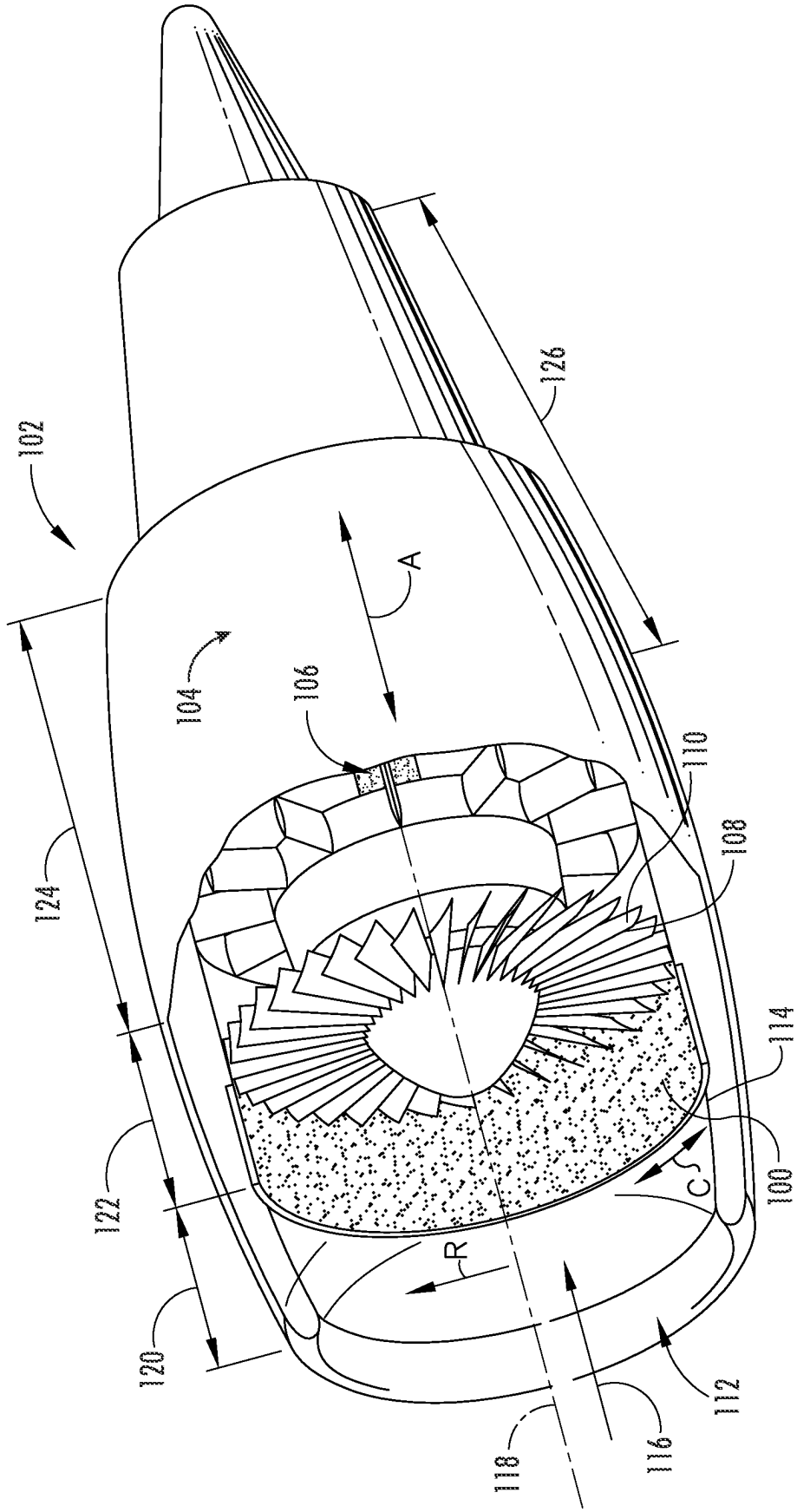

FIG. 1A

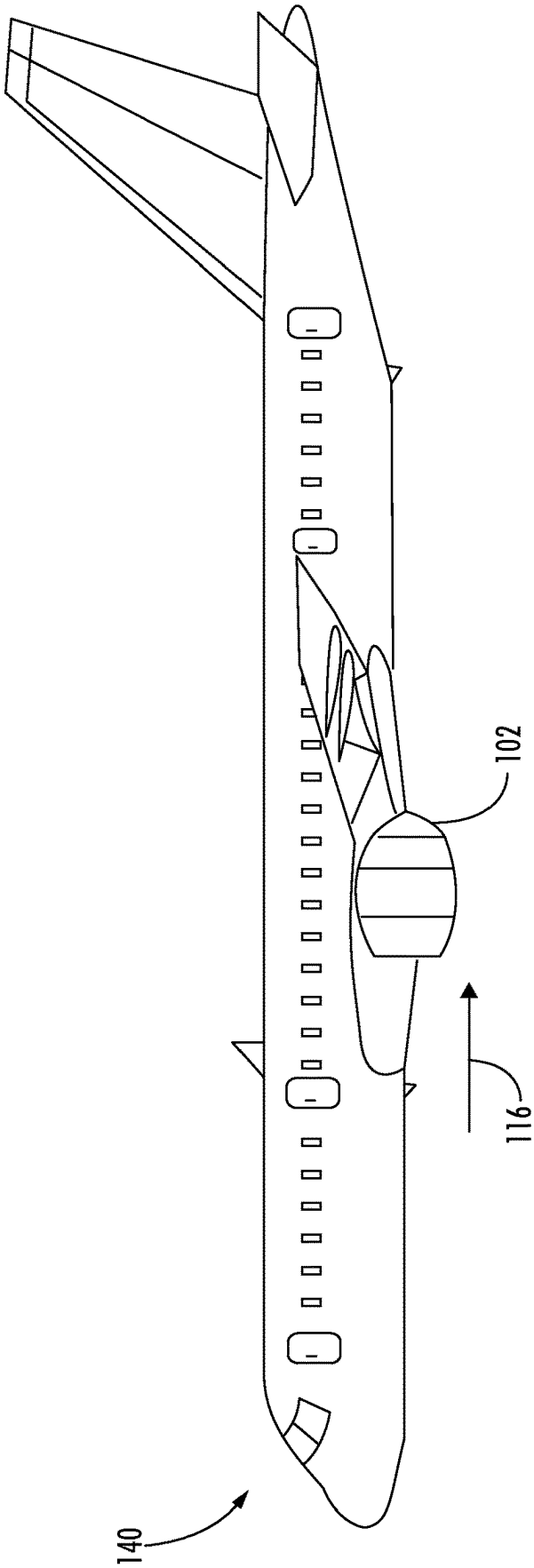

FIG. 1B

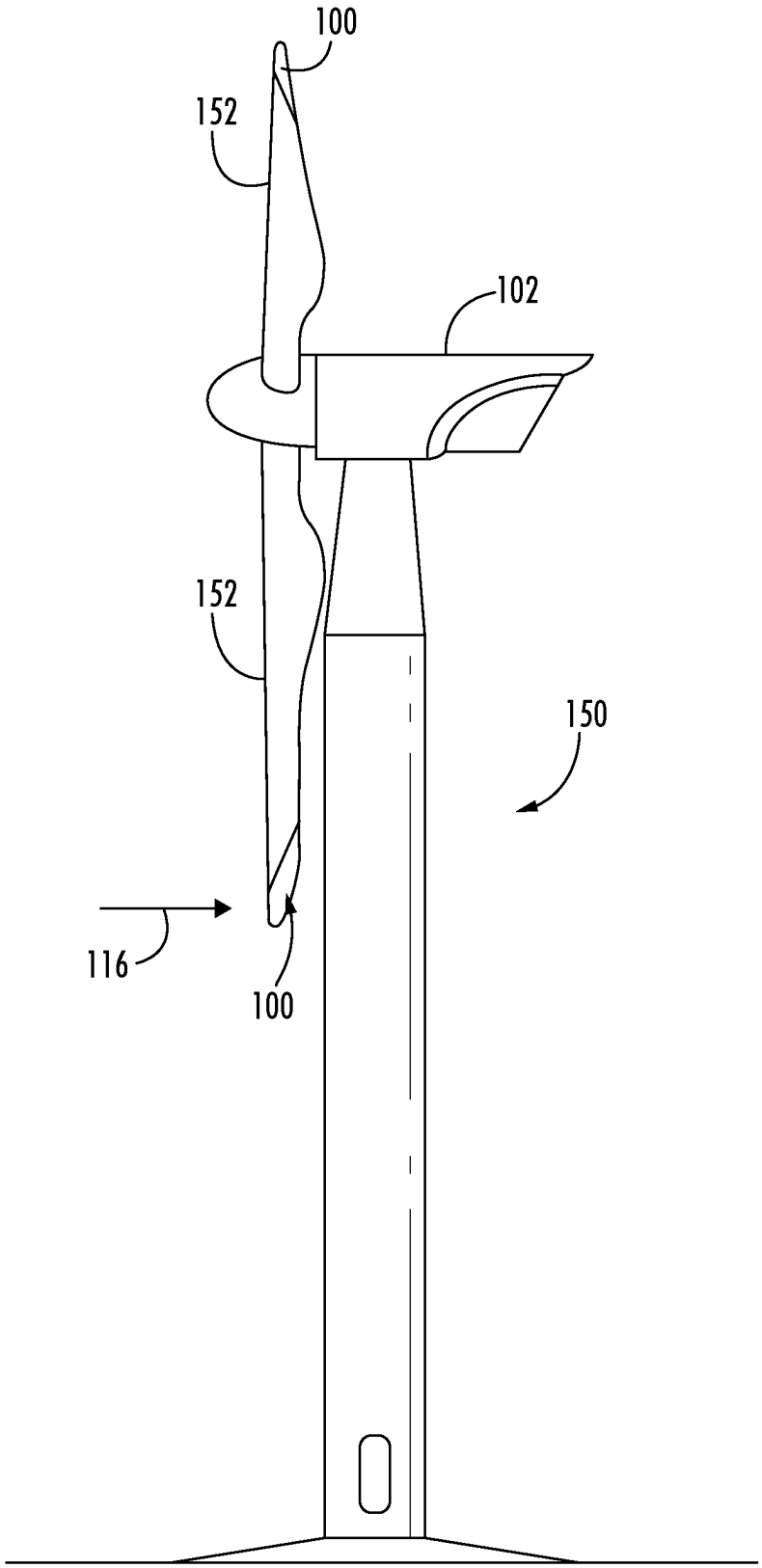

FIG. 1C

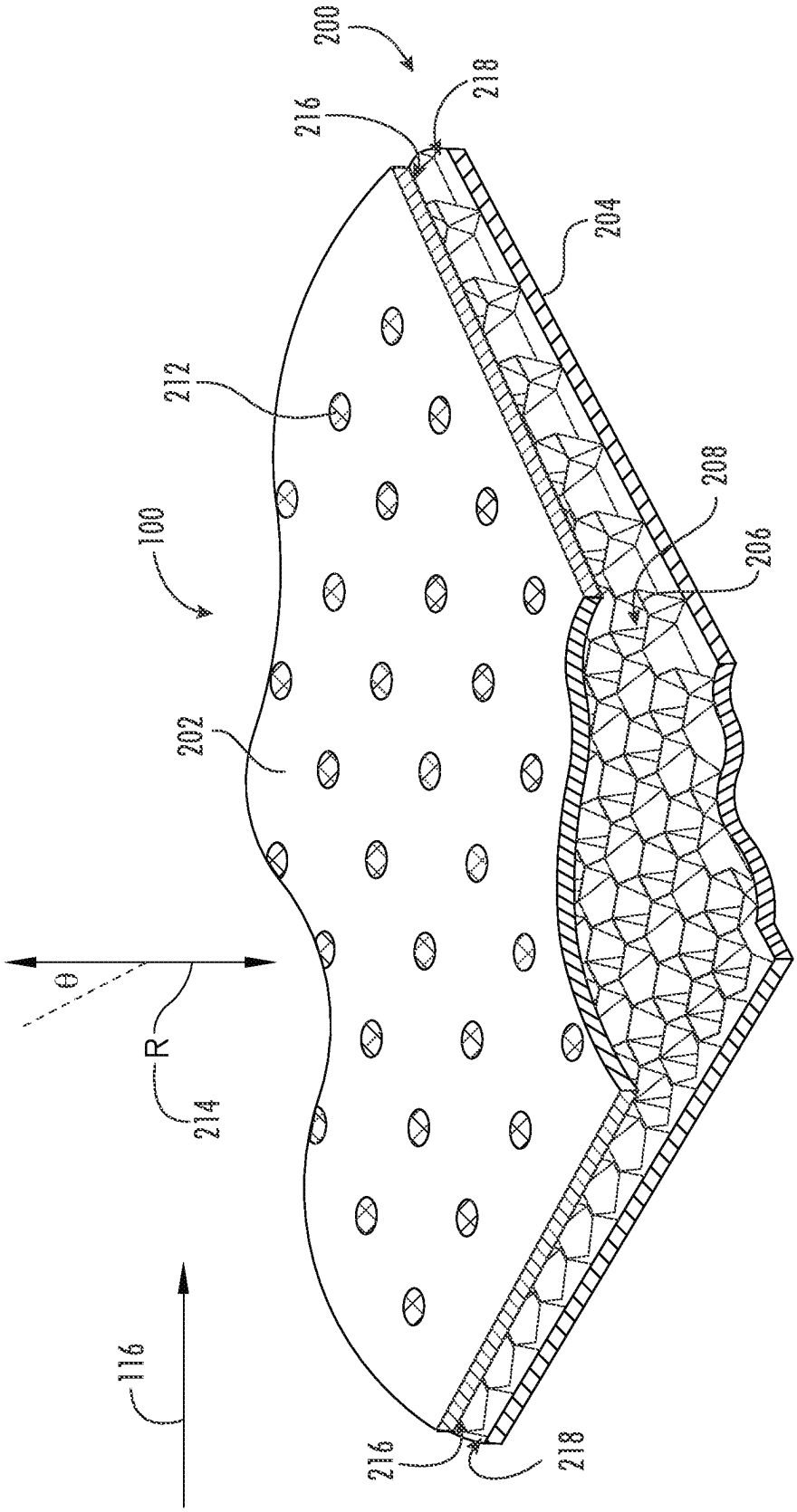

FIG. 2

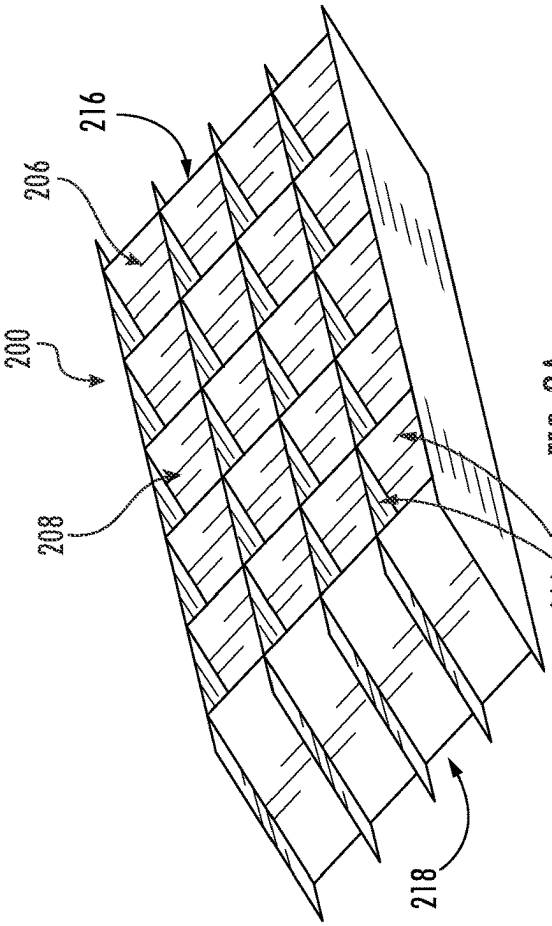

FIG. 3A

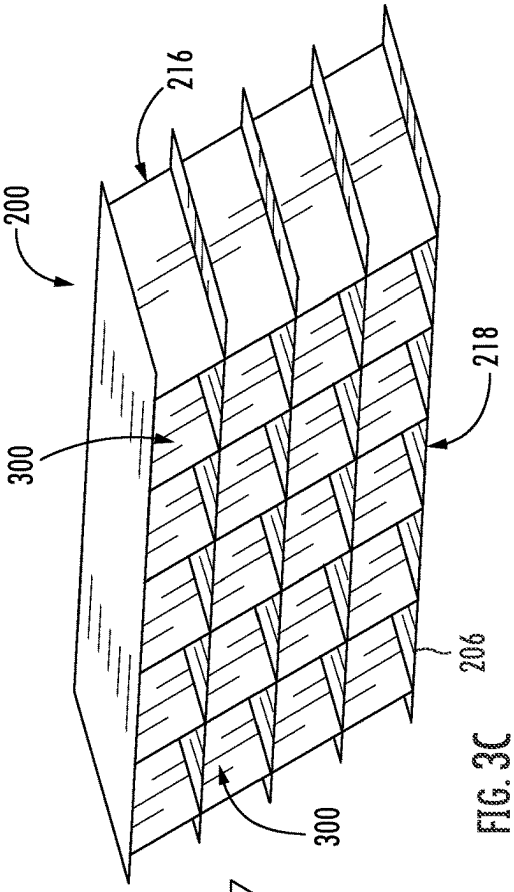

FIG. 3C

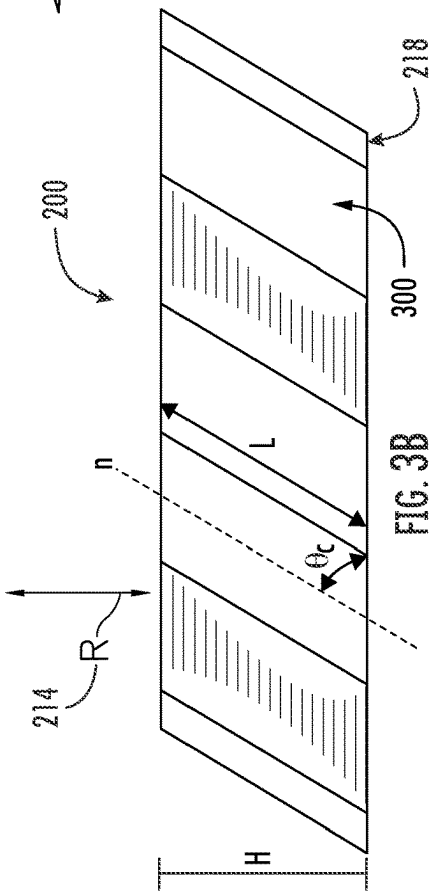

FIG. 3B

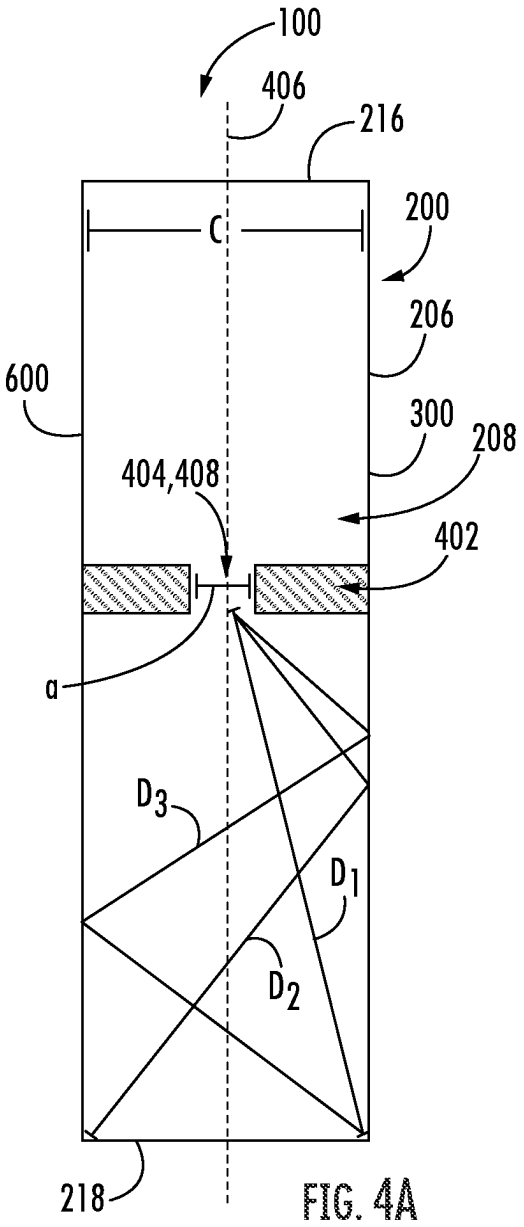
100
406
216
C
200
206
600
300
208
404,408
402
a
D3
D1
D2
218

FIG. 4A

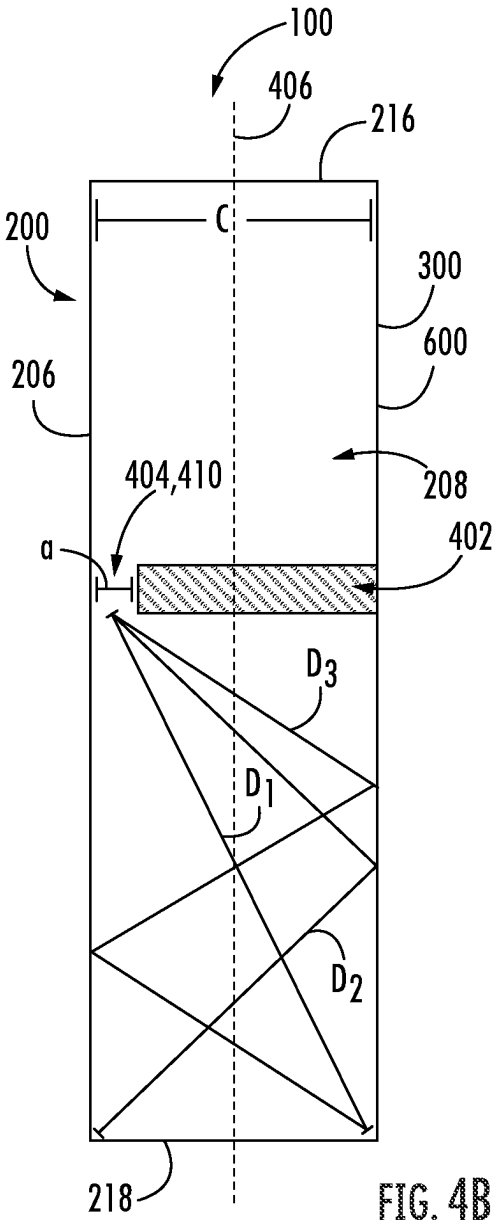
100
406
216
C
200
300
600
206
208
404,410
402
a
D3
D1
D2
218

FIG. 4B

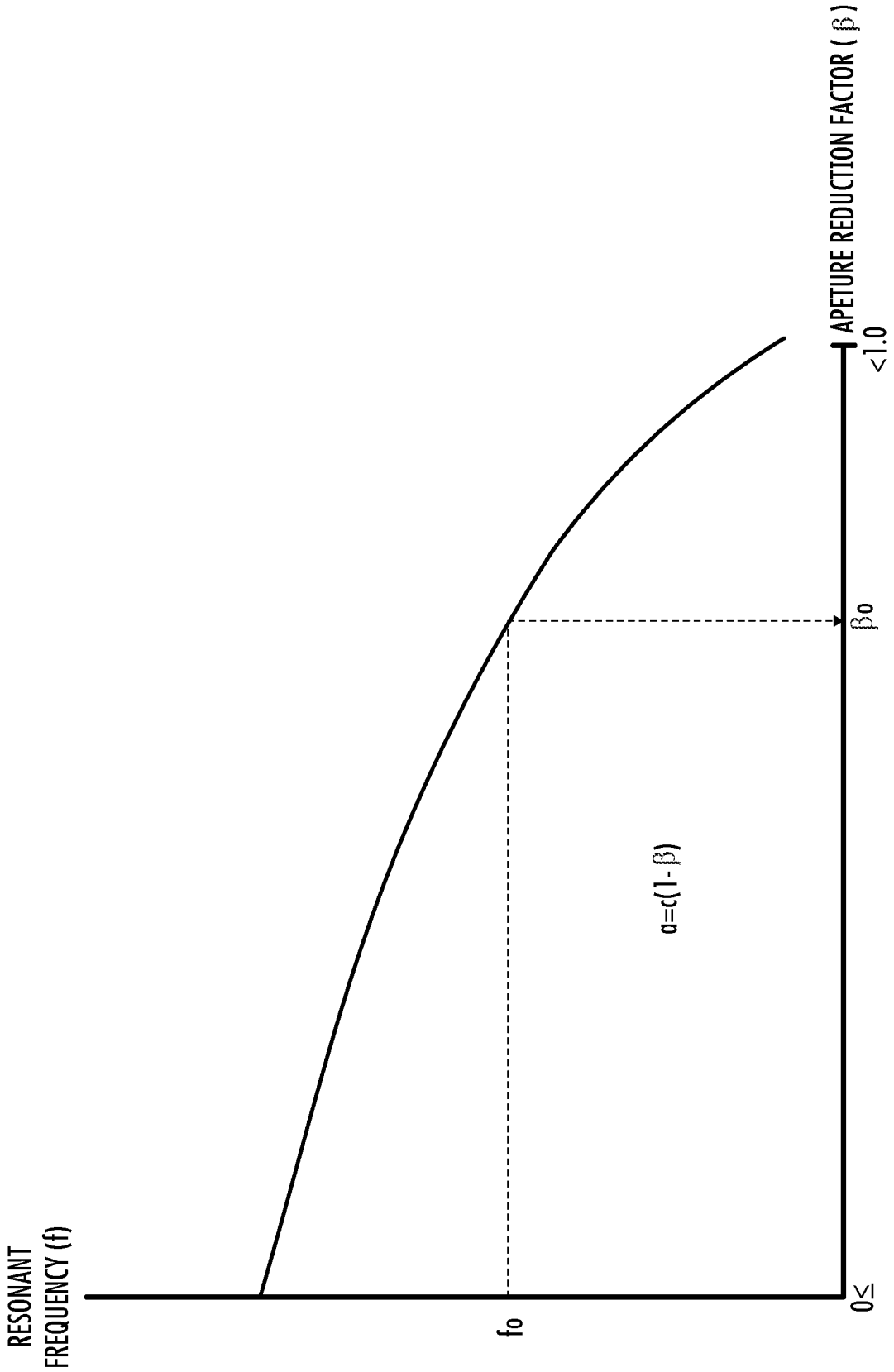
RESONANT FREQUENCY (f)
fo
α=c(1-β)
0≤
βo
<1.0
APETURE REDUCTION FACTOR (β)

FIG. 5

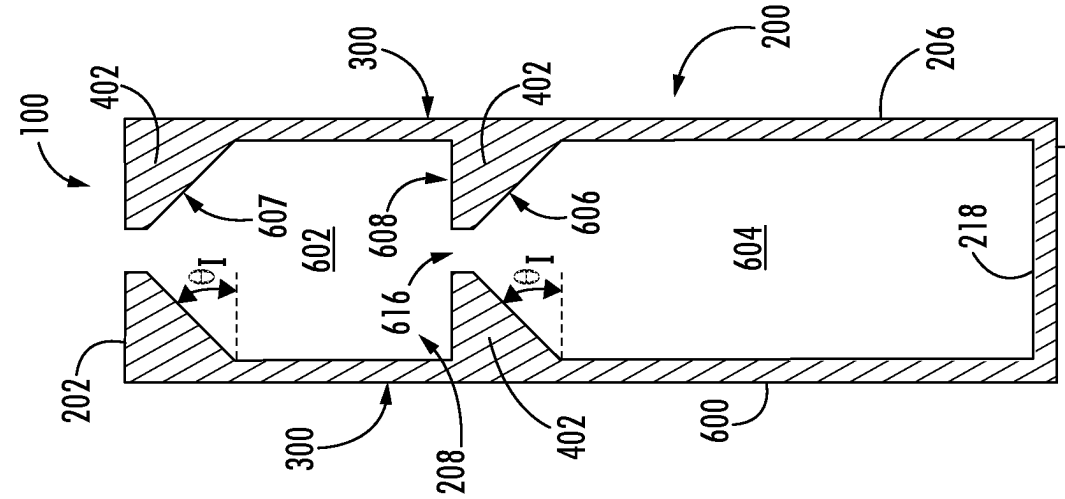

FIG. 6C

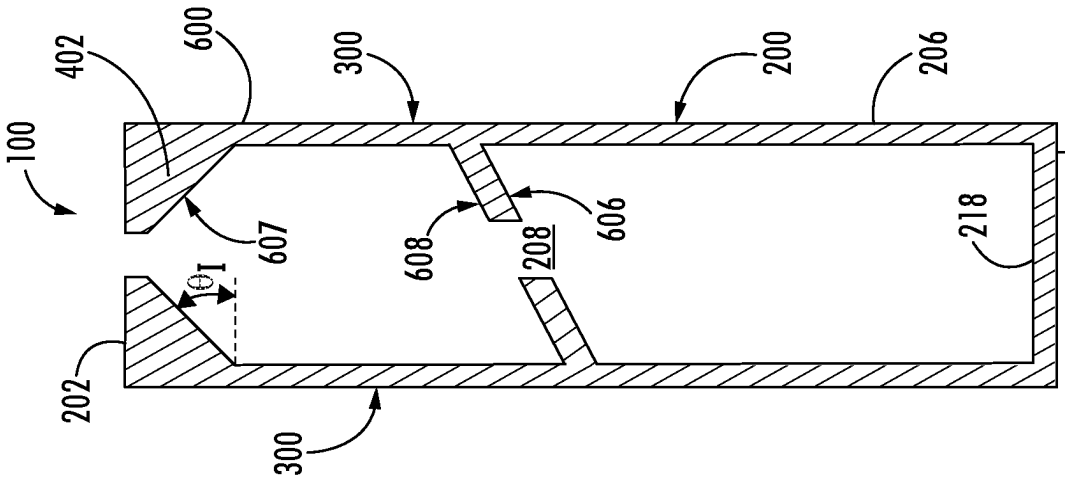

FIG. 6B

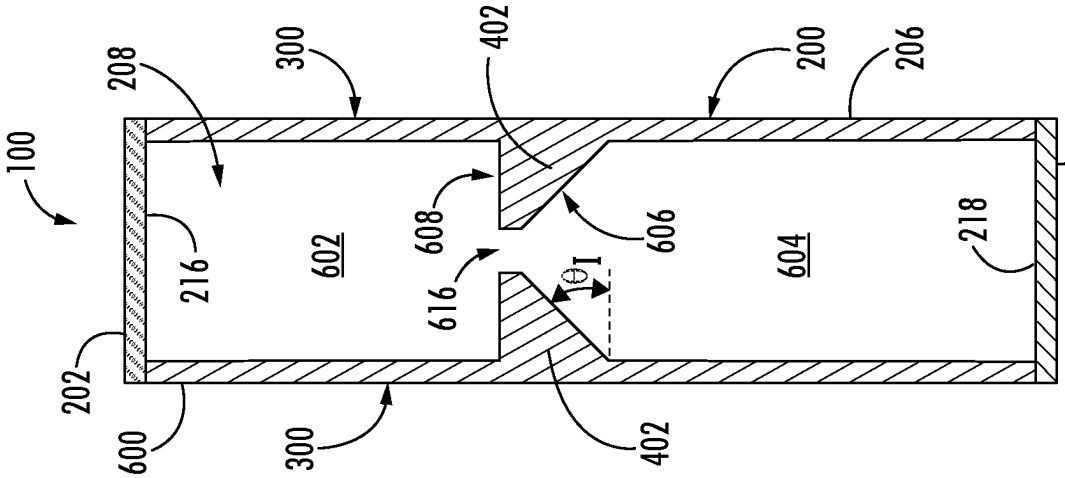

FIG. 6A

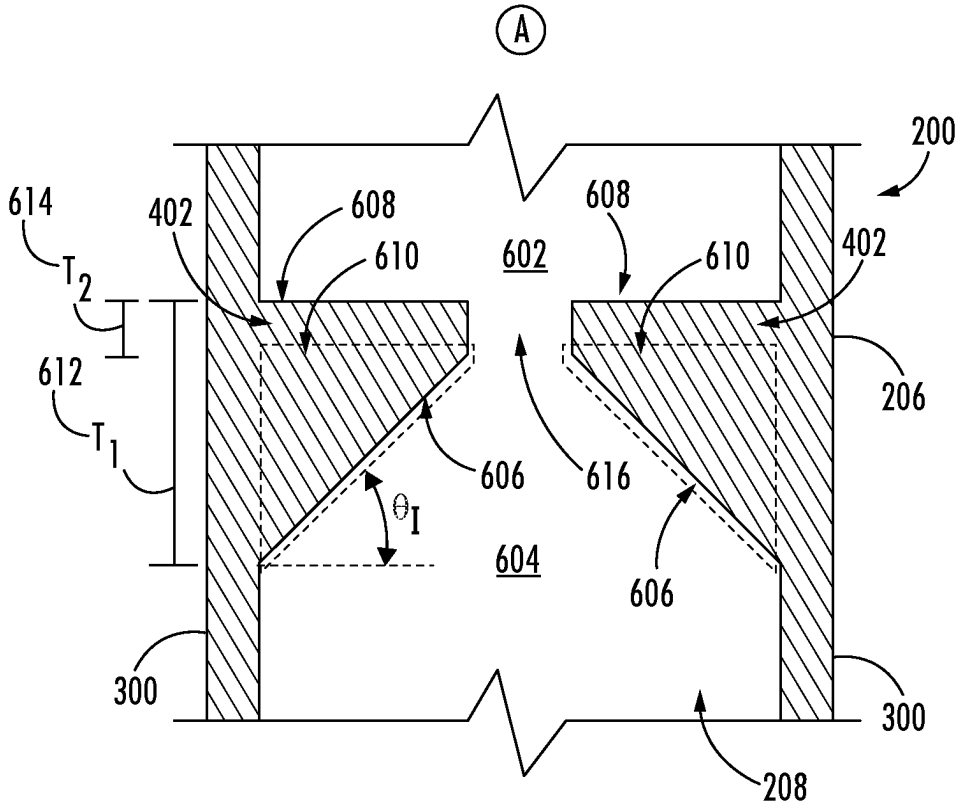
A
200
614
402
608
610
602
608
610
402
T_2
612
T_1
206
606
616
θ_I
604
606
300
300
208

FIG. 6D

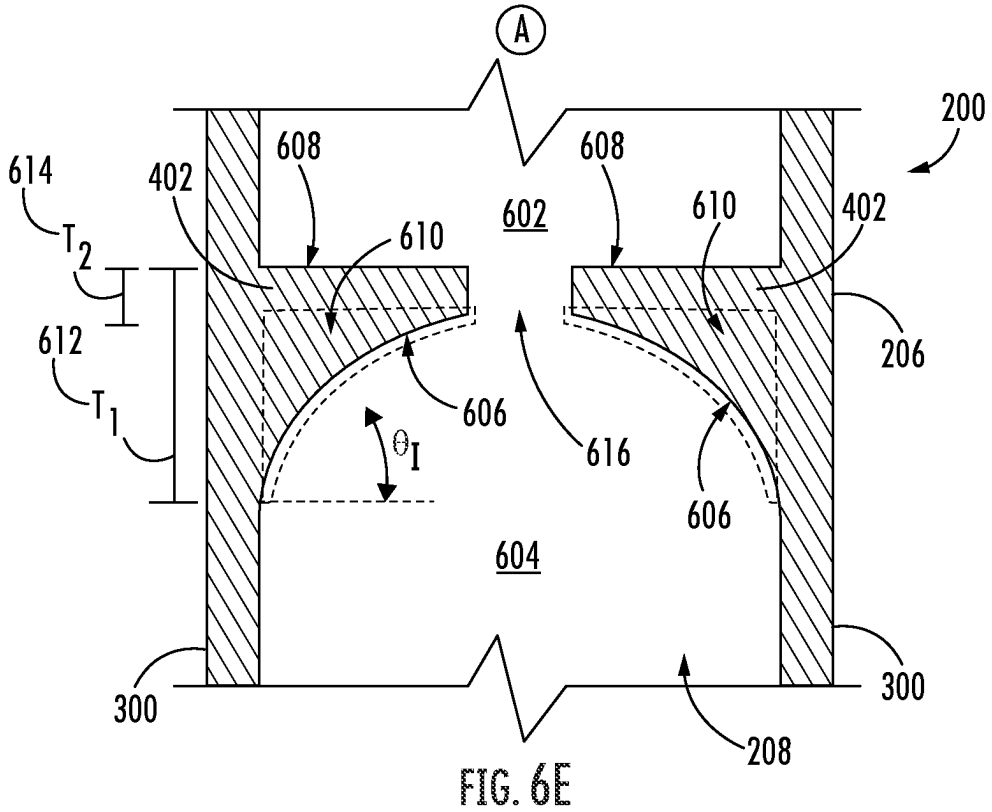
A
200
614
402
608
610
602
608
610
402
T_2
612
T_1
206
606
616
θ_I
606
604
300
300
208

FIG. 6E

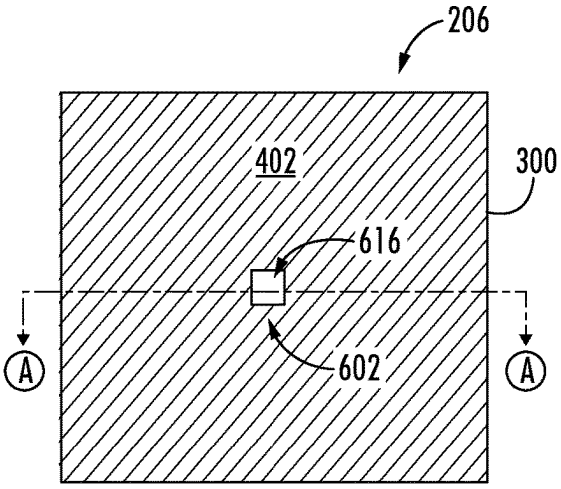

FIG. 7A

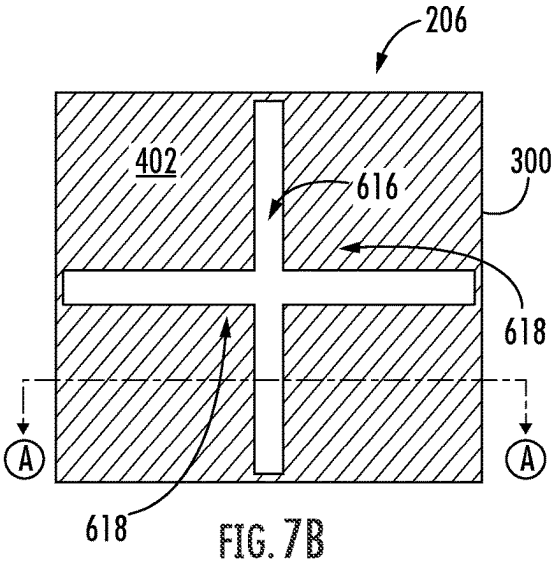

FIG. 7B

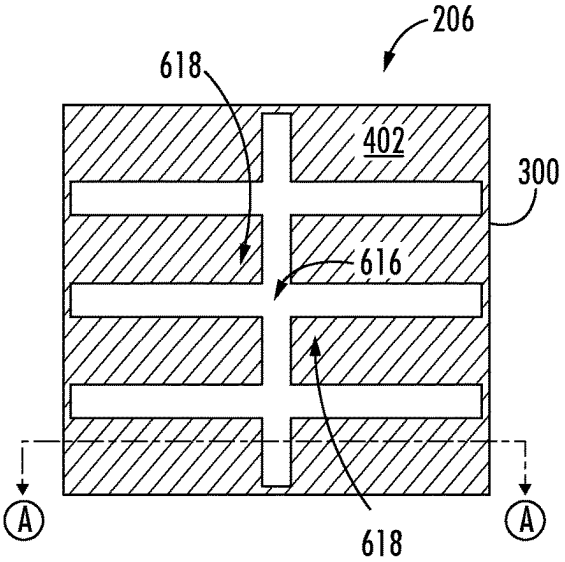

FIG. 7C

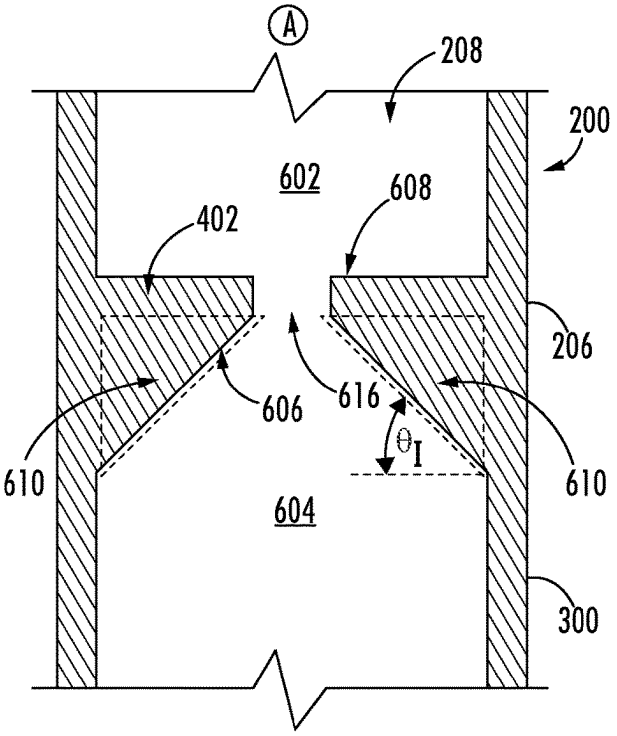

FIG. 7D

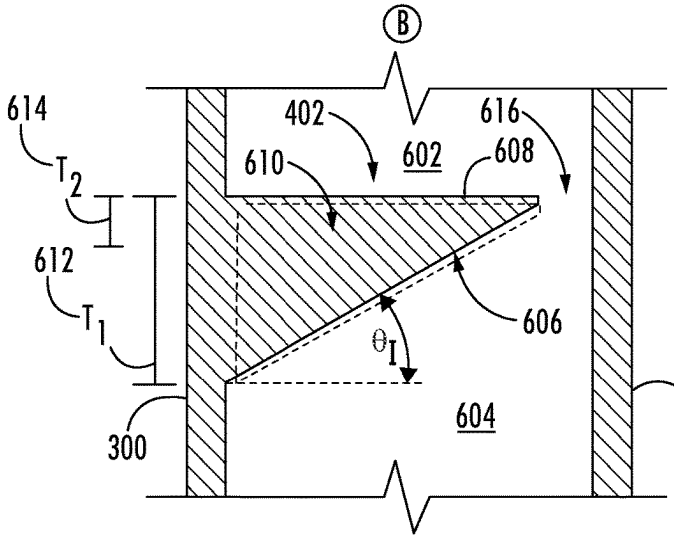

FIG. 8A

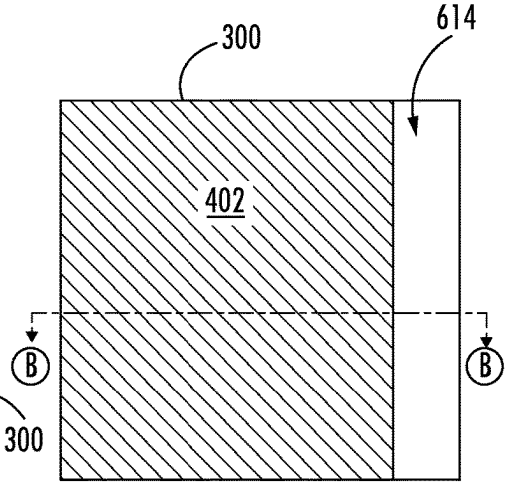

FIG. 8B

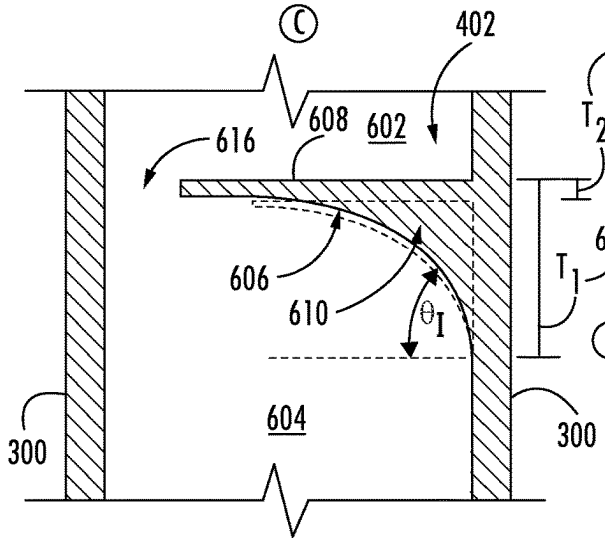

FIG. 8C

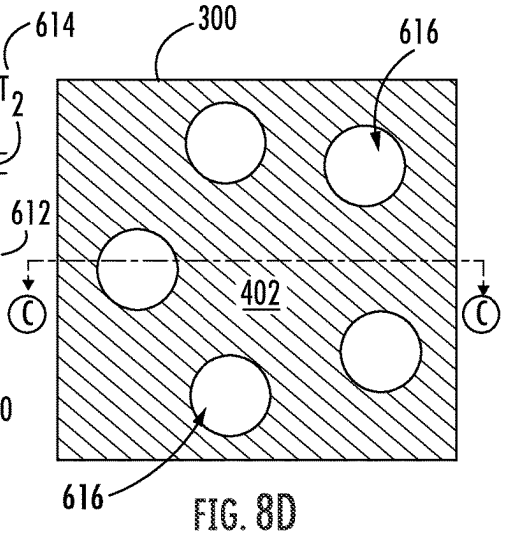

FIG. 8D

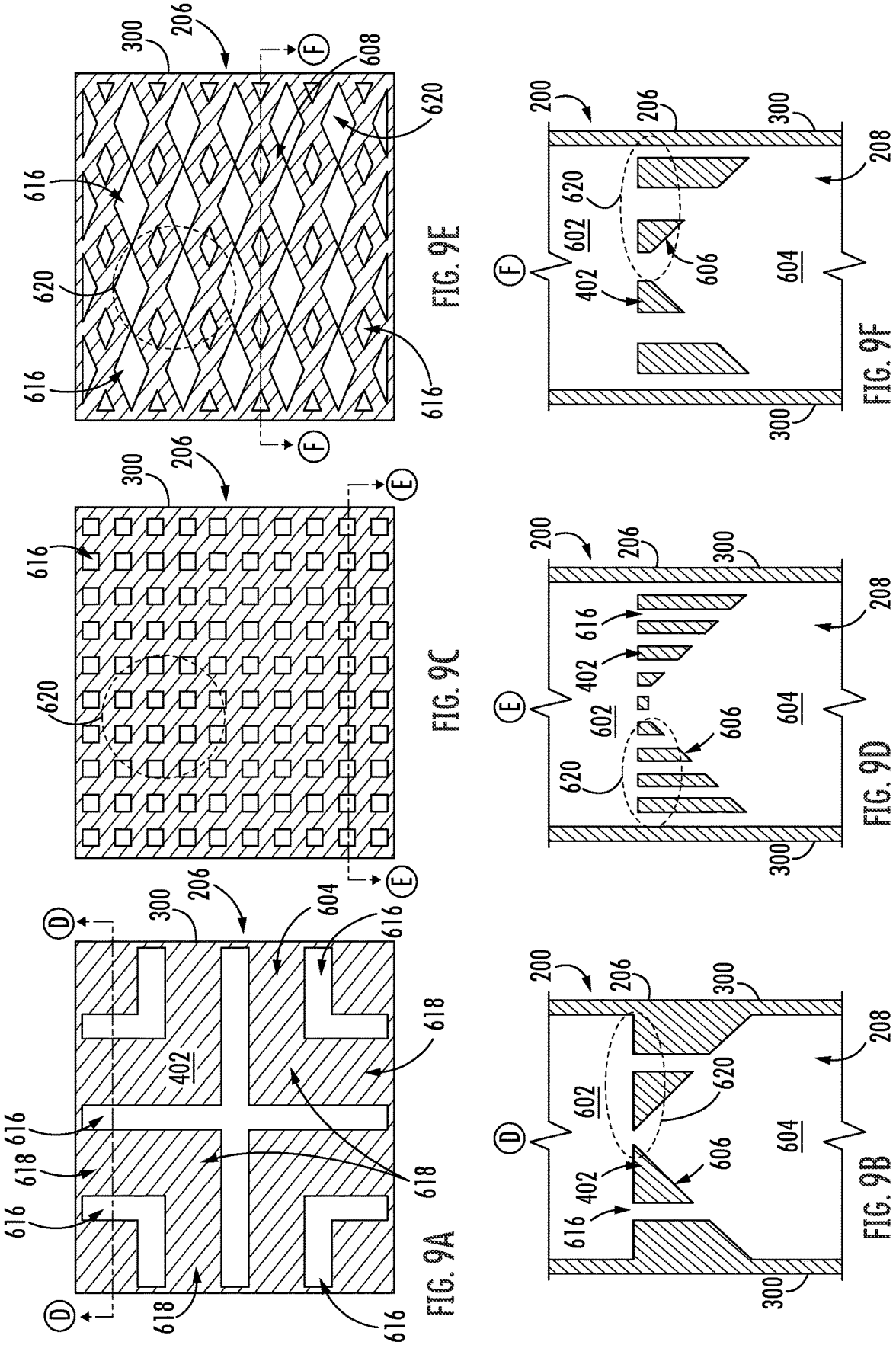

FIG. 9A

FIG. 9B

FIG. 9C

FIG. 9D

FIG. 9E

FIG. 9F

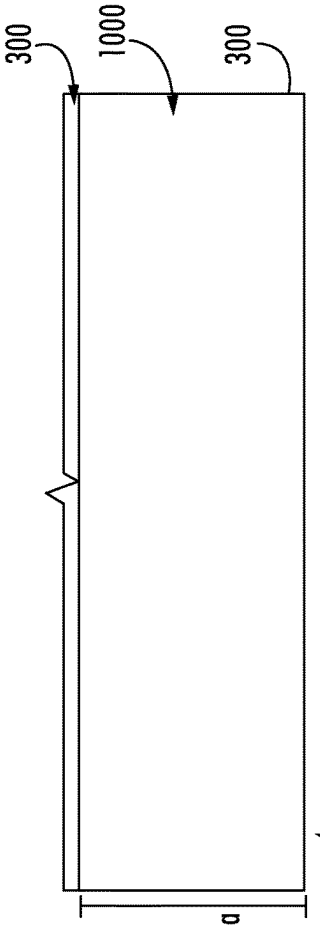

FIG. 10B

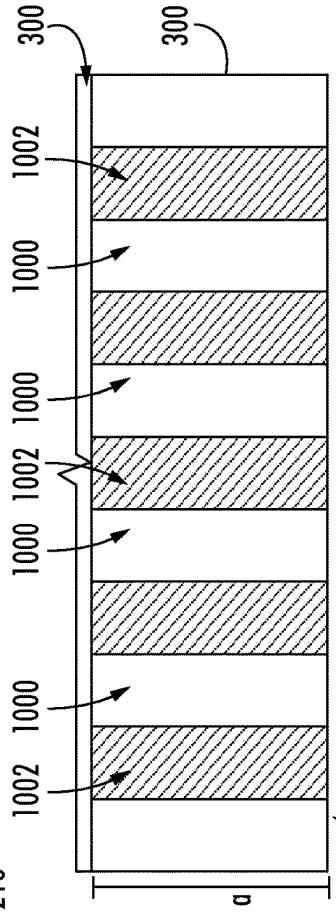

FIG. 10C

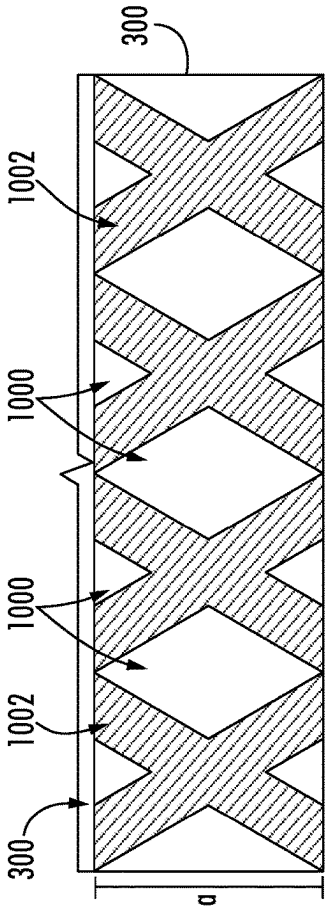

FIG. 10D

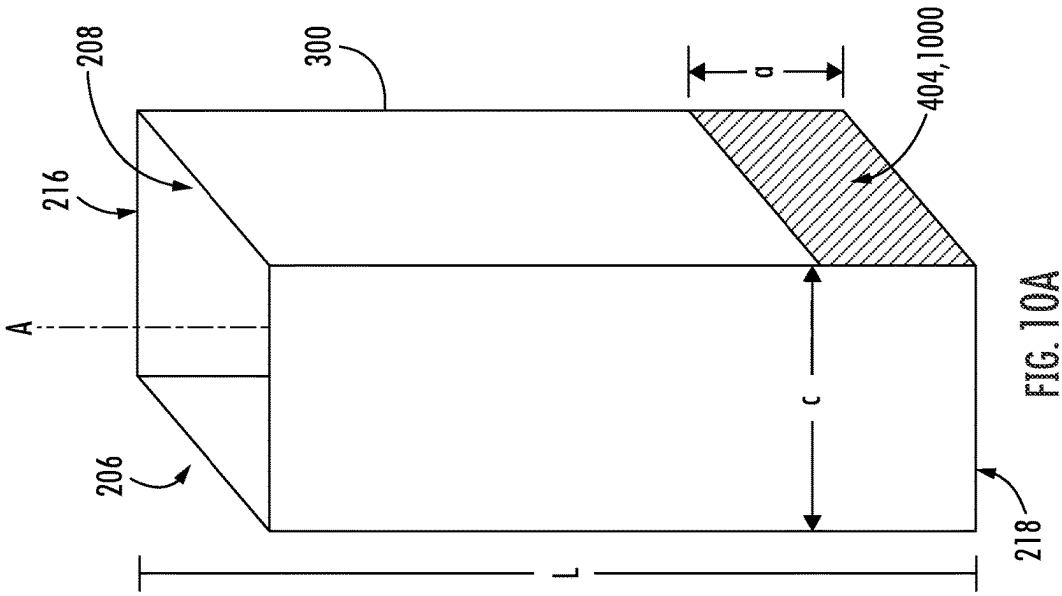

FIG. 10A

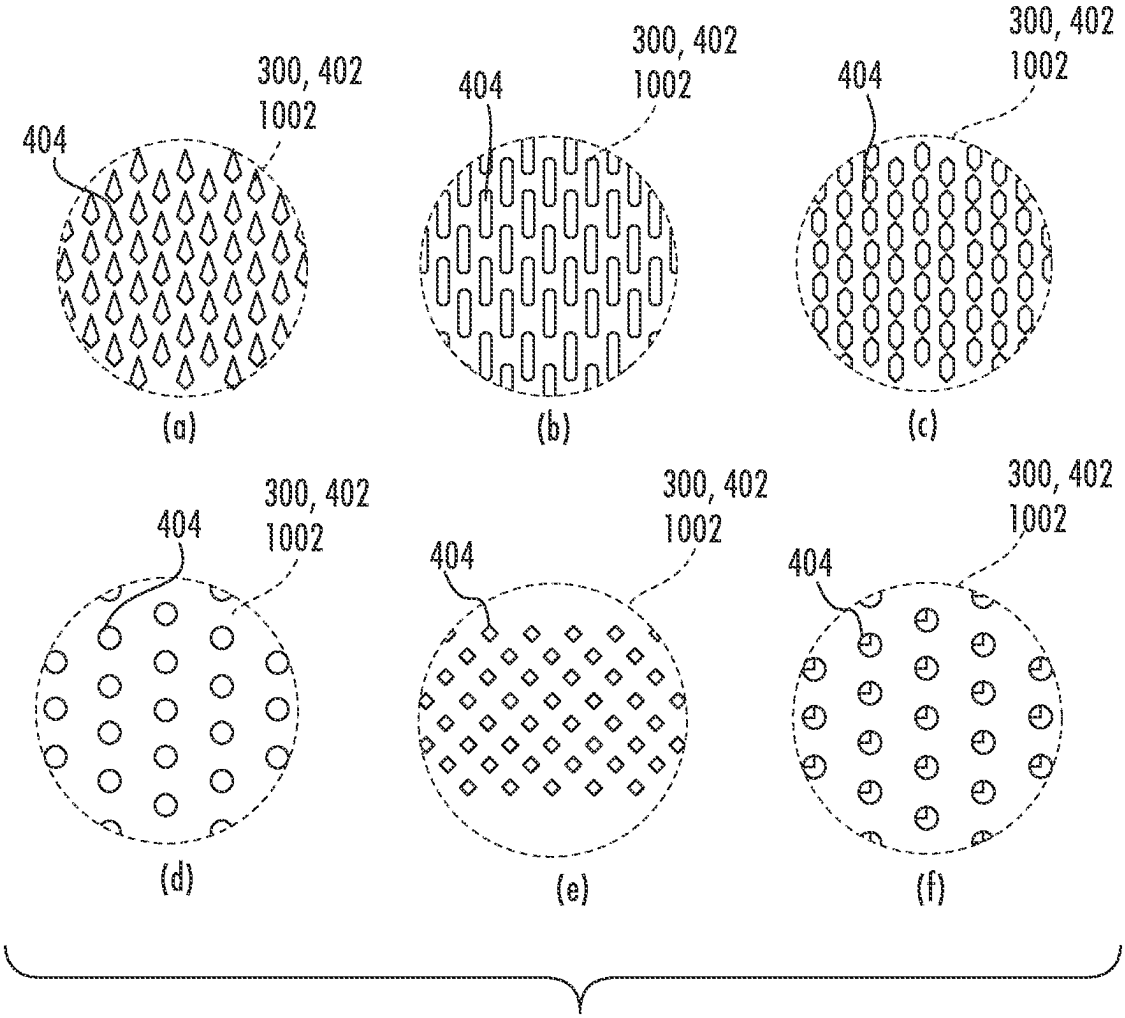
300, 402
1002
404
(a)
300, 402
1002
404
(b)
300, 402
1002
404
(c)
300, 402
1002
404
(d)
300, 402
1002
404
(e)
300, 402
1002
404
(f)

FIG. 11

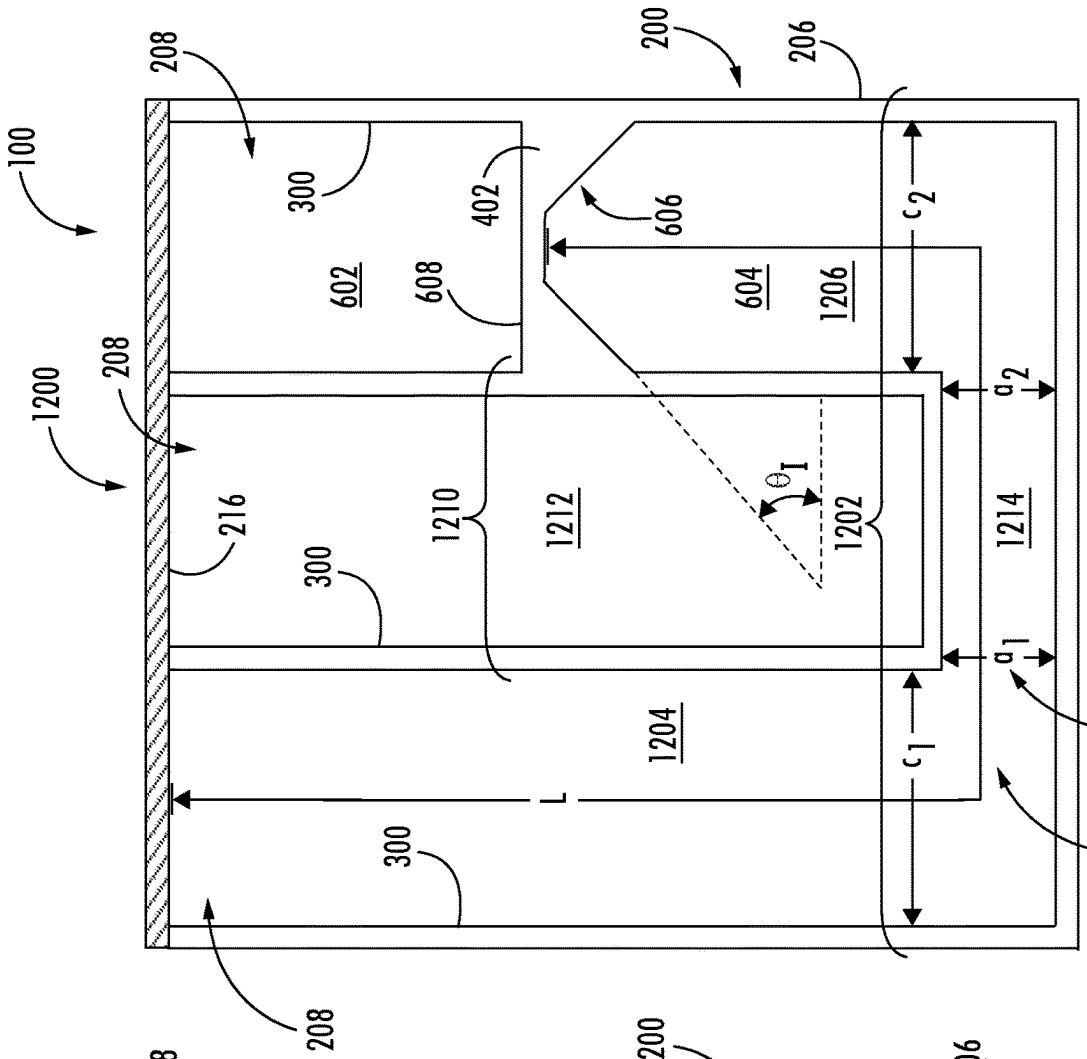

FIG. 12B

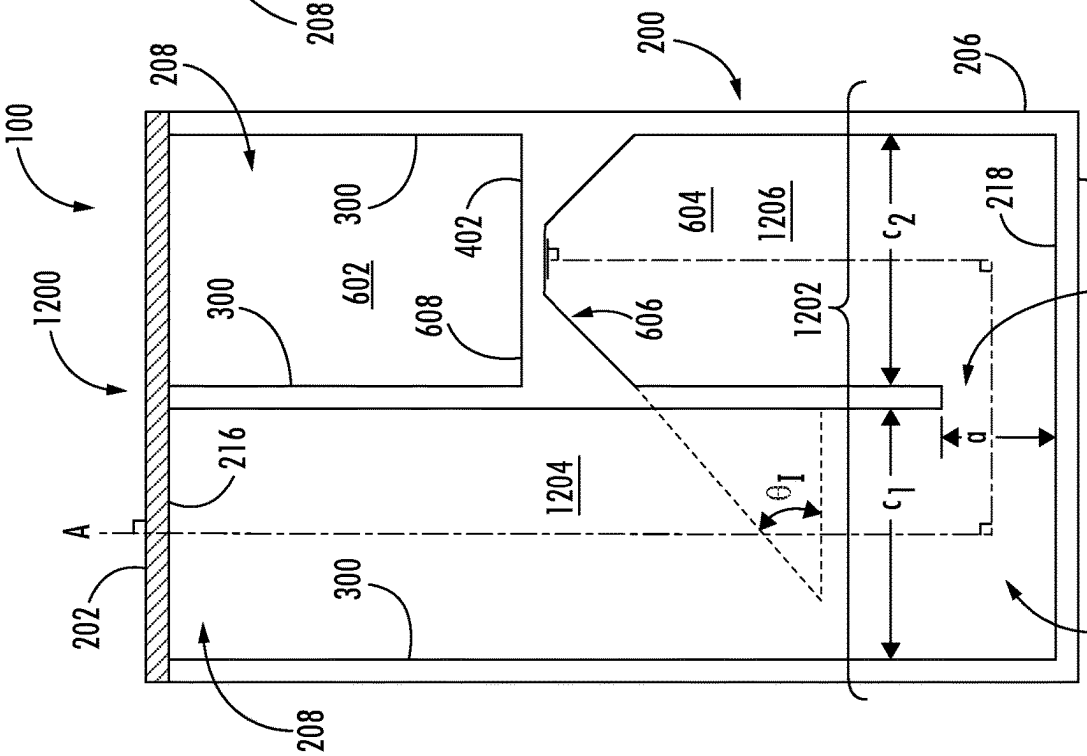

FIG. 12A

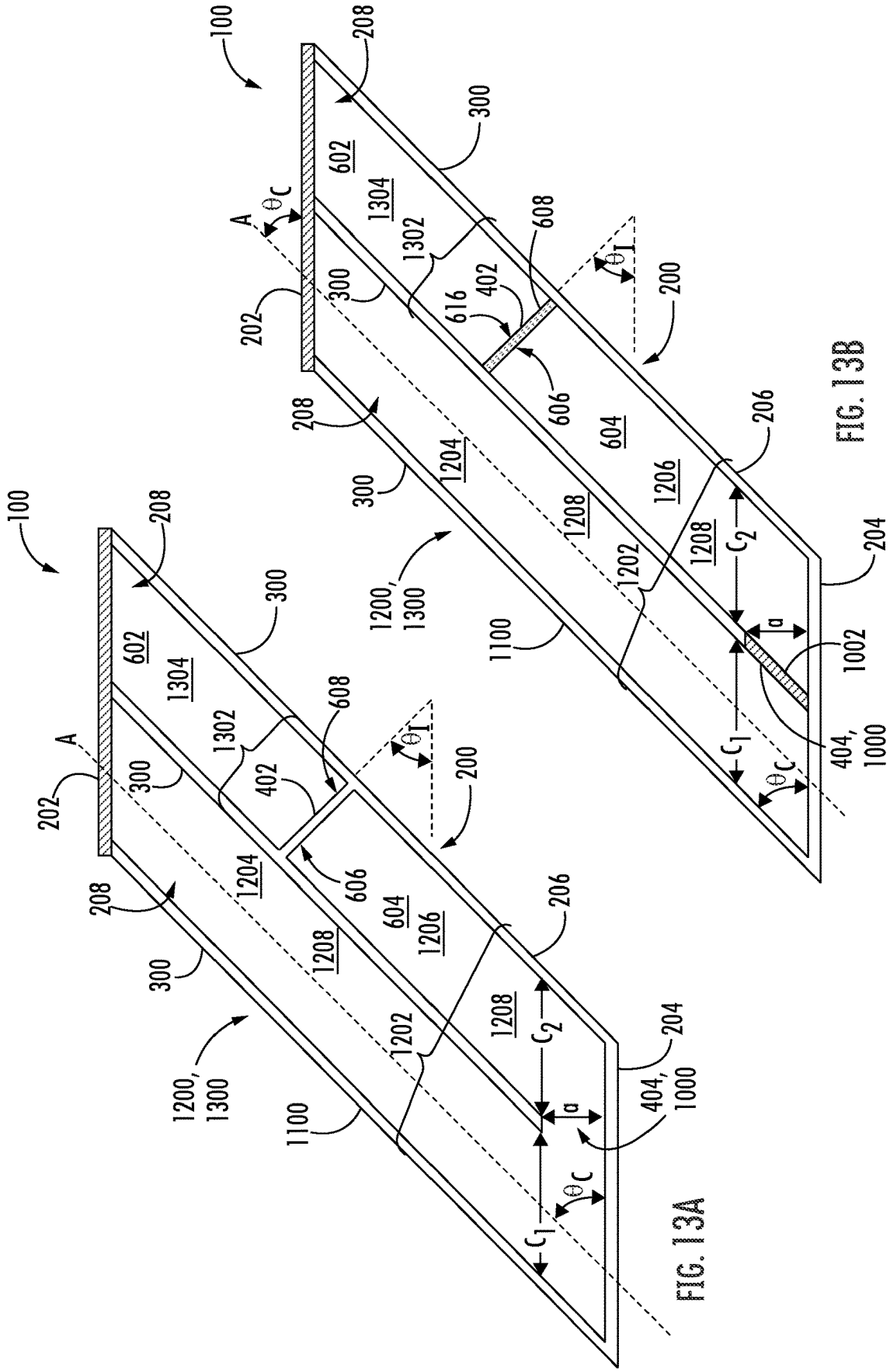

FIG. 13B

FIG. 13A

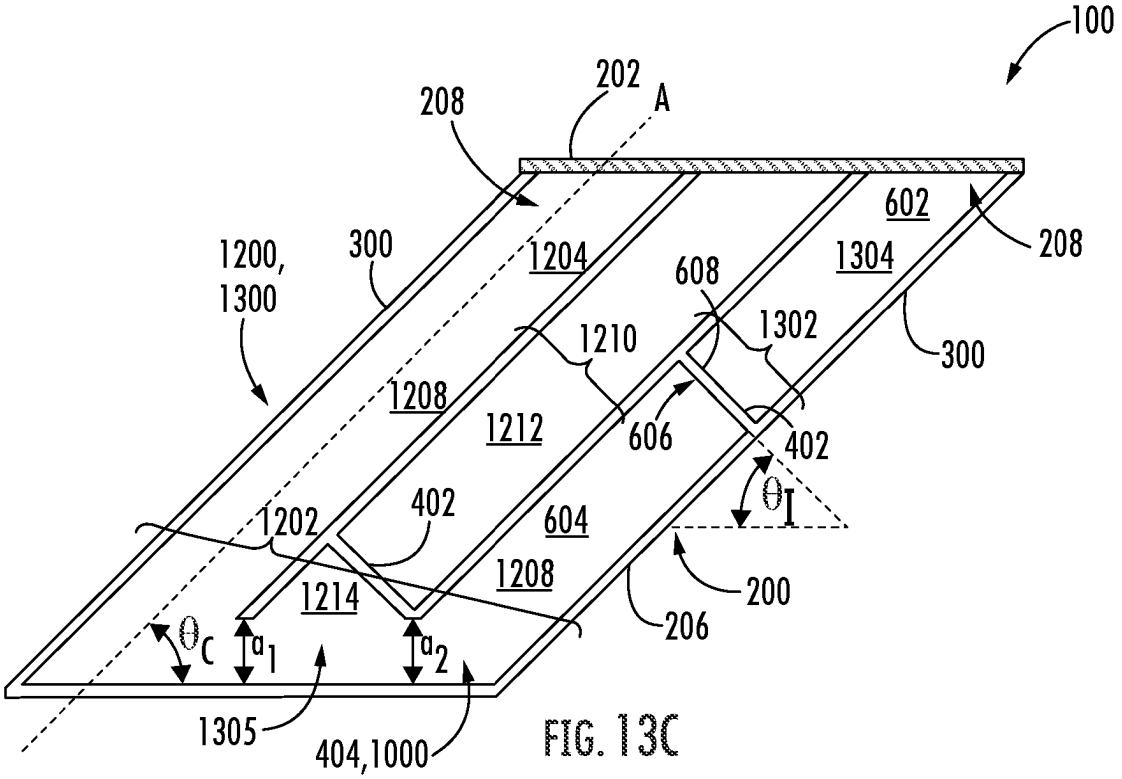

FIG. 13C

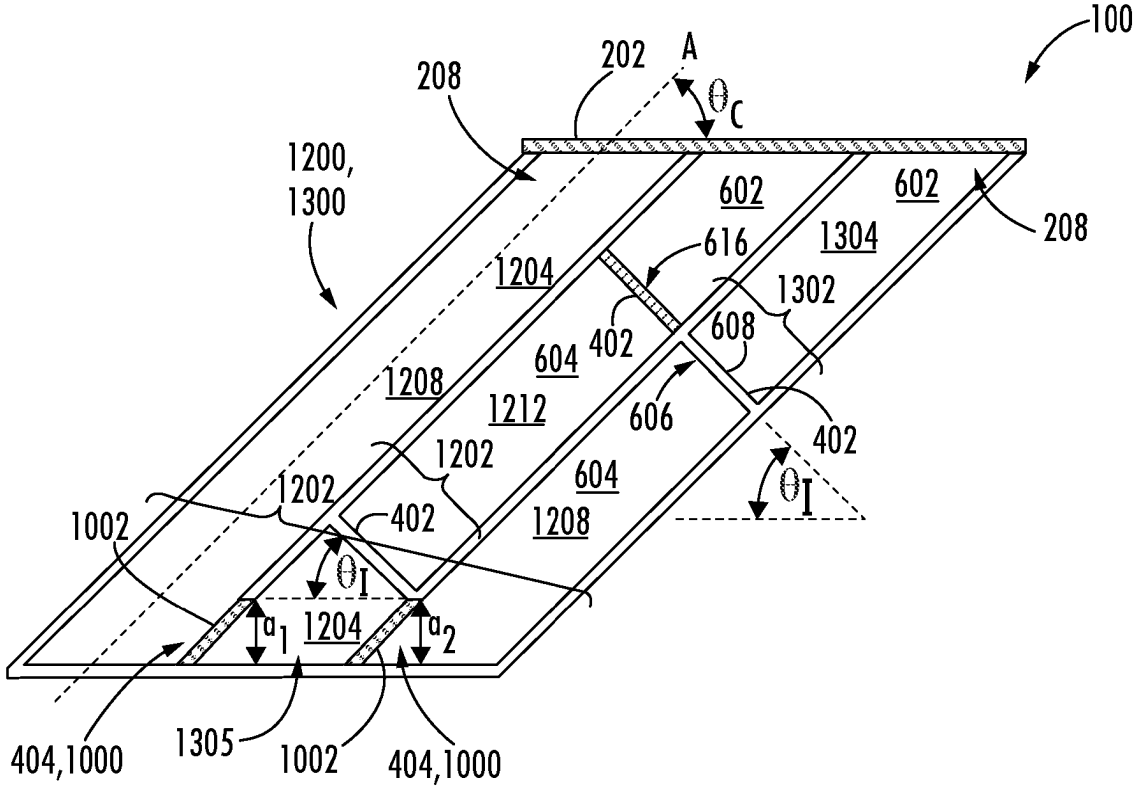

FIG. 13D

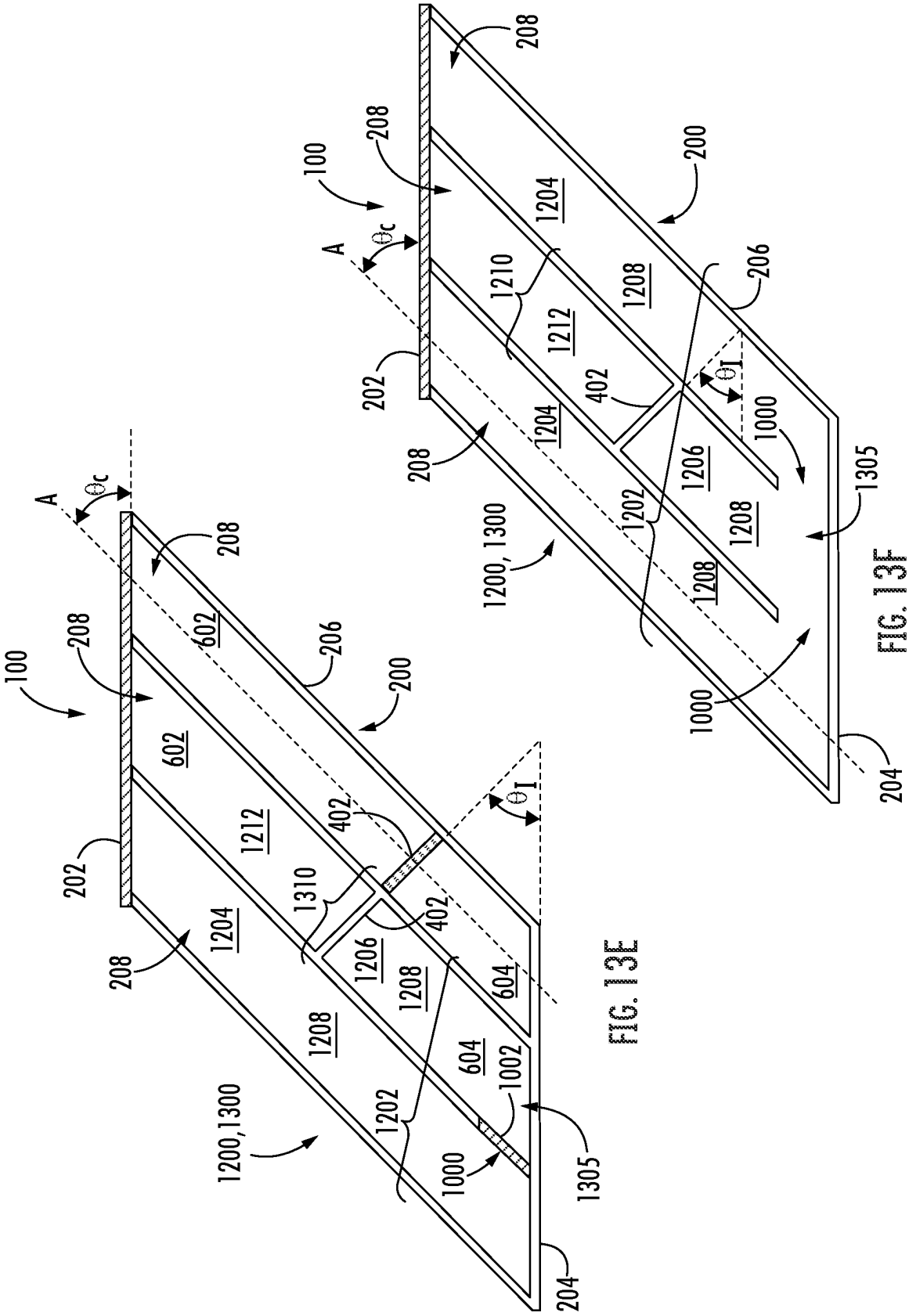

FIG. 13E

FIG. 13F

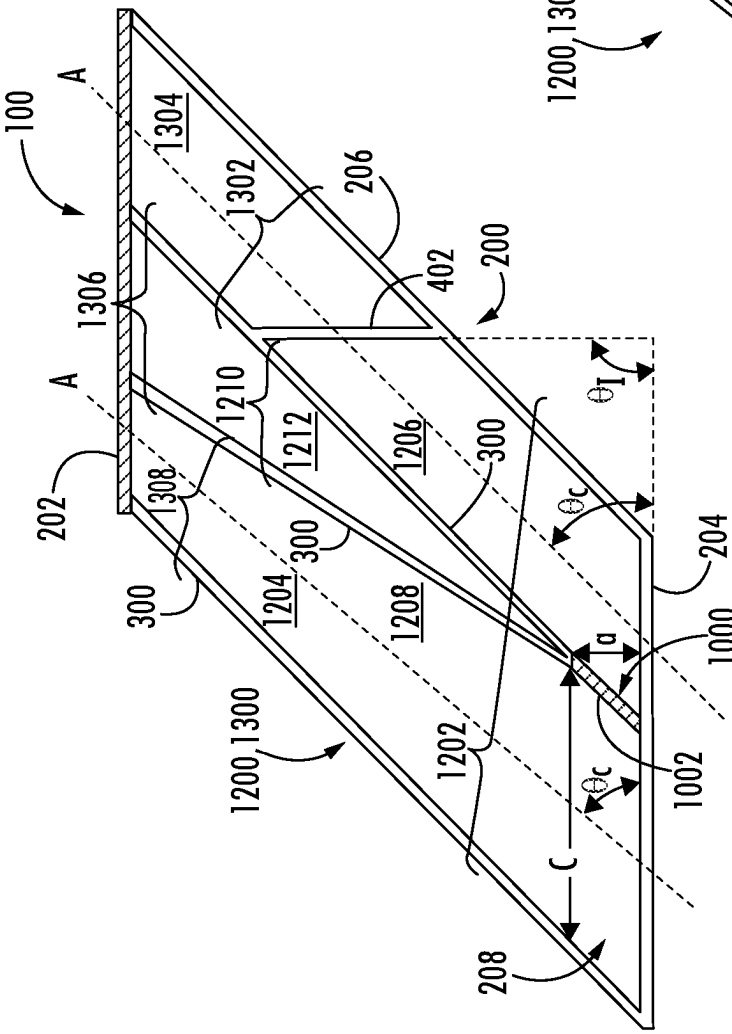

FIG. 13G

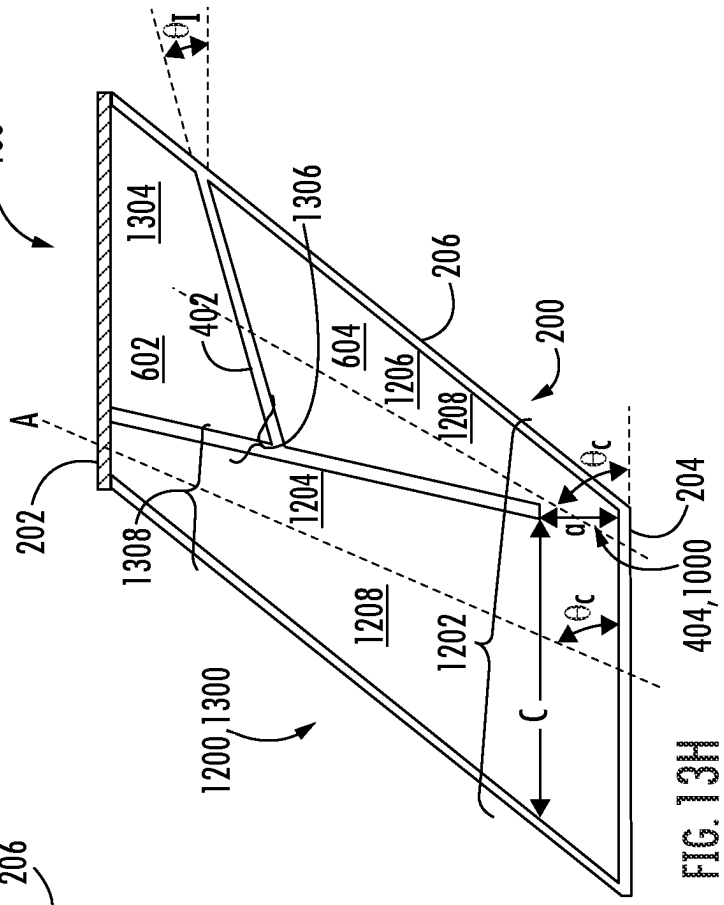

FIG. 13H

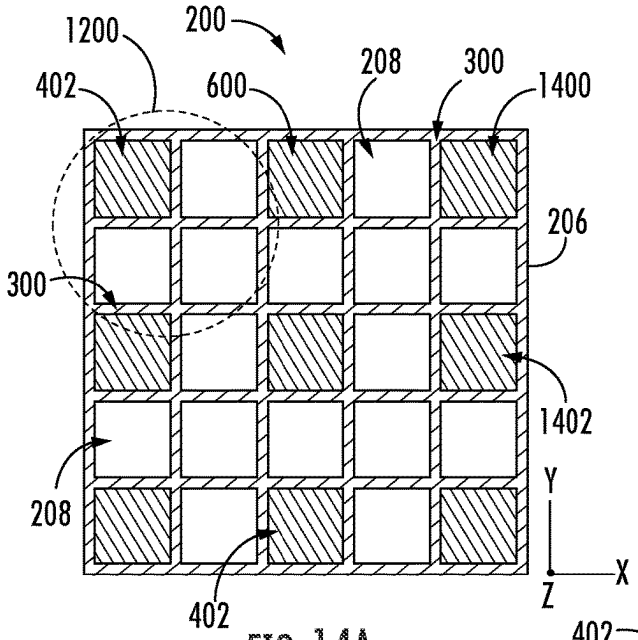

FIG. 14A

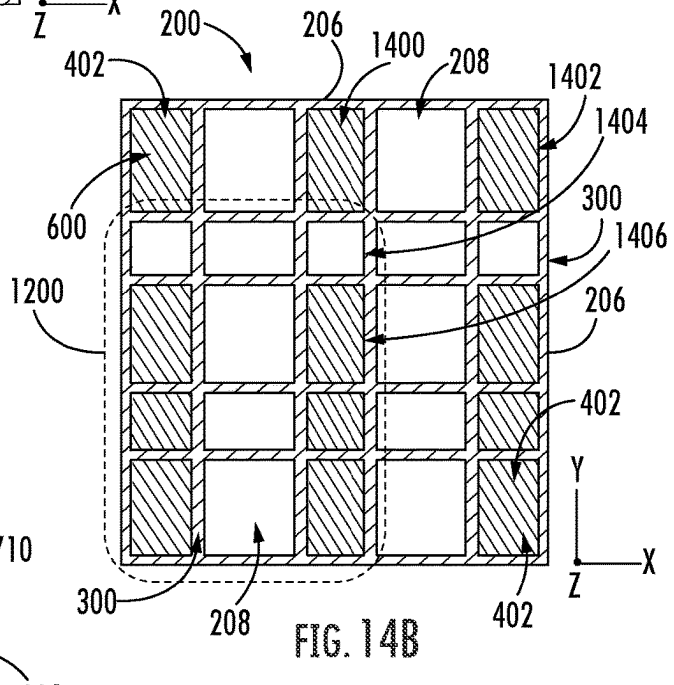

FIG. 14B

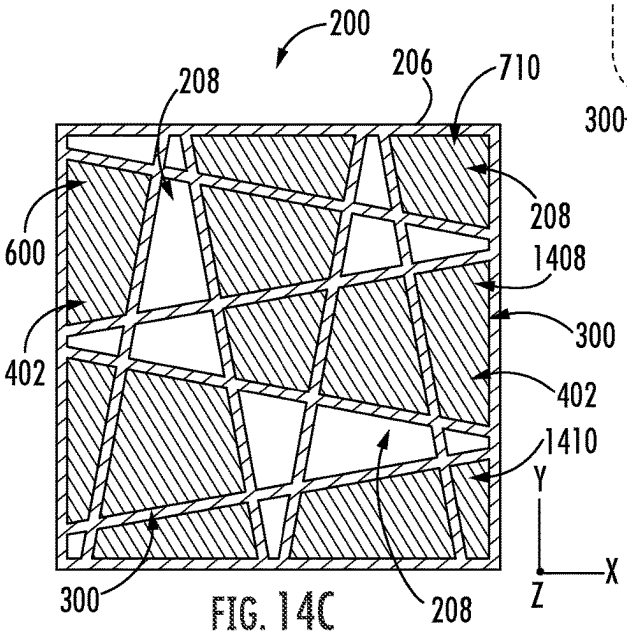

FIG. 14C

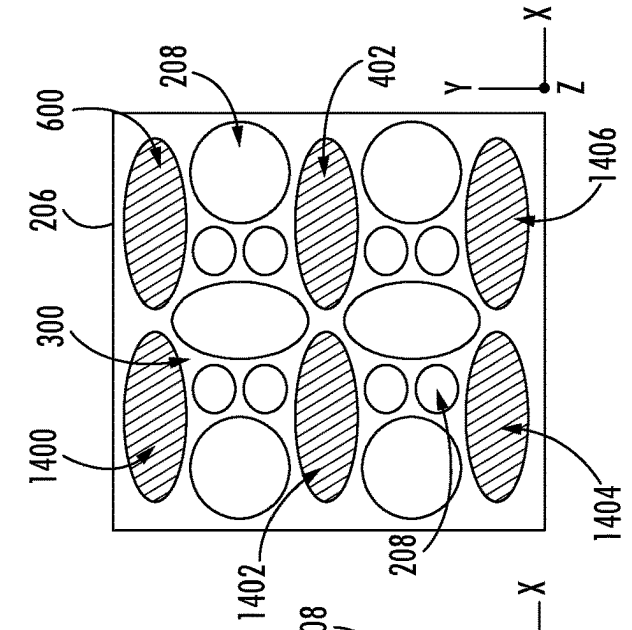

FIG. 14F

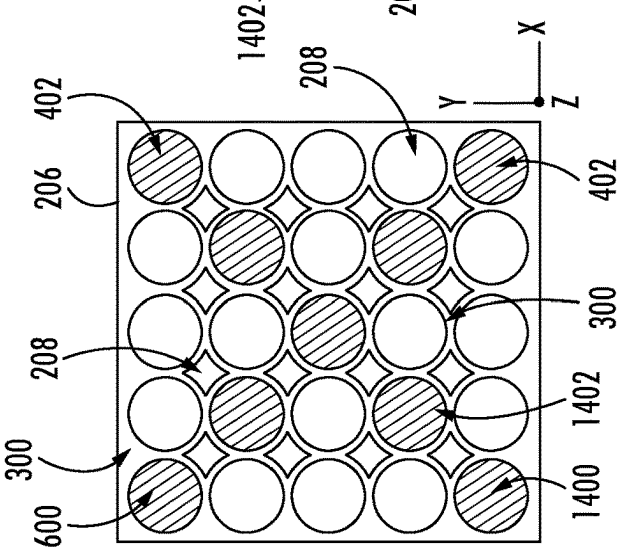

FIG. 14E

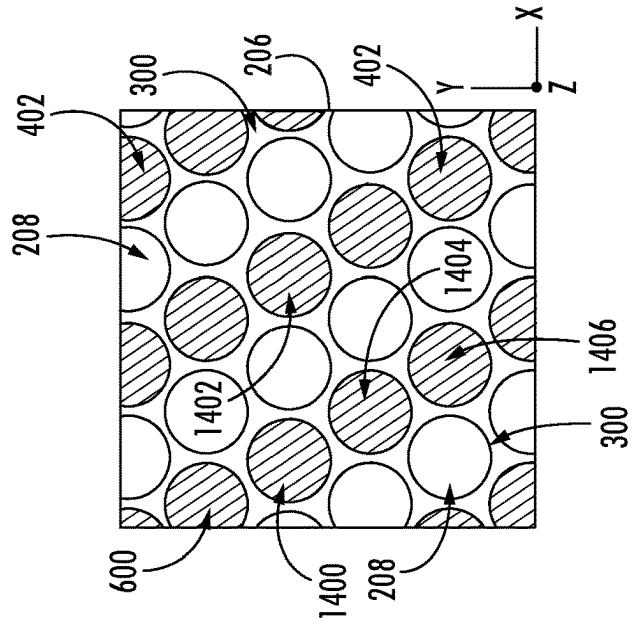

FIG. 14D

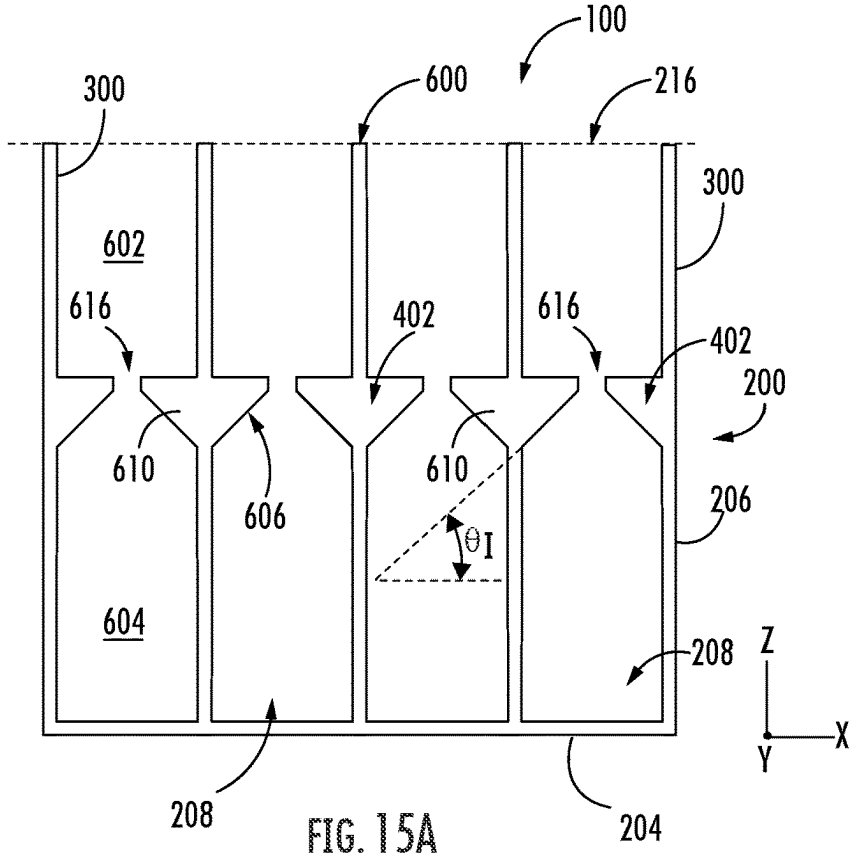

FIG. 15A

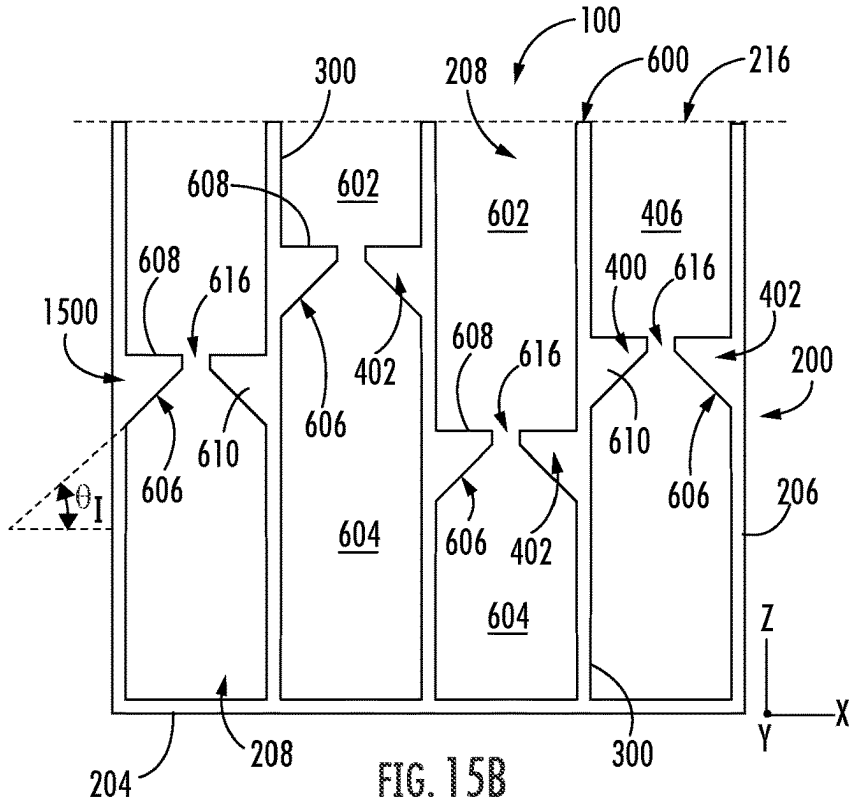

FIG. 15B

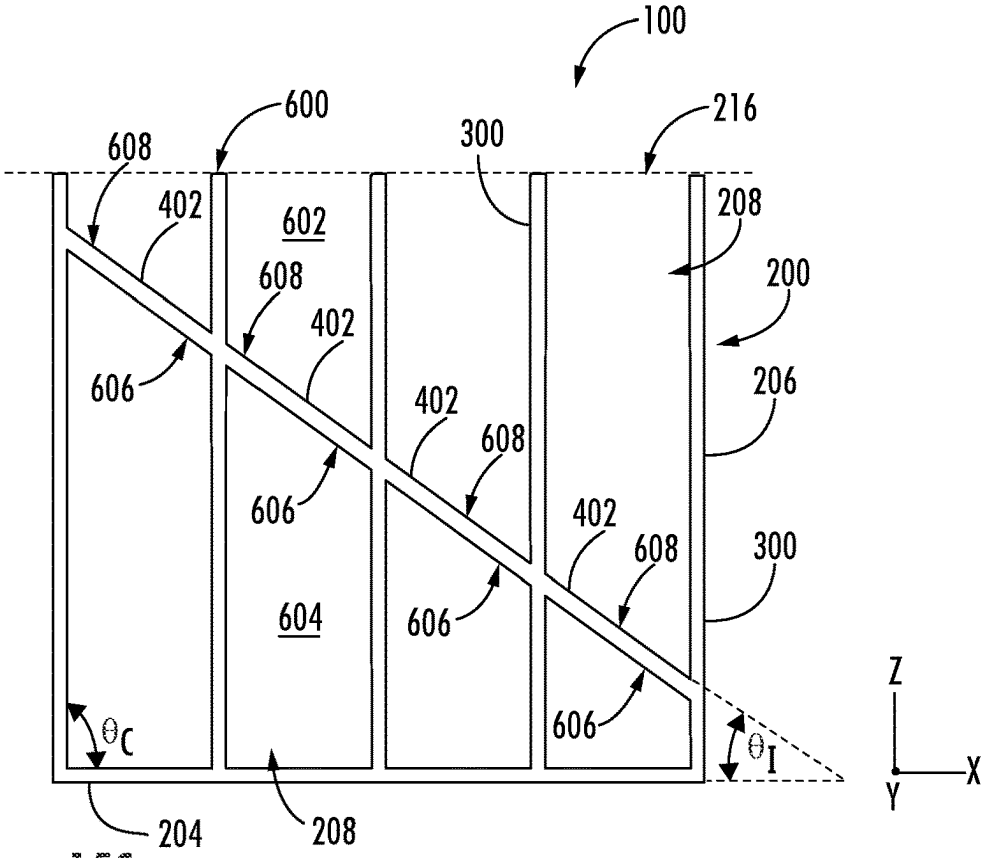

FIG. 15C

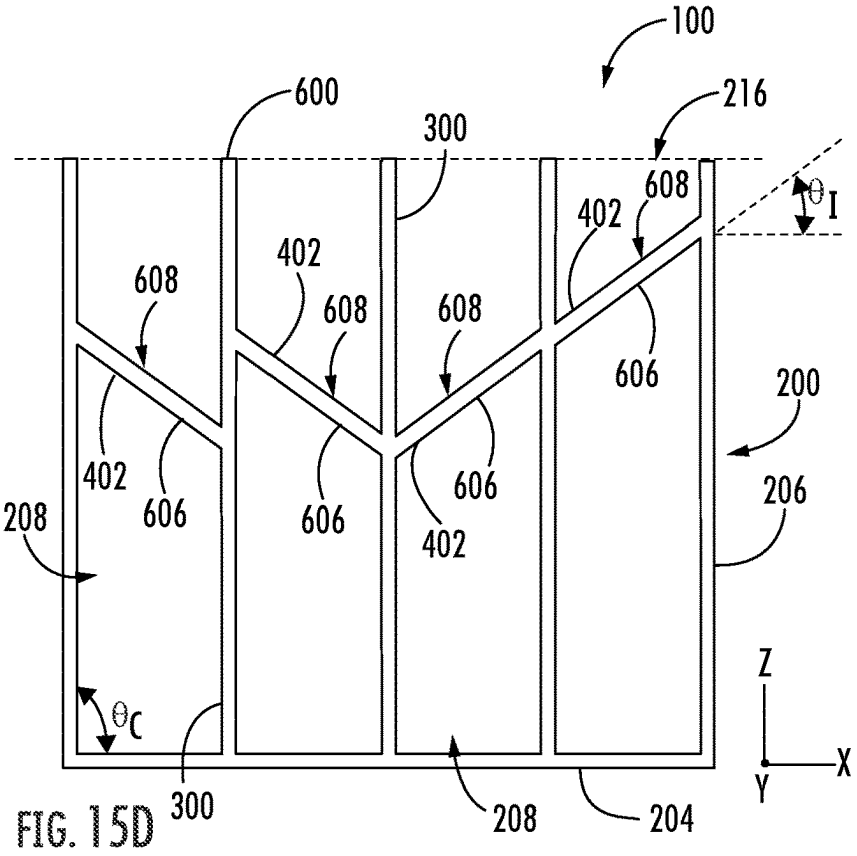

FIG. 15D

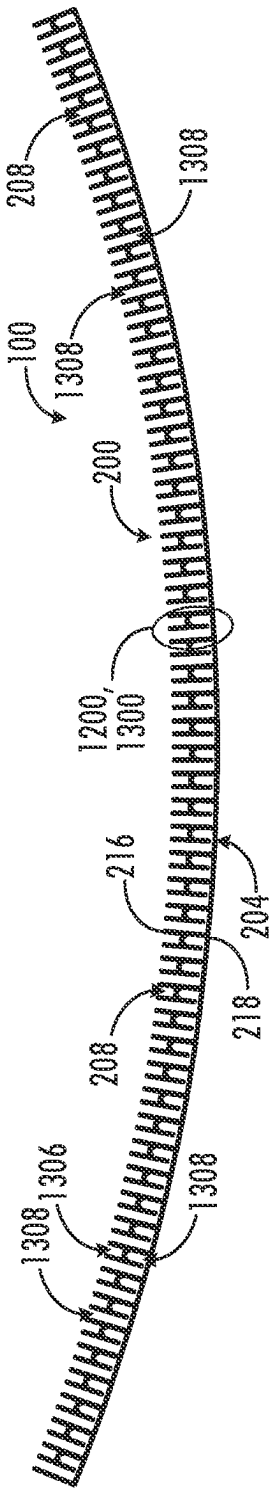

FIG. 16A

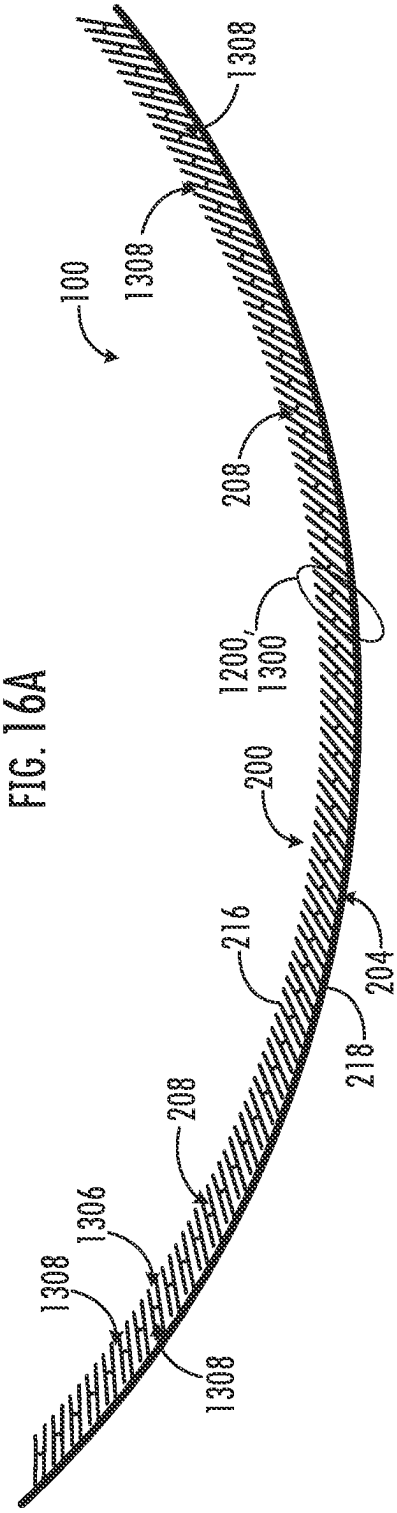

FIG. 16B

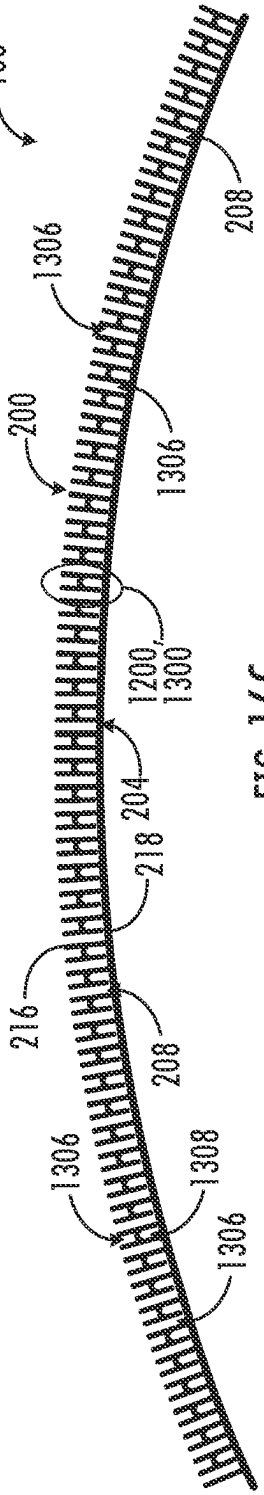

FIG. 16C

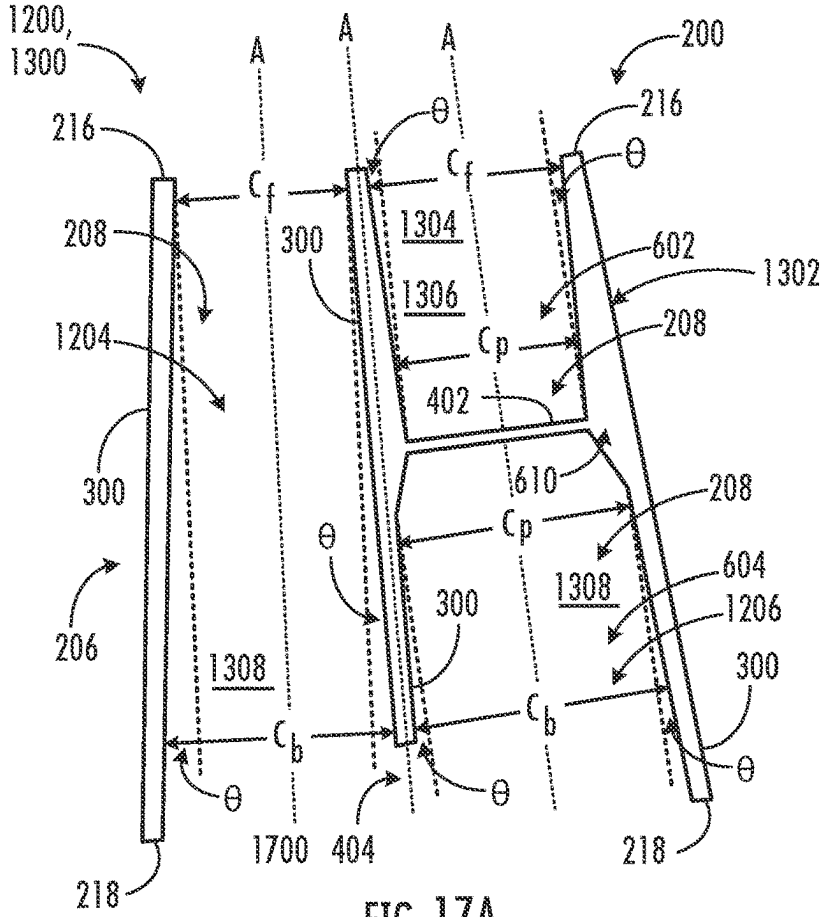

FIG. 17A

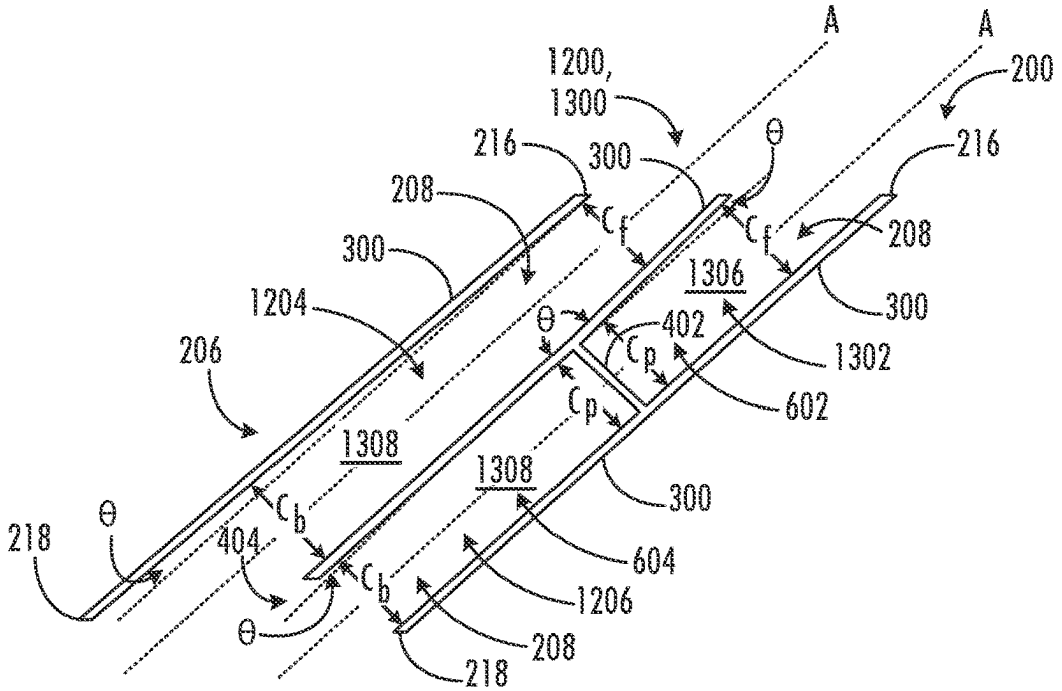

FIG. 17B

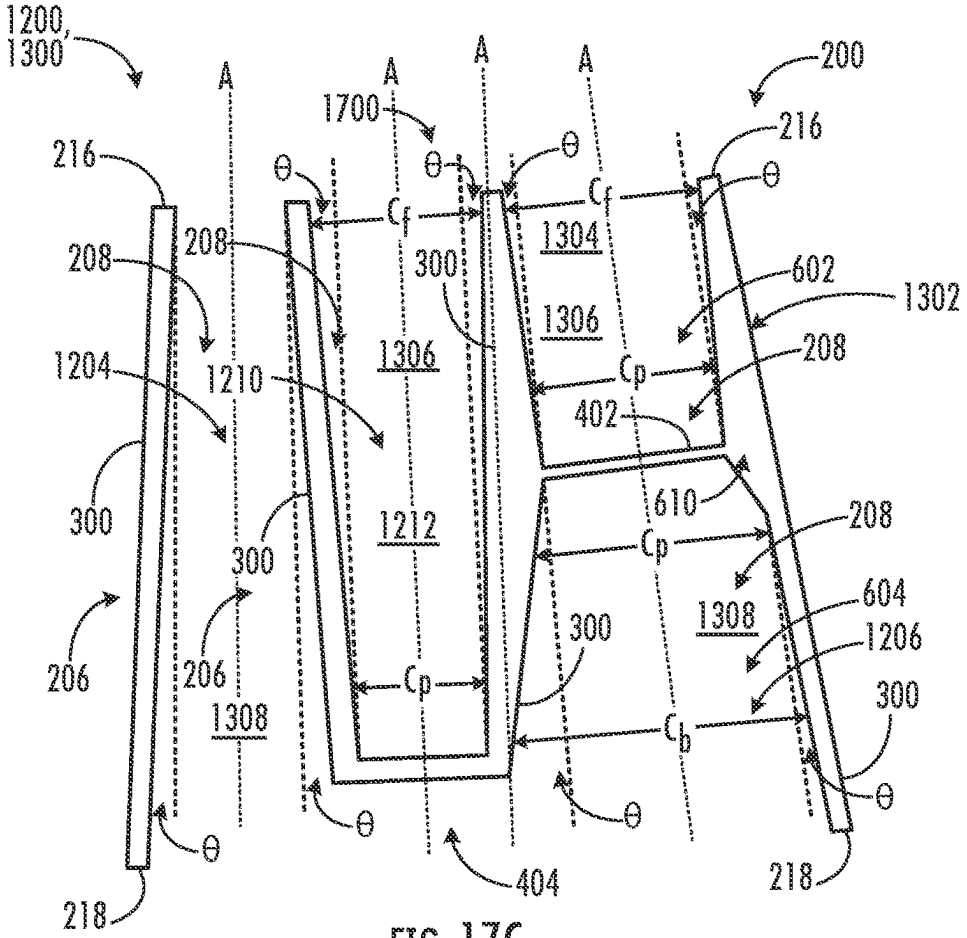

FIG. 17C

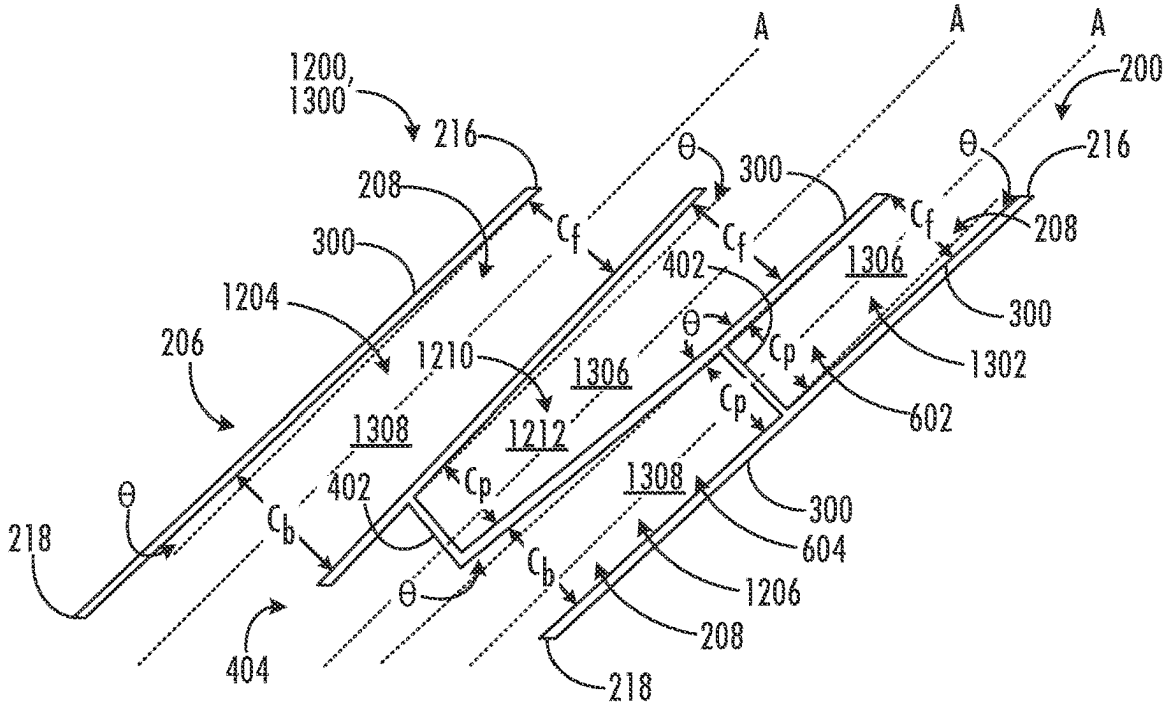

FIG. 17D

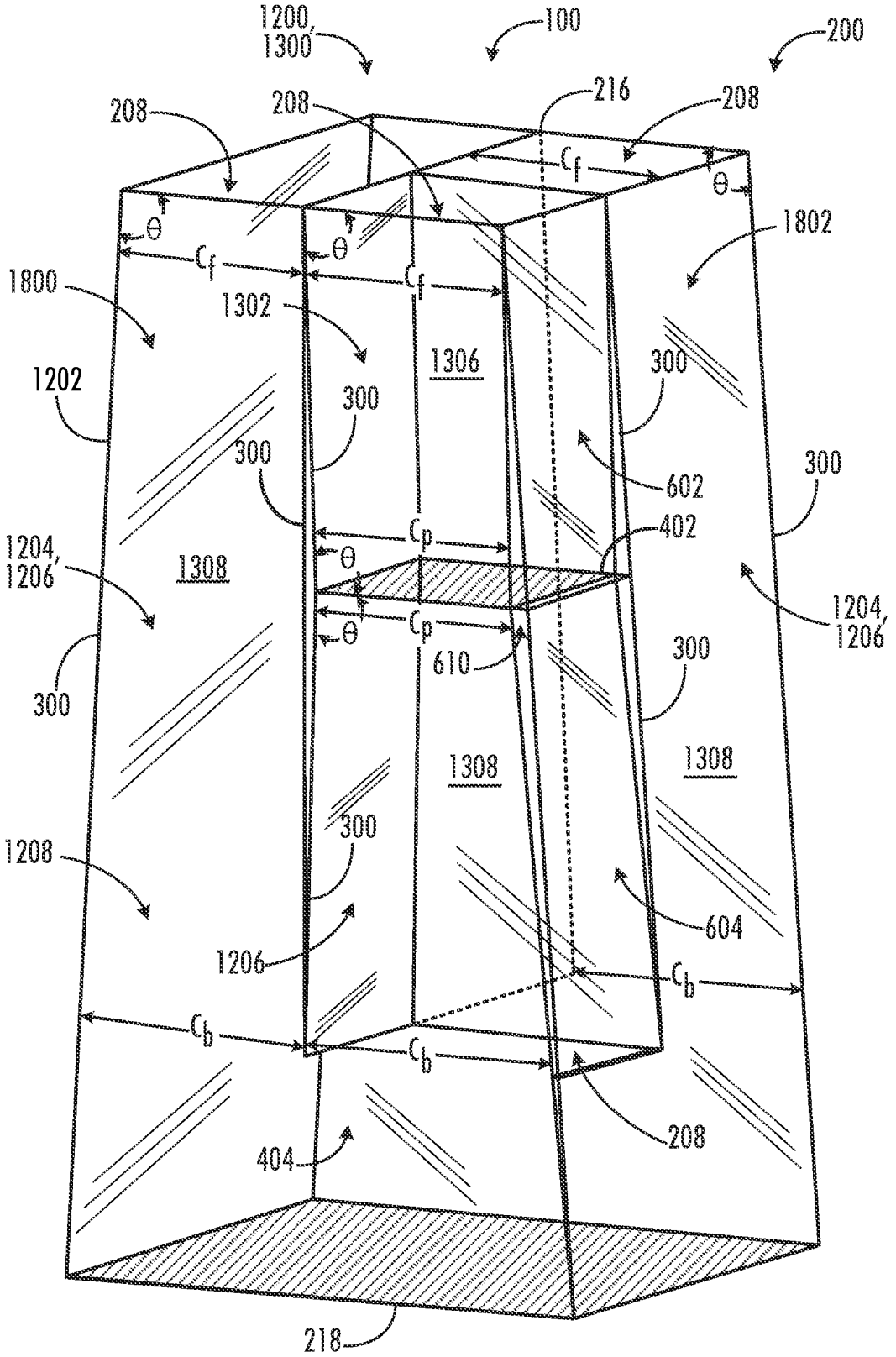
1200,
1300
100
200
208
208
216
208
C_f
θ
θ
θ
1802
C_f
C_f
1800
1302
1306
300
1202
300
300
602
300
C_p
402
1204,
1206
1308
θ
1204,
1206
θ
C_p
610
300
300
1308
1308
300
1208
604
1206
C_b
C_b
C_b
208
404
218

FIG. 18

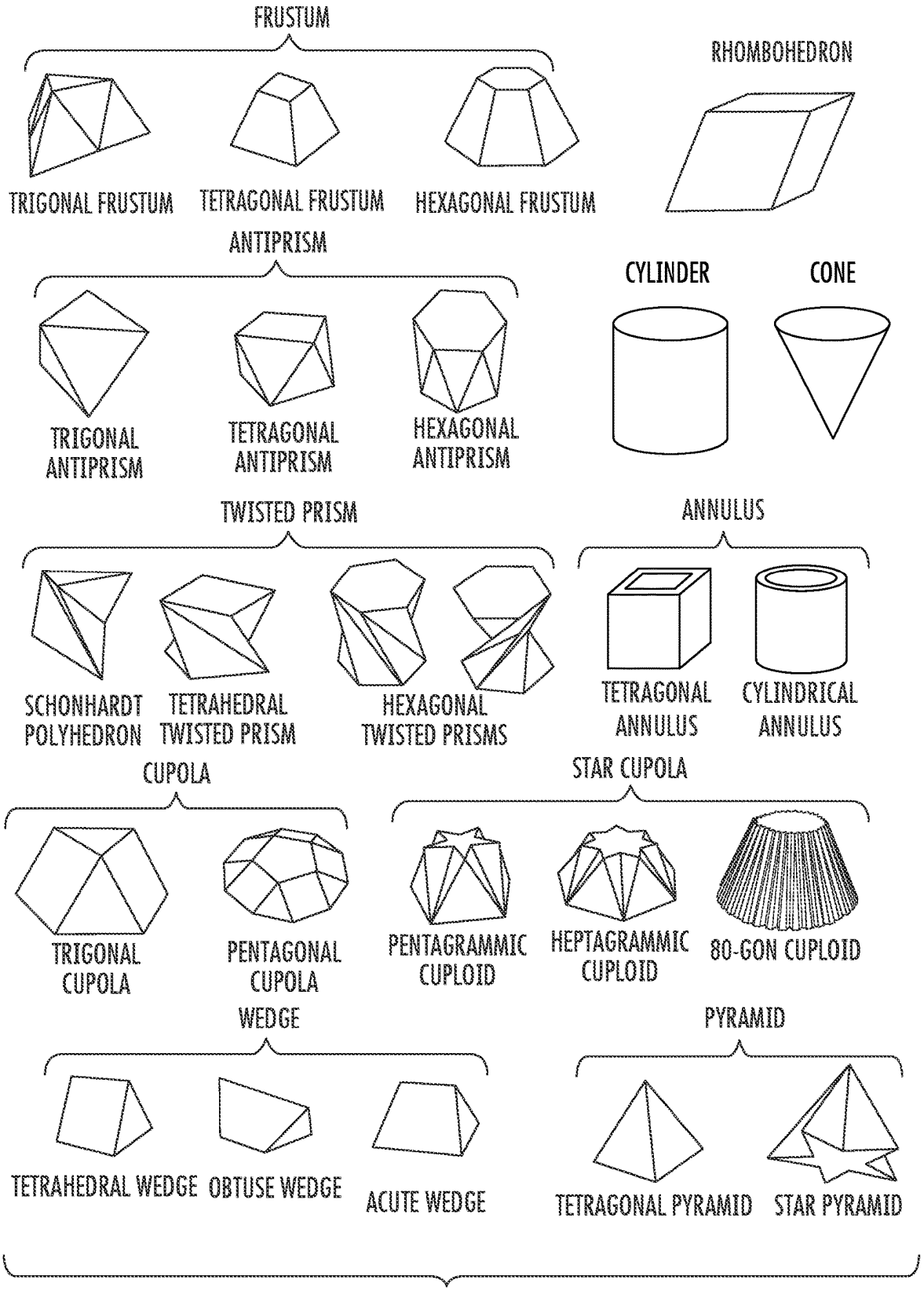
FRUSTUM
TRIGONAL FRUSTUM
TETRAGONAL FRUSTUM
HEXAGONAL FRUSTUM
RHOMBOHEDRON
ANTIPRISM
TRIGONAL ANTIPRISM
TETRAGONAL ANTIPRISM
HEXAGONAL ANTIPRISM
CYLINDER
CONE
TWISTED PRISM
SCHONHARDT POLYHEDRON
TETRAHEDRAL TWISTED PRISM
HEXAGONAL TWISTED PRISMS
ANNULUS
TETRAGONAL ANNULUS
CYLINDRICAL ANNULUS
CUPOLA
TRIGONAL CUPOLA
PENTAGONAL CUPOLA
STAR CUPOLA
PENTAGRAMMIC CUPLOID
HEPTAGRAMMIC CUPLOID
80-GON CUPLOID
WEDGE
TETRAHEDRAL WEDGE
OBTUSE WEDGE
ACUTE WEDGE
PYRAMID
TETRAGONAL PYRAMID
STAR PYRAMID

FIG. 19

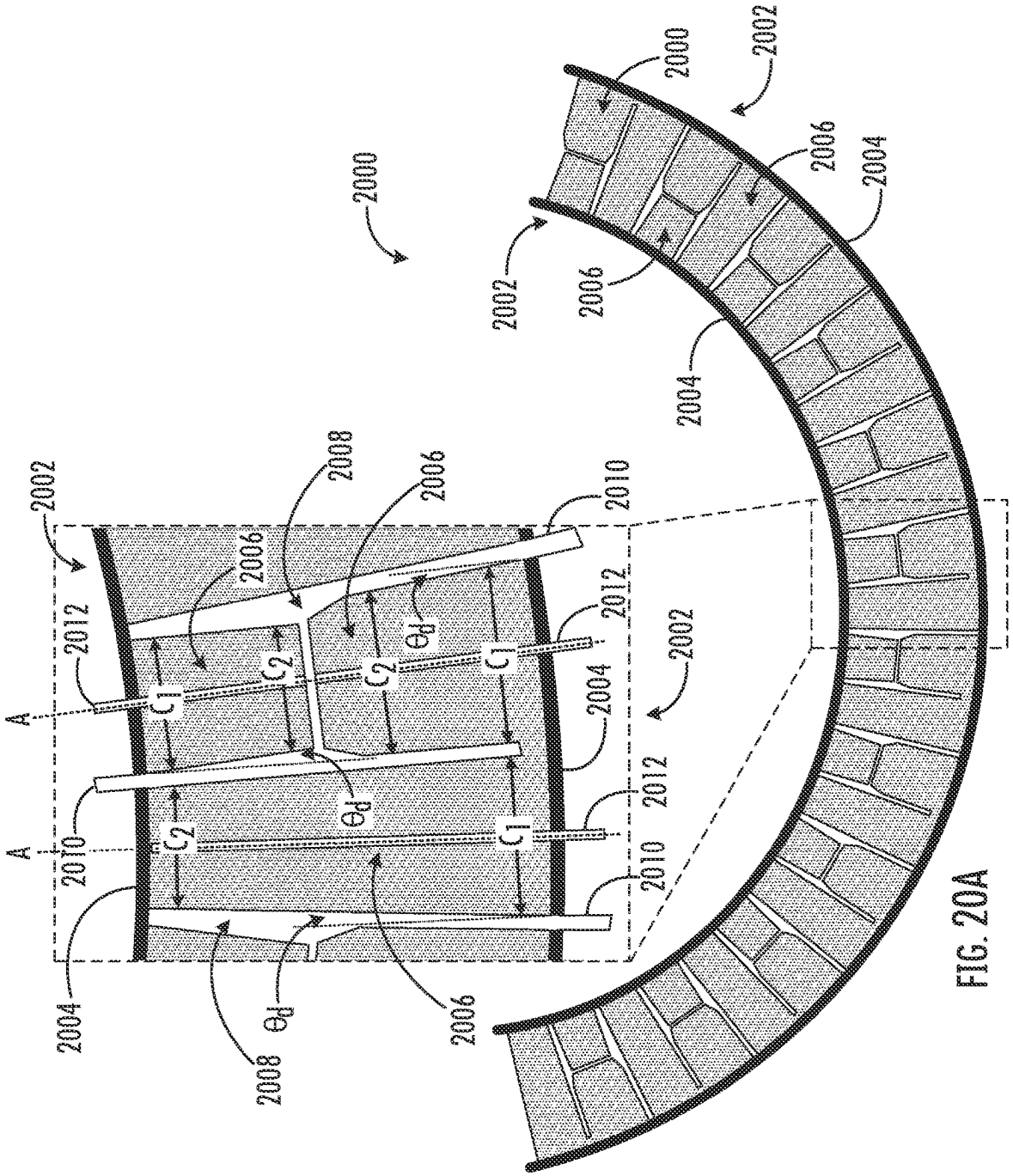

FIG. 20A

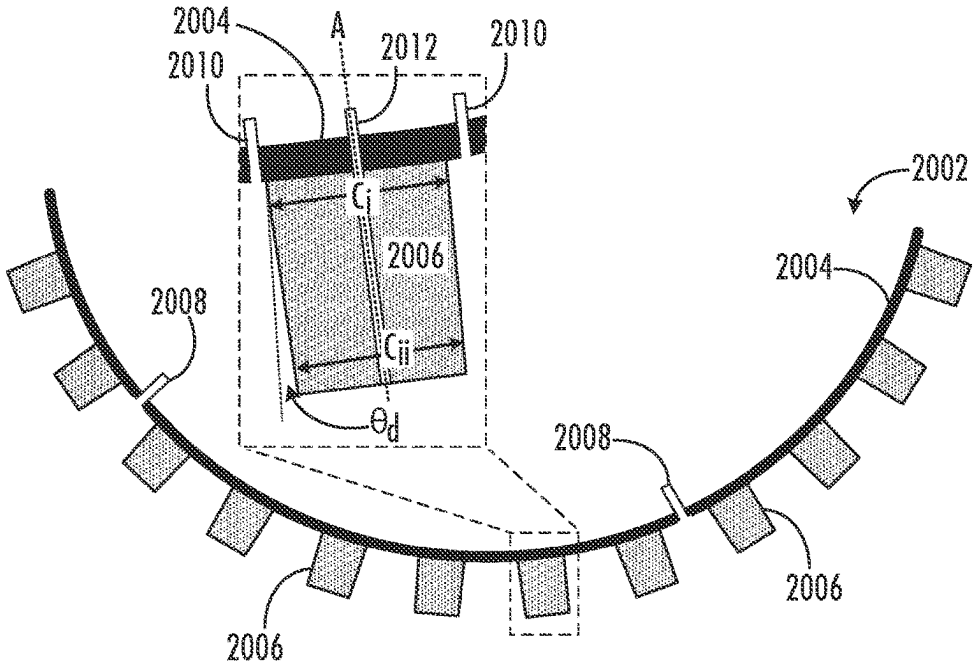

FIG. 20B

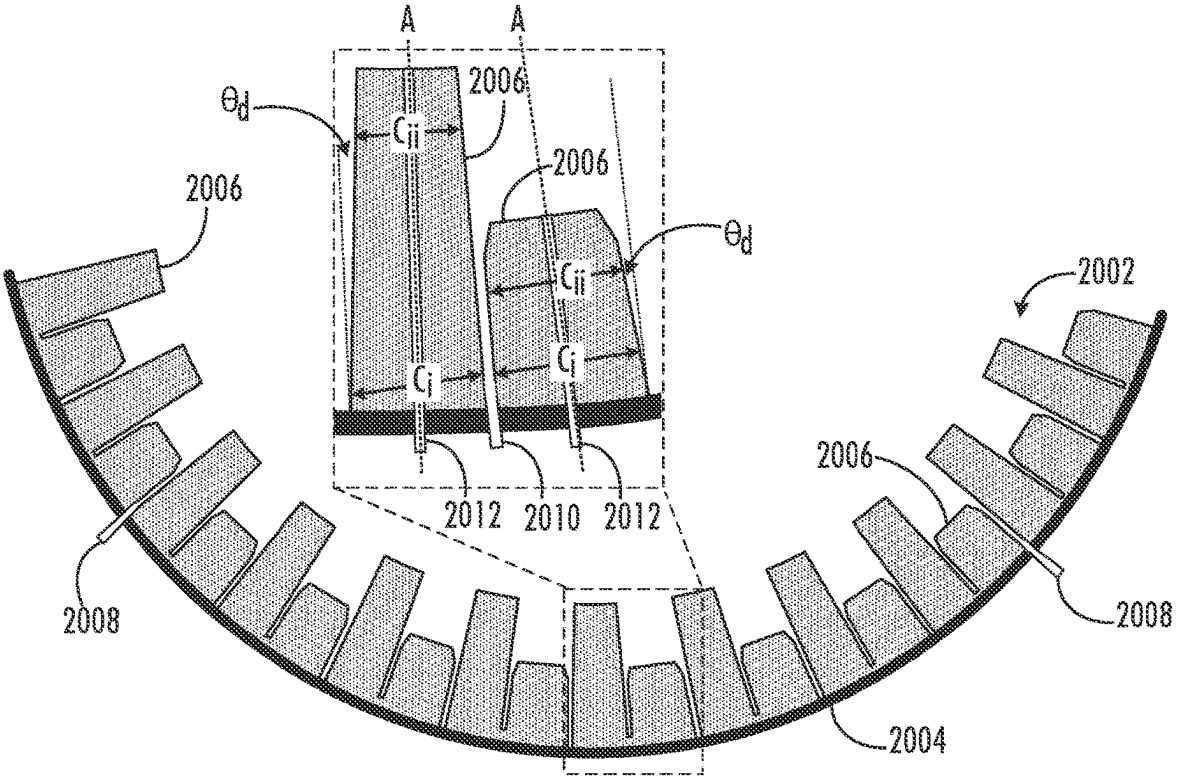

FIG. 20C

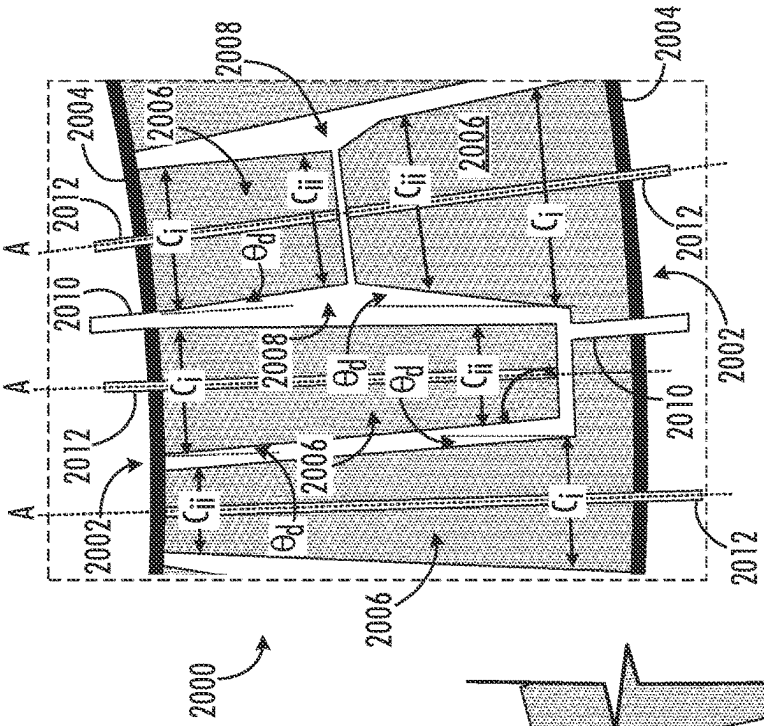

FIG. 20F

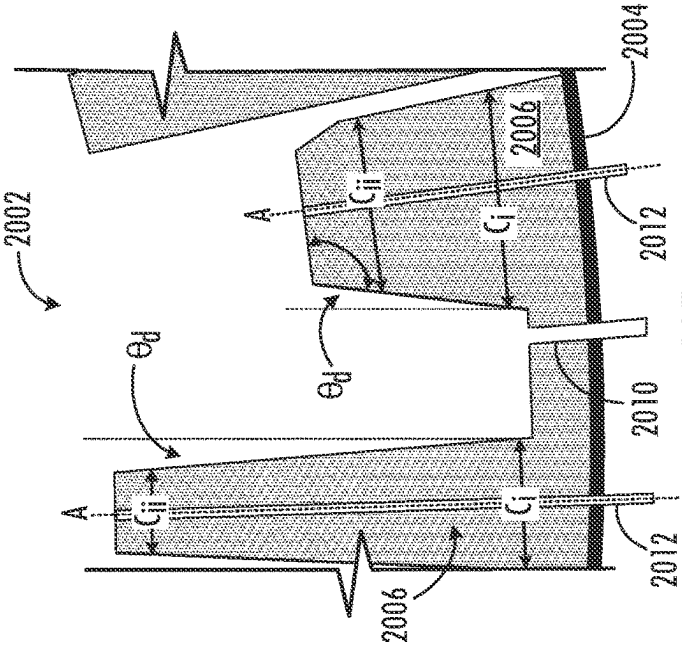

FIG. 20E

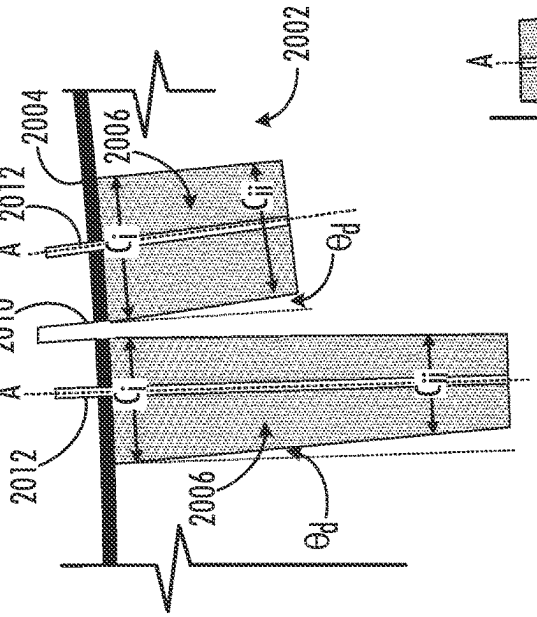

FIG. 20D

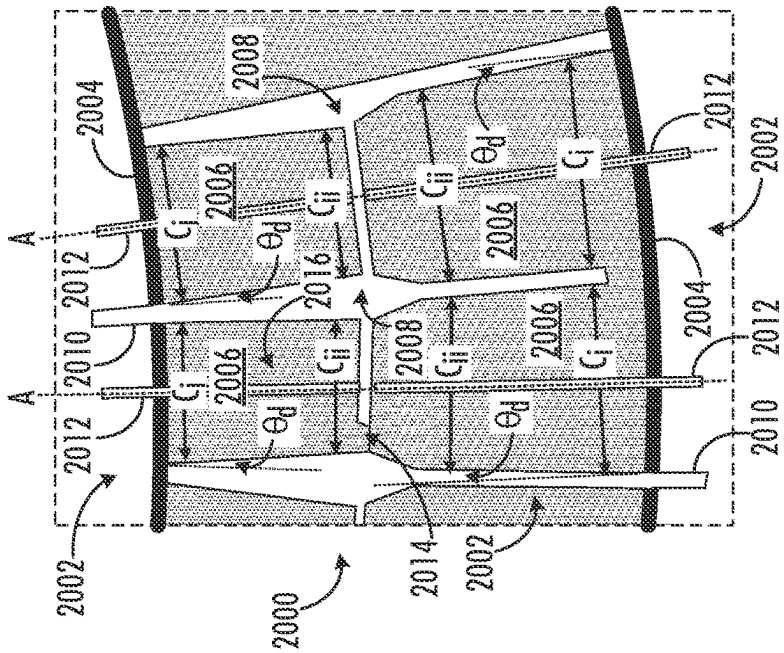

FIG. 20I

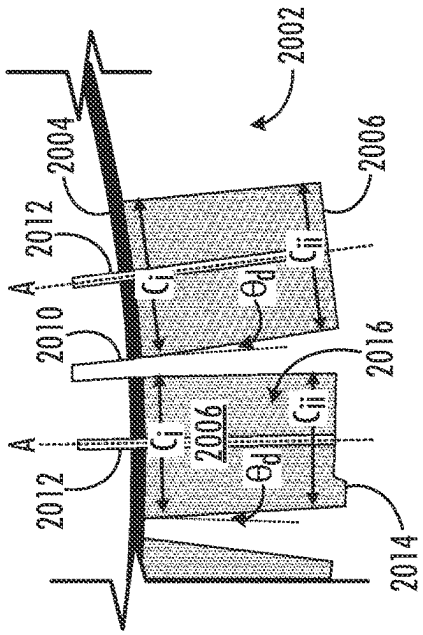

FIG. 20G

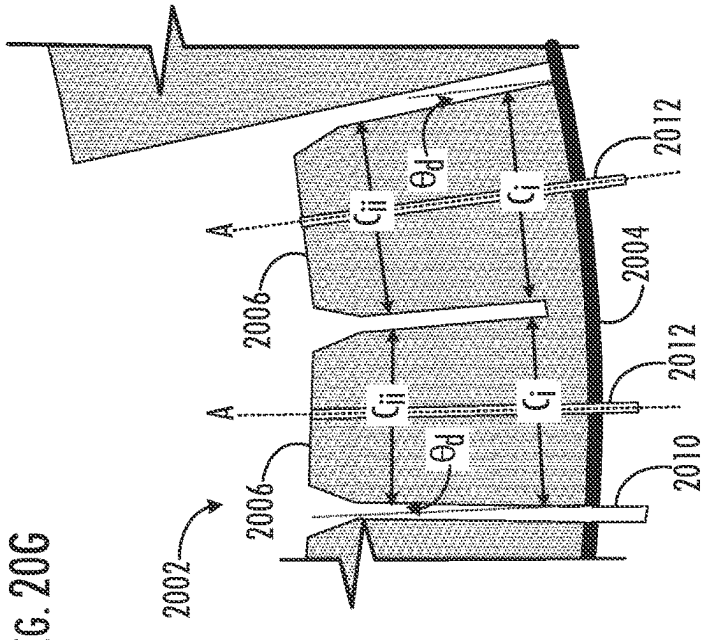

FIG. 20H

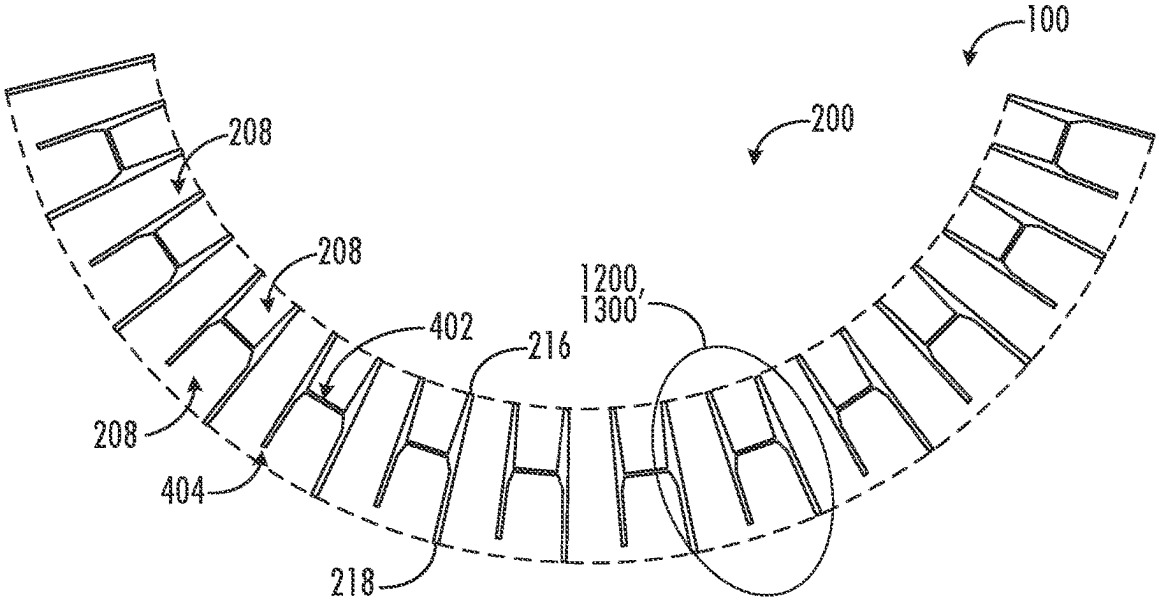

FIG. 21A

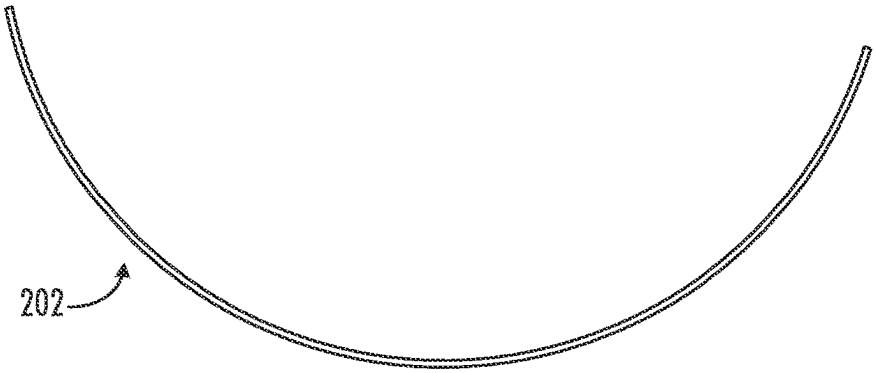

FIG. 21B

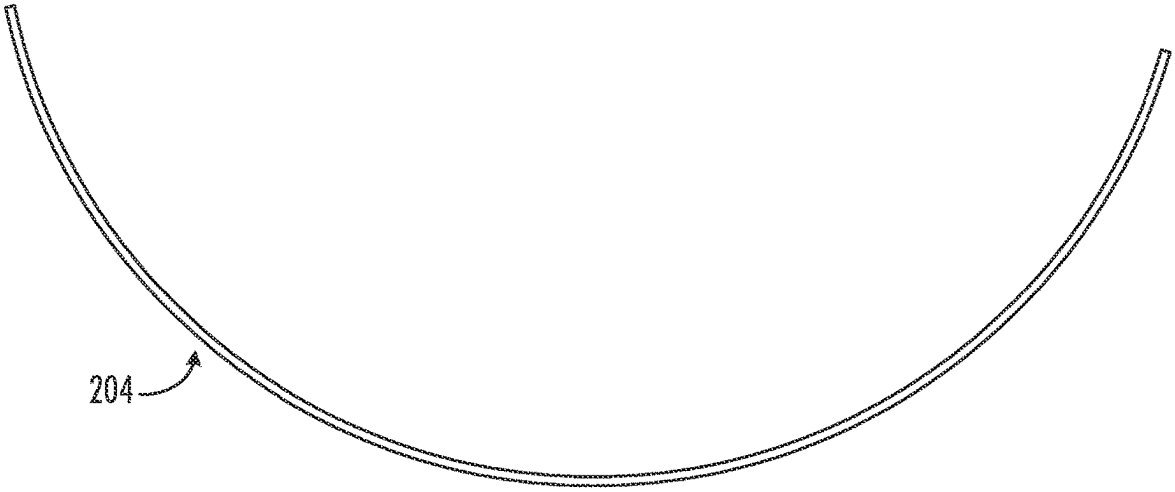

FIG. 21C

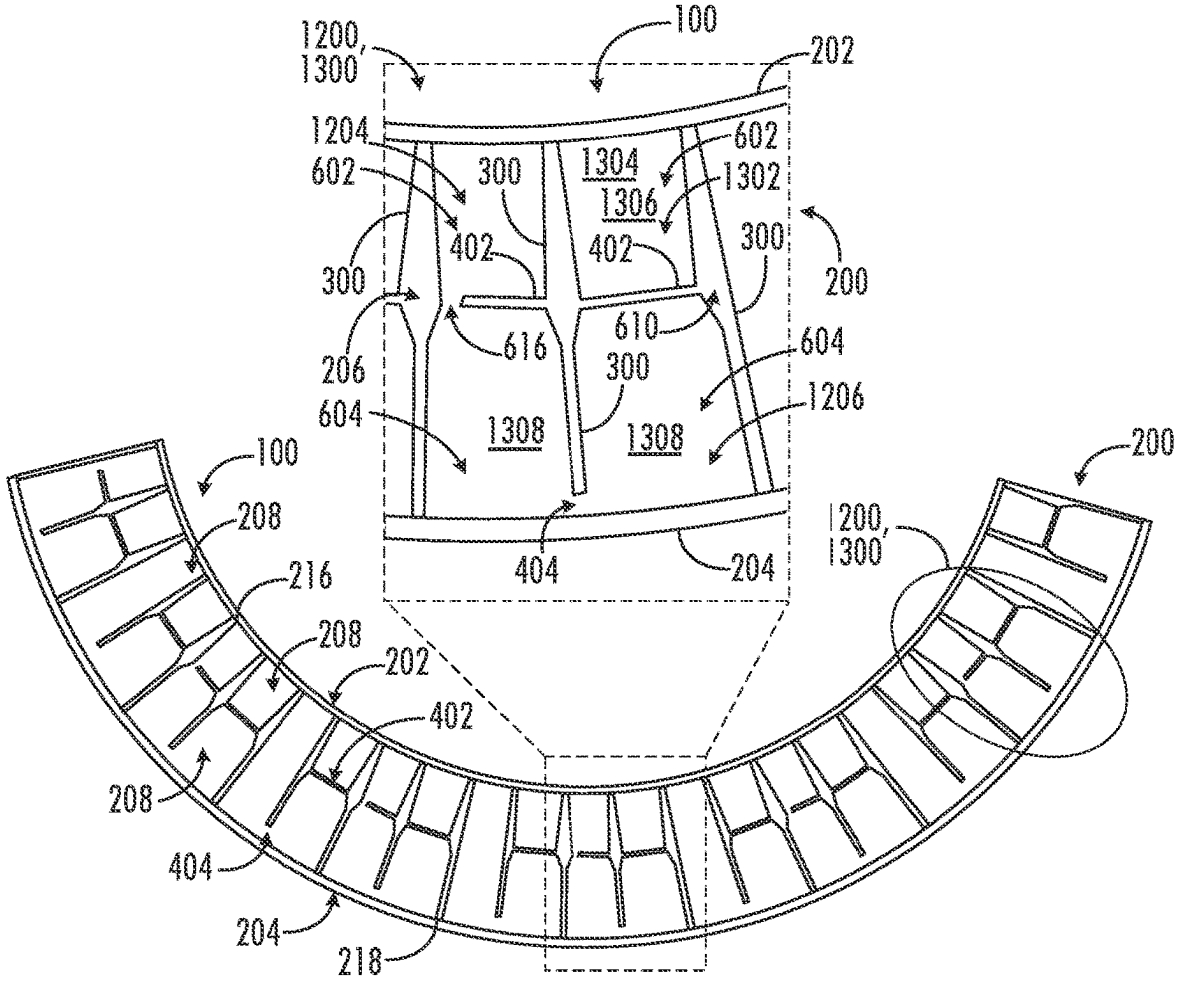
1200,
1300
100
202
1204
602
300
1304
602
1306
1302
402
402
300
300
200
206
616
610
604
300
604
1308
1308
1206
100
200
208
1200,
1300
216
404
204
208
202
402
208
404
204
218

FIG. 21D

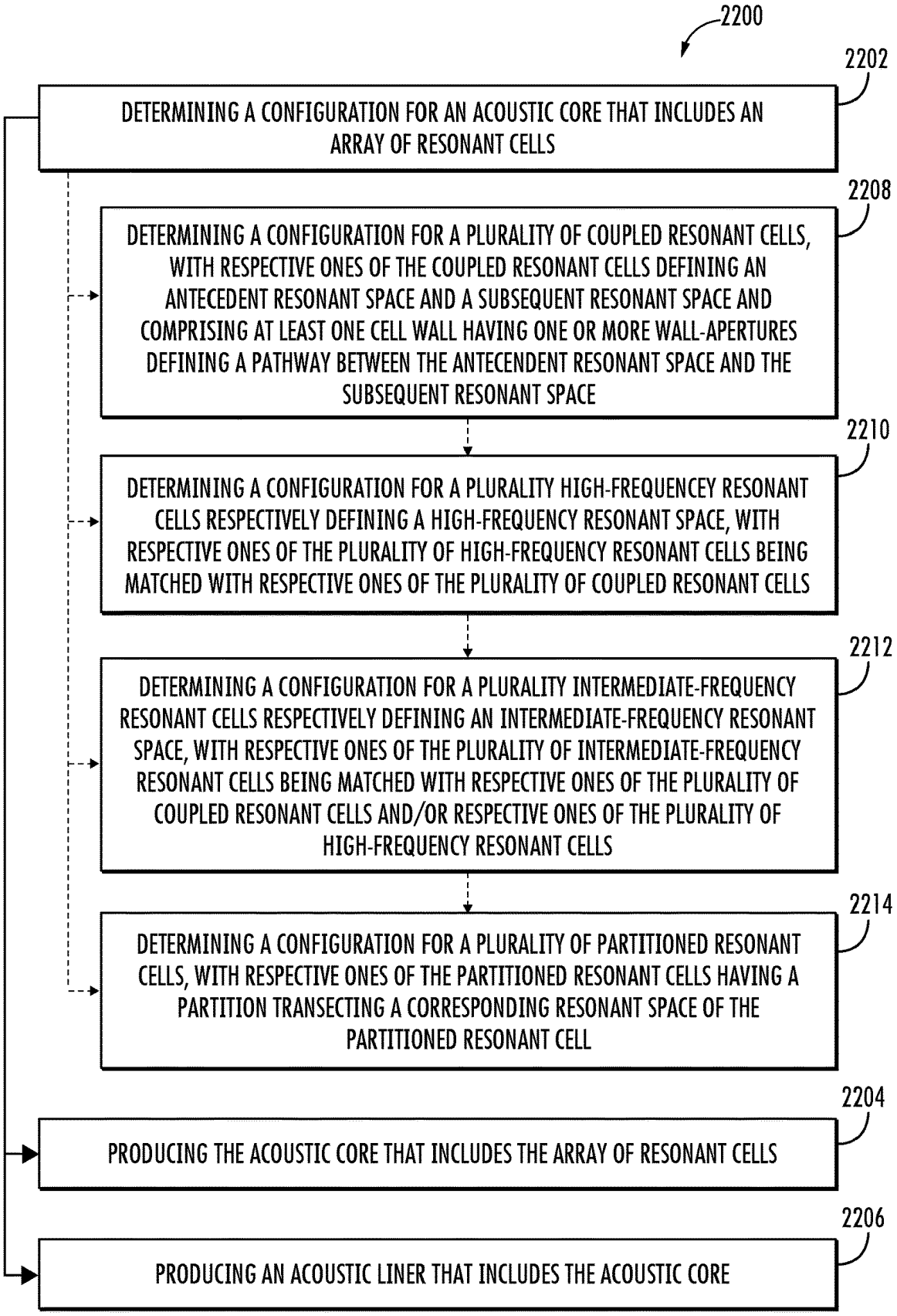
2200
2202
DETERMINING A CONFIGURATION FOR AN ACOUSTIC CORE THAT INCLUDES AN ARRAY OF RESONANT CELLS
2208
DETERMINING A CONFIGURATION FOR A PLURALITY OF COUPLED RESONANT CELLS, WITH RESPECTIVE ONES OF THE COUPLED RESONANT CELLS DEFINING AN ANTECEDENT RESONANT SPACE AND A SUBSEQUENT RESONANT SPACE AND COMPRISING AT LEAST ONE CELL WALL HAVING ONE OR MORE WALL-APERTURES DEFINING A PATHWAY BETWEEN THE ANTECENDENT RESONANT SPACE AND THE SUBSEQUENT RESONANT SPACE
2210
DETERMINING A CONFIGURATION FOR A PLURALITY HIGH-FREQUENCEY RESONANT CELLS RESPECTIVELY DEFINING A HIGH-FREQUENCY RESONANT SPACE, WITH RESPECTIVE ONES OF THE PLURALITY OF HIGH-FREQUENCY RESONANT CELLS BEING MATCHED WITH RESPECTIVE ONES OF THE PLURALITY OF COUPLED RESONANT CELLS
2212
DETERMINING A CONFIGURATION FOR A PLURALITY INTERMEDIATE-FREQUENCY RESONANT CELLS RESPECTIVELY DEFINING AN INTERMEDIATE-FREQUENCY RESONANT SPACE, WITH RESPECTIVE ONES OF THE PLURALITY OF INTERMEDIATE-FREQUENCY RESONANT CELLS BEING MATCHED WITH RESPECTIVE ONES OF THE PLURALITY OF COUPLED RESONANT CELLS AND/OR RESPECTIVE ONES OF THE PLURALITY OF HIGH-FREQUENCY RESONANT CELLS
2214
DETERMINING A CONFIGURATION FOR A PLURALITY OF PARTITIONED RESONANT CELLS, WITH RESPECTIVE ONES OF THE PARTITIONED RESONANT CELLS HAVING A PARTITION TRANSECTING A CORRESPONDING RESONANT SPACE OF THE PARTITIONED RESONANT CELL
2204
PRODUCING THE ACOUSTIC CORE THAT INCLUDES THE ARRAY OF RESONANT CELLS
2206
PRODUCING AN ACOUSTIC LINER THAT INCLUDES THE ACOUSTIC CORE

FIG. 22A

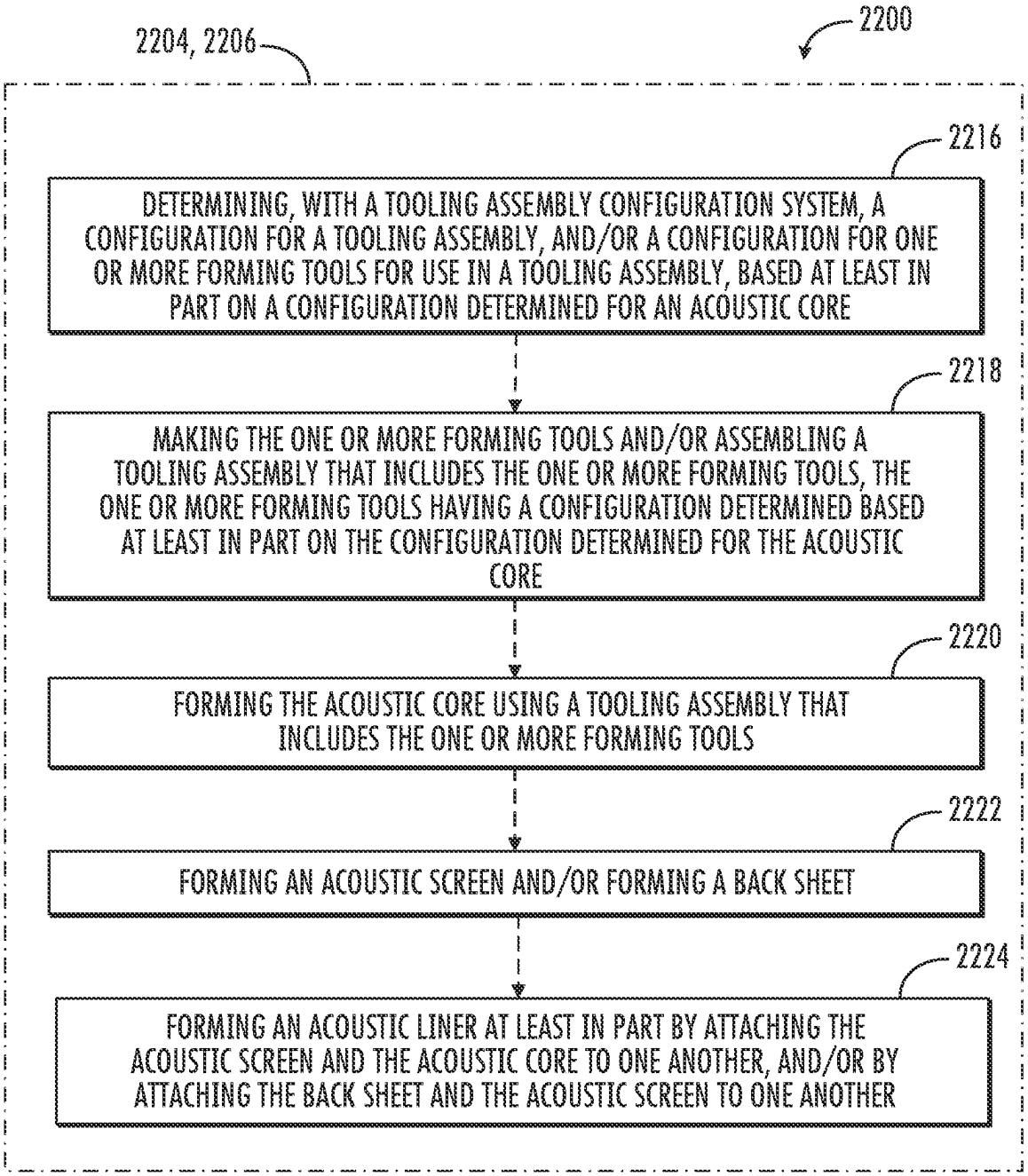
2200
2204, 2206
2216
DETERMINING, WITH A TOOLING ASSEMBLY CONFIGURATION SYSTEM, A CONFIGURATION FOR A TOOLING ASSEMBLY, AND/OR A CONFIGURATION FOR ONE OR MORE FORMING TOOLS FOR USE IN A TOOLING ASSEMBLY, BASED AT LEAST IN PART ON A CONFIGURATION DETERMINED FOR AN ACOUSTIC CORE
2218
MAKING THE ONE OR MORE FORMING TOOLS AND/OR ASSEMBLING A TOOLING ASSEMBLY THAT INCLUDES THE ONE OR MORE FORMING TOOLS, THE ONE OR MORE FORMING TOOLS HAVING A CONFIGURATION DETERMINED BASED AT LEAST IN PART ON THE CONFIGURATION DETERMINED FOR THE ACOUSTIC CORE
2220
FORMING THE ACOUSTIC CORE USING A TOOLING ASSEMBLY THAT INCLUDES THE ONE OR MORE FORMING TOOLS
2222
FORMING AN ACOUSTIC SCREEN AND/OR FORMING A BACK SHEET
2224
FORMING AN ACOUSTIC LINER AT LEAST IN PART BY ATTACHING THE ACOUSTIC SCREEN AND THE ACOUSTIC CORE TO ONE ANOTHER, AND/OR BY ATTACHING THE BACK SHEET AND THE ACOUSTIC SCREEN TO ONE ANOTHER

FIG. 22B

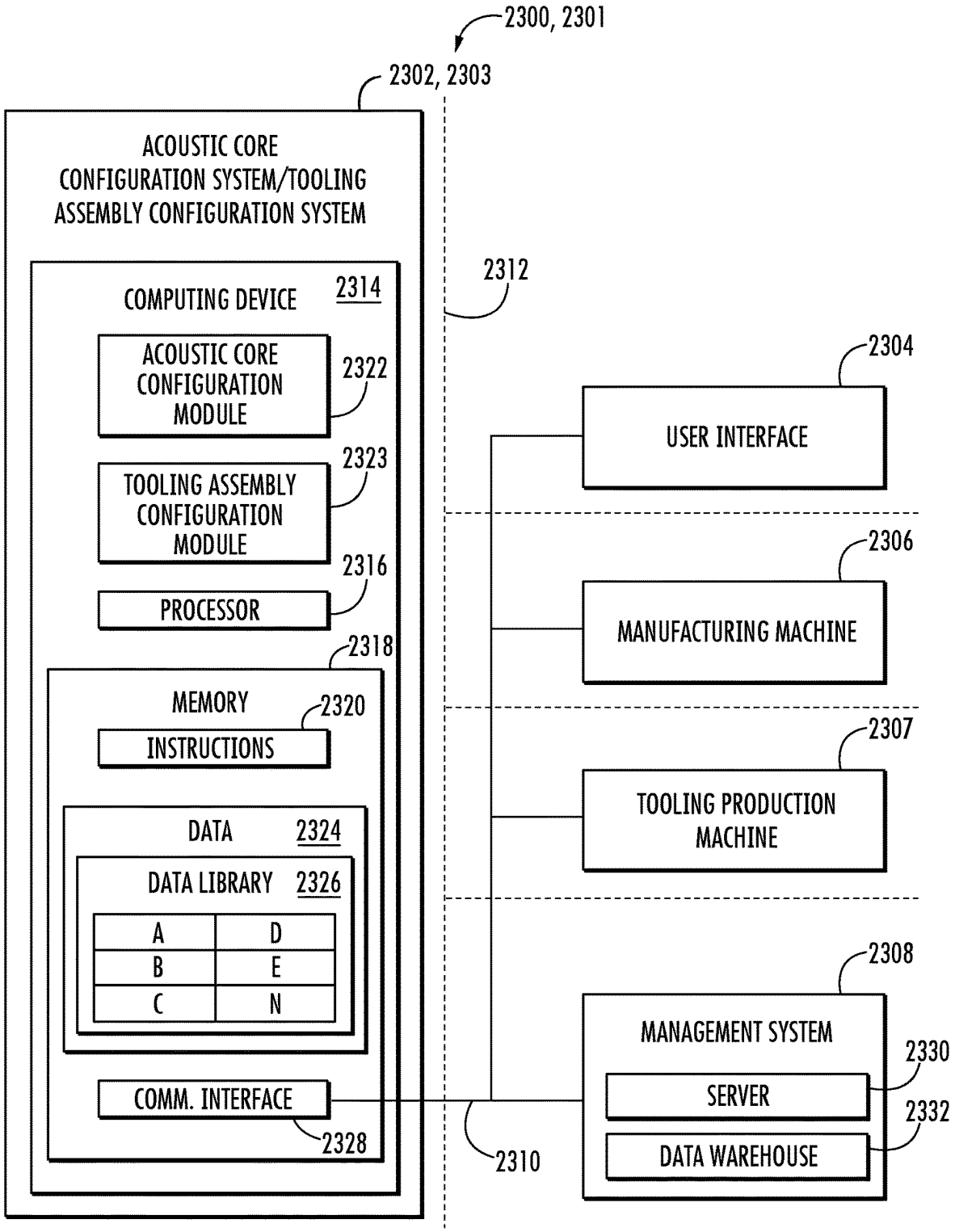
2300, 2301
2302, 2303
ACOUSTIC CORE CONFIGURATION SYSTEM/TOOLING ASSEMBLY CONFIGURATION SYSTEM
COMPUTING DEVICE
2314
ACOUSTIC CORE CONFIGURATION MODULE
2322
TOOLING ASSEMBLY CONFIGURATION MODULE
2323
PROCESSOR
2316
MEMORY
2318
INSTRUCTIONS
2320
DATA
2324
DATA LIBRARY
2326
A
D
B
E
C
N
COMM. INTERFACE
2328
2312
2310
USER INTERFACE
2304
MANUFACTURING MACHINE
2306
TOOLING PRODUCTION MACHINE
2307
MANAGEMENT SYSTEM
2308
SERVER
2330
DATA WAREHOUSE
2332

FIG. 23

TOOLS AND METHODS FOR FORMING ACOUSTIC CORES

CROSS-REFERENCE TO RELATED APPLICATION

This application claims priority to and is a divisional application of U.S. patent application Ser. No. 17/338,073, filed Jun. 3, 2021, now allowed, which is incorporated herein by reference in its entirety.

FEDERALLY SPONSORED RESEARCH

This invention was made with government support under contract number DTFAWA-15-A-80013 awarded by the United States Department of Transportation Federal Aviation Administration (FAA). The government has certain rights in the invention.

FIELD

The present disclosure pertains to acoustic cores used in liners for attenuating noise, such as noise from a turbomachine, tools for forming acoustic cores, and methods of forming acoustic cores.

BACKGROUND

Acoustic liners may be used to dampen or attenuate sound waves. For example, acoustic liners are used to dampen or attenuate noise from turbomachines such as turbofan engines as well as noise from other devices such as wind turbine blades. It would be welcomed in the art to provide improved acoustic liners and acoustic cores, including acoustic liners and acoustic cores that provide improved attenuation of sound waves, as well as improved methods of forming acoustic liners and acoustic cores that have improved attenuation of sound waves.

BRIEF DESCRIPTION

Aspects and advantages will be set forth in part in the following description, or may be apparent from the description, or may be learned through practicing the presently disclosed subject matter.

In one aspect, the present disclosure embraces acoustic cores. An exemplary acoustic core may include an array of resonant cells. In some embodiments, the array of resonant cells may be configured as a plurality of resonant cell groups. The resonant cell groups may include a plurality of resonant cells configured as a partitioned resonant cell that include a converging resonant cell and a diverging resonant cell. The converging resonant cell and the diverging resonant cell may be defined by a plurality of cell walls integrally formed with one another and a partition integrally formed with the plurality of cell walls. The partition may at least partially delimit the converging resonant cell from the diverging resonant cell. The converging resonant cell may define an upper resonant space delimited by the partition and a top face of the array of resonant cells. The diverging resonant cell may define a lower resonant space delimited by the partition and a bottom face of the array of resonant cells. The present disclosure also embraces acoustic liners. Exemplary acoustic liners may include an acoustic core as described herein.

In another aspect, the present disclosure embraces methods of making an acoustic core. An exemplary method may include determining, with a tooling assembly configuration system, a configuration for a tooling assembly and/or a configuration for one or more forming tools for use in the tooling assembly. The method may additionally or alternatively include making the one or more forming tools and/or assembling a tooling assembly that includes the one or more forming tools, and forming the acoustic core using the tooling assembly that includes the one or more forming tools. The tooling assembly and/or the one or more forming tools may have a configuration determined based at least in part on a configuration determined for the acoustic core.

In yet another aspect, the present disclosure embraces tooling assemblies for forming an acoustic core. An exemplary tooling assembly may include a plurality of forming tools. Respective ones of the plurality of forming tools may include a support member and a plurality of forming elements coupled to the support member. When the plurality of forming tools are in operating proximity to one another, a mold cavity defined at least in part by the plurality of forming elements may correspond to an acoustic core to be formed by the tooling assembly.

In still another aspect, the present disclosure embraces computer-readable media that have computer-executable instructions. The computer-executable instructions, when executed by a processor, may be configured to cause the processor to perform any method described herein. By way of example, an exemplary computer-readable medium may include computer-executable instructions which, when executed by a process, cause the processor to perform a method presently disclosed herein.

These and other features, aspects and advantages will become better understood with reference to the following description and appended claims. The accompanying drawings, which are incorporated in and constitute a part of this specification, illustrate exemplary embodiments and, together with the description, serve to explain certain principles of the presently disclosed subject matter.

BRIEF DESCRIPTION OF THE DRAWINGS

A full and enabling disclosure, including the best mode thereof, directed to one of ordinary skill in the art, is set forth in the specification, which makes reference to the appended Figures, in which:

FIG. **1**A schematically depicts a perspective partial cutaway view of an exemplary turbomachine that has an acoustic liner;

FIG. **1**B schematically depicts an aircraft equipped with a turbomachine that has an acoustic liner;

FIG. **1**C schematically depicts a wind turbine equipped with an acoustic liner;

FIG. **2** schematically depicts an isometric partial cutaway view of a portion of an exemplary acoustic liner;

FIGS. **3**A-**3**C respectively depict a top perspective view, a side view, and a bottom perspective view, of an acoustic core;

FIGS. **4**A and **4**B schematically depict exemplary sound paths through an aperture in a resonant cell;

FIG. **5** schematically depicts a relationship between the resonant frequency of a resonant cell and the size of an aperture included in a partition or cell wall of the resonant cell;

FIGS. **6**A-**6**C schematically depict exemplary side cross-sectional views of resonant cells that may be included in an acoustic core;

FIGS. **6**D and **6**E schematically depict enlarged side cross-sectional views of a partition transecting a resonant space of a resonant cell, such as the resonant cell of FIG. **6**A or **6**C;

FIGS. **7**A-**7**C schematically depict facing views of exemplary partition-apertures defining a pathway through a partition or exemplary wall-apertures defining a pathway through a cell wall of a resonant cell;

FIG. **7**D schematically depicts a side cross-sectional view of an exemplary partition that includes a partition-aperture such as shown in FIGS. **8**A-**8**C;

FIGS. **8**A-**8**D schematically depict additional exemplary side cross-sectional views of a partition transecting a resonant space of a resonant cell;

FIGS. **9**A-**9**F schematically depict corresponding facing views and a side cross-sectional views of additional exemplary partitions that include a partition-aperture;

FIG. **10**A schematically depicts a perspective view of an exemplary wall-aperture defining a pathway through a cell wall;

FIGS. **10**B-**10**D schematically depict facing views of exemplary wall-apertures defining a pathway through a cell wall;

FIG. **11** schematically depict additional exemplary aperture configurations;

FIGS. **12**A and **12**B schematically depict exemplary coupled resonant cells;

FIGS. **13**A-**13**H schematically depict side cross-sectional views of respective additional exemplary resonant cell groups;

FIGS. **14**A-**14**F schematically depict top cross-sectional views of exemplary arrays of resonant cells;

FIGS. **15**A-**15**D schematically depict side cross-sectional views of exemplary arrays of resonant cells;

FIGS. **16**A and **16**B schematically depicts cross-sectional views of exemplary acoustic cores with a convex curvilinear profile;

FIG. **16**C schematically depict a cross-sectional view of an exemplary acoustic core with a concave curvilinear profile;

FIG. **17**A schematically depicts an exemplary resonant cell group that may be included in the acoustic core shown in FIG. **16**A;

FIG. **17**B schematically depicts an exemplary resonant cell group that may be included in the acoustic core shown in FIG. **16**B;

FIG. **17**C schematically depicts another exemplary resonant cell group that may be included in the acoustic core shown in FIG. **16**A;

FIG. **17**D schematically depicts another exemplary resonant cell group that may be included in the acoustic core shown in FIG. **16**B;

FIG. **18** schematically depicts a perspective view of another exemplary resonant cell group;

FIG. **19** schematically depicts additional exemplary polyhedral structures that may be included in an array of resonant cells;

FIGS. **20**A-**20**I schematically depict exemplary tooling assemblies for forming an acoustic core in accordance with exemplary embodiments;

FIG. **21**A schematically depicts a cross-sectional view of another exemplary acoustic core with a curvilinear profile, such as an acoustic core formed using the exemplary tools shown in FIGS. **20**A-**20**C;

FIGS. **21**B and **21**C schematically depict a cross-sectional view of an exemplary acoustic screen and an exemplary back sheet, respectively, corresponding to the exemplary acoustic core shown in FIG. **21**A;

FIG. **21**D schematically depicts a cross-sectional view of an exemplary acoustic liner formed using the acoustic core shown in FIG. **21**A, the acoustic screen shown in FIG. **21**B, and the back sheet shown in FIG. **21**C;

FIGS. **22**A and **22**B respectively show a flow chart depicting exemplary methods of producing an acoustic core and/or an acoustic liner; and

FIG. **23** schematically depicts an exemplary acoustic core manufacturing system.

Repeat use of reference characters in the present specification and drawings is intended to represent the same or analogous features or elements of the present disclosure.

DETAILED DESCRIPTION

Reference now will be made in detail to exemplary embodiments of the presently disclosed subject matter, one or more examples of which are illustrated in the drawings. Each example is provided by way of explanation and should not be interpreted as limiting the present disclosure. In fact, it will be apparent to those skilled in the art that various modifications and variations can be made in the present disclosure without departing from the scope of the present disclosure. For example, features illustrated or described as part of one embodiment can be used with another embodiment to yield a still further embodiment. Thus, it is intended that the present disclosure covers such modifications and variations as come within the scope of the appended claims and their equivalents.

Acoustic liners for damping or attenuating sound waves, as well as methods of forming such acoustic liners, are described herein. Acoustic liners may be used, for example, to dampen or attenuate noise generated by or emanating from various aspects or components of turbomachines, such as turbofan engines used in aircraft, including commercial, military, and civilian aircraft. Acoustic liners may be used for damping and attenuating noise from a wide variety of turbomachines, including, turbojets, turbofans, turboprops, turboshafts, ramjets, pulse-jets, turbines, gas turbines, steam turbines, marine engines, and the like. Additionally, or in the alternative, acoustic liners may be used to dampen or attenuate sound waves from other aircraft structures and/or wind turbine structures, including, for example, noise generated by fan blades, turbine blades, and so forth. Acoustic liners may be applied to the trailing edge, leading edge, or elsewhere on turbine blades of a wind turbine as well as fan blades of any other turbomachine, as well as other rotating or stationary vanes or other structures. More broadly, acoustic liners may be used to dampen or attenuate sound waves from any source that might be within the contemplation of those skilled in the art.

Industry trends in aircraft turbomachine design are moving towards engines with increasingly higher bypass ratios, for example, in an effort to reduce fuel consumption and emissions. Turbofan engines with higher bypass ratios tend to have nondimensionally slimmer, shorter nacelles, which reduces the volume available for acoustic liners for noise attenuation. Additionally, industry trends are moving towards turbofan engines with fewer fan blades and lower rotational speeds, which increases the proportion of lower frequency sound waves within the noise spectrum generated by the engine. An acoustic liner may benefit from relatively deeper resonant cells in order for the acoustic liner to sufficiently attenuate lower frequency sound waves. However, available space for acoustic liners is becoming increas-

ingly constrained as engine designs continue to trend towards increasingly higher bypass ratios, fewer fan blades, and lower rotational speeds. Similarly core liners aft of a turbine seek to attenuate comparatively low frequency core noise in comparatively reduced volume available for liners.

With wind turbines, industry trends are moving towards higher per-turbine energy capture, which corresponds to higher turbine diameters, for which maintaining lower rotational speeds for reduced noise operation presents design constraints that increase the cost of energy captured by the wind turbine. Acoustic liners may be added to wind turbine blades, allowing for either quieter noise levels during operations or higher tip speeds at a given noise level, thus reducing net system costs for wind turbine operations. However, the available space on wind turbine blades is also constrained, which in turn, constrains the depth of resonant cells and corresponding attenuation of lower frequency sound waves. By placing acoustic liner treatment on the blade in regions where the turbulent flow effects dominate the observable noise radiation, it is possible to scale wind turbine noise below current levels.

The presently disclosed acoustic liners include an acoustic core having an array of resonant cells, that may be configured, for example, to provide improved attenuation of low-frequency sound waves. Additionally, or in the alternative, the array of resonant cells may be configured to attenuate a range of resonant frequencies, including low-frequency sound waves, high-frequency sound waves, and/or intermediate-frequency sound waves. The resonant cells within the array may include one or more cell walls and a resonant space defined by the one or more cell walls.

In some embodiments, the resonant frequency of a resonant cell may be reduced by providing one or more apertures in a cell wall and/or a partition of a resonant cell. Such apertures have been shown to introduce wave propagations that increase wave propagation distance relative to primary wave propagation patterns along the axial length of a resonant space. As a result of such wave propagations, resonant cells with an aperture may exhibit a lower resonant frequency. One or more apertures in a cell wall may define a pathway between an antecedent resonant space and a subsequent resonant space of respective resonant cells. One or more apertures in a partition of a resonant cell may define a pathway between an upper resonant space and a lower resonant space. The one or more apertures provide a combined resonant space that has an axial length that includes the resonant space on opposite sides of the aperture. In some embodiments, the one or more apertures may be selectively configured to down-scale the resonant frequency according to an aperture reduction factor, such that the resonant length of the combined resonant space exceeds the height or axial length of such resonant space (see e.g., FIG. **5**).

A resonant cell that has a partition transecting the resonant cell, with or without an aperture defining a pathway through the partition, may be referred to as "partitioned resonant cells." An aperture in a cell wall may be referred to as a "wall-aperture." An aperture in a partition may be referred to as a "partition aperture."

A resonant cell may be configured as a perpendicular resonant cell or an oblique resonant cell. As used herein, the term "perpendicular resonant cell" refers to a resonant cell that has a resonant space with a longitudinal axis that follows a path equidistant from and locally normal to the cell walls, with the longitudinal axis, A, having a perpendicular orientation relative to the top face and/or the bottom face of the resonant cell. As used herein, the term "oblique resonant cell" refers to a resonant cell that has a resonant space with a longitudinal axis, A, that follows a path equidistant from and locally normal to the cell walls, with the longitudinal axis having an oblique orientation relative to the top face and/or the bottom face of the resonant cell. In some embodiments, the resonant frequency of a resonant cell may be reduced by orienting a resonant cell obliquely relative to a top face and/or a bottom face of the acoustic core. An oblique resonant cell may include one or more partitions such that the oblique resonant cell may be a partitioned resonant cell. Additionally or in the alternative, an oblique resonant cell may define a portion of a coupled resonant cell.

An array of resonant cells may include one or more resonant cell groups. The term "resonant cell group" refers to a plurality of resonant cells that are matched or grouped with one another in a recognizable pattern that repeats across at least a portion of an array of resonant cells. The recognizable pattern may include resonant cells that geometrically fit with one another, and/or resonant cells that are tuned to attenuate a complementary range of resonant frequencies. A resonant cell group may include one or more coupled resonant cells. As used herein, the term "coupled resonant cell" refers to a resonant cell that has an aperture in a cell wall adjoining an antecedent resonant space and a subsequent resonant space. A resonant cell group may include one or more reduced-frequency resonant cells, which may be low-frequency resonant cells, high-frequency resonant cells, and/or intermediate-frequency resonant cells. A coupled resonant cell may define a portion of a partitioned resonant cell.

As used herein, the term "reduced-frequency resonant cell" refers to a resonant cell that has one or more structures that reduce the resonant frequency of the cell's resonant space as compared to a corresponding nominal resonant cell. For example, a reduced frequency resonant cell may include a partition with one or more apertures that reduce the resonant frequency of the cell's resonant space. Additionally, or in the alternative, a coupled resonant cell may be a reduced frequency resonant cell when one or more apertures in a cell wall have an aperture reduction factor that reduces the resonant frequency of the combined resonant space, such as an aperture reduction factor from $0\leq$ to <1.0 (see e.g., FIG. **5**). A reduced-frequency resonant cell may be tuned to any desired resonant frequency. For example, reduced-frequency resonant cell may be a low-frequency resonant cell, a high-frequency resonant cell, or an intermediate-frequency resonant cell.

The term "nominal resonant cell" refers to a resonant cell that would result from modifying or eliminating the one or more structures of a reduced-frequency resonant cell to which a reduced resonant frequency is attributed. For example, a nominal resonant cell would result from eliminating a partition that contains one or more apertures from a resonant cell. Additionally, or in the alternative, a nominal resonant cell would result from decreasing the aperture reduction factor of one or more apertures in a cell wall so as to eliminate the reduction in resonant frequency attributable to the one or more apertures in the cell wall, such as decreasing the aperture reduction factor to 0.0 (see e.g., FIG. **5**).

The term "low-frequency resonant cell" refers to a resonant cell that is tuned to a resonant frequency that has a corresponding resonant length that exceeds the height or axial length of the resonant cell or the height of the acoustic core in which the low-frequency resonant cell is included. The term "high-frequency resonant cell" refers to a resonant cell in a resonant cell group that is tuned to a resonant frequency that is greater than a low-frequency resonant cell"

in the resonant cell group. The term "intermediate-frequency resonant cell" refers to a resonant cell in a resonant cell group that is tuned to a resonant frequency that is less than a high-frequency resonant cell in the resonant cell group and greater than a low-frequency resonant cell in the resonant cell group.

As used herein, the term "resonant length," with respect to a subject resonant cell, refers to the axial length along the longitudinal axis of a resonant space of a nominal resonant cell that would provide a resonant frequency corresponding to the resonant space of the subject resonant cell. For a reduced-frequency resonant cell, the cell's resonant length exceeds the height or axial length of the cell's resonant space. For a nominal resonant cell, the axial length of the resonant space equals the resonant length. The longitudinal axis, A, of a resonant space generally refers to an axis transecting a resonant space equidistant from the cell walls defining the resonant space and oriented in the direction of wave propagation through the resonant space. For example, a resonant space with a perpendicular orientation relative to a top face and/or a bottom face of a resonant cell would have a longitudinal axis that also has a perpendicular orientation relative to a top face and/or a bottom face, whereas a resonant space with an oblique orientation relative to the top face and/or the bottom face would have a longitudinal axis that has a corresponding oblique orientation relative to the top face and/or the bottom face. For a curvilinear or irregular resonant space, including a combined resonant space of a coupled resonant cell, the longitudinal axis, A, follows a path equidistant from and locally normal to the cell walls defining the resonant space. As used herein, the term "axial length" with respect to a resonant cell or resonant space refers to a distance, L, along a longitudinal axis, A, that follows a path equidistant from and locally normal to the respective cell walls. As used herein, the term "height" with respect to a resonant cell, resonant space, and/or an acoustic core refers to a distance along a normal line oriented perpendicularly or radially relative to the top face and/or the bottom face. It will be appreciated that the resonant length of a resonant cell may differ from the axial length and/or height of the resonant cell depending on the configuration of the resonant cell.

The "resonant frequency" of a resonant cell refers the frequency with the greatest absorption coefficient for the resonant cell. It will be appreciated that the exemplary frequency values for low-frequency, high-frequency, and intermediate-frequency resonant cells herein are provided by way of example only and not to be limiting. Exemplary low-frequency resonant cells may be tuned, for example, to a resonant frequency of from about 200 Hz to about 3,000 Hz, such as from about 250 Hz to about 2,000 Hz, or such as from about 200 Hz to about 1,500 Hz. A low-frequency resonant cell may be tuned, for example, to a resonant frequency of less than about 2,500 Hz, such as less than 2,000 Hz, such as less than 1,500 Hz, such as less than 1,000 Hz, or such as less than 500 Hz. A low-frequency resonant cell may be tuned, for example, to a resonant frequency of at least 250 Hz, such as at least 500 Hz, such as at least 1,000 Hz, such as at least 1,500 Hz, or such as at least 2,000 Hz.

Exemplary high-frequency resonant cells may be tuned, for example, to a resonant frequency of from about 1,000 Hz to about 10,000 Hz, such as from about 1,000 Hz to about 6,000 Hz, such as from about 2,500 Hz to about 5,000 Hz, such as from about 3,000 Hz to about 4,500 Hz, or such as from about 4,000 Hz to 8,000 Hz. A high-frequency resonant cell may be tuned, for example, to a resonant frequency of less than about 10,000 Hz, such as less than about 8,000 Hz, such as less than about 6,000 Hz, such as less than about 5,000 Hz, such as less than 4,500 Hz, such as less than 4,000 Hz, such as less than 3,000 Hz, or such as less than 2,500 Hz. A high-frequency resonant cell may be tuned, for example, to a resonant frequency of at least 1,000 Hz, such as at least 2,000 Hz, such as at least 2,500 Hz, such as at least 3,000 Hz, such as at least 4,000 Hz, such as at least 4,500 Hz, such as at least 5,000 Hz, such as at least 6,000 Hz, or such as at least 8,000 Hz.

Exemplary intermediate-frequency resonant cells may be tuned, for example, to a resonant frequency of from about 400 Hz to about 6,000 Hz, such as from about 1,000 Hz to about 4,000 Hz, such as from about 1,500 Hz to about 3,500 Hz, or such as from about 1,000 Hz to about 3,000 Hz. An intermediate-frequency resonant cell may be tuned, for example, to a resonant frequency of less than about 6,000 Hz, such as less than about 4,000 Hz, such as less than 3,500 Hz, such as less than 3,000 Hz, such as less than 2,500 Hz, or such as less than 1,000 Hz. An intermediate-frequency resonant cell may be tuned, for example, to a resonant frequency of at least 400 Hz, such as at least 1,000 Hz, such as at least 2,000 Hz, such as at least 2,500 Hz, such as at least 3,000 Hz, such as at least 3,500 Hz, such as at least 4,000 Hz, or such as at least 5,000 Hz.

In some embodiments, the array of resonant cells may be produced using an additive manufacturing technology, which may allow for novel resonant cell configuration, geometries, and/or features described herein that may provide enhanced low-frequency noise attenuation. For example, the use of an additive manufacturing technology may allow for the formation of reduced-frequency resonant cells, including coupled resonant cells and partitioned resonant cells. Adjacent resonant cells may share integrally formed cell walls with one another. Additionally, or in the alternative, a partition may be integrally formed with one or more cell walls. As used herein, the term "integrally formed" means that two or more features are formed concurrently as part of the same process. For example, portions of an acoustic core or acoustic liner that are formed concurrently using an additive manufactured process are considered integrally formed. Portions of an acoustic core or acoustic liner that are first formed and then subsequently assembled or coupled to one another are not considered integrally formed. While additive manufacturing technology may be selected in some embodiments, it will be appreciated that the presently disclosed acoustic liners, acoustic cores, and features thereof, may be formed using other technology and references to additive manufacturing technology does not limit the scope of the present disclosure.

It is understood that terms "upstream" and "downstream" refer to the relative direction with respect to fluid flow in a fluid pathway. For example, "upstream" refers to the direction from which the fluid flows, and "downstream" refers to the direction to which the fluid flows. It is also understood that terms such as "top", "bottom", "outward", "inward", and the like are words of convenience and are not to be construed as limiting terms. As used herein, the terms "first", "second", and "third" may be used interchangeably to distinguish one component from another and are not intended to signify location or importance of the particular components. The terms "a" and "an" do not denote a limitation of quantity, but rather denote the presence of at least one of the referenced item.

Here and throughout the specification and claims, range limitations are combined and interchanged, and such ranges are identified and include all the sub-ranges contained therein unless context or language indicates otherwise. For

example, all ranges disclosed herein are inclusive of the endpoints, and the endpoints are independently combinable with each other.

Approximating language, as used herein throughout the specification and claims, is applied to modify any quantitative representation that could permissibly vary without a corresponding change in the basic function to which it is related. Accordingly, a value modified by a term or terms, such as "about", "approximately", and "substantially", are not to be limited to the precise value specified. In at least some instances, the approximating language may correspond to the precision of an instrument for measuring the value, or the precision of the methods or machines for constructing or manufacturing the components and/or systems. For example, the approximating language may refer to being within a 10 percent margin.

Exemplary embodiments of the present disclosure will now be described in further detail. As shown in FIG. **1**A, one or more acoustic liners **100** may provide a system for damping or attenuating sound waves, including sound waves associated with a turbomachine **102**. In an exemplary embodiment shown in FIG. **1**B, an aircraft **140** may include a turbomachine **102** (e.g., a turbofan engine) with one or more acoustic liners **100** configured to attenuate noise from the turbomachine **102**. In another exemplary embodiment shown in FIG. **1**C, a wind turbine **150** may include turbine blades **152** with one or more acoustic liners **100** applied to one or more portions of the turbine blades **152** to attenuate noise therefrom. For example, an acoustic liner may be applied to the leading edge region and/or the trailing edge region of the turbine blades **152** of the wind turbine **150**.

Still referring to FIG. **1**A, the turbomachine **102** may include a housing or nacelle **104** surrounding a turbine **106** and/or a fan rotor **108**, which includes a plurality of circumferentially spaced fan blades **110** powered by the turbine **106**. An exemplary housing or nacelle **104** includes an inlet **112** and a duct having a duct wall **114** that directs airflow **116** downstream through a fan rotor **108**, generally along a longitudinal axial centerline **118**. The acoustic liners **100** provide a system for damping or attenuating sound waves. An exemplary system may include one or more acoustic liners **100** disposed annularly along the duct wall **114**. The one or more acoustic liners **100** may have a position along the duct wall **114** located upstream from the fan blades **110**. One or more acoustic liners may also be positioned downstream from the fan blades **110**. For example, an acoustic liner may be positioned at or aft of an inner barrel **120** portion of the nacelle **104**. Additionally, or alternatively, one or more acoustic liners **100** may be positioned at or aft of a fan casing portion **122** and/or a transcowl portion **124** of a nacelle **104**. In some embodiments, a turbomachine **102** may include a plurality of housings **104** surrounding a turbine **106**. In some embodiments, a plurality of housings **104** may be configured and arranged annularly relative to one another. Each such housing **104** may include an inner duct wall **114** and an outer duct wall **114**. One or more acoustic liners **100** may be positioned about an inner duct wall **114** and/or an outer duct wall **114** of any one or more of a plurality of housings **104**. Additionally, one or more acoustic liners **100** may be positioned in proximity to non-rotating portions of the fan casing portion **122** or other components of the turbomachine **102**. These positions include ducts or casings within the turbomachine **102** where an acoustic liner may be useful for noise suppression (e.g., damping or attenuation) at various frequency ranges, including across a spectrum of frequency ranges. For example, one or more acoustic liners **100** may be positioned at a core cowl portion **126**. Those skilled in the art will appreciate even further areas where acoustic liners **100** may be positioned to dampen or attenuate noise generated by or emanating from various aspects of a turbomachine **102**, all of which are within the scope of the present disclosure.

In operation, a turbomachine **102** generates a lot of noise. To illustrate an exemplary source of turbomachine **102** noise, it will be appreciated that the fan rotor **108** rotates within the fan casing portion **122**, producing discrete tonal noise predominately at a blade passage frequency (BPF) and multiples thereof, as well as broadband noise over a wide frequency range. During take-off of the aircraft **140**, the fan blades **110** can reach transonic and supersonic rotational velocities, generating noise that propagates out of the fan duct into the surrounding environment. In exemplary embodiments, one or more acoustic liners **100** are configured and arranged to suppress noise resonating at the BPF and harmonics of the BPF as well as the dominant broadband noise contributions from the fan. The one or more acoustic liners **100** or various portions thereof may be configured to dampen or attenuate sound waves and thereby reduce the sound at specific frequencies or across a range of frequencies. Some aspects of an acoustic liner **100** may be configured to reflect or propagate incident sound waves multiple times before the sound waves escape the acoustic liner **100**. These multiple reflections may reduce the amplitude of the sound waves. Additionally, some aspects of an acoustic liner **100** may be configured to cause sound waves to become out-of-phase because of such reflections or propagations. When sound waves become out-of-phase, various portions of the sound waves tend to cancel one another, thereby reducing at least some of the energy in the sound waves.

FIG. **2** shows an isometric partial cutaway view of a portion of an exemplary acoustic liner **100**. The acoustic liner **100** shown in FIG. **2** may be configured for use with the turbomachine **102** shown in FIG. **1**A or for attenuating noise from any other source within the contemplation of those skilled in the art. In some embodiments, the acoustic liner **100** may be disposed proximate to airflow **116** (also shown in FIGS. **1**A-**1**C). The acoustic liner **100** may be secured within the turbomachine **102** by a flange or other attachment with the duct wall **114** and/or the fan casing portion **122**. The acoustic liner **100** includes an acoustic core **200** positioned between an acoustic screen **202** and a substantially imperforate back sheet **204**. The acoustic screen **202** may include a perforated plate, a mesh (e.g., formed of wire, cloth, fibers, and/or filaments), or a combination thereof. Additionally, or in the alternative, the acoustic screen **202** may include an additively manufactured component. In some embodiments, the acoustic screen **202** and back sheet **204** form planes having a generally parallel orientation relative to one another. The acoustic core **200** is made up of hollow cellular structures or resonant cells **206** disposed between the acoustic screen **202** and the back sheet **204**. The resonant cells **206** include a plurality of cell walls that define a hollow resonant space **208**.

The acoustic core **200**, the acoustic screen **202**, the back sheet **204** may be formed as part of an additive manufacturing technology or any other suitable process, separately or concurrently with one another. The acoustic screen **202** and/or the back sheet **204** may additionally or alternatively be formed as part of an any other manufacturing technology separately or concurrently with the acoustic core **200**. Additionally, or in the alternative, the acoustic screen **202** and/or the back sheet **204** may be combined with acoustic core **200**, for example, using an adhesive process such as a thermal,

sonic, or electric welding process. Alternatively, an adhesive formulation such as a thermosetting or pressure sensitive adhesive or an adhesive tape may be used to secure the acoustic screen **202** and/or the back sheet **204** to the acoustic core **200**.

A thickness or height of the acoustic core **200** may be defined by a distance taken along an axis R **214** (also shown in FIG. **1**A) between an inside surface of the acoustic screen **202** and an inside surface of the back sheet **204**. A top face **216** defines a first linear or curved surface of the acoustic core **200** and a bottom face **218** defines a second linear or curved surface of the acoustic core. The top face **216** resides adjacent to and oriented towards the inside surface of the acoustic screen **202**, and the bottom face **218** resides adjacent to and oriented towards the inside surface of the back sheet **204**. The axis R **214** represents a normal line relative to the normal surface corresponding to the top face **216** and/or the bottom face **218**. The axis R may be a radial or other axis as determined by context. In this exemplary embodiment, the terms "inner" and "outer" refer to the orientation of the respective layers in relation to the longitudinal axial centerline **118** shown in FIG. **1**A.

The acoustic screen **202**, the back sheet **204**, and the acoustic core **200** may together form an acoustic liner **100** that has an arcuate or cylindrical profile (see, e.g., FIG. **1**A), or a linear or planar profile (see, e.g., FIG. **2**). Of course, an acoustic liner may have any desired curvilinear profile. By way of example, an acoustic liner **100** may surround a noise source, such as fan blades **110** of a turbomachine **102**. The acoustic screen **202** is generally oriented along the flow path to form a smooth and efficient pathway for the engine flow, with the back sheet **204** being more distal from the noise source relative to the acoustic screen **202**. As another example, an enclosed volume such as a room or an engine casing may contain a noise source such as noisy machinery, and one or more walls or other aspects of such an enclosed volume may be lined with a substantially planar acoustic liner **100**. In exemplary embodiments, an acoustic core **200**, an acoustic screen **202**, and a back sheet **204**, may together form a complexly curved acoustic liner **100**, which, for example, may conform to complexly curved walls or other aspects of a nacelle **104** or other noise source-containing room or space may. For example, FIG. **1**A shows an exemplary curved acoustic liner **100** that conforms to the contour of a mounting location of a turbomachine **102**, such as a duct wall **114**, an inner barrel **120**, a fan casing portion **122**, a transcowl portion **124**, a core cowl portion **126**, and/or a nacelle **104**.

In exemplary embodiments, the acoustic core **200**, the acoustic screen **202**, and/or the back sheet **204** may be formed using an additive manufacturing technology, which may allow for acoustic liners **100** with novel configuration, geometries, and/or features that provide certain improvements and/or avoid certain shortcomings as compared with previous acoustic liners. Such additive manufacturing technology may be utilized, alone or together with other manufacturing technologies, to provide acoustic liners **100** in accordance with the present disclosure.

For example, an acoustic liner **100** may be formed in whole or in part using an additive manufacturing technology. Sequential layers of the acoustic core **200**, the acoustic screen **202**, and/or the back sheet **204** may be additively manufactured using a suitable additive manufacturing technology. In exemplary embodiments, the acoustic core **200**, the acoustic screen **202**, and/or the back sheet **204** may be additively manufactured in such a manner so as to be one and the same component without seams or the like separating elements from one another.

Now turning to FIGS. **3**A-**3**C, exemplary acoustic cores **200** will be described in further detail. As shown, an acoustic core **200** may include an array of resonant cells **206**. The resonant cells **206** may have a plurality of cell walls **300** bisected by a top face **216** and a bottom face **218**. The resonant cells **206** may have any polyhedral structures or combination of structures, including perpendicular resonant cells and/or oblique resonant cells. Perpendicular resonant cells generally have a longitudinal axis that runs perpendicular to the top face **216** and/or the bottom face **218** and/or substantially parallel to a normal line **214** represented by the axis R. Oblique resonant cells have a resonant space **208** with a longitudinal axis, A, that follows a path equidistant from and locally normal to the cell walls, with the longitudinal axis having an oblique orientation relative to the top face **216** and/or the bottom face **218**. The resonant length L of a resonant cell **206** may be determined, for a nominal resonant cell, from the bottom face **218** to the top face **216** as determined along a centerline of the resonant cell. The height H of a resonant cell **206** and/or an acoustic core **200** may be determined from the bottom face **218** to the top face **216** as determined along the normal line **214**.

An oblique resonant cell may be oriented obliquely relative to the longitudinal axis, A, of the resonant space at a cell angle θ_C. Oblique resonant cells may include a wide variety of cell angles θ_C ranging from greater than zero degrees to less than 90 degrees. For example, in exemplary embodiments, an oblique resonant cell may have a cell angle θ_C of from 5 to 90 degrees, such as from such as from 10 to 85 degrees, such as from 20 to 80 degrees, such as from 30 to 80 degrees, such as from 40 to 80 degrees, such as from 50 to 80 degrees, such as from 60 to 80 degrees, such as from 10 to 45 degrees, such as from 45 to 80 degrees, such as from 30 to 60 degrees, or such as from 35 to 50 degrees. The cell angle θ_C may be greater than zero degrees, such as such as at least 5 degrees, such as at least 10 degrees, such as at least 20 degrees, such as at least 30 degrees, such as at least 40 degrees, such as at least 50 degrees, such as at least 60 degrees, such as at least 70 degrees, such as at least 80 degrees. The cell angle θ_C may be less than 90 degrees, such as less than 80 degrees, such as less than 70 degrees, such as less than 60 degrees, such as less than 50 degrees, such as less than 40 degrees, such as less than 30 degrees, such as less than 20 degrees, such as less than 15 degrees, such as less than 10 degrees, such as less than 5 degrees, or such as less than 1 degrees. By comparison, perpendicular resonant cells have a cell angle θ_C of 90 degrees.

Now referring to FIGS. **4**A and **4**B, examples of sound wave propagation through one or more apertures will be described. In some embodiments, sound wave propagation characteristics may be tuned to a desired frequency at least in part by the configuration and arrangement of the one or more apertures. An array of resonant cells tuned for attenuation of lower frequency sound waves may include one or more apertures. A reduced-frequency resonant cell may include one or more apertures in a partition and/or a cell wall **300**. The one or more apertures may contribute to the reduced-frequency resonant cell exhibiting a lower resonant frequency as compared to a corresponding nominal resonant cell. By way of example, FIGS. **4**A and **4**B respectively show a partitioned resonant cell **600** with a partition **402** that transects the resonant space **208** and one or more apertures **404** defining a corresponding one or more pathways through the partition **402**.

As shown in FIG. **4**A, the aperture **404** has a location on the partition **402** aligned with a longitudinal axis **406** of the resonant space **208**, which may be referred to as a centered aperture **408**. As shown in FIG. **4**B, the aperture **404** has a location on the partition **402** offset from the longitudinal axis **406** of the resonant space **208**, which may be referred to as an offset aperture **410**. The wave propagation distance of a sound wave propagating from an aperture **404** prior to contacting a cell wall **300** or a back sheet **204** can be determined using the Pythagorean theorem. As shown, the propagation distance of a sound wave propagating from an aperture **404** increases when the aperture **404** is offset from the longitudinal axis **406**. By way of illustration, exemplary propagation paths show that for a given wave propagation angle, the wave propagation distance (D_1, D_2 and D_3) for an offset aperture **410** exceeds the corresponding wave propagation distance (D_1, D_2 an D_3) for a centered aperture **408**. In some embodiments sound waves propagating from an offset aperture **410** may exhibit enhanced reverberation within the resonant space **208** after propagating through the aperture **404**.

Additionally, or in the alternative, the resonant frequency of a resonant cell **206** may be reduced by decreasing the cross-sectional area of the aperture **404** relative to the cross-sectional area of the resonant cell. As shown in FIG. **5**, the resonant frequency has been shown to depend on an aperture reduction factor β. Resonant cells may be configured to exhibit a resonant frequency selected based at least in part on a relationship between an aperture reduction factor β for an aperture and a resonant frequency of the resonant cell, using the following relationship: $a=c(1-\beta)$, where "a" is the cross-sectional dimension of the aperture **404**, "c" is a cross-sectional dimension of the resonant space, and β is a real number selected from the relationship: $0\leq\beta<1.0$. The cross-sectional dimension of the aperture, "a" may include a cross-sectional area, or a cross-sectional width. The cross-sectional dimension of the resonant space, "c" may include a cross-sectional area, or a cross-sectional width. Additionally, or in the alternative, for a resonant cell that includes a plurality of apertures **404**, the cross-sectional dimension of the aperture **404** "a" may include percent open area.

A relationship between aperture reduction factor β and resonant frequency for a resonant cell configuration may be determined using resonant frequency modeling (e.g., finite element analysis), as will be appreciated by those skilled in the art. The relationship between the aperture reduction factor β and the resonant frequency of a resonant cell and may then be utilized to configure resonant cells with apertures **404** in partitions **402** transecting a resonant space of the resonant cell (e.g., partition-apertures) and/or to configure resonant cells with apertures **404** in cell walls (e.g., wall-apertures). By way of example, such configurations may include selecting a cross-sectional dimension for one or more apertures **404**, a cross-sectional dimension for one or more resonant spaces. Such cross-sectional dimensions may be based at least in part on an aperture reduction factor β. In some embodiments, as shown, for example, in FIG. **5**, the relationship between the aperture reduction factor β and the resonant frequency of the resonant cell may include a decreasing resonant frequency with increasing aperture reduction factor β. As shown, the relationship may include linear and/or non-linear regions. For example, an initially linear relationship may transition to non-linear relationship (e.g., an asymptotic relationship) with increasing aperture reduction factor β. Other relationships may also be apparent with various resonant cell configurations.

A resonant cell may be configured with any suitable aperture reduction factor β from between 0 to less than 1.0. In exemplary embodiments, an aperture reduction factor β may be from 0.2 to less than 1.0, such as from 0.5 to less than 1.0, such as from 0.7 to less than 1.0, such as from 0.9 to less than 1.0, such as from 0.3 to 0.8, such as from 0.6 to 0.99. A resonant cell may include an aperture **404** with an aperture reduction factor β of at least 0.1, such as at least 0.3, such as at least 0.5, such as at least 0.7, or such as at least 0.9. A resonant cell may include an aperture **404** with an aperture reduction factor β of less than 1.0, such as less than 0.95, such as less than 0.8, such as less than 0.6, or such as less than 0.4.

Now turning to FIGS. **6**A-**6**E, exemplary partition-apertures **616** will be described in further detail. In some embodiments, a resonant cell **206** may include one or more partitions **402** transecting the resonant space **208** of the resonant cell **206**. An acoustic core **200** may include an array of resonant cells **206**, with at least some of the resonant cells being partitioned resonant cells **600**. The partition **402** may transect at least a portion of a resonant space **208**, thereby delineating an upper resonant space **602** from a lower resonant space **604**. In some embodiments, a partition **402** may be integrally formed with at least one of the one or more cell walls **300** defining the resonant space **208**. For example, the resonant cells **206**, including the cell walls **300** and the partitions **402** may be produced using an additive manufacturing technology. Additionally, or in the alternative, the resonant cells **206**, including the cell walls **300** and/or the partitions **402** may be formed using any other suitable technology.

A partition **402** may transect a corresponding resonant space **208** at an interface angle θ_I determined from a plane parallel to a bottom face **218** and/or a top face **216** of the acoustic core **200**. The partition **402** may include a surface this has an interface angle θ_I that is parallel, oblique, and/or perpendicular relative to the bottom face **218** and/or a top face **216** of a corresponding resonant cell **206** and/or array of resonant cells **206**. As shown in FIGS. **6**A and **6**C, a partition **402** may transect a resonant space **208** with at least a first surface **606** of the partition **402** having an interface angle θ_I that is oblique relative to the bottom face **218** and/or the top face **216**. Additionally, or in the alternative a partition **402** may transect a resonant space **208** with at least a second surface **608** of the partition **402** having an interface angle θ_I that is parallel relative to the bottom face **218** and/or the top face **216**. For example, as shown in FIGS. **6**A and **6**C, a partition may include a first surface **606** that has an interface angle θ_I that is oblique, and a second surface **608** that has an interface angle θ_I that is parallel, relative to the bottom face **218** and/or the top face **216**. In some embodiments, the partition **402** may have a relatively constant cross-sectional thickness, for example, as shown in FIG. **6**B.

In some embodiments, as shown in FIGS. **6**D and **6**E, a partition **402** may include at least one buttress **610** such that the partition **402** has a cross-sectional thickness at a region proximal to one or more of the cell walls **300** that exceeds the cross-sectional thickness of the partition **402** at a region distal to the one or more cell walls. The partition **402** may include a cross-sectional thickness that transitions from a proximal cross-sectional thickness T_1 **612** at an interface with the cell wall **300** to a distal cross-sectional thickness T_2 **614** at a central region of the partition **402**. The partition **402** may have a decreasing cross-sectional thickness from the proximal cross-sectional thickness T_1 **612** at the interface with the cell wall to the distal cross-sectional thickness T_2 **614** at a central region of the partition **402**. As shown, the

partition **402** may include a first surface **606** that has an oblique interface angle θ_I oriented towards the back sheet **204** and/or bottom face **218** of the resonant cell **206**. Additionally, or in the alternative, a partition **402** may include a second surface **608** that has an oblique interface angle θ_I oriented towards the acoustic screen **202** and/or the top face **216**.

In some embodiments, as shown in FIGS. **6**A and **6**C, a partition **402** may include a first surface **606** that has an oblique interface angle θ_I oriented towards the back sheet **204** and/or bottom face **218** of the resonant cell **206** and a second surface **608** that has a parallel interface angle θ_I oriented towards the acoustic screen **202** and/or the top face **216**. Additionally, or in the alternative, as shown in FIG. **6**B, a partition **402** may include a first surface **606** that has an oblique interface angle θ_I oriented towards the back sheet **204** and/or bottom face **218** of the resonant cell **206** and a second surface **608** that has an oblique interface angle θ_I oriented towards the acoustic screen **202** and/or the top face **216**.

As shown in FIG. **6**B, an acoustic screen **202** may be integrally formed with an array of resonant cells **206**. The acoustic screen **202** may interface with one or more cell walls **300** of a resonant cell **206** such that at least one surface of the acoustic screen **202** transects the resonant space **208** at an oblique interface angle θ_I. Additionally, or in the alternative, a back sheet **204** may be integrally-formed with an array of resonant cells **206**. The back sheet **204** may interface with one or more cell walls **300** of a resonant cell **206** such that at least one surface of the back sheet **204** transects the resonant space **208** at an oblique interface angle θ_I.

In some embodiments, an acoustic core that was additively manufactured may include partitioned resonant cells **600** with one or more partitions **402** in which a surface **606** facing the direction of the build plane corresponding to the additive manufacturing process transects the resonant space **208** of the resonant cell **206** at an oblique interface angle θ_I. The oblique interface angle θ_I may facilitate additively manufacturing the partition **402** despite the partition **402** overhanging the resonant space **208** during the additive manufacturing process.

When additively manufacturing an array of resonant cells **206** from the bottom face **218** to the top face **216** (e.g., in a right-side-up orientation), a partition **402** may be integrally formed with one or more cell walls **300**, and the partition **402** may include a surface **606**, oriented towards the bottom face **218**, transecting the resonant space **208** of the resonant cell **206** at an oblique interface angle θ_I, as shown, for example, in FIGS. **6**A and **6**C. In some embodiments, the additively manufactured array of resonant cells **206** may include a partition **402** with a second surface **608**, oriented towards the top face **216**, that transects the resonant space **208** at an oblique interface angle θ_I, as shown, for example, in FIG. **6**B. Additionally, or in the alternative, an array of resonant cells **206** additively manufactured in a right-side-up orientation may include an integrally-formed interface between an acoustic screen **202** and one or more cell walls **300**, with a surface **607** of the acoustic screen **202**, oriented towards the bottom face **218**, that transects the resonant space **208** at an oblique interface angle θ_I.

When additively manufacturing an array of resonant cells **206** from the top face **216** to the bottom face **218** (e.g., in an up-side-down orientation), a partition **402** may be integrally formed with one or more cell walls **300**, and the partition **402** may include a surface **606**, oriented towards the top face **216**, transecting the resonant space **208** of the resonant cell **206** at an oblique interface angle θ_I. In some embodiments, the additively manufactured array of resonant cells **206** may include a partition **402** with a second surface **608**, oriented towards the bottom face **218**, that transects the resonant space **208** at an oblique interface angle θ_I. Additionally, or in the alternative, an array of resonant cells **206** additively manufactured in an up-side-down orientation may include an integrally-formed interface between a back sheet **204** and one or more cell walls, with a surface of the acoustic screen **202**, oriented towards the top face **216**, that transects the resonant space **208** at an oblique interface angle θ_I.

The interface angle θ_I is determined from a plane parallel to a bottom face **218** and/or a top face **216** of the array of resonant cells and/or from a plane parallel to a back sheet **204** and/or an acoustic screen **202** of an acoustic core **200**. The interface angle θ_I may be selected for suitable buildability of overhanging features using an additive manufacturing technology. However, in some embodiments, all of the interfaces between a partition **402** and a cell wall **300** may be perpendicular. For example, with some additive manufacturing processes and/or with some resonant cell configurations, an oblique interface angle θ_I may be unnecessary. Additionally, or in the alternative, in some embodiments an acoustic core **200** may be manufactured using any other suitable process.

As shown in FIG. **6**A, an acoustic screen **202** and/or a back sheet **204** may be attached to the array of resonant cells **206**. Additionally, or in the alternative, as shown in FIGS. **6**B and **6**C, the acoustic screen **202** and/or the back sheet **204** may be at least partially integrally formed with the corresponding one or more cell walls **300** of the resonant cells **206** using an additive manufacturing technology. The acoustic screen **202** and/or the back sheet **204** may be produced using an additive manufacturing technology, with the acoustic screen **202** and/or the back sheet **204** being integrally formed with at least one of the corresponding one or more cell walls **300**. Additionally, or in the alternative, the cell walls **300**, the acoustic screen **202**, and/or the back sheet **204** may be formed using any other suitable technology.

An array of resonant cells **206** may include partitions **402**, an acoustic screen **202**, and/or a back sheet **204**, that transect a resonant space with any desired interface angle θ_I. The slope of a partition **402**, acoustic screen **202**, and/or a back sheet **204** transecting a resonant space **208** may be linear (FIGS. **6**D, **7**A) or curved (FIG. **6**E, **7**B). Various partitions **402** throughout an array of resonant cells **206** may transect respective resonant spaces **208** at respective interface angles θ_I that are uniform or different from one another. Various portions of an acoustic screen **202** and/or back sheet **204** may transect respective resonant spaces **208** at respective interface angles θ_I that are uniform or different from one another.

By way of example, an interface angle θ_I may be from 5 to 90 degrees, such as from such as from 10 to 85 degrees, such as from 20 to 80 degrees, such as from 30 to 80 degrees, such as from 40 to 80 degrees, such as from 50 to 80 degrees, such as from 60 to 80 degrees, such as from 10 to 45 degrees, such as from 45 to 80 degrees, such as from 30 to 60 degrees, or such as from 35 to 50 degrees. The interface angle θ_I may be greater than zero degrees, such as such as at least 5 degrees, such as at least 10 degrees, such as at least 20 degrees, such as at least 30 degrees, such as at least 40 degrees, such as at least 50 degrees, such as at least 60 degrees, such as at least 70 degrees, such as at least 80 degrees. The interface angle θ_I may be less than 90 degrees, such as less than 80 degrees, such as less than 70 degrees, such as less than 60 degrees, such as less than 50 degrees,

such as less than 40 degrees, such as less than 30 degrees, such as less than 20 degrees, such as less than 15 degrees, such as less than 10 degrees, such as less than 5 degrees, or such as less than 1 degrees.

As further shown in FIGS. **6**A-**6**E, in some embodiments a partition **402** may include one or more apertures defining a pathway through the partition **402**, which may sometimes be referred to as a partition-aperture **616**. An array of resonant cells **206** may include at least some resonant cells **206** that have a partition **402**, and at least some of the partitions **402** may include one or more partition-apertures **616** defining a pathway between an upper resonant space **602** and a lower resonant space **604**. The one or more partition-apertures **616** may be formed in the partition **402** during the additive manufacturing process by leaving areas of unsolidified build material at selected locations of the partition **402**. Generally, when additively manufacturing the partitions **402**, build material will be solidified in a manner that propagates from the cell walls **300** inward such that the partition **402** is cantilevered from the cell wall **300**. The one or more partition-apertures **616** may be configured and arranged in a manner that allows the partition **402** to be sufficiently supported by the cell walls **300**. Partitions **402** may be formed in this manner with partition-apertures **616** that have various configurations and arrangements.

Further exemplary partitions **402** with partition-apertures **616** are shown in FIGS. **7**A-**7**D, **8**A-**8**D, and **9**A-**9**F. In some embodiments, a partition **402** may include a single partition-aperture **616**. Additionally, or in the alternative, a partition **402** may include a plurality of partition-apertures **616**. A partition-aperture **616** may be centered between the cell walls **300** of a resonant cell **206**, as shown in FIGS. **7**A-**7**D. Additionally, or in the alternative, a partition-aperture **616** may be offset relative to the center point of the resonant cell **206**, as shown in FIGS. **8**A-**8**D. The partition **402** may include a single partition-aperture **616**, as shown for example in FIGS. **7**A-**7**D and FIGS. **8**A and **8**B, or a plurality of partition-apertures **616**, as shown for example in FIGS. **8**C and **8**D, and FIGS. **9**A-**9**F. As compared to a partition-aperture **616** that is centered on the partition **402**, a partition-aperture **616** that is offset on the partition **402** may reduce build material while maintaining suitable buildability of overhanging features using an additive manufacturing technology. Additionally, or in the alternative, as compared to a partition-aperture **616** that is centered on the partition **402**, a partition-aperture **616** that is offset on the partition **402** may increase wave propagation distance, which may enhance attenuation of low frequency sound waves as described above with reference to FIGS. **4**A and **4**B and FIG. **5**.

As shown in FIG. **7**A, a partition **402** may have a partition-aperture **616** situated at a midward location of the partition **402**, such as at the center of the partition **402**. As shown in FIGS. **7**B and **7**C, a partition **402** may have a partition-aperture **616** configured and arranged in the form of a plurality of slots or grooves defined by respective portions of the partition **402** cantilevered from one or more of the cell walls **300**. FIG. **7**D shows an exemplary cross-sectional view of the partition-aperture **616** of FIG. **7**A, **7**B, or **7**C, illustrating the cantilevered portions of the partition **402**.

As shown in FIGS. **9**A-**9**F, a partition **402** may include a plurality of partition-apertures **616**. Any number of partition-apertures **616** may be provided in a partition **402** by carefully selecting a configuration and arrangement that allows the partition **402** to be adequately supported by the cell walls **300**. For example, as shown in FIGS. **7**B and **7**C, and FIGS. **9**A and **9**B, a partition **402** may include a plurality of cantilevered portions **618** that extend from adjacent cell walls **300**. The cantilevered portions **618** may unite with one another at a midward location of the partition **402**. Additionally, or in the alternative, a partition **402** may include a partition-aperture array **620** defining an array of pathways, as shown, for example in FIGS. **9**C and **9**D, FIGS. **9**E and **9**F. The partition-aperture array **620** may have partition-apertures **616** configured and arranged with a uniform pattern or spacing, as shown for example in FIGS. **9**C and **9**D. Additionally, or in the alternative, the partition-aperture array **620** may have partition-apertures **616** configured and arranged with plurality of shapes and/or sizes, as shown for example in FIGS. **9**E and **9**F.

Now turning to FIGS. **10**A-**10**D, in some embodiments, an array of resonant cells **206** may include one or more apertures **404** defining a pathway through a cell wall **300**. Such an aperture **404** may sometimes be referred to as a wall-aperture **1000**. In various embodiments, a wall-aperture **1000** may span all or a portion of a cell wall **300**, as shown for example in FIG. **10**B. As shown, one or more cell walls **300** or portions thereof may define the perimeter of a wall-aperture **1000**. Additionally, or in the alternative, the wall-aperture may include one or more aperture walls **1002**, as shown for example in FIGS. **10**C and **10**D. The one or more aperture walls **1002** may define a plurality of wall-apertures **1000** therebetween. The one or more aperture walls **1002** may be integrally formed with adjacent cell walls **300** using an additive manufacturing technology and/or any other suitable technology. Any number of wall-apertures **1000** may be provided in a cell wall **300** and/or between aperture walls **1002** by carefully selecting a configuration and arrangement that allows the aperture wall **1002** to be adequately supported, and for the aperture wall **1002** to adequately support the cell wall **300**. The aperture walls **1002** and corresponding wall-apertures **1000** may be provided with various configurations and arrangements, including, without limitation, the apertures **404** described above with reference to partition-apertures **616**.

A wall-aperture adjoining the respective resonant spaces of resonant cells (coupled resonant cells), may be configured as a reduced-frequency resonant cell. In exemplary embodiments, a wall-aperture **1000** may be positioned at an offset location in the cell wall **300** similarly to offset partition-apertures **616**, as described above with reference to FIGS. **4**A and **4**B, and FIG. **5**. For example, a wall-aperture **1000** may be located at an offset position in a cell wall **300**, such as proximal to the bottom face **218** and/or proximal to the back sheet **204**, as shown in FIGS. **10**A-**10**D. The target resonant frequency for the coupled resonant cells may also be selected based at least in part on the size of the wall-aperture **1000** according to the aperture reduction factor relationship: $a=c\ (1-\beta)$.

FIG. **11** shows several further exemplary configurations and arrangements of apertures **404**, any one or more of which may be incorporated into a partition **402**, a cell wall **300**, and/or aperture wall **1002**. As shown, exemplary embodiments may include apertures **404** with polyhedral and/or elliptical cross-sectional shapes. For example, embodiments (a), (c), and (e) include polyhedral apertures **404**, and embodiment (b), (d), and (f) include elliptical apertures **404**. More particularly, embodiment (e) includes rectangular apertures **404**; embodiment (a) includes teardrop apertures **404**; embodiment (c) include hexagonal apertures **404**; embodiments (b) and (c) include elongate apertures **404**; and embodiments (d) and (f) include circular apertures **404**. It will be appreciated that combinations of polyhedral

and/or elliptical path apertures **404** are also within the scope of the present disclosure. In some embodiments, the apertures **404** may be oriented in an array, or a staggered array. For example, as shown with the embodiment (d), adjacent apertures **404** may be oriented in a perpendicular direction of unequal distance from one another. The apertures **404** may be arranged in any desired orientation about a partition **402**, a cell wall **300**, and/or aperture wall **1002**, including an ordered or random or semi-random orientation.

Now turning to FIGS. **12**A and **12**B, exemplary resonant cell groups **1200** will be described. As shown, a resonant cell group may include at least one coupled resonant cell **1202** matched or grouped with one or more complementary resonant cells **206**, such as a high-frequency resonant cell and/or an intermediate-frequency resonant cell. The coupled resonant cell **1202** and/or the complementary resonant cells **206** of a resonant cell group **1200** may be configured as reduced-frequency resonant cells. As shown, coupled resonant cells **1202** may include at least one cell wall **300** that has one or more apertures **404** (e.g., wall-apertures **1000**) defining a pathway between an antecedent resonant space **1204** and a subsequent resonant space **1206**. The antecedent resonant space **1204** and the subsequent resonant space **1206** may sometimes be referred to collectively as a coupled resonant space **1208**. In some embodiments, the coupled resonant space **1208** may exhibit a relatively low resonant frequency. A coupled resonant cell **1202** may be configured to attenuate any desired resonant frequency. In exemplary embodiments, a coupled resonant cell **1202** may be configured to attenuate a relatively low resonant frequency. A coupled resonant cell **1202** may be configured as a low-frequency resonant cell. A coupled resonant cell **1202** may have a resonant length that exceeds the height or axial length of the coupled resonant cell **1202** and/or the height of the acoustic core **200** that includes the coupled resonant cell **1202**.

As shown in FIGS. **12**A and **12**B, in some embodiments, coupled resonant cells **1202** may include a partition **402** transecting at least a portion of a resonant space **208**. For example, a partition **402** may delineate an upper resonant space **602** from a lower resonant space **604**. The lower resonant space **604** may define at least a portion of the coupled resonant space **1208**. The upper resonant space **602** may exhibit a relatively high resonant frequency. The lower resonant space **604** and/or the coupled resonant space **1208** may exhibit a relatively low resonant frequency. As shown in FIG. **12**A, in some embodiments, a resonant cell group **1200** may include a coupled resonant space **1208** grouped or matched with a resonant space **208** that has a relatively high resonant frequency, such as an upper resonant space **602** on an opposite side of a partition **402**. Additionally, or in the alternative, as shown in FIG. **12**B, a resonant cell group **1200** may include one or more intermediate-frequency resonant cells **1210** respectively defining an intermediate resonant space **1212**. As shown, an intermediate-frequency resonant cell may be at least partially adjacent to and/or at least partially surrounded by at least one coupled resonant cell **1202**. An intermediate-frequency resonant cell may share one or more cell walls **300** with an antecedent resonant space **1204** and/or a subsequent resonant space of a coupled resonant cell **1202**. An intermediate-frequency resonant cell may exhibit a relatively intermediate resonant frequency. When a resonant cell group **1200** includes an intermediate-frequency resonant cell **1210**, a coupled resonant space **1208** may include a medial resonant space **1214** disposed between the antecedent resonant space **1204** and the subsequent resonant space **1206**. For example, as shown in FIG. **12**B, the medial resonant space **1214** may be proximal to the bottom face **218** of an array of resonant cells **206**, such as between the intermediate-frequency resonant cell **1210** and the back sheet **204** of an acoustic core **200**. As shown in FIG. **12**B, the pathway between the antecedent resonant space **1204** and the subsequent resonant space **1206** may transect an intermediate-frequency resonant cell **1210**. The intermediate-frequency resonant cell **1210** may include a partition **402** separating the pathway from the intermediate resonant space **1212**. The partition **402** separating the pathway from the intermediate resonant space **1212** may delineate the medial resonant space **1214**, and the medial resonant space **1214** may define at least part of the pathway between the antecedent resonant space **1204** and the subsequent resonant space **1206**. In some embodiments, the partition **402** may be perpendicular to one or more cell walls **300** of the resonant cell group **1200**.

As shown, for example, in FIG. **12**A, the longitudinal axis, A, of a coupled resonant cell **1202** follows a path equidistant from and locally normal to the cell walls **300** defining the antecedent resonant space **1204** and the subsequent resonant space **1206** of the coupled resonant cell **1202**. As shown, for example, in FIG. **12**B, the axial length, L, of a coupled resonant cell **1202** may extend from a top face **216** delimiting the antecedent resonant space **1204** to a partition **402** delimiting the subsequent resonant space **1206**, along the longitudinal axis, A, equidistant from and locally normal to the respective cell walls **300**. In exemplary embodiments, a cross-sectional dimension "a" of a wall-aperture **1000** defining a pathway between the antecedent resonant space **1204** and the subsequent resonant space **1206** may be less than a cross-sectional dimension "c_1" of the antecedent resonant space **1204**. Additionally, or in the alternative, the cross-sectional dimension "a" of the wall-aperture **1000** may be less than a cross-sectional dimension "c_2" of the subsequent resonant space **1206**. The cross-sectional dimension "c_1" of the antecedent resonant space **1204** and/or the cross-sectional dimension "c_2" of the subsequent resonant space **1206** may be determined adjacent to the more wall-aperture **1000**. As shown in FIG. **12**B, when the resonant cell group **1200** includes an intermediate-frequency resonant cell **1210**, the corresponding coupled resonant cell **1202** may include a medial resonant space **1214**.

The cross-sectional dimension "a_1" of the wall-aperture **1000** and/or the medial resonant space **1214** adjacent to the antecedent resonant space **1204** may be less than a cross-sectional dimension "c_1" of the antecedent resonant space **1204**. Additionally, or in the alternative, the cross-sectional dimension "a_2" of the wall-aperture **1000** and/or the medial resonant space **1214** adjacent to the subsequent resonant space **1206** may be less than a cross-sectional dimension "c_2" of the subsequent resonant space **1206**.

The cross-sectional dimension of one or more wall-apertures **1000** defining a pathway between an antecedent resonant space **1204** and a subsequent resonant space **1206** may be determined based at least in part on an aperture reduction factor β. Additionally, or in the alternative, a cross-sectional dimension "c_1" of the antecedent resonant space **1204** and/or a cross-sectional dimension "c_2" of the subsequent resonant space **1206** may be determined based at least in part on an aperture reduction factor β. The aperture reduction factor β may be determined based at least in part on a relationship between the aperture reduction factor β and the resonant frequency of the resonant cell.

Now turning to FIGS. **13**A-**13**H, in some embodiments an array of resonant cells **206** may include oblique resonant cells **1300**. Additionally, or in the alternative, a resonant cell

group **1200** may include oblique resonant cells **1300**. The oblique resonant cells **1300** may include at least one surface oriented obliquely relative to the top face **216** and/or the bottom face **218**. Additionally, or in the alternative, the oblique resonant cells **1300** may include at least one surface may be oriented perpendicularly relative to the top face **216** and/or the bottom face **218**. The oblique resonant cells **1300** may be configured as reduced-frequency resonant cells. In some embodiments, as shown in FIGS. **13**A-**13**H, oblique resonant cells **1300** may provide for a longer resonant length for a given acoustic core **200** height as compared to resonant cells **206** with cell walls **300** that are oriented perpendicularly or radially relative to the bottom face **218** or top face **216** of the acoustic core **200**. An oblique resonant cell **1300** may be configured as low-frequency resonant cell. An oblique resonant cell **1300** may exhibit a resonant length that exceeds the height or axial length of the oblique resonant cell **1300** and/or the height of the acoustic core **200** that includes the oblique resonant cell **1300**. FIGS. **13**A-**13**H show the longitudinal axis, A, of the antecedent resonant space **1204**. The longitudinal axis, A, of the coupled resonant space **1208** would extend through both the antecedent resonant space **1204** and the coupled resonant space **1208**, as shown, for example in FIG. **12**A.

As shown, for example, in FIGS. **13**A and **13**B, oblique resonant cells **1300** may be configured and arranged as coupled resonant cells **1202**, providing a coupled resonant space **1208** with a relatively lower resonant frequency. As shown, a coupled resonant space **1208** may be transected by a partition **402**. The partition **402** transecting the coupled resonant space **1208** may delineate a high-frequency resonant cell **1302** that defines a high-frequency resonant space **1304**. A resonant cell group **1200** may include the coupled resonant cell **1202** grouped or matched with the high-frequency resonant cell **1302**. In some embodiments, as shown in FIG. **13**B, the partition **402** may include one or more partition-apertures **616** defining a pathway between the coupled resonant space **1208** and the high-frequency resonant space **1304**, allowing acoustic interaction between therebetween.

In some embodiments, a partition **402** may be perpendicular to one or more cell walls **300** of the resonant cell group **1200**. For example, a partition **402** may be perpendicular to one or more cell walls **300** of the oblique resonant cells **1300**. Additionally, or in the alternative, a partition **402** may be perpendicular to a cell wall **300** of a resonant cell **206** that is oriented obliquely relative to the longitudinal axis, A, of the resonant space **208** at a cell angle θ_C. For example, the partition **402** may be perpendicular to a cell wall **300** that has a cell angle θ_C of from 5 to 90 degrees, such as from such as from 10 to 85 degrees, such as from 20 to 80 degrees, such as from 30 to 80 degrees, such as from 40 to 80 degrees, such as from 50 to 80 degrees, such as from 60 to 80 degrees, such as from 10 to 45 degrees, such as from 45 to 80 degrees, such as from 30 to 60 degrees, or such as from 35 to 50 degrees. The cell angle θ_C may be greater than zero degrees, such as such as at least 5 degrees, such as at least 10 degrees, such as at least 20 degrees, such as at least 30 degrees, such as at least 40 degrees, such as at least 50 degrees, such as at least 60 degrees, such as at least 70 degrees, such as at least 80 degrees. The cell angle θ_C may be less than 90 degrees, such as less than 80 degrees, such as less than 70 degrees, such as less than 60 degrees, such as less than 50 degrees, such as less than 40 degrees, such as less than 30 degrees, such as less than 20 degrees, such as less than 15 degrees, such as less than 10 degrees, such as less than 5 degrees, or such as less than 1 degrees. By comparison, perpendicular resonant cells have a cell angle θ_C of 90 degrees.

As shown in FIGS. **13**C-**13**F, in some embodiments, an array of resonant cells **206** may include one or more coupled resonant cells **1202** matched with one or more intermediate-frequency resonant cells **1210** and/or one or more high-frequency resonant cells **1302**. The intermediate-frequency resonant cell **1210** may include a partition **402** separating the pathway **1305** from the intermediate resonant space **1212**. An intermediate-frequency resonant cell **1210** may define an intermediate resonant space **1212**, and a high-frequency resonant cell **1302** may define a high-frequency resonant space **1304**. The intermediate resonant space **1212** may have a resonant frequency that is greater than the resonant frequency of the coupled resonant space **1208** and/or less than the resonant frequency of a high-frequency resonant space **1304**. In some embodiments, as shown, for example, in FIGS. **13**D and **13**E, an intermediate-frequency resonant cell **1210** may include a partition **402** delineating an upper resonant space **602** from a lower resonant space **604**. As shown in FIG. **13**D, the partition **402** may include one or more partition-apertures **616** defining a pathway between the upper resonant space **602** and the lower resonant space **604**.

In some embodiments, as shown, for example, in FIG. **13**F, a plurality of coupled resonant cells **1202** may define respective ones of a plurality of antecedent resonant spaces **1204** that converge into a subsequent resonant space **1206**. For example, a first wall-aperture **1000** may define a pathway between a first antecedent resonant space **1204** and a subsequent resonant space, and a second wall-aperture **1000** may define a pathway between a second antecedent resonant space **1204** and the subsequent resonant space **1206**.

Now turning to FIGS. **13**G and **13**H, in some embodiments, a resonant cell group **1200** may include one or more converging resonant cells **1306** and/or one or more diverging resonant cell **1308**. A converging resonant cell includes one or more cell walls **300** that converge with one another such that the top face **216** of the resonant cell **206** has a larger cross-sectional area than the bottom face **218** of the resonant cell. A diverging resonant cell **1308** includes one or more cell walls **300** that diverge relative to one another such that the top face **216** of the resonant cell has a smaller cross-sectional area than the bottom face **218** of the resonant cell **206**. Converging resonant cells **1306** and/or diverging resonant cells **1308** may be described by a convergence ratio, which refers to a ratio of the cross-sectional area of the top face **216** of the resonant cell **206** to the cross-sectional area of the bottom face **218** of the resonant cell **206**. Converging resonant cells **1306** have a convergence ratio greater than 1.0, and diverging resonant cells **1308** have a diverging ratio of less than 1.0. In some embodiments, the resonant frequency of a resonant cell **206** may depend at least in part on the convergence ratio of the resonant cell **206**. The convergence ratio for a resonant cell **206** may be selected based at least in part on a desired resonant frequency resulting from the convergence ratio. Additionally, or in the alternative, in some embodiments, a convergence ratio may be selected based at least in part on a desired curvature of a resonant cell **206**, resonant cell group **1200**, and/or acoustic core **200** resulting from the convergence ratio, such as in the case of a curved or complexly curved acoustic core **200**. For example, a curved acoustic liner **100** (see, e.g., FIG. **1**A) may include an acoustic core **200** with at least some converging resonant cells **1306** and/or at least some diverging resonant cells **1308**. Additionally, or in the alternative, converging resonant cells **1306** and/or diverging resonant

cells **1308** may have a cell angle θ_C selected based at least in part on a desired resonant frequency resulting from the cell angle θ_C and/or based at least in part on desired curvature of a resonant cell **206**, resonant cell group **1200**, and/or acoustic core **200** resulting from the convergence ratio. The resonant frequency of a resonant cell **206** may depend on a combination of the convergence ratio and cell angle θ_C.

As shown in FIG. **13**G, in some embodiments, a resonant cell group **1200** may include one or more intermediate-frequency resonant cells **1210** situated between coupled resonant cells **1202**. In some embodiments, an intermediate-frequency resonant cell **1210** may have one or more cell walls **300** that converge and/or adjoin with one another. For example, as shown in FIG. **13**G, one or more cell walls **300** may adjoin at an aperture wall **1002** defining a wall-aperture **1000**.

It will be appreciated that any combination of resonant cells **206** may be provided that include any one or more of the features described herein as well as combinations thereof. For example, any combination of complementary resonant cells **206** may be provided in accordance with the present disclosure, including any combination of high-frequency resonant cells **1302**, intermediate-frequency resonant cells **1210**, and/or low-frequency resonant cells (e.g., coupled resonant cells **1202**, oblique resonant cells **1300**, etc.). Additionally, coupled resonant cells **1202** and oblique resonant cells **1300** may include any combination of high-frequency resonant cells **1302**, intermediate-frequency resonant cells **1210**, and/or low-frequency resonant cells. In some embodiments, a resonant cell group **1200** may include two, three, four, five, or more resonant cells **206** with configurations that differ from one another. Additionally, or in the alternative, a resonant cell group **1200** may include a plurality of resonant cell subgroups. For example, a first subgroup may include first group of complementary resonant cells, and a second group of complimentary resonant cells, in which the first group of complementary resonant cells is complementary to the second group of complementary resonant cells. By way of example, the first group of complementary resonant cells may include a high-frequency resonant cell **1302**, an intermediate-frequency resonant cell **1210**, and/or a low-frequency resonant cell (e.g., a coupled resonant cell **1202**, an oblique resonant cell **1300**, etc.) that are respectively matched or grouped with one another so as to define first a resonant cell group, or a first resonant cell subgroup. The second group of complementary resonant cells may include a high-frequency resonant cell **1302**, an intermediate-frequency resonant cell **1210**, and/or a low-frequency resonant cell e.g., a coupled resonant cell **1202**, an oblique resonant cell **1300**, etc.) that are respectively matched or grouped with one another so as to define second a resonant cell group, or a second resonant cell subgroup. At least some of the resonant cells in the first resonant cell group or subgroup may differ from the corresponding resonant cells in the second resonant cell group or subgroup. For example, a first high-frequency resonant cell **1302** in the first resonant cell group or subgroup may differ from a second high-frequency resonant cell **1302** in the second resonant cell group or subgroup, and/or a first intermediate-frequency resonant cell **1210** in the first resonant cell group or subgroup may differ from a second intermediate-frequency resonant cell **1210** in the second resonant cell group or subgroup, and/or a first low-frequency resonant cell in the first resonant cell group or subgroup may differ from a second low-frequency resonant cell in the second resonant cell group or subgroup. Accordingly, a resonant cell group **1200** may include any combination of resonant cells **206** that provides a desired acoustic treatment.

Now turning to FIGS. **14**A-**14**C, exemplary configurations for an array of resonant cells **206** will be further described. When additively manufacturing an array of resonant cells **206**, manufacturability and/or build quality may be enhanced in some embodiments by configuring resonant cells **206**, cell walls **300**, and/or partitions **402** that are aligned with one another such that contour paths followed by an additive manufacturing energy beam and/or additive manufacturing tool extend across at least some adjacent resonant cells **206**. For example, an array of resonant cells **206** may include one or more cell walls **300** that are aligned along a linear or curvilinear trajectory that extends across a plurality of resonant cells **206**. Additionally, or in the alternative, an array of resonant cells may include one or more partitions **402** that are aligned along a linear or curvilinear trajectory that extends across a plurality of resonant cells **206**. Such alignment may allow the additive manufacturing energy beam and/or tool to maintain continuous operation while traversing adjacent cell walls **300** and/or adjacent partitions **402**. Such continuous operation may provide for improved integration between adjacent cell walls **300**, between adjacent partitions **402**, and/or between cell walls **300** and partitions **402**. Additionally, such alignment may allow for decreased manufacturing time by reducing transition times between separated contour paths. However, such alignment between resonant cells **206**, cell walls **300**, and/or partitions **402** is described by way of example and not to be limiting. In fact, other configurations and operating methods are contemplated, including partitions **402** and/or cell walls **300** with staggered, patterned, or random orientations.

By way of example, FIGS. **14**A-**14**F show top views of exemplary arrays of resonant cells **206**. As shown, exemplary resonant cells **206** may be aligned with one another in the x-direction and/or in the y-direction. Such alignment of resonant cells **206** may allow for the cell walls **300** of adjacent resonant cells **206** to be integrally formed with one another, such as with interconnected contours. For example, a continuous cell wall **300** may extend across a plurality of resonant cells **206**. The cell walls **300** may exhibit a linear cross-section (FIGS. **14**A-**14**C) or curvilinear cross-section (FIGS. **14**D-**14**F). The cross-section of a cell wall **300** may be determined along a curve parallel to the top face **216** and/or the bottom face **218** of the resonant cell. The cell walls **300** may form a grid, with resonant cells **206** having a uniform cross-sectional area (FIGS. **14**A, **14**D) or non-uniform cross-sectional area (FIGS. **14**B, **14**C, **14**E, **14**F). The cross-sectional area of at least some of the resonant cells **206** in an array of may include a partition **402**. The resonant cells **206** that include a partition **402** may be staggered or offset relative to one another in the x-direction and/or the y-direction. For example, FIG. **14**A shows a plurality of partitioned resonant cells **600** that are staggered or offset relative to one another. As shown, the partitioned resonant cells **600** may include a first partitioned resonant cell **1400** staggered or offset from a second partitioned resonant cell **1402** by at least one adjacent resonant cell **206**. The stagger or offset may form a pattern, such as an alternating pattern.

Additionally, or in the alternative, at least some of the partitioned resonant cells **600** may be aligned with one another in the x-direction and/or the y-direction. For example, FIGS. **14**B-**14**F respectively show an exemplary array of resonant cells **206** that includes a plurality of partitioned resonant cells **600** that are aligned with one another. As shown, the partitioned resonant cells **600** may include a third partitioned resonant cell **1404** aligned with a

fourth partitioned resonant cell **1406**. By way of example, the partitioned resonant cells **600** may be aligned in rows or columns.

In some embodiments, as shown, for example, in FIG. **14**C, an array of resonant cells **206** may include a first plurality of partitioned resonant cells **1408** that are staggered or offset from a second plurality of partitioned resonant cells **1410**. The first plurality of partitioned resonant cells **1408** may follow an irregular path, and/or the second plurality of partitioned resonant cells **1410** may follow an irregular path.

Referring now to FIGS. **15**A-**15**D, side cross-sectional views of exemplary arrays of resonant cells **206** are shown. As shown, an array of resonant cells **206** may include partitioned resonant cells **600** aligned with one another in the z-direction (e.g., FIG. **15**A) and/or partitioned resonant cells **600** staggered relative to one another in the z-direction (e.g., FIG. **15**B). In some embodiments, the partitioned resonant cells **600** shown in FIGS. **15**A-**15**D may include apertures **404**, including partition-apertures **616** and/or wall-apertures **1000**. When at least partially aligned in the z-direction, the partitions **402** and cell walls **300** may be integrally formed with one another, such as with interconnected contours. Such z-directional alignment may allow for uninterrupted contour paths across adjacent partitions **402** and/or across adjacent cell walls **300**, which may provide for sufficient integration between adjacent cell walls **300**, between cell walls **300** and partitions **402**, and/or between adjacent partitions **402**. Additionally, such alignment may allow for decreased manufacturing time by reducing transition times between separated contour paths, as well as improved integration between cell walls and partitions.

The z-directional location of a partition **402** may be selected, for example, to tune the corresponding resonant space to a desired resonant frequency. As shown in FIG. **15**A, a plurality of partitioned resonant cells **600** may have partitions **402** located at least in part at a common z-directional position, such that the plurality of partitioned resonant cells **600** may be tuned to a common resonant frequency. Additionally, or in the alternative, as shown in FIG. **15**B, a plurality of partitioned resonant cells **600** may have partitions **402** respectively located at a plurality of different z-directional positions. For example, an array of resonant cells **206** may include a first partitioned resonant cell **600** with a partition **402** located at a first z-directional position, and a second partitioned resonant cell **600** with a partition **402** located at a second z-directional position. The first partitioned resonant cell **600** may be tuned to a first resonant frequency, and the second partitioned resonant cell **600** may be tuned to a second resonant frequency. For example, the resonant frequency of the first partitioned resonant cell **600** and/or the resonant frequency of the second partitioned resonant cell **600**, may be tuned at least in part by selecting a z-directional location of the respective partition **402**. Additionally, or in the alternative, the resonant frequency may be tuned at least in part by selectively configuring the dimensions of the respective resonant cell **206**, partition **402**, and/or aperture(s) **404**, including by selecting a desired aperture reduction factor β. A plurality of partitioned resonant cells **600** may be tuned to a desired resonant frequency. Additionally, or in the alternative, an array of resonant cells **206** may include plurality of groups of partitioned resonant cells **600** respectively tuned to a desired resonant frequency.

In some embodiments, as shown in FIGS. **15**C and **15**D, an array of resonant cells **206** may include a plurality of partitioned resonant cells **600** with respective partitions **402** that transects the corresponding resonant space **208** at an interface angle θ_I. The partitions **402** may be aligned with one another, such that the partitions **402** extend across a plurality of partitioned resonant cells **600** that are adjacent to one another. The partitions **402** may follow a linear or curvilinear trajectory across the plurality of partitioned resonant cells **600**. The interface angle θ_I may be selected for suitable buildability of overhanging features using an additive manufacturing technology. In some embodiments, by orienting the partitions **402** at a suitable interface angle θ_I, the partitions **402** may be provided without a buttress **610**, thereby saving weight and/or reducing build time. By way of comparison, FIGS. **15**A and **15**B show partitions **402** that include a buttress **610**, providing a generally horizontal surface oriented relative to the top face **216**. FIGS. **15**C and **15**D show partitions **402** without a buttress **610**, providing a sloped partition **402** oriented obliquely relative to the top face **216** and the bottom face **218**. A partition **402** that does not include a buttress **610** may be recognized, for example, when the partition **402** has a substantially uniform cross-sectional thickness as between a region proximal to one or more of the cell walls **300** and a region distal to the one or more cell walls. For example, a substantially uniform cross-sectional thickness may include dimensions that are identical, or that differ from one another by 10% or less, such as 5% or less, or such as 1% or less.

Referring now to FIGS. **16**A and **16**B, and FIGS. **17**A through **17**D, exemplary acoustic liners **100** and acoustic cores **200** will be further described. As shown in FIGS. **16**A and **16**B, an acoustic liner **100** may have a curvilinear profile. Additionally, or in the alternative, an acoustic core **200** may have a curvilinear profile. The curvilinear profile of an acoustic liner **100** and/or of an acoustic core **200** may be configured to at least partially surround a noise source, such as fan blades **110** of a turbomachine **102**. For example, an acoustic liner **100** and/or of an acoustic core **200** with a curvilinear profile may conform to at least a portion of a housing or a nacelle **104**, such a fan casing portion **122** and/or a transcowl portion **124** of a nacelle **104**. An acoustic core **200** and/or an acoustic liner **100** may be formed with a curvilinear profile using tooling that provides a desired curvature. Additionally, or in the alternative, an acoustic core **200** and/or an acoustic liner **100** may be formed with a first profile, and then subsequently pressed or formed to take on a second profile. For example, the first profile may be planar and the second profile may be curvilinear, or the first profile may have a first curvilinear profile, and the second profile may have a second curvilinear profile.

An acoustic core **200** with a curvilinear profile may include perpendicular resonant cells and/or oblique resonant cells. In some embodiments, the resonant cells **206** in the acoustic core shown in FIG. **16**A may include perpendicular resonant cells **206**, for example, with a resonant space **208** that has a longitudinal axis, A, oriented perpendicular at least relative to the cross-section shown. The resonant cells **206** in the acoustic core shown in FIG. **16**B may include oblique resonant cells **206**. As shown in FIG. **16**B, the resonant cells **206** have a resonant space **208** with longitudinal axis with an oblique orientation relative to the cross-section shown. Additionally, or in the alternative, the resonant cells **206** in the acoustic core shown in FIG. **16**A may include oblique resonant cells **206**. For example, the resonant cells **206** shown in FIG. **16**A may have a resonant space **208** with a longitudinal axis, A, that has an oblique orientation transverse to the cross-section shown. In some embodiments, at least some of the oblique resonant cells **206** may have a longitudinal axis with an oblique orientation at least partially aligned with a direction of fluid flow. For example, at least some of the resonant cells **206** may be tilted

in a direction of fluid flow and/or at least some of the resonant cells **206** may be tilted against a direction of fluid flow. Additionally, or in the alternative, at least some of the oblique resonant cells **206** may have a longitudinal axis with an oblique orientation at least partially transverse to a direction of fluid flow. For example, at least some of the resonant cells may be tilted in a direction transverse to a direction of fluid flow, such as crossways relative to a direction of fluid flow.

FIGS. **17**A and **17**C show exemplary resonant cell groups **1200** that may be included in the acoustic core **200** shown in FIG. **16**A. FIGS. **17**B and **17**D show exemplary resonant cell groups **1200** that may be included in the acoustic core **200** shown in FIG. **16**B. An acoustic core **200** that includes exemplary resonant cell groups **1200** configured as shown in FIGS. **17**A, **17**B, **17**C, and/or **17**D may be provided in an acoustic liner **100** configured and arranged such that fluid flows across the top face **216** in any desired direction. For example, as shown in FIGS. **17**A-**17**D, fluid may flow across the top face **216** from left to right, from right to left, into the page, out of the page, and so forth. In some embodiments, as shown in FIGS. **17**A-**17**D, an acoustic core **200** may include an array of resonant cells **206** that includes a plurality of resonant cell groups **1200**. Respective ones of the plurality of resonant cell groups may include one or more converging resonant cells **1306** and/or one or more diverging resonant cell **1308**. A resonant cell group **1200** may include at least one converging resonant cell **1306** and/or at least one diverging resonant cell **1308**. The resonant cell group **1200** may include one or more oblique resonant cells **1300** configured as a converging resonant cell **1306** and/or one or more oblique resonant cells **1300** configured as a diverging resonant cell **1308**.

In some embodiments, a resonant cell group **1200** that includes a resonant space delimited by a partition **402** may be configured at least in part as a converging resonant cell **1306** and/or at least in part as a diverging resonant cell **1308**. An upper resonant space **602** may be defined at least in part by a converging resonant cell **1306** and/or a lower resonant space **604** may be defined at least in part by a diverging resonant cell **1308**. In some embodiments, resonant cells **206** that do not include a partition that divides a resonant space into an upper resonant space **602** and a lower resonant space **604** may be configured as a converging resonant cell **1306** or as a diverging resonant cell **1308**.

In some embodiments, as shown, for example, in FIGS. **16**A and **16**B, an acoustic core **200** may include diverging resonant cells **1308** delimited by a top face **216** and a bottom face **218** at locations where the acoustic core **200** has a convex a curvilinear profile, such as in the case of an acoustic core **200** configured to fit a radially inward curved surface, such as a radially inward side of a nacelle. Additionally, or in the alternative, as shown, for example, in FIG. **16**C, an acoustic core **200** may include converging resonant cells **1306** delimited by a top face **216** and a bottom face **218** at locations where the acoustic core **200** has a concave curvilinear profile, such as in the case of an acoustic core configured to fit a radially outward curved surface, such as a radially outward side of a housing or nacelle. In some embodiments, at least a portion of an acoustic core **200** may have a concave curvilinear profile and at least a portion of the acoustic core may have a convex curvilinear profile. Additionally, or in the alternative, resonant cells **206** that include a partition **402** may be configured at least in part as a converging resonant cell **1306** and/or at least in part as a diverging resonant cell **1308**. In some embodiments, an upper resonant space **602** may be defined at least in part by a converging resonant cell **1306**, and a lower resonant space **604** may be defined at least in part by a diverging resonant cell **1308**.

As shown in FIG. **17**A-**17**D, the at least one converging resonant cell **1306** in the resonant cell group **1200** may be defined at least in part by a top face **216**. Additionally, or in the alternative, the at least one converging resonant cell **1306** may be defined at least in part by a partition **402**. A first surface **606** of the partition **402** may be oriented towards the converging resonant cell **1306**. The partition **402** may transect at least a portion of a resonant space **208** of a resonant cell **206**. The at least one converging resonant cell **1306** may define an upper resonant space **602**, and the partition **402** may delineate the upper resonant space **602** from a lower resonant space **604**. In some embodiments, the at least one converging resonant cell **1306** may be a high-frequency resonant cell **1302** that defines a high-frequency resonant space **1304**.

The at least one diverging resonant cell **1308** may be defined at least in part by bottom face **218**. Additionally, or in the alternative, the at least one diverging resonant cell **1308** may be defined at least in part by a top face **216** and/or a partition **402**. For example, a diverging resonant cell may be defined at least in part by a top face **216** and a bottom face **218**. Additionally, or in the alternative, a diverging resonant cell may be defined at least in part by a partition **402** and a bottom face **218**. A second surface **608** of the partition **402** may be oriented towards the diverging resonant cell **1308**. The partition **402** may transect at least a portion of a resonant space **208** of a resonant cell **206**. The at least one diverging resonant cell **1308** may define a lower resonant space **604**, and the partition **402** may delineate the lower resonant space **604** from an upper resonant space **602**. In some embodiments, the partition **402** may separate a converging resonant cell **1306** from a diverging resonant cell **1308**.

In some embodiments, a resonant cell group **1200** may include a coupled resonant cell **1202** at least partially configured as a diverging resonant cell **1308**. The diverging coupled resonant cell **1202** may be configured as an oblique resonant cell **1300**. A coupled resonant cell **1202** may include a diverging antecedent resonant space **1204** and/or a diverging subsequent resonant space **1206**. Additionally, or in the alternative, at least a portion of the coupled resonant space **1208**, including the antecedent resonant space **1204** and the subsequent resonant space **1206**, may have a diverging configuration. For example, the entire coupled resonant space **1208** of the coupled resonant cell **1202** may have a diverging configuration. The coupled resonant space **1208** may have a relatively lower resonant frequency. As shown in FIGS. **17**A-**17**D, the coupled resonant cell **1202** may be grouped or matched with the at least one high-frequency resonant cell **1302**. The at least one high-frequency resonant cell **1302** may be configured as a converging resonant cell **1306**. Additionally, or in the alternative, as shown in FIGS. **17**C and **17**D, the coupled resonant cell **1202** may be grouped or matched with at least one intermediate-frequency resonant cell **1210** defining an intermediate resonant space **1212**. The at least one intermediate-frequency resonant cell **1210** may be grouped or matched with the at least one high-frequency resonant cell **1302**. The at least one intermediate-frequency resonant cell **1210** may be configured as a converging resonant cell **1306**. The at least one intermediate-frequency resonant cell **1210** may be defined at least in part by a partition **402**. A first surface **606** of the partition **402** may be oriented towards the intermediate-frequency resonant cell **1210**.

As shown in FIGS. **17**A-**17**D, a converging resonant cell **1306** has a cross-sectional dimension that differs as between one or more location along the longitudinal axis, A, of the resonant cell **206**. A cross-sectional dimension of a converging resonant cell **1306** at a location proximal to the top face **216** (c_f) may exceed a cross-sectional dimension of the converging resonant cell **1306** distal to the top face **216**, such as proximal to a partition **402** (c_p) and/or proximal to the bottom face **218** (c_b). A cross-sectional dimension of a converging resonant cell **1306** may decrease along the longitudinal axis, A, of the resonant cell in a direction oriented away from the top face **216** and towards a partition **402** and/or towards the bottom face **218**. A diverging resonant cell **1308** has a cross-sectional dimension that differs as between one or more location along the longitudinal axis, A, of the resonant cell **206**. A cross-sectional dimension of a diverging resonant cell **1308** at a location proximal to the bottom face **218** (c_b) may exceed a cross-sectional dimension of the converging resonant cell **1306** distal to the bottom face **218**, such as proximal to a partition **402** (c_p) and/or proximal to the top face **216** (c_f). A cross-sectional dimension of a diverging resonant cell **1308** may increase along the longitudinal axis, A, of the resonant cell in a direction oriented away from the top face **216** and towards the bottom face **218**, and/or in a direction oriented away from a partition **402** and towards the bottom face **218**.

Also as shown, a converging resonant cell **1306** may have at least one cell wall **300** that exhibits a convergence angle, θ, relative to the longitudinal axis, A, of the resonant cell **206**. A diverging resonant cell **1308** may have at least one cell wall **300** that exhibits a divergence angle, θ, relative to the longitudinal axis, A, of the resonant cell **206**. A convergence angle may sometimes be used to describe a diverging resonant cell **1308** and/or a cell wall **300** thereof; for example, a diverging resonant cell **1308** may have at least one cell wall that exhibits a negative convergence angle, θ, relative to the longitudinal axis, A, of the resonant cell **206**. A divergence angle may sometimes be used to describe a converging resonant cell **1306** and/or a cell wall **300** thereof; for example, a converging resonant cell **1306** may have at least one cell wall that exhibits a negative divergence angle, θ, relative to the longitudinal axis, A, of the resonant cell **206**.

In some embodiments, as shown, for example, in FIG. **17**A, a converging resonant cell **1306** may have one or more geometrically symmetric properties. For example, cell walls **300** of a converging resonant cell **1306** that face one another may have a common convergence angle, θ. Additionally, or in the alternative, cell walls **300** of a converging resonant cell **1306** that face one another may have a common cross-sectional dimension determined from a longitudinal axis, A, to the respective cell wall **300**. Additionally, or in the alternative, a diverging resonant cell **1308** may have one or more geometrically symmetric properties. For example, cell walls **300** of a diverging resonant cell **1308** that face one another may have a common divergence angle, θ. Additionally, or in the alternative, cell walls **300** of a diverging resonant cell **1308** that face one another may have a common cross-sectional dimension determined from a longitudinal axis, A, to the respective cell wall **300**.

In some embodiments, as shown, for example, in FIG. **17**B, a converging resonant cell **1306** may have one or more geometrically asymmetric properties. For example, cell walls **300** of a converging resonant cell **1306** that face one another may differ from one another in respect of their respective convergence angle, θ. Additionally, or in the alternative, cell walls **300** of a converging resonant cell **1306** that face one another may differ from one another in respect of a cross-sectional dimension determined from a longitudinal axis, A, to the respective cell wall **300**. Additionally, or in the alternative, a diverging resonant cell **1308** may have one or more geometrically asymmetric properties. For example, cell walls **300** of a diverging resonant cell **1308** that face one another may differ from one another in respect of their respective divergence angle, θ. Additionally, or in the alternative, cell walls **300** of a diverging resonant cell **1308** that face one another may differ from one another in respect of a cross-sectional dimension determined from a longitudinal axis, A, to the respective cell wall **300**.

A cross-sectional dimension, and/or a convergence angle, of a resonant cell **206**, such as a converging resonant cell **1306** and/or a diverging resonant cell **1308**, may be realized by an angle or orientation of one or more cell walls **300**, and/or by a thickness of one or more cell walls **300**. For example, a converging resonant cell **1306** may include one or more cell walls that have an increasing thickness from a location proximal to a top face **216** (c_f) to a location proximal to a partition (c_p) or to a location proximal to a bottom face **218** (c_b). Additionally, or in the alternative, a diverging resonant cell **1308** may include one or more cell walls that have an increasing thickness from a location proximal to a bottom face **218** (c_b) to a location proximal to a partition (c_p) or to a location proximal to a top face **216** (c_f).

A divergence angle, θ, and/or a convergence angle, θ, determined with reference to a longitudinal axis, A, of the resonant cell **206** and/or with reference to a plane transecting the resonant cell **206**, such as a top face **216**, a bottom face **218**, and/or a partition **402**. As determined with reference to a longitudinal axis, A, of the resonant cell **206**, a divergence angle, θ, and/or a convergence angle, θ, may be from about 0.5 degrees to about 30 degrees, such as from about 0.5 degrees to about 15 degrees, such as from about 0.5 degree to about 5 degrees, such as from about 2 degrees to about 5 degrees, such as from about 0.5 degrees to about 10 degrees, such as from about 0.5 degrees to about 5 degrees, such as from about 0.5 degrees to about 3 degrees, or such as from about 10 degrees to about 30 degrees. As determined with reference to a plane transecting the resonant cell **206**, a divergence angle, θ, and/or a convergence angle, θ, may be from about 60 degree to about 89.5 degrees, such as from about 75 degree to about 89.5 degrees, such as from about 85 degree to about 89.5 degrees, such as from about 85 degrees to about 89.5 degrees, such as from about 80 degrees to about 89.5 degrees, such as from about 85 degrees to about 89.5 degrees, such as from about 87 degrees to about 89.5 degrees, or such as from about 60 degrees to about 80 degrees.

As shown in FIGS. **17**A and **17**D, in some embodiments, an orientation, such as a slope, of a cell wall **300** may differ in respect of different locations along a longitudinal axis, A, of a resonant cell **206**. For example, a first portion of a cell wall **300** may define at least part of a converging resonant cell **1306**, and a second portion of a cell wall may define at least part of a diverging resonant cell **1308**. The first portion of the cell wall **300** may have a first orientation, such as a first slope, that differs from a second orientation, such as a second slope, of the second portion of the cell wall **300**. In some embodiments, an angle between the first portion of the cell wall **300**, that defines part of the converging resonant cell **1306**, and the second portion of the cell wall **300**, that defines part of the diverging resonant cell **1308**, may be less

than about 180 degrees, such as from about 170 degrees to about 179 degrees, or from about 175 degrees to about 179 degrees.

Referring now to FIG. **18**, another exemplary resonant cell group **1200** will be described. As shown, a resonant cell group **1200** may include a coupled resonant cell **1202** that includes at least one antecedent resonant space **1204** and a plurality of subsequent resonant spaces **1206**, or a plurality of antecedent resonant spaces **1204** and at least one subsequent resonant space **1206**. The coupled resonant cell **1202** may define a coupled resonant space **1208** with an antecedent resonant space **1204** fluidly communicating with a first subsequent resonant space **1206** and a second subsequent resonant space **1206**. The first subsequent resonant space **1206** may be defined at least in part by a partition **402**. The second subsequent resonant space **1206** may be defined at least in part by the top face **216**. The second subsequent resonant space **1206** may also function as an antecedent resonant space **1204**. For example, sound waves may propagate from the top face **216** into a first portion **1800** and/or a second portion **1802** of the coupled resonant cell **1202**. With respect to sound waves propagating from the top face **216** into the first portion **1800** of the coupled resonant cell **1202**, the first portion **1800** of the coupled resonant cell **1202** may be an antecedent resonant space **1204** and the second portion **1802** of the coupled resonant cell **1202** may be a subsequent resonant space **1206**. Sound waves propagating from the top face **216** into the first portion **1800** of the coupled resonant cell **1202** may be preferentially attenuated with respect to a relatively low frequency. With respect to sound waves propagating from the top face **216** into the second portion **1802** of the coupled resonant cell **1202**, the second portion **1802** of the coupled resonant cell **1202** may be a subsequent resonant space **1206** and the first portion **1800** of the coupled resonant cell **1202** may be an antecedent resonant space **1204**. Sound waves propagating from the top face **216** into the second portion **1802** of the coupled resonant cell **1202** may be preferentially attenuated with respect to an intermediate frequency. The coupled resonant cell **1202** may be grouped or matched with a high-frequency resonant cell **1302** that preferentially attenuates sound waves with respect to a relatively high frequency. The high-frequency resonant cell **1302** may be configured as a converging resonant cell **1306**. A partition **402** may at least partially separate the high-frequency resonant cell **1302** from the coupled resonant cell **1202**, such as from a subsequent resonant space **1206** of the coupled resonant cell **1202**. For example, the high-frequency resonant cell **1302** may define an upper resonant space **602** and the subsequent resonant space **1206** of the coupled resonant cell **1202** may define a lower resonant space **604**.

The cell walls **300** and/or the partitions **402** of an array of resonant cells **206** may have any desired thickness, which may be selected, for example, based at least in part on desired strength and/or ductility properties, and/or based at least in part on balancing strength and/or ductility properties with the corresponding weight of the array of resonant cells **206**. The cell walls **300** and the partitions **402** may have a uniform or different thicknesses at various regions and/or at relative to one another. The thickness of a cell wall **300** may be determined at a mid-point of a resonant space **208** defined by the cell wall **300**. The thickness of a partition **402** may be determined at a mid-point of the partition **402** between opposing cell walls, or, for a partition **402** that has one or more partition-apertures **616**, at a mid-point between the partition-aperture **616** and a cell wall **300**, or at a mid-point between partition-apertures **616**, respectively. When a cell wall **300** or a partition **402** has a variable thickness, an average, maximum, and/or minimum thickness may be determined. In some embodiments the cell walls **300** and/or the partitions **402** may have a thickness of from 0.002 inches to 0.5 inches, such as from 0.01 inches to 0.5 inches, such as from 0.01 inches to 0.25 inches, such as from 0.01 inches to 0.1 inches, such as from 0.02 inches to 0.08 inches, such as from 0.02 to 0.14 inches. The cell walls **300** and/or the partitions **402** may have a thickness of less than 0.5 inches, such as less than 0.5 inches, such as less than 0.25 inches, such as less than 0.1 inches, such as less than 0.08 inches, such as less than 0.05 inches, such as less than 0.04 inches, such as less than 0.03 inches, such as less than 0.02 inches. The cell walls **300** and/or the partitions **402** may have a thickness of at least 0.002 inches, such as at least 0.01 inches, such as at least 0.02 inches, such as at least 0.03 inches, such as at least 0.04 inches, such as at least 0.05 inches, such as at least 0.08 inches, such as at least 0.1 inches, such as at least 0.25 inches. Such thickness values may be determined with reference to a point (e.g., a mid-point), an average, a maximum, and/or a minimum. Other thickness are also contemplated, and may vary depending on the desired embodiment of the resonant cells **206** and/or acoustic liner **100**. For example, cell walls **300** and/or partitions **402** may be configured with a thickness selected based at least in part to provide a desired design intention, such as a thickness selected to provide a certain mechanical stiffness and/or resilience while minimizing weight. For example, in some embodiments, the cell walls may include regions of varying thickness and/or mechanical stiffeners, such as areas of increased thickness relative to a nominal cell wall thickness that act as beams running across the wall to provide a desired stiffness and/or resilience (e.g., with respect to resistance to vibrations, structural loads, etc.).

In addition to the exemplary resonant cells **206** described above, an acoustic core **200** may include resonant cells with numerous other configurations. For example, FIG. **19** shows numerous exemplary polyhedra from which a configuration for a resonant cell and/or an array of resonant cells may be selected. An exemplary resonant cell and/or array of resonant cells may include all or a portion of any one or more of the polyhedra shown in FIG. **19**. By way of example, exemplary resonant cells **206** may include a frustum, a rhombohedron, a cylinder or a cone (e.g., a cylinder or a cone may be described as an n-gonal prism where n is increasingly large, such as where n approaches 100, 1,000, 10,000, or infinity), an antiprism, a twisted prism, an annulus, a cupola (including a star cupola), a wedge, a pyramid, and combinations or portions of these. A frustum may include a trigonal frustum, a tetragonal frustum, a pentagonal frustum, a hexagonal frustum, a heptagonal frustum, an octagonal frustum, a nonagonal frustum, a decagonal frustum, a hendecagonal frustum, a dodecagonal frustum, any other frustal polyhedron, and combinations of these. A frustal polyhedron includes a frustum combined with another polyhedron, including any of the aforementioned frustum shapes combined with another polyhedron. For example, a rhombohedron may be formed from any rhombus, providing a rhombal polyhedron. As a further example, a rhombohedron may be combined with a frustum to form a rhombohedral frustum.

An antiprism includes a polyhedron composed of a polygonal top face **216**, a polygonal bottom face **218**, and a sequence of adjacent trigonal cell walls **300** with alternating orientations, bisected by the top face **216** and the bottom face **218**. An antiprism may include a trigonal antiprism, a tetragonal antiprism, a hexagonal antiprism, an antiprismal

polyhedron, and combinations of these. An antiprismal polyhedron includes an antiprism combined with another polyhedron. In some embodiments, an antiprism may include an n-sided top face **216** and an n-sided bottom face **218**. Alternatively, an antiprism may include an n-sided top face **216** and a bottom face **218** with greater than or less than n-sided.

A twisted prism includes a polyhedron composed of a polygonal top face **216**, a polygonal bottom face **218**, and a plurality of cell walls **300** including at least some cell walls **300** bisected on a diagonal, with the top face **216** and the bottom face **218** twisted relative to one another, causing at least some adjacent cell walls **300** to be concave relative to one another. A twisted prism may include a Schönhardt polyhedron, a tetrahedral twisted prism, a hexagonal twisted prism, a twisted prismal polyhedron, and combinations of these. A twisted prism has one or more cell walls **300** bisected on an adjacent diagonal or on a subsequent diagonal.

An annulus may include a polyhedron composed of a polygonal or non-polygonal top face **216**, a polygonal or non-polygonal bottom face **218**, and one or more cell walls. An annulus may include a tetragonal annulus or a cylindrical annulus (e.g., an n-gonal annulus where n is increasingly large, such as where n approaches 100, 1,000, 10,000, or infinity).

A cupola includes a polyhedron composed of a polygonal top face **216**, a polygonal bottom face **218**, and a plurality of cell walls **300** including an alternating sequence of trigonal cell walls **300** and tetragonal cell walls. In some embodiments, a cupola has a top face **216** with twice as many edges as that of its bottom face **218**, or vice versa. A cupola includes a trigonal cupola, which has a tetragonal top face **216** and a hexagonal bottom face **218**, or a hexagonal top face **216** and a tetragonal bottom face **218**; and a pentagonal cupola, which has a pentagonal top face **216** and a decagonal bottom face **218**, or vice versa. A cupola also includes star cupola, which is a cupola in which tetragonal cell walls **300** are replaced with adjacent concave trigonal cell walls. Star cupola include a pentagrammic cuploid and a heptagrammic cuploid. A pentagrammic cuploid has a pentagonal bottom face **218** and a pentagrammic top face **216**, or vice versa. A heptagrammic cuploid has a heptagonal top face **216** and a heptagrammic bottom face **218**, or vice versa. As a further example, a cupola includes cuploidal configurations with numerous cell walls, including configurations which approach frustoconical as the number of cell walls **300** increases. For example, a cupola includes an octacontagon, which has eighty cell walls. A cupola also includes a cuploidal polyhedron, which includes a cupola or cuploid combined with another polyhedron.

A wedge includes a polyhedron with a polygonal top face **216** and a plurality of polygonal cell walls **300** that converge into a line. A wedge may include a tetrahedral wedge, an obtuse wedge, an acute wedge, and a wedged polyhedron, and combinations of these. A tetrahedral wedge has two trigonal cell walls **300** and two tetragonal cell walls. The cell walls **300** are bisected by a tetragonal plane on one side and converge into a line on the other. An obtuse wedge converges into a line that is wider than the opposing tetragonal plane. An acute wedge converges into a line that is narrower than the opposing tetragonal plane. A wedged polyhedron includes a wedge combined with another polyhedron.

A pyramid includes a polyhedron with a polygonal base bisected by a plurality of trigonal cell walls **300** that converge into a point. A pyramid includes a tetragonal pyramid composed of a tetragonal face bisected by four trigonal cell walls **300** which converge into a point. A pyramid also includes a star pyramid, composed of a star polygonal base and a plurality of trigonal cell walls **300** that converge into a point. As an example, a star pyramid includes a pentagonal star pyramid.

In some embodiments, an acoustic core **200** may be an injection molded acoustic core **200** formed by a molding process, such as an injection molding process and/or a compression molding process. One or more structural features of the acoustic core **200** may be configured to facilitate the use of an injection molding process to form an injection molded acoustic core **200** that include various other structural features in accordance with the present disclosure. Additionally, or in the alternative, one or more structural features of the acoustic core **200** may be configured to facilitate the use of a press-forming process, such as rolling or stamping, to form a press rolled acoustic core **200** that includes various other structural features in accordance with the present disclosure. For example, an acoustic core may include a converging resonant cells and/or diverging resonant cells at least in part to allow for the geometry of the resonant cells to inherently provide a draft angle sufficient for good release of the acoustic core during the injection molding or forming process, as applicable, while at the same time providing for desired noise attenuation properties at a desired frequency range. Additionally, or in the alternative, an acoustic core may include converging resonant cells and/or diverging resonant cells that allow for a partition to be integrally formed with the cell walls using an injection molding process or a press-forming process.

It will be appreciated that the aforementioned examples of structural features are provided by way of example only and not to be limiting. In fact, it will be apricated that resonant cells with still other presently disclosed structural features can be included in an injection molded acoustic core and/or a press-formed acoustic core, at least in part by virtue of the resonant cell including still other presently disclosed structural features. Additionally, or in the alternative, tooling assemblies and/or forming tools may be configured to provide injection molded and/or press-formed acoustic cores with various presently disclosed structural features, the inclusion of which being made possible at least in part by the configuration of such tooling assemblies and/or forming tools.

It will also be appreciated that acoustic cores with the presently disclosed structural features may be realized using other manufacturing technologies in addition, or in the alternative, to injection molding and/or press-forming are discussed herein, such as additive manufacturing and/or various other manufacturing technologies disclosed herein. However, selection of the production technology for producing acoustic cores and/or acoustic liners may be influenced at least in part by considerations such as production capacity and/or production costs, and as such, the presently disclosed structural features that facilitate the use of certain production technologies to form acoustic cores that have certain other presently disclosed structural features may be of particular interest to those who may wish to utilize the teachings of the present disclosure.

Referring now to FIGS. **20A-20I** exemplary tooling assemblies **2000** will be described. An exemplary tooling assembly **2000** may include one or more forming tools **2002**. The exemplary tooling assemblies **2000** and/or forming tools **2002** may be utilized to form an acoustic core **200** in accordance with some embodiments of the present disclosure. An exemplary tooling assembly **2000** and/or one or more forming tools **2002** may be utilized, for example, to

form an acoustic core **200** using a molding process, such as injection molding or compression molding. The tooling assembly **2000** may be configured as, or utilized in, a molding assembly, such as an injection molding assembly or a compression molding assembly. The one or more forming tools **2002** may be respectively configured as, or utilized in, a molding tool, such as an injection molding tool or a compression molding tool. Additionally, or in the alternative, an exemplary tooling assembly **2000** and/or one or more forming tools **2002** may be utilized to form an acoustic core **200** using a forming process, such as rolling or stamping. The tooling assembly **2000** may be configured as, or utilized in, a press-forming assembly, such as a rolling assembly or a stamping assembly. The one or more of the forming tools **2002** may be configured as, or utilized in, a forming tool, such as a rolling tool or a stamping tool. An exemplary tooling assembly **2000** may include forming tools **2002** made from a relatively hard material, such as aluminum, nickel, steel alloy, or the like. Additionally, or in the alternative, an exemplary tooling assembly **2000** may include forming tools **2002** made from a relatively soft material, such as silicone, carbon fiber, or fiberglass.

By way of example, FIG. **20**A shows an exemplary tooling assembly **2000**, and FIGS. **20**B and **20**C show exemplary forming tools **2002** that may be included in the tooling assembly **2000** shown in FIG. **20**A. As shown, an exemplary forming tool **2002** may include one or more support members **2004**, and a plurality of forming elements **2006**. The plurality of forming elements **2006** may be coupled to the support member **2004**. Additionally, or in the alternative, the plurality of forming elements **2006** may be integrally formed as part of the support member **2004**. The support member **2004** may be configured as and/or may include a clamp plate, a platen, or the like. During operation of a tooling assembly **2000**, the one or more forming tools **2002** may be movable or stationary. For example, an exemplary tooling assembly **2000** may include a movable forming tool **2002** and a stationary forming tool **2002**. The movable forming tool **2002** may be brought into proximity to the stationary forming tool **2002** to form an acoustic core **200**. A stationary forming tool **2002** may be sometimes referred to as a cavity element and/or a movable forming tool **2002** may be sometimes referred to as a core element, such as in the case of an injection molding tooling assembly **2000**. The tooling assembly **2000** may include a plurality of guide pins (not shown) configured to align respective ones of a plurality of forming tools **2002** with one another. In some embodiments, a tooling assembly **2000** may include a top forming tool **2001** and a bottom forming tool **2003**. The top forming tool **2001** may correspond to a top face **216** of an acoustic core, and a bottom forming tool may correspond to a bottom face **218** of an acoustic core. A top forming tool **2001** may be configured as a cavity element and/or a core element. Additionally, or in the alternative, a top forming tool **2001** may be configured as a stationary forming tool **2002** and/or as a movable forming tool **2002**. A bottom forming tool **2003** may be configured as a cavity element and/or a core element. Additionally, or in the alternative, a bottom forming tool **2003** may be configured as a stationary forming tool **2002** and/or as a movable forming tool **2002**. For example, a top forming tool **2001** may be configured as a stationary forming tool **2002** and a bottom forming tool **2003** may be configured as a moving forming tool **2002**. Additionally, or in the alternative, a top forming tool **2001** may be configured as a moving forming tool **2002** and a bottom forming tool **2003** may be configured as a stationary forming tool **2002**.

When the plurality of forming tools **2002** are brought into proximity with one another, a space between the forming elements **2006** may define a mold cavity **2008**. The forming tool **2002** may include one or more sprue elements **2010** through which a moldable material may be injected into the mold cavity **2008**. Exemplary moldable materials may include polymeric materials, such as thermoplastic materials and/or thermoset materials, such as those described herein. In the case of an injection molding process, the moldable material may be heated to a softened or fluidic state so as to allow the moldable material to be injected into the mold cavity **2008**. The moldable material may cool actively or passively. After the moldable material has cooled, the forming tools defining the mold cavity **2008** may be separated from one another and the acoustic core **200** formed by the tooling assembly **2000** may be removed. In some embodiments, such as in the case of injection molding or compression molding, one or more of the forming tools **2002** may include one or more ejector pins **2012** extensible through the support member **2004** and/or through a respective forming element **2006**, to push the acoustic core **200** away from the respective forming tool **2002** and out of the mold cavity **2008**.

As shown, the tooling assemblies **2000** and/or forming tools **2002** may be configured to form an acoustic core **200**, such as an acoustic core with a curvilinear profile. By way of example, the tooling assemblies **2000** and forming tools **2002** shown in FIGS. **20**A-**20**I may be configured to form an acoustic core **200** with a convex curvilinear profile, such as in the case of an acoustic core **200** configured to fit a radially inward curved surface, such as a radially inward side of a nacelle. Additionally, or in the alternative, a tooling assembly **2000** and/or a forming tool **2002** may be configured to form an acoustic core **200** with a concave curvilinear profile, and/or an acoustic core **200** that includes at least one a concave portion and at least one convex portion with respective curvilinear profiles. It will be appreciated that curvilinear profiles shown are provided by way of example and not to be limiting. In fact, acoustic cores **200** with any desired curvilinear profile may be formed using one or more tooling assemblies **2000** and/or corresponding forming tools **2002** in accordance with the present disclosure. Likewise, tooling assemblies **2000** and/or corresponding forming tools **2002** may be provided with any desired curvilinear profile.

In some embodiments, a forming tool **2002** may include one or more forming elements **2006** that have a draft angle, θ_d, such that a cross-sectional dimension of the forming element decreases from a location proximal to the support element **2004** to a location distal to the support element **2004** by an amount suitable for allowing good release of the acoustic core **200** from the forming tool **2002**. The draft angle may be determined with reference to a longitudinal axis, A, of the respective forming element **2006**, and/or a plane equidistant from the longitudinal axis of the forming element **2006**. The draft angle, θ_d, may correspond to a difference in a cross-sectional dimension of the forming element **2006** as between a location proximal to the support element **2004** and a location distal from the support element **2004**, such that the cross-sectional dimension c_i proximal to the support element **2004** exceeds the cross sectional dimension c_{ii} distal from the support element.

The draft angle, θ_d, sufficient to provide good release may be provided by the dimensions of the resonant cells **206** of the acoustic core **200**, such as one or more dimensions of one or more cell walls **300** and/or one or more dimensions of a resonant space **208** defined by the one or more cell walls. For example, the dimensions of the resonant cells **206** may have

a convergence angle, θ, that inherently corresponds to a suitable draft angle, θ_d. Additionally, or in the alternative, one or more dimensions of the forming elements **2006** may differ from corresponding dimensions of the cell walls **300** and/or resonant space **208** so as to provide a desired draft angle, θ_d. For example, a convergence angle, θ, of one or more resonant cells **206** may be introduced and/or augmented to provide a suitable draft angle, θ_d. Additionally, or in the alternative, a forming tool **2002** may be configured with a draft angle, θ_d, that differs from a corresponding convergence angle, θ.

The draft angle, θ_d, sufficient for reliably good release of an acoustic core **200** from the forming tool **2002** may depend at least in part on the length of the respective forming element **2006**. In general, relatively longer the forming elements **2006** may call for relatively larger draft angles. In some embodiments, a draft angle, θ_d, suitable for good release of an acoustic core from a forming tool **2002** may be from about 0.5 degrees to about 10 degrees, such as from about 0.5 degrees to about 5 degrees, or such as from about 0.5 degrees to about 3 degrees.

The mold cavity **2008** defined by one or more forming tools **2002** of a tooling assembly **2000** may correspond to at least a portion of an acoustic core **200**. By way of example, the tooling assembly **2000** shown in FIG. **20**A, and/or the forming tools **2002** shown in FIGS. **20**A-**20**C, may correspond to an acoustic core that includes resonant cells configured as shown in FIG. **17**A. As another example, the forming tools **2002** shown in FIGS. **20**D-**20**F, and/or the tooling assembly **2000** shown in FIG. **20**F, the may correspond to an acoustic core that includes resonant cells configured as shown in FIG. **17**C. It will be appreciated that the forming assemblies **2000** and forming tools **2002** shown are provided by way of example and not to be limiting, and that forming assemblies **2000** and forming tools **2002** may be configured to form acoustic cores **200** with any desired configuration, including forming assemblies **2000** and forming tools **2002** configured to form any of the acoustic cores **200** described in the present disclosure.

The one or more forming tools **2002** may provide a mold cavity **2008** configured to form one or more resonant cells **206**, such as an array of resonant cells **206**, of an acoustic core **200**. The plurality of forming elements **2006** of a forming tool **2002** may correspond to respective resonant spaces **208** of the resonant cell **206**. The mold cavity **2008** may align with the cell walls **300** of the resonant cells **206**. In some embodiments, the one or more sprue elements **2010** may align with at least some of the cell walls **300**. In some embodiments, the one or more ejector pins **2012**, when actuated, may push against a support element **2004** of a counterpart forming tool **2002** and/or against a partition **402** of a resonant cell **206** formed by the tooling assembly **2000**.

In some embodiments, as shown, for example, in FIGS. **20**G-**20**I, a tooling assembly **2000** and/or one or more forming tools **2002** may be configured to form resonant cells **206** that include partitions **402** with one or more partition-apertures **616**, such as described, for example, with reference to FIGS. **4**A and **4**B and/or FIGS. **6**A-**6**E. For example, as shown, a forming element **2006** may include a protrusion **2014** extending from a body portion **2016** of the forming element **2006**. The protrusion **2014** may come into proximity and/or contact with a counterpart forming element **2006** of a corresponding forming tool **2002**. When forming the acoustic core **200** with the tooling assembly **2000**, the protrusion **2014** may define a perimeter of the partition-aperture **616** of the resonant cell **206**. The proximity and/or contact between the protrusion **2014** and the counterpart forming element **2006** may be sufficient to restrict the moldable material from entering the space where an aperture is intended to be formed by the protrusion **2014**. In some embodiments, a forming element **2006** may include a plurality of protrusions **2014**. The plurality of protrusions **2014** may be configured to form a plurality of partition-apertures **616**, such as described with reference to FIGS. **7**A-**7**D and/or FIGS. **8**A-D, and/or FIGS. **9**A-**9**F.

FIG. **21**A shows an exemplary acoustic core **200** formed at least in part using the tooling assembly **2000** shown in FIG. **20**A and/or the forming tools shown in FIGS. **20**C and **20**C. By way of example, FIG. **21**D shows an exemplary acoustic liner **100** that includes an acoustic core **200** formed using the tooling assembly **2000** and forming tools **2002** shown in FIGS. **20**G-**20**I. In some embodiments, an acoustic liner **100** may be formed at least in part from an acoustic core **200**, such as the acoustic core **200** shown in FIG. **201**A, an acoustic screen **202**, such as shown in FIG. **21**B, and/or a back sheet **204**, such as shown in FIG. **21**C. The acoustic core **200** may be secured between the acoustic screen **202** and the back sheet **204** using an adhesive process, and/or a thermal, sonic, or electric welding process.

Now turning to FIGS. **22**A and **22**B, exemplary methods **2200** of making an acoustic core **200** and/or an acoustic liner will be described. As shown in FIG. **22**A, an exemplary method **2200** may include, at block **2202**, determining a configuration for an acoustic core **200** that includes an array of resonant cells **206**. An exemplary method **2200** may include, at block **2204**, producing the acoustic core **200** comprising the array of resonant cells. In some embodiments, an exemplary method **2200** may include, at block **2206**, producing an acoustic liner **100** that includes the acoustic core **200**. The acoustic liner **100** may include an acoustic screen **202** and/or a back sheet **204**. Determining a configuration for the acoustic core **200** may include determining a configuration for the acoustic screen and/or the back sheet. Producing the acoustic core **200** may include producing the acoustic screen and/or the back sheet. The acoustic core **200**, including the array of resonant cells, the acoustic screen, and/or the back sheet may be produced using an additive manufacturing technology. Any suitable additive manufacturing technology may be used. Respective ones of the resonant cells in the array include one or more cell walls **300** and a resonant space defined by the one or more cell walls. The array of resonant cells may be oriented obliquely relative to a normal line **214** represented by an axis R at a cell angle θ_C greater than zero degrees. The oblique orientation may improve buildability and build quality of the array of resonant cells.

Still referring to FIG. **22**A, in some embodiments, an exemplary method **2200** may include, at block **2208**, determining a configuration for a plurality of coupled resonant cells **1202**, respective ones of the plurality of coupled resonant cells **1202** defining an antecedent resonant space **1204** and a subsequent resonant space and having at least one cell wall **300** with one or more wall-apertures defining a pathway between the antecedent resonant space **1204** and the subsequent resonant space. A cross-sectional dimension of the one or more wall-apertures defining the pathway between the antecedent resonant space **1204** and the subsequent resonant space may be less than a cross-sectional dimension of the antecedent resonant space **1204** and/or a cross-sectional dimension of the subsequent resonant space. The cross-sectional dimension of the antecedent resonant space **1204** and/or the cross-sectional dimension of the subsequent resonant space may be determined adjacent to the one or more wall-apertures.

In some embodiments, block **2208** of an exemplary method **2200** may include determining a resonant frequency of low-frequency sound waves desired to be attenuated, and tuning the plurality of coupled resonant cells **1202** to the resonant frequency of the low-frequency sound waves desired to be attenuated, wherein the resonant length of respective ones of the plurality of coupled resonant cells **1202** exceeds the height or axial length of the respective resonant cells **1202** and/or the height of the acoustic core **200**. The resonant length of respective ones of the plurality of coupled resonant cells **1202** may exceed the height or axial length of the acoustic core **200** at least in part by the cross-sectional dimension of the one or more wall-apertures defining the pathway between the antecedent resonant space **1204** and the subsequent resonant space being less than the cross-sectional dimension of the antecedent resonant space **1204** and/or the cross-sectional dimension of the subsequent resonant space.

An exemplary method **2200** may additionally or alternatively include, at block **2210**, determining a configuration for a plurality of high-frequency resonant cells **1302** respectively defining a high-frequency resonant space **1304**. Respective ones of the plurality of high-frequency resonant cells **1302** may be matched with respective ones of the plurality of coupled resonant cells **1202**. In an exemplary method, block **2210** may additionally or alternatively include determining a resonant frequency of high-frequency sound waves desired to be attenuated, and tuning the plurality of high-frequency resonant cells **1302** to the resonant frequency of the high-frequency sound waves desired to be attenuated. In exemplary embodiments, the resonant length of respective ones of the plurality of high-frequency resonant cells **1302** may exceed the height or axial length of the respective high-frequency resonant cell **1302**.

An exemplary method **2200** may additionally or alternatively include, at block **2212**, determining a configuration for a plurality intermediate-frequency resonant cells **1210** respectively defining an intermediate-frequency resonant space. Respective ones of the plurality of intermediate-frequency resonant cells **1210** may be matched with respective ones of the plurality of coupled resonant cells **1202** and/or respective ones of the plurality of high-frequency resonant cells **1302**. In an exemplary method, block **2212** may additionally or alternatively include determining a resonant frequency of intermediate-frequency sound waves desired to be attenuated, and tuning the plurality of intermediate-frequency resonant cells **1210** to the resonant frequency of the intermediate-frequency sound waves desired to be attenuated. The resonant length of respective ones of the plurality of intermediate-frequency resonant cells **1210** may exceed the height or axial length of the respective intermediate-frequency resonant cell **1210**.

An exemplary method **2200** may additionally or alternatively include, at block **2214**, determining a configuration for a plurality of partitioned resonant cells, with respective ones of the plurality of partitioned resonant cells having a partition **402** transecting a corresponding resonant space of the partitioned resonant cell. In some embodiments, a subsequent resonant space of at least some of the plurality of coupled resonant cells **1202** may define a lower resonant space **604** of at least some of the plurality of partitioned resonant cells. Additionally, or in the alternative, a high-frequency resonant space **1304** of at least some of the high-frequency resonant cells **1302** may define an upper resonant space of at least some of the plurality of partitioned resonant cells. Additionally, or in the alternative, an intermediate-frequency resonant space of at least some of the intermediate-frequency resonant cells **1210** may define an upper resonant space of at least some of the plurality of partitioned resonant cells.

In an exemplary method **2200**, determining the configuration for the plurality of coupled resonant cells **1202**, at block **2208**, may include determining a cross-sectional dimension of the one or more wall-apertures defining the pathway between the antecedent resonant space **1204** and the subsequent resonant space based at least in part on an aperture reduction factor β. Additionally, or in the alternative, block **2208** may include determining a cross-sectional dimension of an antecedent resonant space **1204** and/or a cross-sectional dimension of a subsequent resonant space based at least in part on an aperture reduction factor β. The aperture reduction factor β may be determined based at least in part on a relationship between the aperture reduction factor β and the resonant frequency of a resonant cell. The relationship between the aperture reduction factor β and the resonant frequency may include a decreasing resonant frequency with increasing aperture reduction factor β. The relationship between the aperture reduction factor β and the resonant frequency may include a linear region and a non-linear region (e.g., an asymptotic region). The determined aperture reduction factor β may correspond to the non-linear region (e.g., the asymptotic region).

Now referring to FIG. **22**B, exemplary methods **2200** of making an acoustic core **200** and/or an acoustic liner will be further described. In some embodiments, an exemplary method **2200** of making an acoustic core **200** and/or an acoustic liner may include one or more of the steps described with reference to FIG. **22**A. The steps described with reference to FIG. **22**A may include one or more of the steps described with reference to FIG. **22**B. Additionally, or in the alternative, one or more of the steps described with reference to FIG. **22**B may be performed separately from the steps described with reference to FIG. **22**A. For example, the step of producing an acoustic core **200** that includes an array of resonant cells **206**, at block **2204**, may include one or more of the steps described with reference to FIG. **22**B. Additionally, or in the alternative, the step of producing an acoustic liner **100** that includes the acoustic core **200**, at block **2206**, may include one or more of the steps described with reference to FIG. **22**B.

As shown in FIG. **22**B, an exemplary method **2200** of producing an acoustic core **200**, and/or an exemplary method **2200** of producing an acoustic liner **100**, may include, at block **2216**, determining, with an acoustic core configuration system **2302**, a configuration for a tooling assembly **2000** and/or a configuration for one or more forming tools **2002** for use in a tooling assembly **2000**. The forming tools **2002** and/or the tooling assembly **2000** may be configured for producing an acoustic core **200** that includes an array of resonant cells **206**. The configuration for the tooling assembly **2000**, and/or the configuration for the one or more forming tools **2002**, may be determined based at least in part on a configuration for an acoustic core **200**, such as determined, for example in accordance with block **2202** and/or any one or more of blocks **2208-2214** described with reference to FIG. **22**A. The one or more forming tools **2002** and/or the tooling assembly **2000** may be configured as described herein, such as with reference to FIGS. **20**A-**20**I. In some embodiments, the one or more forming tools **2002** may include a draft angle, θ_d, sufficient to provide good release of the acoustic core **200** from the one or more forming tools **2002**.

In some embodiments, an exemplary method **2200** may include, at block **2218**, making the one or more forming

tools **2002** and/or assembling a tooling assembly **2000** that includes the one or more forming tools **2002**. The one or more forming tools **2002** may have a configuration determined based at least in part the configuration determined for the acoustic core **200**. In some embodiments, an exemplary method **2200** may include, at block **2220**, forming the acoustic core **200** using a tooling assembly **2000** that includes the one or more forming tools **2002**. In some embodiments, an exemplary method **2200** may include, at block **2222**, forming an acoustic screen **202** and/or forming a back sheet **204**. Additionally, or in the alternative, in some embodiments, an exemplary method **2200** may include, at block **2224**, forming an acoustic liner **100** at least in part by attaching the acoustic screen **202** and the acoustic core **200** to one another, and/or by attaching the back sheet **204** and the acoustic screen **202** to one another.

In some embodiments, the presently disclosed methods, including the exemplary methods **2200** described with reference to FIGS. **22**A and **22**B, may be performed at least in part using a computer-implemented solution, such as software or hardware that is configured to use an acoustic core configuration module to determine a configuration for an acoustic core that includes an array of resonant cells and/or one or more resonant cell groups. In some embodiments, exemplary methods may be performed using an acoustic core manufacturing system and/or various features thereof. In some embodiments, an optimization algorithm may be utilized. The algorithm may include an attenuation model. By way of example, the attenuation model may be applied to a baseline noise spectrum in order to evaluate various design parameters for a given configuration of an acoustic core, and/or to evaluate various design parameters for resonant cells and/or resonant cell group that make up the acoustic core.

Now turning to FIG. **23**, exemplary acoustic core manufacturing systems **2300** and acoustic core configuration systems **2302** will be described. An exemplary acoustic core manufacturing system **2300** may include an acoustic core configuration system **2302**. Additionally, or in the alternative, an acoustic core configuration system **2302** may be provided separately from an acoustic core manufacturing system **2300**. An acoustic core manufacturing system **2300** and/or an acoustic core configuration system **2302** may include computer-readable media configured to determine a configuration for an acoustic core **200**. Additionally, or in the alternative, computer-readable media may be configured to operate an acoustic core manufacturing system **2300** and/or an acoustic core configuration system **2302**.

An acoustic core manufacturing system **2300** and/or an acoustic core configuration system **2302** may include a tooling assembly production system **2301** and/or a tooling assembly configuration system **2303**. Additionally, or in the alternative, a tooling assembly production system **2301** and/or a tooling assembly configuration system **2303** may include an acoustic core manufacturing system **2300** and/or an acoustic core configuration system **2302**. For example, an acoustic core configuration system **2302** and/or a tooling assembly configuration system **2303** may be modules of a computing system. A tooling assembly production system **2301** may be configured to produce a tooling assembly **2000** and/or one or more forming tools for use in a tooling assembly. A tooling assembly configuration system **2303** may include computer-readable media configured to determine a configuration of a tooling assembly **2000** and/or one or more forming tools **2002** for use with a tooling assembly **2000**. Additionally, or in the alternative, computer-readable media may be configured to operate a tooling assembly configuration system **2303** and/or a tooling assembly production system **2301**.

An acoustic core manufacturing system **2300** and/or an acoustic core configuration system **2302** may include a user interface **2304** configured to allow a user to operate the acoustic core manufacturing system **2300** and/or the acoustic core configuration system **2302**. Additionally, or in the alternative, a tooling assembly production system **2301** and/or a tooling assembly configuration system **2303** may include a user interface **2304** configured to allow a user to operate the tooling assembly production system **2301** and/or the tooling assembly configuration system **2303**.

In some embodiments, an acoustic core manufacturing system **2300** may include a manufacturing machine **2306** configured to manufacture an acoustic core **200** according to a configuration provided by the acoustic core configuration system **2302**. The acoustic core manufacturing system **2300** may be configured to manufacture acoustic cores **200** using a tooling assembly **2000** configured in accordance with the present disclosure. The acoustic core manufacturing system **2300** and/or the acoustic core configuration system **2302** may include a management system **2308** configured to provide enterprise-level control for one or more elements of the acoustic core manufacturing system **2300** and/or for one or more elements of the acoustic core configuration system **2302**. Various elements of the acoustic core manufacturing system **2300** and/or various elements of the acoustic core configuration system **2302** may be communicatively coupled with one another via wired or wireless communication lines **2310** as part of a communication network **2312**.

In some embodiments, the tooling assembly production system **2301** and/or the tooling assembly configuration system **2303** may include a management system **2308** configured to provide enterprise-level control for one or more elements of the tooling assembly production system **2301** and/or for one or more elements of the tooling assembly configuration system **2303**. Various elements of the tooling assembly production system **2301** and/or various elements of the tooling assembly configuration system **2303** may be communicatively coupled with one another via wired or wireless communication lines **2310** as part of a communication network **2312**.

The acoustic core configuration system **2302** and/or the tooling assembly configuration system **2303** may include one or more computing devices **2314**, which may be located locally or remotely relative to the user interface **2304**, the manufacturing machine **2306**, and/or the management system **2308**. For example, the one or more computing devices may be located at an acoustic core development facility, which may include a physical facility and/or a cloud-based facility. The one or more computing devices **2314** may include one or more processors **2316** and one or more memory devices **2318**. The one or more processors **2316** may include any suitable processing device, such as a microprocessor, microcontroller, integrated circuit, logic device, and/or other suitable processing device.

The one or more memory devices **2318** may store information accessible by the one or more processors **2316**, including computer-executable instructions **2320** that can be executed by the one or more processors **2316**. The instructions **2320** may include any set of instructions which when executed by the one or more processors **2316** cause the one or more processors **2316** to perform operations. In some embodiments, the instructions **2320** may be configured to cause the one or more processors **2316** to perform operations for which the acoustic core manufacturing system **2300**, the

acoustic core configuration system **2302**, the tooling assembly production system **2301**, the tooling assembly configuration system **2303**, and/or the one or more computing devices **2314** are configured.

As used herein, the terms "processor" and "computer" and related terms, such as "processing device" and "computing device", are not limited to just those integrated circuits referred to in the art as a computer, but broadly refers to a microcontroller, a microcomputer, a programmable logic controller (PLC), an application specific integrated circuit, and other programmable circuits, and these terms are used interchangeably herein. In the embodiments described herein, a memory device **2318** may include, but is not limited to, a non-transitory computer-readable medium, such as a random access memory (RAM), and computer-readable nonvolatile media, such as hard drives, flash memory, and other memory devices. Alternatively, a floppy disk, a compact disc-read only memory (CD-ROM), a magneto-optical disk (MOD), and/or a digital versatile disc (DVD) may also be used.

As used herein, the term "non-transitory computer-readable medium" is intended to be representative of any tangible computer-based device implemented in any method or technology for short-term and long-term storage of information, such as, computer-readable instructions, data structures, program modules and sub-modules, or other data in any device. The methods described herein may be encoded as executable instructions embodied in a tangible, non-transitory, computer readable media, including, without limitation, a storage device and/or a memory device. Such instructions, when executed by a processor, cause the processor to perform at least a portion of the methods described herein. Moreover, as used herein, the term "non-transitory computer-readable medium" includes all tangible, computer-readable media, including, without limitation, non-transitory computer storage devices, including, without limitation, volatile and nonvolatile media, and removable and non-removable media such as a firmware, physical and virtual storage, CD-ROMs, DVDs, and any other digital source such as a network or the Internet, as well as yet to be developed digital means, with the sole exception being a transitory, propagating signal.

Exemplary operations of the acoustic core manufacturing system **2300**, the acoustic core configuration system **2302**, and/or the one or more computing devices **2314**, may include determining a configuration for an acoustic core **200** and/or producing an acoustic core **200**. The configuration for the acoustic core **200** may be determined using the acoustic core configuration system **2302**. Additionally, or in the alternative, the acoustic core **200** may be produced using the manufacturing machine **2306**.

The acoustic core configuration system **2302** may include one or more acoustic core configuration modules **2322**. An acoustic core configuration module **2322** may be utilized by the acoustic core configuration system **2302** to determine a configuration for an acoustic core **200**. Additionally, or in the alternative, an acoustic core configuration module **2322** may be utilized by a manufacturing machine **2306** to produce an acoustic core **200**. The one or more acoustic core configuration modules **2322** may be implemented in hardware and/or software, including any non-transitory computer-program product and/or cloud-based solution.

An acoustic core configuration module **2322** may include proprietary modeling algorithms for determining a configuration for an acoustic core **200** and/or producing an acoustic core **200**. The proprietary algorithms may include tools for determining the impact on noise attenuation for various configurations of resonant cells and/or resonant cell groups in various operating environments under given operating conditions. The proprietary algorithms may include tools for matching or grouping resonant cells with one another in an array, for example, to provide a recognizable pattern that repeats across at least a portion of the array of resonant cells, including determining configurations for resonant cells that geometrically fit with one another, and/or that are tuned to attenuate a complementary range of resonant frequencies. Additionally, or in the alternative, proprietary algorithms may include tools for grouping or aligning partitions, such as to improve buildability and mechanical integrity of the acoustic core.

An acoustic core configuration module **2322** may additionally or alternatively include proprietary modeling algorithms for determining a configuration for reduced-frequency resonant cells, including low-frequency resonant cells, high-frequency resonant cells, and/or intermediate-frequency resonant cells, for a respective range of resonant frequencies. An acoustic core configuration module **2322** may additionally or alternatively include proprietary modeling algorithms for determining a resonant length for a resonant cell and/or to compare the resonant frequency to a nominal resonant cell. For example, the acoustic core configuration module **2322** may determine a configuration for a resonant cell that provides a desired resonant length that accommodates a given acoustic core height constraint. An acoustic core configuration module **2322** may additionally or alternatively include proprietary modeling algorithms for determining configurations for coupled resonant cells, partitioned resonant cells, oblique resonant cells, and/or perpendicular resonant cells. An acoustic core configuration module **2322** may additionally or alternatively include proprietary modeling algorithms for determining configurations for acoustic screens **202** and/or back sheets **204** to accompany an acoustic core **200**, and/or configurations for a complete acoustic liner **100**. The proprietary algorithms included in an acoustic core configuration module **2322** may include finite element analysis tools, three-dimensional modeling tools, simulation modeling tools, and the like.

Exemplary operations of the tooling assembly production system **2301**, the tooling assembly configuration system **2303**, and/or the one or more computing devices **2314**, may include determining a configuration for a tooling assembly **2000** and/or determining a configuration for one or more forming tools **2002** for use in a tooling assembly **2000**. Additionally, or in the alternative, exemplary operations may include producing a tooling assembly **2000** and/or producing one or more forming tools **2002** for use in a tooling assembly **2000**. The configuration for the tooling assembly **2000** and/or the configuration for the one or more forming tools **2002** may be determined using the tooling assembly configuration system **2303**. Additionally, or in the alternative, the tooling assembly **2000** and/or the one or more forming tools **2002** may be produced using the manufacturing machine **2306**.

The tooling assembly configuration system **2303** may include one or more tooling assembly configuration modules **2323**. Tooling assembly configuration module **2323** may be utilized by the tooling assembly configuration system **2303** to determine a configuration for a tooling assembly **2000** and/or a configuration for one or more forming tools **2002**. Additionally, or in the alternative, tooling assembly configuration module **2323** may be utilized by tooling production machine **2307** to produce a tooling assembly **2000** and/or one or more forming tools **2002**. The one or more tooling assembly configuration modules **2323** may be imple-

mented in hardware and/or software, including any non-transitory computer-program product and/or cloud-based solution.

A tooling assembly configuration module **2323** may include proprietary modeling algorithms for determining a configuration for a tooling assembly **2000** and/or for determining a configuration for one or more forming tools **2002**. Additionally, or in the alternative, a tooling assembly configuration module **2323** may include proprietary modeling algorithms for producing a tooling assembly **2000** and/or for producing one or more forming tools **2002**. The proprietary algorithms may include tools for determining a configuration for a tooling assembly **2000** and/or for determining a configuration for one or more forming tools **2002**, based at least in part on a determined configuration for an acoustic core **200**, such as based at least in part on the impact on noise attenuation for various configurations of resonant cells **206** and/or resonant cell groups **1200** in various operating environments under given operating conditions. The proprietary algorithms may include tools for determining configurations for a tooling assembly **2000** and/or for forming tools **2002**, based at least in part on determined matching or grouping of resonant cells with one another in an array, for example, to provide a recognizable pattern that repeats across at least a portion of the array of resonant cells, including based at least in part on determined configurations for resonant cells **206** that geometrically fit with one another, and/or that are tuned to attenuate a complementary range of resonant frequencies. Additionally, or in the alternative, proprietary algorithms may include tools for determining configurations for tooling assemblies **2000** and/or forming tools **2002**, based at least in part on grouping or aligning partitions, such as to improve buildability and mechanical integrity of the acoustic core, and/or to improve release of the acoustic core from the tooling assembly **2000** and/or the forming tools **2002** thereof.

A tooling assembly configuration module **2323** may additionally or alternatively include proprietary modeling algorithms for determining a configuration for tooling assemblies **2000** and/or forming tools **2002** configured to produce reduced-frequency resonant cells, including low-frequency resonant cells, high-frequency resonant cells, and/or intermediate-frequency resonant cells, for a respective range of resonant frequencies. A tooling assembly configuration module **2323** may additionally or alternatively include proprietary modeling algorithms for determining a configuration of tooling assemblies **2000** and/or forming tools **2002** configured to produce acoustic cores **200** that include resonant cells **206** with a desired resonant length that accommodates a given acoustic core height constraint. A tooling assembly configuration module **2323** may additionally or alternatively include proprietary modeling algorithms for determining configurations for tooling assemblies **2000** and/or forming tools **2002** configured to produce coupled resonant cells, partitioned resonant cells, converging resonant cells, diverging resonant cells, oblique resonant cells, and/or perpendicular resonant cells. A tooling assembly configuration module **2323** may additionally or alternatively include proprietary modeling algorithms for determining tooling assemblies **2000** and/or forming tools **2002** configured to produce acoustic cores with a curvilinear profile, such as a convex curvilinear profile and/or a concave curvilinear profile. A tooling assembly configuration module **2323** may additionally or alternatively include proprietary modeling algorithms for determining tooling assemblies **2000** and/or forming tools **2002** configured to produce acoustic screens **202** and/or back sheets **204** to accompany an acoustic core **200**, and/or configurations for a complete acoustic liner **100**. The proprietary algorithms included in a tooling assembly configuration module **2323** may include finite element analysis tools, three-dimensional modeling tools, simulation modeling tools, and the like.

The memory devices **2318** may store data **2324** accessible by the one or more processors **2316**. The data **2324** can include current or real-time data, past data, or a combination thereof. The data **2324** may be stored in a data library **2326**. As examples, the data **2324** may include data associated with or generated by the acoustic core manufacturing system **2300**, the acoustic core configuration system **2302**, the user interface **2304**, the manufacturing machine **2306**, the management system **2308**, the one or more computing devices **2314**, and/or the one or more acoustic core configuration modules **2322**. The data **2324** may also include other data sets, parameters, outputs, information, associated with an acoustic core manufacturing system **2300** and/or the acoustic core configuration system **2302**. Additionally, or in the alternative, the data **2324** may include other data sets, parameters, outputs, information, associated with a tooling assembly production system **2301** and/or a tooling assembly configuration system **2303**. The data **2324**, including the data library **2326** and/or other data sets, parameters, outputs, information may be utilized by the one or more acoustic core configuration modules **2322** to perform operations for which they are configured.

The one or more computing devices **2314** may also include a communication interface **2328**, which may be used for communications with the communication network. The communication interface **2328** may include any suitable components for interfacing with one or more network(s), including for example, transmitters, receivers, ports, controllers, antennas, and/or other suitable components. The communication interface **2328** may allow the one or more computing devices **2314** to communicate with the user interface **2304**, the manufacturing machine **2306**, the tooling production machine **2307**, and/or the management system **2308**. The communication network **2312** may include, for example, a local area network (LAN), a wide area network (WAN), SATCOM network, VHF network, a HF network, a Wi-Fi network, a WiMAX network, a gatelink network, and/or any other suitable communication network **2312** for transmitting and/or receiving data messages. The communication lines **2310** of communication network **2312** may include a data bus or a combination of wired and/or wireless communication links.

The management system **2308** may include a server **2330** and/or a data warehouse **2332**. As an example, at least a portion of the data **2324** may be stored in the data warehouse **2332**, and the server **2330** may be configured to transmit data **2324** from the data warehouse **2332** to the one or more computing devices **2314**, and/or to receive data **2324** from the one or more computing devices **2314** and to store the received data **2324** in the data warehouse **2332** for further purposes. The server **2330** and/or the data warehouse **2332** may be implemented as part of an acoustic core manufacturing system **2300** and/or the acoustic core configuration system **2302**. Additionally, or in the alternative, the server **2330** and/or the data warehouse **2332** may be implemented as part of a tooling assembly production system **2301** and/or the tooling assembly configuration system **2303**.

Any suitable additive manufacturing technology may be utilized to manufacture various aspects of the presently disclosed acoustic liners **100**. Exemplary additive manufacturing technologies include, but are not limited to: directed energy deposition (DED) systems, such as chemical vapor

deposition (CVD) systems, laser metal deposition (LMD) systems, directed metal deposition (DMD) systems, laser engineered net shape (LENS) systems, electron beam additive melting (EBAM) systems, or rapid plasma deposition (RPD) systems; powder bed fusion (PBF) systems, such as direct metal laser melting (DMLM) systems, electron beam melting (EBM) systems, directed metal laser sintering (DMLS) systems, selective laser melting (SLM) systems, or selective laser sintering (SLS) systems; laminated object manufacturing (LOM) systems, such as ultrasonic additive manufacturing (UAM) systems; mater extrusion (ME) systems, such as fused deposition modeling (FDM) systems or fused filament fabrication (FFF) systems; material jetting (MJ) systems, such as smooth curvatures printing (SCP) systems, multi-jet modeling (MJM) systems; and 3D printing, such as by inkjets and laserjets, including binder jetting (BJ) systems; photopolymer jetting (PJ) systems, stereolithographic (SLA) systems, and hybrid processes (HP).

Other suitable technologies that may be used to manufacture various aspects of the presently disclosed acoustic liners **100** include, without limitation, forming (e.g., rolling, stamping, joining, etc.), injection or compression molding, extruding (e.g., sheet extruding), subtractive manufacturing (e.g., machining, drilling, laser cutting, etc.), forging or casting, as well as a combination thereof, or any other manufacturing technology.

In the case of material extrusion, such as with a fused deposition modeling (FDM) system or a fused filament fabrication (FFF) system, the additive manufacturing material may be provided in the form of a filament. The filament may include a thermoplastic material, a metallic material, or a ceramic material, for example. In the case of material jetting (MJ), the additive manufacturing material may include a photosensitive material, such as a thermosetting material. The photosensitive material may be supplied in the form of a liquid, gel, or the like, and may solidify when exposed to an additive energy source such as ultraviolet light. In the case of binder jetting (BJ), the additive manufacturing material may include a binder material which is jetted into a bed of powder material. The binder material may be applied in the form of a liquid, gel, or the like. Exemplary binder materials include thermosetting materials or thermoplastic materials. Exemplary powder material for binder jetting (BJ) may include, for example, metal or metal alloys, thermoplastic materials, and ceramics. In the case of directed energy deposition (DED), the additive manufacturing material may be provided in the form of a wire, a filament, or powder. Exemplary material for directed energy deposition (DED) may include, for example, metal or metal alloys, thermoplastic materials, and ceramics.

Additive manufacturing technologies that utilize a beam of additive energy to solidify (e.g., melt, fuse, cure, etc.) an amorphous additive manufacturing material (e.g., a powder, a liquid, a gel, etc.) are sometimes referred to herein as additive energy technologies. Additive energy technologies include powder bed fusion (PBF) (e.g., selective laser sintering (SLS), direct metal laser sintering (SLM), laser melting (LM), electron beam melting (EBM), selective heat sintering (SHS), multi-jet fusion (MJF), etc.), and vat photopolymerization (e.g., stereolithography apparatus (SLA), digital light processing (DLP), scan, spin, and selectively photocure (3SP), continuous liquid interface production (CLIP), etc.). In the case of powder bed fusion (PBF), the additive manufacturing material may be provided in the form of a powder. Exemplary powder material for powder bed fusion (PBF), may include, for example, metal or metal alloys, polymeric materials (e.g., thermosetting materials and/or thermoplastic materials), and ceramics. In the case of vat photopolymerization, the additive manufacturing material may include a photosensitive material. Exemplary photosensitive materials that may be utilized with additive manufacturing technologies (e.g., additive material technologies or additive energy technologies) include a formulation containing, for example, a binder, a monomer, and a photoinitiator. Exemplary binders include styrenes, methacrylates, vinyl alcohols, olefins, clycerols, and propylenes. Exemplary monomers include acrylic acids, methacrylic acids, isodecyl acryalates, and N-vinyl pyrrolidone. Exemplary photoinitiators include free radical photoinitiators such as isopropylthioxanthone, benzophenone, and 2,2-azobi-zisobutyronitrile, and cationic photoinitiators such as diaryliodonium salts and triarylsulfonium salts.

An acoustic core **200** may be formed of polymeric materials (e.g., a thermoplastic material, a thermoset material, or an elastomeric polymer material), synthetic fibers, metal alloys, or composite materials, and may be formed as part of an additive manufacturing technology or any other suitable process, separately or concurrently with acoustic screen **202** and/or the back sheet **204**. Alternatively, an acoustic core **200** may be secured between the acoustic screen **202** and the back sheet **204** using an adhesive process. For example, a thermal, sonic, or electric welding process may be used. As another example, diffusion bonding may be used. Alternatively, an adhesive formulation such as a thermosetting or pressure sensitive adhesive or an adhesive tape may be used to secure the acoustic core **200** in position. Additionally, acoustic cores **200** may be formed from any other suitable technology and/or material, all of which are within the scope of the present disclosure.

Exemplary polymeric materials may include thermoplastic materials, and/or thermosetting materials. Exemplary thermosetting materials include, for example, epoxies, resins, acrylics, phenolics, polyesters, polyurethanes, polyimides, polyamide-imides (PAI), polysiloxanes bismaleimides, cyanate esters, phenolics, benzoxazines, phthalonitriles. Exemplary thermoplastic materials include, for example, acrylonitrile butadiene styrene (ABS), acrylonitrile styrene acrylate (ASA), styrene acrylonitrile (SAN), polyesters, polyamide-imides (PAI), polyetherimide (PEI), polyphenylsulfone (PPSF), polycarbonate (PC), polylactic acid (PLA), high-impact polystyrene (HIPS), thermoplastic polyurethane (TPU), aliphatic polyamides (nylon), polyaryletherketone (PAEK), polyetherketoneketone (PEKK), or polyether ether ketone (PEEK), as well as combinations thereof.

Exemplary synthetic fibers include extruded polymer filaments such as polyetherimide (PEI), acrylonitrile styrene acrylate (ASA), polyether ether ketone (PEEK), polycarbonate, acrylonitrile, acrylonitrile-butadiene-styrene, aramid fiber, meta-aramid fiber, para-aramid fiber, polyethylene fiber, rayon, polyester, or nylon, as well as combinations of these.

Exemplary metal alloys include aluminum alloys, steel alloys, titanium alloys, or nickel alloys (e.g., superalloys, such as austenitic nickel-chromium-based superalloys), as well as combinations of these.

Exemplary composite materials include ceramic matrix composite (CMC) materials and/or polymer matrix composite (PMC) materials. CMC materials include a ceramic matrix material and reinforcing fibers or cloth. Exemplary ceramic matrix materials include silicon carbide (SiC) and/or carbon (C). Exemplary CMC materials include carbon-fiber-reinforced carbon (C/C), carbon-fiber-reinforced silicon carbide (C/SiC), or silicon-carbide-reinforced silicon

carbide (SiC/SiC). PMC materials include a polymeric matrix material and reinforcing fibers or cloth. Exemplary PMC materials include fiber-reinforced plastics and advanced composites. Exemplary polymeric matrix materials include thermosets, such as epoxies, phenolics, polyurethanes, polyimides, bismaleimides, cyanate esters, phenolics, benzoxazines, phthalonitriles. In some embodiments, polyimides may be particularly suitable. Exemplary polyimides include phenylethynyl-terminated imide (PETI) oligomers, biphenyl dianhydride-based 2,2'-dimethylbenzidine, ultrahigh-temperature HFPE. In some embodiments, exemplary polyimides may include end caps, such as 4-phenylethynylphthalic anhydride (PEPA) and/or asymmetric oxydipththalic anhydride (a-ODPA) end caps.

Exemplary reinforcing fibers or cloth that may be utilized in CMC or PMC materials include carbon fibers, ceramic fibers, fiberglass, graphite fibers, and aramid fibers. Exemplary reinforcing fibers include monofilaments, yarns, chopped whiskers or fibers, and/or particles. In some embodiments, ceramic fibers may be formed of materials such a silicon carbide (SiC), carbon fiber (C), sapphire, alumina silicates, and/or oxides of Si, Al, Zr, Y, as well as combinations thereof. The reinforcing fibers may additionally include inorganic fillers, such as silica, quartz, pyrophyllite, wollastonite, mica, talc, kyanite, and/or montmorillonite, as well as combinations thereof.

The present disclosure provides numerous configurations for resonant cells **206** that may be included in an acoustic core **200**. It will be appreciated that numerous additional configurations are within the scope of the present disclosure. By way of example and without limitation, further aspects of the present disclosure are provided by the subject matter of the following clauses:

1. An acoustic liner, comprising: an acoustic core comprising an array of resonant cells, wherein respective ones of the resonant cells comprise one or more cell walls and a resonant space defined by the one or more cell walls, and wherein the array of resonant cells comprises: a plurality of partitioned resonant cells, respective ones of the plurality of partitioned resonant cells comprising a partition integrally formed with at least one of the corresponding one or more cell walls and transecting the corresponding resonant space with at least one surface of the partition having an interface angle that is oblique or perpendicular relative to a plane parallel to a top face and/or a bottom face of the array of resonant cells.
2. The acoustic liner of any clause herein, wherein the interface angle is from 5 degrees to 90 degrees as determined from a plane parallel to a bottom face and/or a top face of the array of resonant cells.
3. The acoustic liner of any clause herein, wherein the partition comprises at least one buttress integrally formed with at least one of the one or more cell walls.
4. The acoustic liner of any clause herein, wherein the partition transects the corresponding resonant space with a substantially uniform cross-sectional thickness.
5. The acoustic liner of any clause herein, wherein the partition comprises at least one surface having an interface angle of about zero degrees as determined from a plane parallel to a bottom face and/or a top face of the array of resonant cells.
6. The acoustic liner of any clause herein, wherein the partition transects the corresponding resonant space with a substantially uniform cross-sectional thickness, and wherein the partition has an interface angle of about 90 degrees as determined from a plane parallel to the bottom face and/or the top face.
7. The acoustic liner of any clause herein, wherein the partition corresponding to at least some of the plurality of resonant cells comprises one or more partition-apertures defining a pathway between an upper resonant space and a lower resonant space.
8. The acoustic liner of any clause herein, wherein the one or more partition-apertures defining the pathway between the upper resonant space and the lower resonant space comprises a partition-aperture array defining an array of pathways between the upper resonant space and the lower resonant space.
9. The acoustic liner of any clause herein, comprising: a plurality of oblique resonant cells, respective ones of the plurality of oblique resonant cells comprising at least one cell wall having one or more wall-apertures defining a pathway between an antecedent resonant space and a subsequent resonant space; wherein the plurality of oblique resonant cells have a cell angle of from 5 to 90 degrees as determined from a plane parallel to a bottom face and/or a top face of the array of resonant cells.
10. The acoustic liner of any clause herein, wherein the array of resonant cells comprises: a plurality of converging resonant cells and/or a plurality of diverging resonant cells.
11. The acoustic liner of any clause herein, comprising: a plurality of coupled resonant cells, respective ones of the plurality of coupled resonant cells comprising at least one cell wall having one or more wall-apertures defining a pathway between an antecedent resonant space and a subsequent resonant space.
12. The acoustic liner of any clause herein, comprising: wherein a cross-sectional dimension of the one or more wall-apertures defining the pathway between the antecedent resonant space and the subsequent resonant space is less than a cross-sectional dimension of the antecedent resonant space and/or a cross-sectional dimension of the subsequent resonant space, the cross-sectional dimension of the antecedent resonant space and/or the cross-sectional dimension of the subsequent resonant space determined adjacent to the one or more wall-apertures.
13. The acoustic liner of any clause herein, wherein the one or more wall-apertures defining the pathway between the antecedent resonant space and the subsequent resonant space comprises a partition-aperture array defining an array of pathways between the antecedent resonant space and the subsequent resonant space.
14. The acoustic liner of any clause herein, wherein the one or more wall-apertures defining the pathway between the antecedent resonant space and the subsequent resonant space are disposed proximal to the bottom face.
15. The acoustic liner of any clause herein, wherein the array of resonant cells comprises: a plurality of intermediate-frequency resonant cells, respective ones of the plurality of intermediate-frequency resonant cells situated between a corresponding at least two of the plurality of coupled resonant cells.
16. The acoustic liner of any clause herein, wherein the pathway between the antecedent resonant space and the subsequent resonant space transects a respective one of the plurality of intermediate-frequency resonant cells, the respective one of the plurality of intermediate-

frequency resonant cells comprising a partition separating the pathway from the intermediate resonant space.

17. The acoustic liner of any clause herein, wherein at least some of the resonant cells have a cross-sectional area that differs from one another, the cross-sectional area determined along a plane parallel to the top face and/or the bottom face.

18. The acoustic liner of any clause herein, wherein the array of resonant cells comprises one or more cell walls aligned along a linear or curvilinear trajectory that extends across a plurality of resonant cells; and/or wherein the array of resonant cells comprises one or more partitions aligned along a linear or curvilinear trajectory that extends across a plurality of resonant cells.

19. The acoustic liner of any clause herein, comprising: an acoustic screen, the acoustic screen being at least partially integrally formed with the corresponding one or more cell walls; and/or a back sheet, the back sheet being at least partially integrally formed with the corresponding one or more cell walls.

20. The acoustic liner of any clause herein, wherein the array of resonant cells is produced using an additive manufacturing technology.

21. An acoustic liner comprising an acoustic core of any clause herein.

22. An acoustic core, comprising: an array of resonant cells, wherein respective ones of the resonant cells comprise one or more cell walls and a resonant space defined by the one or more cell walls, and wherein the array of resonant cells comprises: a plurality of coupled resonant cells, respective ones of the plurality of coupled resonant cells comprising at least one cell wall having one or more wall-apertures defining a pathway between an antecedent resonant space and a subsequent resonant space; wherein a cross-sectional dimension of the one or more wall-apertures defining the pathway between the antecedent resonant space and the subsequent resonant space is less than a cross-sectional dimension of the antecedent resonant space and/or a cross-sectional dimension of the subsequent resonant space, the cross-sectional dimension of the antecedent resonant space and/or the cross-sectional dimension of the subsequent resonant space determined adjacent to the one or more wall-apertures.

23. The acoustic core of any clause herein, wherein the one or more wall-apertures defining the pathway between the antecedent resonant space and the subsequent resonant space comprises a partition-aperture array defining an array of pathways between the antecedent resonant space and the subsequent resonant space.

24. The acoustic core of any clause herein, wherein the one or more wall-apertures defining the pathway between the antecedent resonant space and the subsequent resonant space are disposed proximal to the bottom face.

25. The acoustic core of any clause herein, wherein the array of resonant cells comprises: a plurality of intermediate-frequency resonant cells, respective ones of the plurality of intermediate-frequency resonant cells situated at least partially adjacent to and/or at least partially surrounded by at least one of the plurality of coupled resonant cells.

26. The acoustic core of any clause herein, wherein the pathway between the antecedent resonant space and the subsequent resonant space transects a respective one of the plurality of intermediate-frequency resonant cells, the respective one of the plurality of intermediate-frequency resonant cells comprising a partition separating the pathway from the intermediate resonant space.

27. The acoustic core of any clause herein, wherein the partition separating the pathway from the intermediate resonant space delineates a medial resonant space that defines at least part of the pathway between the antecedent resonant space and the subsequent resonant space.

28. The acoustic core of any clause herein, wherein the intermediate-frequency resonant cells comprise a first cell wall that converges and/or adjoins with a second cell wall.

29. The acoustic core of any clause herein, wherein the array of resonant cells comprises: a plurality of converging resonant cells and/or a plurality of diverging resonant cells.

30. The acoustic core of any clause herein, wherein array of resonant cells comprises at least some oblique resonant cells.

31. The acoustic core of any clause herein, wherein the oblique resonant cells have a cell angle of from 5 to 90 degrees as determined from a plane parallel to a bottom face and/or a top face of the array of resonant cells.

32. The acoustic core of any clause herein, comprising: a plurality of partitioned resonant cells, respective ones of the plurality of partitioned resonant cells comprising a partition transecting the corresponding resonant space, the partition being integrally formed with at least one of the corresponding one or more cell walls.

33. The acoustic core of any clause herein, wherein the partition transects the corresponding resonant space with at least one surface of the partition having an interface angle that is oblique or perpendicular relative to a plane parallel to a top face and/or a bottom face of the array of resonant cells.

34. The acoustic core of any clause herein, wherein the interface angle is from 5 degrees to 90 degrees as determined from a plane parallel to a bottom face and/or a top face of the array of resonant cells.

35. The acoustic core of any clause herein, wherein the partition comprises at least one buttress integrally formed with at least one of the one or more cell walls.

36. The acoustic core of any clause herein, wherein the partition transects the corresponding resonant space with a substantially uniform cross-sectional thickness.

37. The acoustic core of any clause herein, wherein the partition transects the corresponding resonant space with a substantially uniform cross-sectional thickness, and wherein the partition has an interface angle of about zero degrees as determined from a plane parallel to the bottom face and/or the top face.

38. The acoustic core of any clause herein, wherein the partition corresponding to at least some of the plurality of resonant cells comprises one or more partition-apertures defining a pathway between the upper resonant space and the lower resonant space.

39. The acoustic core of any clause herein, wherein at least some of the resonant cells have a cross-sectional area that differs from one another, the cross-sectional area determined along a plane parallel to the top face and/or the bottom face.

40. The acoustic core of any clause herein, wherein the array of resonant cells comprises one or more cell walls

aligned along a linear or curvilinear trajectory that extends across a plurality of resonant cells; and/or wherein the array of resonant cells comprises one or more partitions aligned along a linear or curvilinear trajectory that extends across a plurality of resonant cells.

41. The acoustic core of any clause herein, wherein the array of resonant cells is produced using an additive manufacturing technology.

42. An acoustic core, comprising: an array of resonant cells, comprising: a plurality of coupled resonant cells, respective ones of the plurality of coupled resonant cells defining an antecedent resonant space and a subsequent resonant space and comprising at least one cell wall having one or more wall-apertures defining a pathway between the antecedent resonant space and the subsequent resonant space; and a plurality of high-frequency resonant cells respectively defining a high-frequency resonant space, respective ones of the plurality of high-frequency resonant cells being matched with respective ones of the plurality of coupled resonant cells.

43. The acoustic core of any clause herein, wherein a cross-sectional dimension of the one or more wall-apertures defining the pathway between the antecedent resonant space and the subsequent resonant space is less than a cross-sectional dimension of the antecedent resonant space and/or a cross-sectional dimension of the subsequent resonant space, the cross-sectional dimension of the antecedent resonant space and/or the cross-sectional dimension of the subsequent resonant space determined adjacent to the one or more wall-apertures.

44. The acoustic core of any clause herein, wherein the plurality of coupled resonant cells and/or the plurality of high-frequency resonant cells comprise a plurality of oblique resonant cells.

45. The acoustic core of any clause herein, wherein respective ones of the plurality of coupled resonant cells comprising have an aperture reduction factor of from 0.2 to less than 1.0, the aperture reduction factor relating the cross-sectional dimension of the one or more wall-apertures to the cross-sectional dimension of the antecedent resonant space and/or the cross-sectional dimension of the subsequent resonant space according to the relationship: $a=c(1-\beta)$, where β is the aperture reduction factor, "a" is the cross-sectional dimension of the one or more wall-apertures, and "c" is the cross-sectional dimension of the antecedent resonant space and/or the cross-sectional dimension of the subsequent resonant space.

46. The acoustic core of any clause herein, comprising: a plurality of partitioned resonant cells, respective ones of the plurality of partitioned resonant cells comprising a partition transecting a corresponding resonant space of the partitioned resonant cell at an interface angle that is oblique or perpendicular relative to a plane parallel to a top face and/or a bottom face of the array of resonant cells.

47. The acoustic core of any clause herein, wherein the subsequent resonant space of at least some of the plurality of coupled resonant cells defines a lower resonant space of at least some of the plurality of partitioned resonant cells, and/or wherein at least some of the high-frequency resonant cells define an upper resonant space of at least some of the plurality of partitioned resonant cells.

48. The acoustic core of any clause herein, comprising: a plurality intermediate-frequency resonant cells respectively defining an intermediate-frequency resonant space, respective ones of the plurality of intermediate-frequency resonant cells being matched with respective ones of the plurality of coupled resonant cells and/or respective ones of the plurality of high-frequency resonant cells, wherein at least some of the intermediate-frequency resonant cells define an upper resonant space of at least some of the plurality of partitioned resonant cells.

49. An acoustic core, comprising: an array of resonant cells, the array of resonant cells comprising a plurality of resonant cell groups, respective ones of the resonant cell groups comprising a plurality of resonant cells, at least some of the plurality of resonant cells comprising: a partitioned resonant cell comprising a converging resonant cell and a diverging resonant cell, the converging resonant cell and the diverging resonant cell defined by a plurality of cell walls integrally formed with one another and a partition integrally formed with the plurality of cell walls, the partition at least partially delimiting the converging resonant cell from the diverging resonant cell; wherein the converging resonant cell defines an upper resonant space delimited by the partition and a top face of the array of resonant cells, and wherein the diverging resonant cell defines a lower resonant space delimited by the partition and a bottom face of the array of resonant cells.

50. The acoustic core of any clause herein, wherein at least some of the plurality of resonant cells comprise: a diverging resonant cell delimited by the top face and the bottom face; and/or a converging resonant cell delimited by the top face and the bottom face.

51. The acoustic core of any clause herein, wherein the acoustic core has a curvilinear profile defined by the top face and/or the bottom face.

52. The acoustic core of any clause herein, wherein the curvilinear profile comprises a convex curvilinear profile and/or a concave curvilinear profile.

53. The acoustic core of any clause herein, wherein the array of resonant cells comprises a plurality of diverging resonant cells defined by the top face and the bottom face at a location where the acoustic core has a convex curvilinear profile; and/or wherein the array of resonant cells comprises a plurality of converging resonant cells defined by the top face and the bottom face at a location where the acoustic core has a concave curvilinear profile.

54. The acoustic core of any clause herein, wherein at least some of the plurality of resonant cells comprise: a coupled resonant cell, the coupled resonant cell defining a coupled resonant space comprising an antecedent resonant space and a subsequent resonant space, and the coupled resonant cell comprising at least one cell wall having one or more wall-apertures defining a pathway between the antecedent resonant space and the subsequent resonant space; wherein the coupled resonant cell is configured as a diverging resonant cell, the coupled resonant cell located at portion of the acoustic core that has a concave curvilinear profile; or wherein the coupled resonant cell is configured as a converging resonant cell, the coupled resonant cell located at a portion of the acoustic core that has a convex curvilinear profile.

55. The acoustic core of any clause herein, wherein the converging resonant cell is configured as a high-fre-

quency resonant cell defining a high-frequency resonant space, the high-frequency resonant cell being matched with the coupled resonant cell.

56. The acoustic core of any clause herein, wherein at least some of the plurality of resonant cells comprise: an intermediate-frequency resonant cell defining an intermediate-frequency resonant space, the intermediate-frequency resonant space delimited by the top face and an additional partition, the additional partition separating the intermediate-frequency resonant space from the coupled resonant space; wherein the intermediate-frequency resonant cell is configured as a converging resonant cell.

57. The acoustic core of any clause herein, wherein the converging resonant cell exhibits a convergence angle relative to a longitudinal axis of the converging resonant cell of from 0.5 degrees to 30 degrees; and/or wherein the diverging resonant cell exhibits a convergence angle relative to a longitudinal axis of the diverging resonant cell of from −0.5 degrees to −30 degrees.

58. The acoustic core of any clause herein, wherein the acoustic core comprises an injection molded acoustic core, or wherein the acoustic core comprises a press-formed acoustic core, or wherein the acoustic core comprises an additively manufactured acoustic core.

59. The acoustic core of any clause herein, wherein the converging resonant cell is realized at least in part by a cross-sectional thickness of one or more cell walls and/or at least in part by an angle or orientation of one or more cell walls; and/or wherein the diverging resonant cell is realized at least in part by a cross-sectional thickness of one or more cell walls and/or at least in part by an angle or orientation of one or more cell walls.

60. A method of making an acoustic core, the method comprising: determining, with an acoustic core configuration system, a configuration for an acoustic core comprising an array of resonant cells, wherein determining the configuration for the acoustic core comprises: determining a configuration for a plurality of coupled resonant cells, respective ones of the plurality of coupled resonant cells defining an antecedent resonant space and a subsequent resonant space and comprising at least one cell wall having one or more wall-apertures defining a pathway between the antecedent resonant space and the subsequent resonant space; and determining a configuration for a plurality of high-frequency resonant cells respectively defining a high-frequency resonant space, respective ones of the plurality of high-frequency resonant cells being matched with respective ones of the plurality of coupled resonant cells.

61. The method of any clause herein, wherein a cross-sectional dimension of the one or more wall-apertures defining the pathway between the antecedent resonant space and the subsequent resonant space is less than a cross-sectional dimension of the antecedent resonant space and/or a cross-sectional dimension of the subsequent resonant space, the cross-sectional dimension of the antecedent resonant space and/or the cross-sectional dimension of the subsequent resonant space determined adjacent to the one or more wall-apertures.

62. The method of any clause herein, comprising: determining a resonant frequency of low-frequency sound waves desired to be attenuated, and tuning the plurality of coupled resonant cells to the resonant frequency of the low-frequency sound waves desired to be attenuated, wherein the resonant length of respective ones of the plurality of coupled resonant cells exceeds the height of the acoustic core; and/or determining a resonant frequency of high-frequency sound waves desired to be attenuated, and tuning the plurality of high-frequency resonant cells to the resonant frequency of the high-frequency sound waves desired to be attenuated, wherein the resonant length of respective ones of the plurality of high-frequency resonant cells exceeds the height of the respective high-frequency resonant cell.

63. The method of any clause herein, wherein the resonant length of respective ones of the plurality of coupled resonant cells exceeds the height of the acoustic core at least in part by the cross-sectional dimension of the one or more wall-apertures defining the pathway between the antecedent resonant space and the subsequent resonant space being less than the cross-sectional dimension of the antecedent resonant space and/or the cross-sectional dimension of the subsequent resonant space.

64. The method of any clause herein, wherein determining the configuration for the plurality of coupled resonant cells comprises: determining a cross-sectional dimension of the one or more wall-apertures defining the pathway between the antecedent resonant space and the subsequent resonant space of respective ones of the plurality of coupled resonant cells based at least in part on an aperture reduction factor; and/or determining a cross-sectional dimension of the antecedent resonant space and/or a cross-sectional dimension of the subsequent resonant space of respective ones of the plurality of coupled resonant cells based at least in part on the aperture reduction factor; wherein the aperture reduction factor is determined based at least in part on a relationship between the aperture reduction factor and a resonant frequency of respective ones of the plurality of coupled resonant cells.

65. The method of any clause herein, wherein determining the configuration for the plurality of coupled resonant cells comprises: determining an aperture reduction factor for respective ones of the plurality of coupled resonant cells, the aperture reduction factor determined based at least in part on a relationship between the aperture reduction factor and a resonant frequency of respective ones of the plurality of coupled resonant cells.

66. The method of any clause herein, wherein the relationship between the aperture reduction factor and a resonant frequency of respective ones of the plurality of coupled resonant cells comprises a decreasing resonant frequency with increasing aperture reduction factor.

67. The method of any clause herein, wherein the determined aperture reduction factor is from 0.5 to less than 1.0.

68. The method of any clause herein, wherein the determined aperture reduction factor relates the cross-sectional dimension of the one or more wall-apertures to the cross-sectional dimension of the antecedent resonant space and/or the cross-sectional dimension of the subsequent resonant space according to the relationship: $a=c(1-\beta)$, where β is the aperture reduction factor, "a" is the cross-sectional dimension of the one or more wall-apertures, and "c" is the cross-sectional dimension of the antecedent resonant space and/or the cross-sectional dimension of the subsequent resonant space.

60. The method of any clause herein, wherein the relationship between the aperture reduction factor and a

resonant frequency of respective ones of the plurality of coupled resonant cells comprises a non-linear region, and wherein the determined aperture reduction factor corresponds to the non-linear region.

70. The method of any clause herein, wherein determining the configuration for the acoustic core comprises: determining a configuration for a plurality of partitioned resonant cells, respective ones of the plurality of partitioned resonant cells comprising a partition transecting a corresponding resonant space of the partitioned resonant cell with at least one surface of the partition having an interface angle that is oblique or perpendicular relative to a plane parallel to a top face and/or a bottom face of the array of resonant cells.

71. The method of any clause herein, wherein the subsequent resonant space of at least some of the plurality of coupled resonant cells defines a lower resonant space of at least some of the plurality of partitioned resonant cells; and/or wherein the high-frequency resonant space of at least some of the high-frequency resonant cells defines an upper resonant space of at least some of the plurality of partitioned resonant cells.

72. The method of any clause herein, wherein the plurality of coupled resonant cells comprise a plurality of oblique resonant cells, wherein the plurality of oblique resonant cells have a cell angle of from 5 to 90 degrees as determined from a plane parallel to a bottom face and/or a top face of the array of resonant cells.

73. The method of any clause herein, wherein the array of resonant cells comprises: a plurality of converging resonant cells and/or a plurality of diverging resonant cells.

74. The method of any clause herein, wherein respective ones of the plurality of high-frequency resonant cells being matched with respective ones of the plurality of coupled resonant cells comprises respective ones of the plurality of high-frequency resonant cells being geometrically fit with respective ones of the plurality of coupled resonant cells.

75. The method of any clause herein, wherein determining the configuration for the acoustic core comprises: determining a configuration for a plurality intermediate-frequency resonant cells respectively defining an intermediate-frequency resonant space, respective ones of the plurality of intermediate-frequency resonant cells being matched with respective ones of the plurality of coupled resonant cells and/or respective ones of the plurality of high-frequency resonant cells.

76. The method of any clause herein, comprising: determining a resonant frequency of intermediate-frequency sound waves desired to be attenuated, and tuning the plurality of intermediate-frequency resonant cells to the resonant frequency of the intermediate-frequency sound waves desired to be attenuated, wherein the resonant length of respective ones of the plurality of intermediate-frequency resonant cells exceeds the height of the respective intermediate-frequency resonant cell.

77. The method of any clause herein, wherein the intermediate-frequency resonant space of at least some of the intermediate-frequency resonant cells defines an upper resonant space of at least some of the plurality of partitioned resonant cells.

78. The method of any clause herein, wherein the array of resonant cells comprises one or more cell walls aligned along a linear or curvilinear trajectory that extends across a plurality of resonant cells; and/or wherein the array of resonant cells comprises one or more partitions aligned along a linear or curvilinear trajectory that extends across a plurality of resonant cells.

79. The method of any clause herein, comprising: producing the acoustic core using an additive manufacturing technology.

80. The method of any clause herein, wherein the method is configured to make the acoustic core of any clause herein.

81. The method of any clause herein, wherein the method is configured to make the acoustic liner of any clause herein.

82. A method of forming an acoustic core, the method comprising: determining, with a tooling assembly configuration system, a configuration for a tooling assembly and/or a configuration for one or more forming tools for use in the tooling assembly; making the one or more forming tools and/or assembling a tooling assembly that includes the one or more forming tools; and forming the acoustic core using the tooling assembly that includes the one or more forming tools; wherein the tooling assembly and/or the one or more forming tools have a configuration determined based at least in part on a configuration determined for the acoustic core; wherein the acoustic core comprises: an array of resonant cells, the array of resonant cells comprising a plurality of resonant cell groups, respective ones of the resonant cell groups comprising a plurality of resonant cells, at least some of the plurality of resonant cells comprising: a partitioned resonant cell comprising a converging resonant cell and a diverging resonant cell, the converging resonant cell and the diverging resonant cell defined by a plurality of cell walls integrally formed with one another and a partition integrally formed with the plurality of cell walls, the partition at least partially delimiting the converging resonant cell from the diverging resonant cell; wherein the converging resonant cell defines an upper resonant space delimited by the partition and a top face of the array of resonant cells, and wherein the diverging resonant cell defines a lower resonant space delimited by the partition and a bottom face of the array of resonant cells.

83. The method of any clause herein, comprising: forming an acoustic liner at least in part by attaching an acoustic screen and the acoustic core to one another, and/or at least in part by attaching a back sheet and the acoustic screen to one another.

84. The method of any clause herein, comprising: forming the acoustic screen and/or forming the back sheet.

85. The method of any clause herein, comprising: determining, with an acoustic core configuration system, a configuration for the acoustic core.

86. The method of any clause herein, wherein determining the configuration for the acoustic core comprises: determining a configuration for a plurality of coupled resonant cells, respective ones of the plurality of coupled resonant cells defining an antecedent resonant space and a subsequent resonant space and comprising at least one cell wall having one or more wall-apertures defining a pathway between the antecedent resonant space and the subsequent resonant space; and determining a configuration for a plurality of high-frequency resonant cells respectively defining a high-frequency resonant space, respective ones of the plurality of high-frequency resonant cells being matched with respective ones of the plurality of coupled resonant cells.

87. A tooling assembly for forming an acoustic core, the tooling assembly comprising: a plurality of forming tools, respective ones of the plurality of forming tools comprising a support member and a plurality of forming elements coupled to the support member; wherein when the plurality of forming tools are in operating proximity to one another, a mold cavity defined at least in part by the plurality of forming elements corresponds to an acoustic core to be formed by the tooling assembly; wherein the acoustic core comprises: an array of resonant cells, the array of resonant cells comprising a plurality of resonant cell groups, respective ones of the resonant cell groups comprising a plurality of resonant cells, at least some of the plurality of resonant cells comprising: a partitioned resonant cell comprising a converging resonant cell and a diverging resonant cell, the converging resonant cell and the diverging resonant cell defined by a plurality of cell walls integrally formed with one another and a partition integrally formed with the plurality of cell walls, the partition at least partially delimiting the converging resonant cell from the diverging resonant cell; wherein the converging resonant cell defines an upper resonant space delimited by the partition and a top face of the array of resonant cells, and wherein the diverging resonant cell defines a lower resonant space delimited by the partition and a bottom face of the array of resonant cells.

88. The tooling assembly of any clause herein, wherein the plurality of forming elements have a draft angle such that a cross-sectional dimension of the respective forming element decreases from a cross-sectional dimension proximal to the support member to a cross-sectional dimension distal from the support member.

89. The tooling assembly of any clause herein, wherein the draft angle of the respective ones of the plurality of forming elements allow for an acoustic core formed using the tooling assembly to exhibit good release from the respective ones of the plurality of forming tools.

90. The tooling assembly of any clause herein, wherein the draft angle is provided by one or more dimensions of the resonant cells of the acoustic core configured to be formed by the tooling assembly.

91. The tooling assembly of any clause herein, wherein at least some of the resonant cells of the acoustic core have a convergence angle that corresponds to the draft angle of the respective forming elements and/or wherein at least some of the resonant cells of the acoustic core have a convergence angle that differs from the draft angle of the respective forming elements.

92. The tooling assembly of any clause herein, wherein the draft angle is from about 0.5 degrees to about 10 degrees.

93. The tooling assembly of any clause herein, wherein the tooling assembly comprises an injection molding assembly, or wherein the tooling assembly comprises a compression molding assembly, or wherein the tooling assembly comprises a press-forming assembly.

94. The tooling assembly of any clause herein, wherein the tooling assembly is configured to form an acoustic core that has a curvilinear profile.

95. The tooling assembly of any clause herein, wherein the plurality of forming tools comprise one or more sprue elements through which a moldable material may be injected into the mold cavity.

96. The tooling assembly of any clause herein, wherein the plurality of forming tools respectively comprise one or more ejector pins, the one or more ejector pins respectively extensible through the respective support member and/or through a respective forming element, the one or more ejector pins configured to push an acoustic core formed using the tooling assembly away from the respective forming tool and/or out of the mold cavity.

97. The tooling assembly of any clause herein, wherein at least one of the one or more ejector pins, when actuated, push against a support element of a corresponding counterpart one of the plurality of forming tools; and/or wherein at least one of the one or more ejector pins, when actuated, push against a partition of a partitioned resonant cell formed by the tooling assembly.

98. The tooling assembly of any clause herein, wherein at least one of the plurality of forming tools comprises one or more forming elements that has a protrusion extending from a body portion of the respective forming element, the protrusion configured to form a partition-aperture in a partition of a partitioned resonant cell formed by the tooling assembly, the protrusion coming into proximity and/or contact with a corresponding counterpart forming tool when forming the acoustic core.

99. The tooling assembly of any clause herein, wherein the tooling assembly is configured to form an acoustic core of any clause herein.

100. An acoustic core configuration system, wherein the acoustic core configuration system is configured to determine a configuration for an acoustic core of any clause herein, such as in accordance with the method of any clause herein.

101. A tooling assembly configuration system, wherein the tooling assembly configuration system is configured to determine a configuration for a tooling assembly of any clause herein, such as in accordance with the method of any clause herein.

102. A computer-readable medium comprising computer-executable instructions, which when executed by a processor, cause the processor to perform a method comprising: determining a configuration for an acoustic core comprising an array of resonant cells, wherein determining the configuration for the acoustic core comprises: determining a configuration for a plurality of coupled resonant cells, respective ones of the plurality of coupled resonant cells defining an antecedent resonant space and a subsequent resonant space and comprising at least one cell wall having one or more wall-apertures defining a pathway between the antecedent resonant space and the subsequent resonant space; and determining a configuration for a plurality of high-frequency resonant cells respectively defining a high-frequency resonant space, respective ones of the plurality of high-frequency resonant cells being matched with respective ones of the plurality of coupled resonant cells.

103. A computer-readable medium comprising computer-executable instructions, which when executed by a processor, cause the processor to perform a method comprising: determining, with a tooling assembly configuration system, a configuration for a tooling assembly and/or a configuration for one or more forming tools for use in the tooling assembly; making the one or more forming tools and/or assembling a tooling assembly that includes the one or more forming tools; and forming the acoustic core using the tooling assembly that includes the one or more forming tools; wherein the tooling assembly and/or the one or more forming

tools have a configuration determined based at least in part on a configuration determined for the acoustic core; wherein the acoustic core comprises: an array of resonant cells, the array of resonant cells comprising a plurality of resonant cell groups, respective ones of the resonant cell groups comprising a plurality of resonant cells, at least some of the plurality of resonant cells comprising: a partitioned resonant cell comprising a converging resonant cell and a diverging resonant cell, the converging resonant cell and the diverging resonant cell defined by a plurality of cell walls integrally formed with one another and a partition integrally formed with the plurality of cell walls, the partition at least partially delimiting the converging resonant cell from the diverging resonant cell; wherein the converging resonant cell defines an upper resonant space delimited by the partition and a top face of the array of resonant cells, and wherein the diverging resonant cell defines a lower resonant space delimited by the partition and a bottom face of the array of resonant cells.

104. The computer-readable medium of any clause herein, wherein the computer-readable medium comprises computer-executable instructions, which when executed by a processor, cause the processor to perform the method of any clause herein.

105. A tooling assembly for forming an acoustic core, the tooling assembly comprising: a plurality of forming tools, respective ones of the plurality of forming tools comprising a support member and a plurality of forming elements coupled to the support member; wherein when the plurality of forming tools are in operating proximity to one another, a mold cavity defined at least in part by the plurality of forming elements corresponds to an acoustic core to be formed by the tooling assembly; wherein the acoustic core comprises: an array of resonant cells, the array of resonant cells comprising a plurality of resonant cell groups, respective ones of the resonant cell groups comprising a plurality of resonant cells, at least some of the plurality of resonant cells comprising: a partitioned resonant cell comprising a first converging resonant cell and a first diverging resonant cell, the first converging resonant cell and the first diverging resonant cell defined by a plurality of cell walls integrally formed with one another and a partition integrally formed with the plurality of cell walls, the partition at least partially delimiting the first converging resonant cell from the first diverging resonant cell; wherein the first converging resonant cell defines an upper resonant space delimited by the partition and a top face of the array of resonant cells, and wherein the first diverging resonant cell defines a lower resonant space delimited by the partition and a bottom face of the array of resonant cells; wherein at least some of the plurality of resonant cells comprise: a coupled resonant cell, the coupled resonant cell defining a coupled resonant space comprising an antecedent resonant space and a subsequent resonant space, and the coupled resonant cell comprising at least one cell wall having one or more wall-apertures defining a pathway between the antecedent resonant space and the subsequent resonant space; and wherein the coupled resonant cell is configured as a second diverging resonant cell, the coupled resonant cell located at portion of the acoustic core that has a concave curvilinear profile; or wherein the coupled resonant cell is configured as a second converging resonant cell, the coupled resonant cell located at a portion of the acoustic core that has a curvilinear profile.

106. The tooling assembly of any clause herein, wherein the plurality of forming elements have a draft angle such that a cross-sectional dimension of the respective forming element decreases from a cross-sectional dimension proximal to the support member to a cross-sectional dimension distal from the support member.

107. The tooling assembly of any clause herein, wherein the draft angle of the respective ones of the plurality of forming elements allow for the acoustic core formed using the tooling assembly to release from the respective ones of the plurality of forming tools.

108. The tooling assembly of any clause herein, wherein the draft angle is provided by one or more dimensions of the resonant cells of the acoustic core configured to be formed by the tooling assembly.

109. The tooling assembly of any clause herein, wherein at least some of the resonant cells of the acoustic core have a convergence angle that corresponds to the draft angle of the respective forming elements and/or wherein at least some of the resonant cells of the acoustic core have a convergence angle that differs from the draft angle of the respective forming elements.

110. The tooling assembly of any clause herein, wherein the draft angle is from about 0.5 degrees to about 10 degrees.

111. The tooling assembly of any clause herein, wherein the tooling assembly comprises an injection molding assembly, or wherein the tooling assembly comprises a compression molding assembly, or wherein the tooling assembly comprises a press-forming assembly.

112. The tooling assembly of any clause herein, wherein the tooling assembly is configured to form an acoustic core that has a curvilinear profile.

113. The tooling assembly of any clause herein, wherein the plurality of forming tools comprise one or more sprue elements through which a moldable material may be injected into the mold cavity.

114. The tooling assembly of any clause herein, wherein the plurality of forming tools respectively comprise one or more ejector pins, the one or more ejector pins respectively extensible through the respective support member and/or through a respective forming element, the one or more ejector pins configured to push an acoustic core formed using the tooling assembly away from the respective forming tool and/or out of the mold cavity.

115. The tooling assembly of any clause herein, wherein at least some of the plurality of resonant cells comprise: a third diverging resonant cell delimited by the top face and the bottom face; and/or a third converging resonant cell delimited by the top face and the bottom face.

116. The tooling assembly of any clause herein, wherein the curvilinear profile is defined by the top face and/or the bottom face.

117. The tooling assembly of any clause herein, wherein the curvilinear profile comprises a convex curvilinear profile and/or a concave curvilinear profile.

118. The tooling assembly of any clause herein, wherein the array of resonant cells comprises a plurality of third diverging resonant cells defined by the top face and the bottom face at a location where the acoustic core has a convex curvilinear profile; and/or wherein the array of resonant cells comprises a plurality of third converging

resonant cells defined by the top face and the bottom face at a location where the acoustic core has a concave curvilinear profile.

119. The tooling assembly of any clause herein, wherein the first converging resonant cell is configured as a high-frequency resonant cell defining a high-frequency resonant space, the high-frequency resonant cell being matched with the coupled resonant cell.

120. The tooling assembly of any clause herein, wherein at least some of the plurality of resonant cells comprise: a first intermediate-frequency resonant cell defining an intermediate-frequency resonant space, the intermediate-frequency resonant space delimited by the top face and an additional partition, the additional partition separating the intermediate-frequency resonant space from the coupled resonant space; and wherein the first intermediate-frequency resonant cell is configured as a converging resonant cell.

121. The tooling assembly of any clause herein, wherein the first converging resonant cell exhibits a convergence angle relative to a longitudinal axis of the first converging resonant cell of from 0.5 degrees to 30 degrees; and/or wherein the first diverging resonant cell exhibits a convergence angle relative to a longitudinal axis of the first diverging resonant cell of from −0.5 degrees to −30 degrees.

122. The tooling assembly of any clause herein, wherein the acoustic core comprises an injection molded acoustic core, or wherein the acoustic core comprises a press-formed acoustic core, or wherein the acoustic core comprises an additively manufactured acoustic core.

123. The tooling assembly of any clause herein, wherein the first converging resonant cell is realized at least in part by a cross-sectional thickness of one or more cell walls and/or at least in part by an angle or orientation of one or more cell walls; and/or wherein the first diverging resonant cell is realized at least in part by a cross-sectional thickness of one or more cell walls and/or at least in part by an angle or orientation of one or more cell walls.

124. A method of forming an acoustic core, the method comprising: determining, with a tooling assembly configuration system, a configuration for a tooling assembly and/or a configuration for one or more forming tools for use in the tooling assembly; making the one or more forming tools and/or assembling a tooling assembly that includes the one or more forming tools; and forming the acoustic core using the tooling assembly that includes the one or more forming tools; wherein the tooling assembly and/or the one or more forming tools have a configuration determined based at least in part on a configuration determined for the acoustic core; wherein the acoustic core comprises: an array of resonant cells, the array of resonant cells comprising a plurality of resonant cell groups, respective ones of the resonant cell groups comprising a plurality of resonant cells, at least some of the plurality of resonant cells comprising: a partitioned resonant cell comprising a first converging resonant cell and a first diverging resonant cell, the first converging resonant cell and the first diverging resonant cell defined by a plurality of cell walls integrally formed with one another and a partition integrally formed with the plurality of cell walls, the partition at least partially delimiting the first converging resonant cell from the first diverging resonant cell; wherein the first converging resonant cell defines an upper resonant space delimited by the partition and a top face of the array of resonant cells, and wherein the first diverging resonant cell defines a lower resonant space delimited by the partition and a bottom face of the array of resonant cells; wherein at least some of the plurality of resonant cells comprise: a coupled resonant cell, the coupled resonant cell defining a coupled resonant space comprising an antecedent resonant space and a subsequent resonant space, and the coupled resonant cell comprising at least one cell wall having one or more wall-apertures defining a pathway between the antecedent resonant space and the subsequent resonant space; and wherein the coupled resonant cell is configured as a second diverging resonant cell, the coupled resonant cell located at portion of the acoustic core that has a concave curvilinear profile; or wherein the coupled resonant cell is configured as a second converging resonant cell, the coupled resonant cell located at a portion of the acoustic core that has a curvilinear profile.

This written description uses exemplary embodiments to describe the presently disclosed subject matter, including the best mode, and also to enable any person skilled in the art to practice such subject matter, including making and using any devices or systems and performing any incorporated methods. The patentable scope of the presently disclosed subject matter is defined by the claims, and may include other examples that occur to those skilled in the art. Such other examples are intended to be within the scope of the claims if they include structural elements that do not differ from the literal language of the claims, or if they include equivalent structural elements with insubstantial differences from the literal languages of the claims.

What is claimed is:

1. A tooling assembly for forming an acoustic core, the tooling assembly comprising:

a plurality of forming tools, respective ones of the plurality of forming tools comprising a support member and a plurality of forming elements coupled to the support member;

wherein when the plurality of forming tools are in operating proximity to one another, a mold cavity defined at least in part by the plurality of forming elements corresponds to an acoustic core to be formed by the tooling assembly;

wherein the acoustic core comprises:

an array of resonant cells, the array of resonant cells comprising

a plurality of resonant cell groups, respective ones of the resonant cell groups comprising a plurality of resonant cells, at least some of the plurality of resonant cells comprising:

a partitioned resonant cell comprising a first converging resonant cell and a first diverging resonant cell, the first converging resonant cell and the first diverging resonant cell defined by a plurality of cell walls integrally formed with one another and a partition integrally formed with the plurality of cell walls, the partition at least partially delimiting the first converging resonant cell from the first diverging resonant cell;

wherein the first converging resonant cell defines an upper resonant space delimited by the partition and a top face of the array of resonant cells, and wherein the first diverging resonant cell defines a lower resonant space delimited by the partition and a bottom face of the array of resonant cells;

wherein at least some of the plurality of resonant cells comprise:

a coupled resonant cell, the coupled resonant cell defining a coupled resonant space comprising an antecedent resonant space and a subsequent resonant space, and the coupled resonant cell comprising at least one cell wall having one or more wall-apertures defining a pathway between the antecedent resonant space and the subsequent resonant space; and

wherein the coupled resonant cell is configured as a second diverging resonant cell, the coupled resonant cell located at portion of the acoustic core that has a concave curvilinear profile; or

wherein the coupled resonant cell is configured as a second converging resonant cell, the coupled resonant cell located at a portion of the acoustic core that has a curvilinear profile.

2. The tooling assembly of claim **1**, wherein the plurality of forming elements have a draft angle such that a cross-sectional dimension of the respective forming element decreases from a cross-sectional dimension proximal to the support member to a cross-sectional dimension distal from the support member.

3. The tooling assembly of claim **2**, wherein the draft angle of the respective ones of the plurality of forming elements allow for the acoustic core formed using the tooling assembly to release from the respective ones of the plurality of forming tools.

4. The tooling assembly of claim **2**, wherein the draft angle is provided by one or more dimensions of the resonant cells of the acoustic core configured to be formed by the tooling assembly.

5. The tooling assembly of claim **2**, wherein at least some of the resonant cells of the acoustic core have a convergence angle that corresponds to the draft angle of the respective forming elements and/or wherein at least some of the resonant cells of the acoustic core have a convergence angle that differs from the draft angle of the respective forming elements.

6. The tooling assembly of claim **2**, wherein the draft angle is from about 0.5 degrees to about 10 degrees.

7. The tooling assembly of claim **1**, wherein the tooling assembly comprises an injection molding assembly, or wherein the tooling assembly comprises a compression molding assembly, or wherein the tooling assembly comprises a press-forming assembly.

8. The tooling assembly of claim **1**, wherein the tooling assembly is configured to form an acoustic core that has a curvilinear profile.

9. The tooling assembly of claim **1**, wherein the plurality of forming tools comprise one or more sprue elements through which a moldable material may be injected into the mold cavity.

10. The tooling assembly of claim **1**, wherein the plurality of forming tools respectively comprise one or more ejector pins, the one or more ejector pins respectively extensible through the respective support member and/or through a respective forming element, the one or more ejector pins configured to push an acoustic core formed using the tooling assembly away from the respective forming tool and/or out of the mold cavity.

11. The tooling assembly of claim **1**, wherein at least some of the plurality of resonant cells comprise:

a third diverging resonant cell delimited by the top face and the bottom face; and/or

a third converging resonant cell delimited by the top face and the bottom face.

12. The tooling assembly of claim **1**, wherein the curvilinear profile is defined by the top face and/or the bottom face.

13. The tooling assembly of claim **12**, wherein the curvilinear profile comprises a convex curvilinear profile and/or a concave curvilinear profile.

14. The tooling assembly of claim **13**, wherein the array of resonant cells comprises a plurality of third diverging resonant cells defined by the top face and the bottom face at a location where the acoustic core has a convex curvilinear profile; and/or wherein the array of resonant cells comprises a plurality of third converging resonant cells defined by the top face and the bottom face at a location where the acoustic core has a concave curvilinear profile.

15. The tooling assembly of claim **1**, wherein the first converging resonant cell is configured as a high-frequency resonant cell defining a high-frequency resonant space, the high-frequency resonant cell being matched with the coupled resonant cell.

16. The tooling assembly of claim **13**, wherein at least some of the plurality of resonant cells comprise:

a first intermediate-frequency resonant cell defining an intermediate-frequency resonant space, the intermediate-frequency resonant space delimited by the top face and an additional partition, the additional partition separating the intermediate-frequency resonant space from the coupled resonant space; and

wherein the first intermediate-frequency resonant cell is configured as a converging resonant cell.

17. The tooling assembly of claim **1**, wherein the first converging resonant cell exhibits a convergence angle relative to a longitudinal axis of the first converging resonant cell of from 0.5 degrees to 30 degrees; and/or wherein the first diverging resonant cell exhibits a convergence angle relative to a longitudinal axis of the first diverging resonant cell of from −0.5 degrees to −30 degrees.

18. The tooling assembly of claim **1**, wherein the acoustic core comprises an injection molded acoustic core, or wherein the acoustic core comprises a press-formed acoustic core, or wherein the acoustic core comprises an additively manufactured acoustic core.

19. The tooling assembly of claim **1**, wherein the first converging resonant cell is realized at least in part by a cross-sectional thickness of one or more cell walls and/or at least in part by an angle or orientation of one or more cell walls; and/or wherein the first diverging resonant cell is realized at least in part by a cross-sectional thickness of one or more cell walls and/or at least in part by an angle or orientation of one or more cell walls.

20. A method of forming an acoustic core, the method comprising:

determining, with a tooling assembly configuration system, a configuration for a tooling assembly and/or a configuration for one or more forming tools for use in the tooling assembly;

making the one or more forming tools and/or assembling a tooling assembly that includes the one or more forming tools; and

forming the acoustic core using the tooling assembly that includes the one or more forming tools;

wherein the tooling assembly and/or the one or more forming tools have a configuration determined based at least in part on a configuration determined for the acoustic core;

wherein the acoustic core comprises:

an array of resonant cells, the array of resonant cells comprising

a plurality of resonant cell groups, respective ones of the resonant cell groups comprising a plurality of resonant cells, at least some of the plurality of resonant cells comprising:

a partitioned resonant cell comprising a first converging resonant cell and a first diverging resonant cell, the first converging resonant cell and the first diverging resonant cell defined by a plurality of cell walls integrally formed with one another and a partition integrally formed with the plurality of cell walls, the partition at least partially delimiting the first converging resonant cell from the first diverging resonant cell;

wherein the first converging resonant cell defines an upper resonant space delimited by the partition and a top face of the array of resonant cells, and wherein the first diverging resonant cell defines a lower resonant space delimited by the partition and a bottom face of the array of resonant cells;

wherein at least some of the plurality of resonant cells comprise:

a coupled resonant cell, the coupled resonant cell defining a coupled resonant space comprising an antecedent resonant space and a subsequent resonant space, and the coupled resonant cell comprising at least one cell wall having one or more wall-apertures defining a pathway between the antecedent resonant space and the subsequent resonant space; and

wherein the coupled resonant cell is configured as a second diverging resonant cell, the coupled resonant cell located at portion of the acoustic core that has a concave curvilinear profile; or

wherein the coupled resonant cell is configured as a second converging resonant cell, the coupled resonant cell located at a portion of the acoustic core that has a curvilinear profile.

* * * * *