US012388022B2

(12) **United States Patent**
Park et al.

(10) **Patent No.: US 12,388,022 B2**
(45) **Date of Patent: Aug. 12, 2025**

(54) **SEMICONDUCTOR DEVICE**

(71) Applicant: **SAMSUNG ELECTRONICS CO., LTD.**, Suwon-si (KR)

(72) Inventors: **Jun Ki Park**, Hwaseong-si (KR); **Yoon Tae Hwang**, Seoul (KR); **Wan Don Kim**, Seongnam-si (KR); **Sung Hwan Kim**, Hwaseong-si (KR); **Tae Yeol Kim**, Hwaseong-si (KR)

(73) Assignee: **SAMSUNG ELECTRONICS CO., LTD.**, Suwon-si (KR)

(*) Notice: Subject to any disclaimer, the term of this patent is extended or adjusted under 35 U.S.C. 154(b) by 590 days.

(21) Appl. No.: **17/885,025**

(22) Filed: **Aug. 10, 2022**

(65) **Prior Publication Data**

US 2023/0163076 A1 May 25, 2023

(30) **Foreign Application Priority Data**

Nov. 25, 2021 (KR) 10-2021-0164581

(51) **Int. Cl.**

H01L 23/535	(2006.01)
H01L 21/768	(2006.01)
H01L 23/485	(2006.01)
H01L 23/522	(2006.01)
H01L 23/528	(2006.01)
H10D 30/01	(2025.01)
H10D 30/62	(2025.01)

(52) **U.S. Cl.**

CPC ***H01L 23/535*** (2013.01); ***H01L 21/76804*** (2013.01); ***H01L 21/76805*** (2013.01); ***H01L 21/76895*** (2013.01); ***H01L 23/5283*** (2013.01)

(58) **Field of Classification Search**

CPC H01L 21/76805; H01L 21/76895; H01L 23/5283; H01L 23/5226; H01L 23/485; H01L 23/535

See application file for complete search history.

(56) **References Cited**

U.S. PATENT DOCUMENTS

8,409,941	B2	4/2013	Yin et al.
9,337,105	B1	5/2016	Kwon et al.
9,853,110	B2	12/2017	Zhang et al.
9,893,062	B2	2/2018	Shen et al.
10,522,403	B2	12/2019	Stephens et al.
10,763,335	B2	9/2020	Chung et al.
10,950,728	B2	3/2021	Chang et al.

(Continued)

Primary Examiner — Mohsen Ahmadi

(74) *Attorney, Agent, or Firm* — Morgan, Lewis & Bockius LLP

(57) **ABSTRACT**

A semiconductor device includes a gate structure including a gate electrode on a substrate. A source/drain pattern is on the substrate and positioned on a side surface of the gate electrode. A source/drain contact is on the source/drain pattern. A first conductive pad is on the source/drain contact. A second conductive pad is on the gate structure. A via plug penetrates the first conductive pad and is connected to the source/drain contact. A gate contact penetrates the second conductive pad and is connected to the gate electrode. A portion of the via plug protrudes from the first conductive pad. A portion of the gate contact protrudes from the second conductive pad. A height from an upper surface of the gate structure to an upper surface of the via plug is equal to a height from the upper surface of the gate structure to an upper surface of the gate contact.

20 Claims, 39 Drawing Sheets

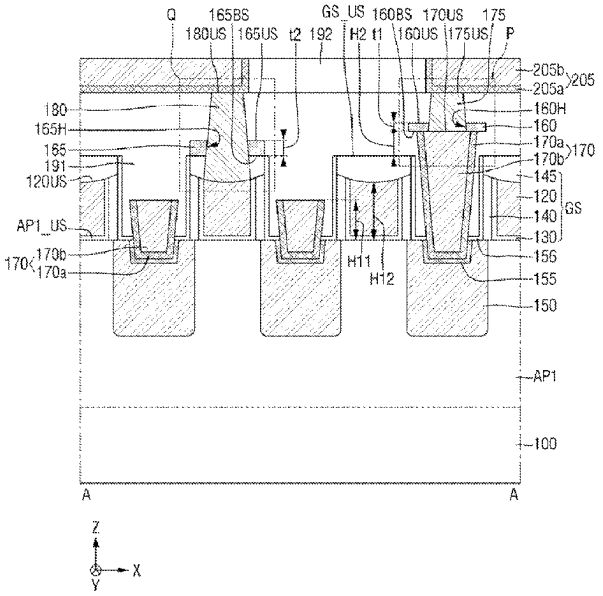

(56) **References Cited**

U.S. PATENT DOCUMENTS

2020/0013871	A1*	1/2020	An	H10D 64/689
2021/0098365	A1*	4/2021	Chou	H10D 30/797
2022/0130970	A1*	4/2022	Kang	H01L 23/5226
2022/0310811	A1*	9/2022	Min	H10D 84/038
2022/0319862	A1*	10/2022	Chang	H01L 21/0337

* cited by examiner

FIG. 1

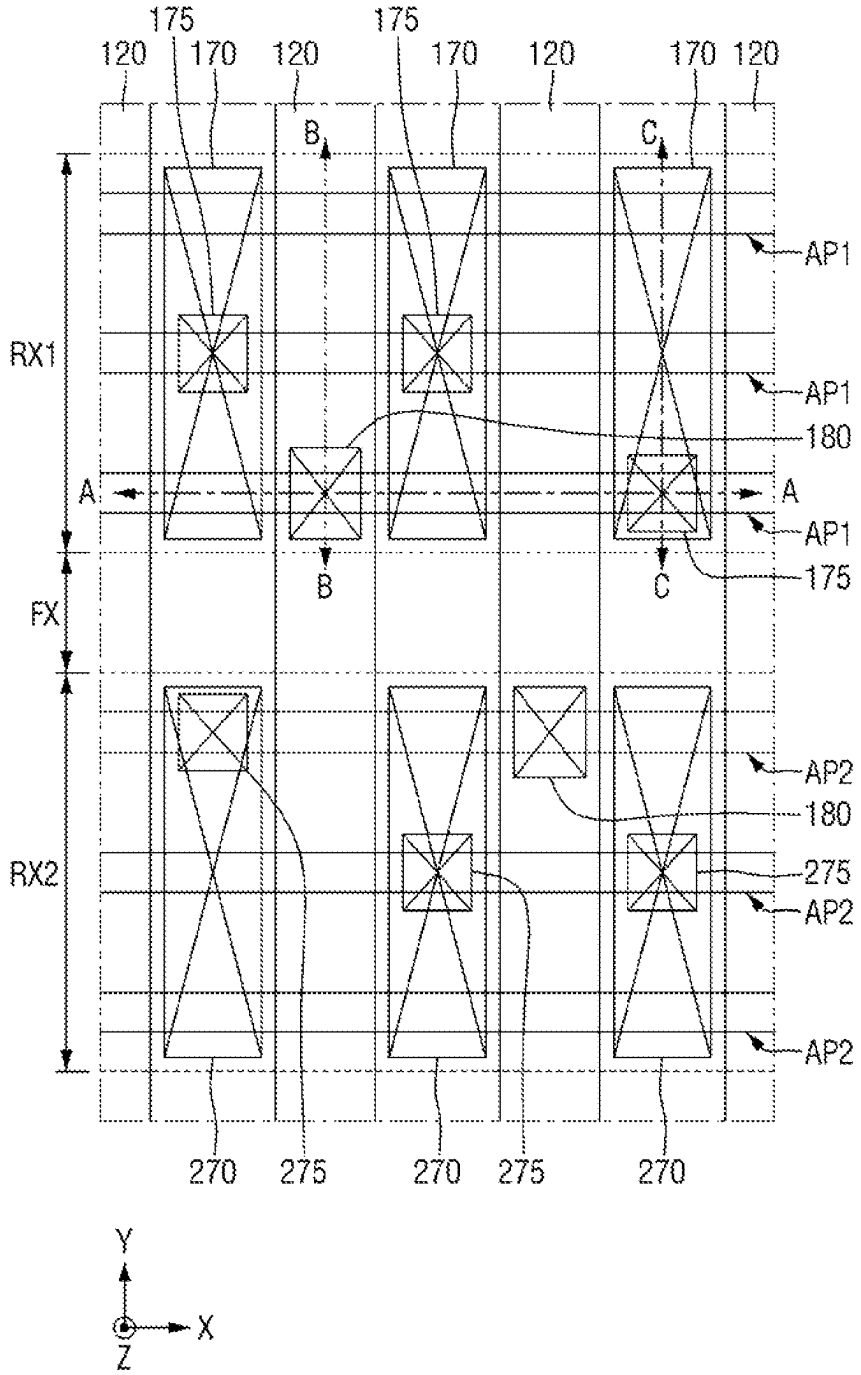
175
175
120
170
120
170
120
170
120
B
C
AP1
RX1
AP1
180
A
A
AP1
B
C
175
FX
AP2
180
RX2
275
AP2
AP2
270
275
270
275
270
Y
X
Z

FIG. 2

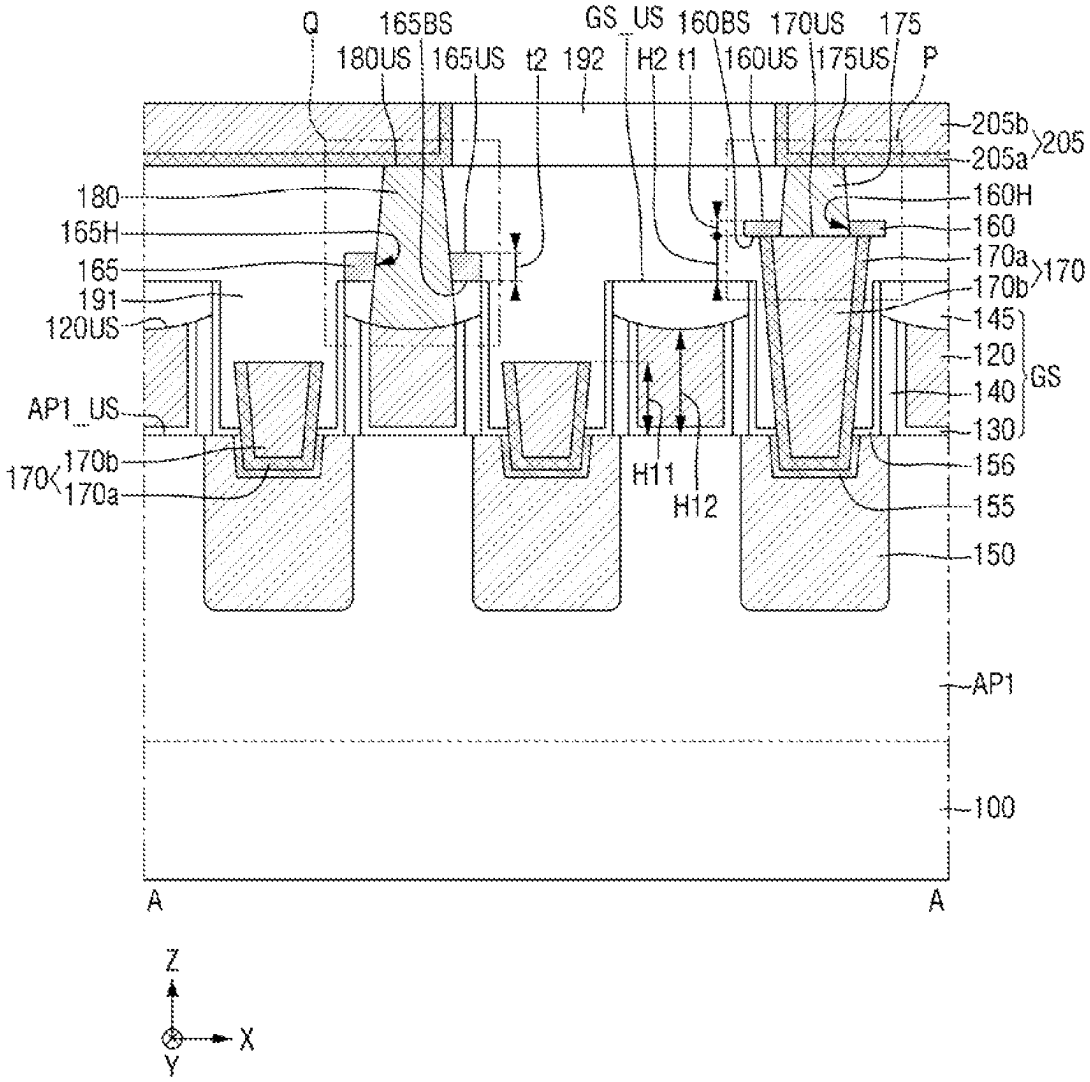
Q
165BS
GS_US
160BS
170US
175
180US
165US
t2
192
H2
t1
160US
175US
P
205b
205a
205
180
160H
165H
160
165
170a
170
191
170b
120US
145
120
GS
140
AP1_US
130
170b
170
170a
156
H11
H12
155
150
AP1
100
A
A
Z
X
Y

FIG. 3

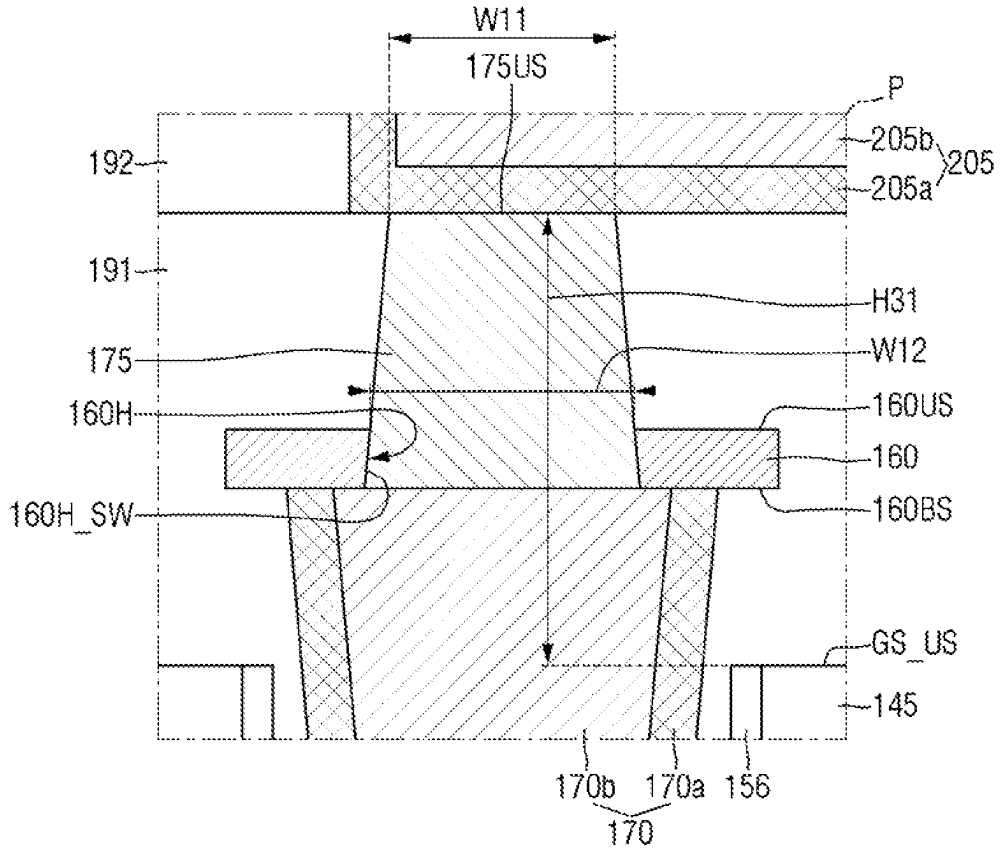
W11
175US
P
205b
205
205a
192
191
H31
175
W12
160H
160US
160
160H_SW
160BS
GS_US
145
170b
170a
156
170

FIG. 4

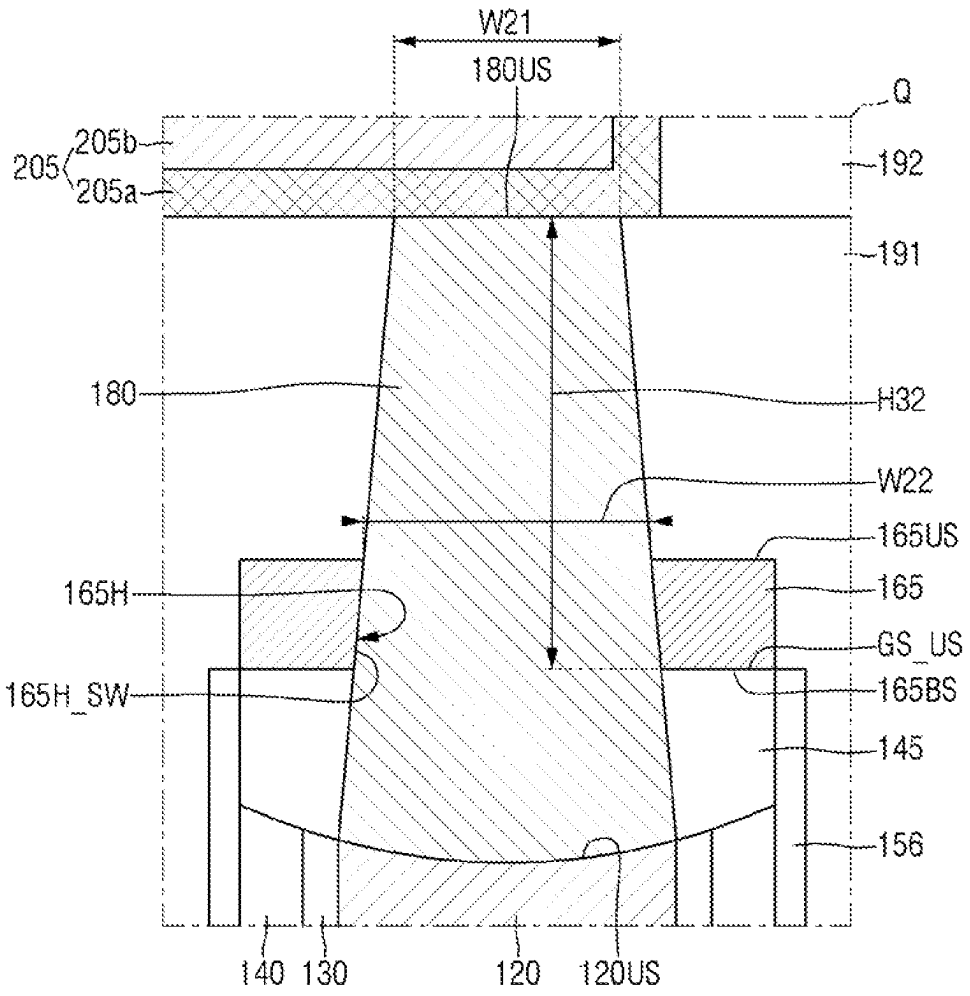
W21
180US
Q
205
205b
205a
192
191
180
H32
W22
165US
165H
165
GS_US
165H_SW
165BS
145
156
140
130
120
120US

FIG. 5

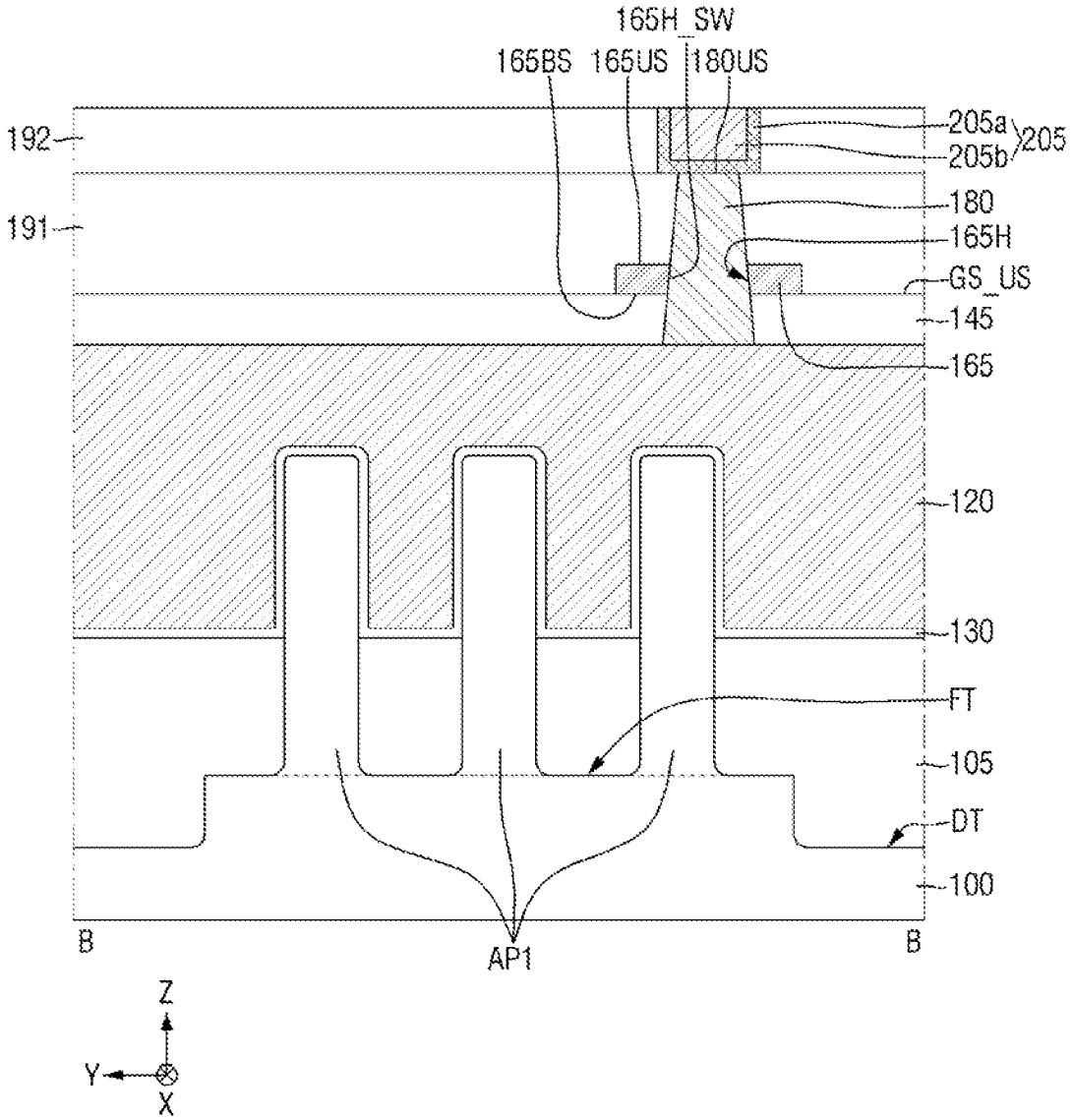
165H_SW
165BS
165US
180US
192
191
205a
205b
205
180
165H
GS_US
145
165
120
130
FT
105
DT
100
B
AP1
B
Z
Y
X

FIG. 6

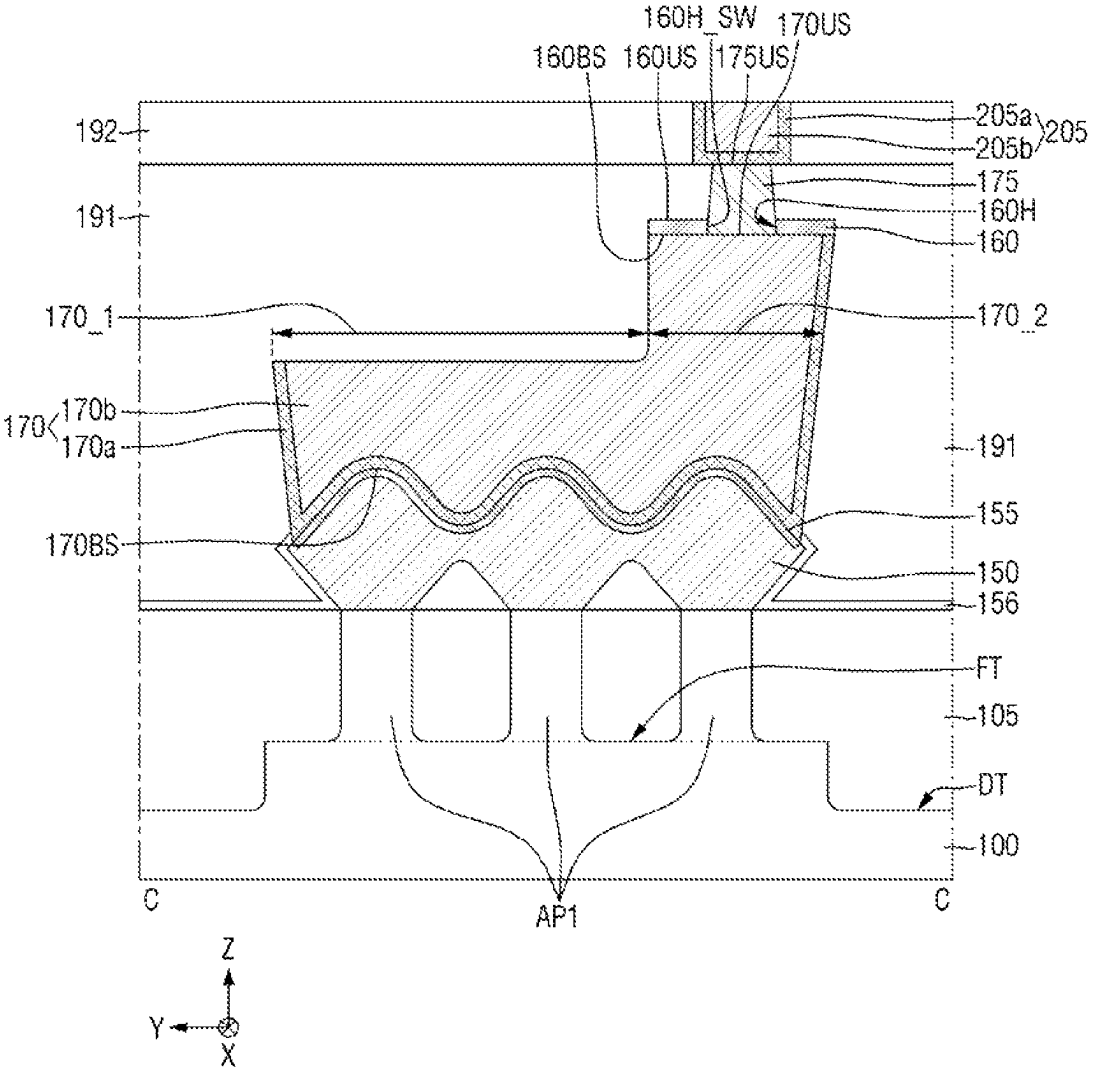
160H_SW
170US
160BS
160US
175US
192
205a
205b
205
175
160H
160
191
170_1
170_2
170
170b
170a
191
155
170BS
150
156
FT
105
DT
100
C
AP1
C
Z
Y
X

FIG. 7

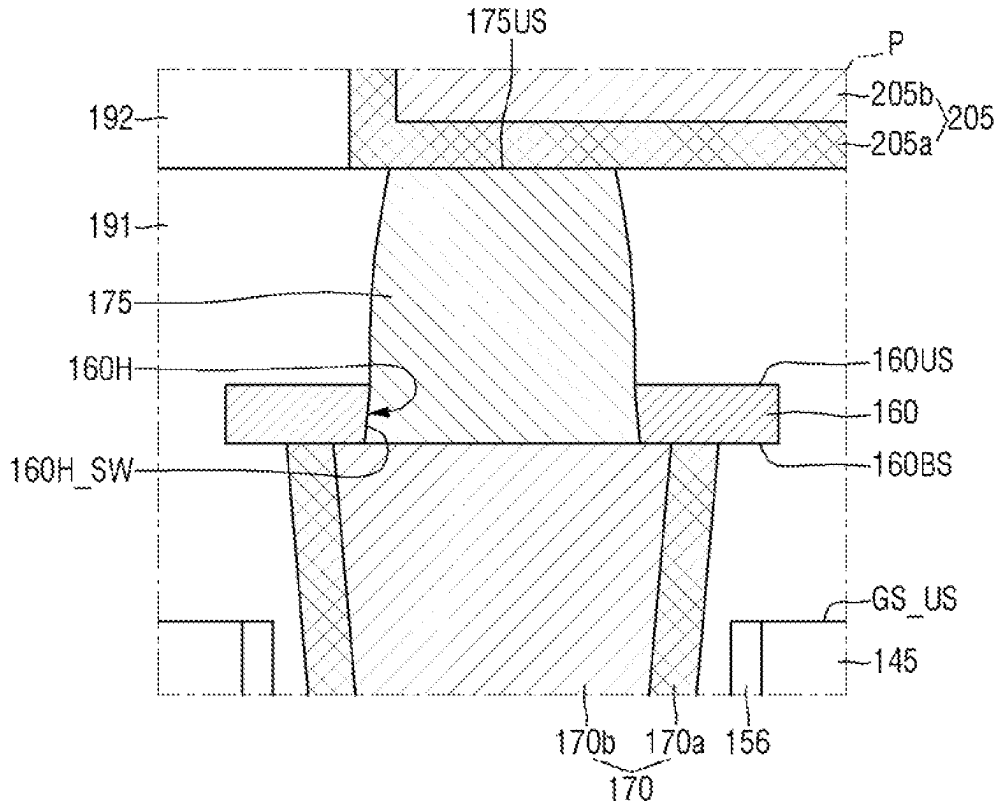
175US
P
205b
205
205a
192
191
175
160H
160US
160
160H_SW
160BS
GS_US
145
170b
170a
156
170

FIG. 8

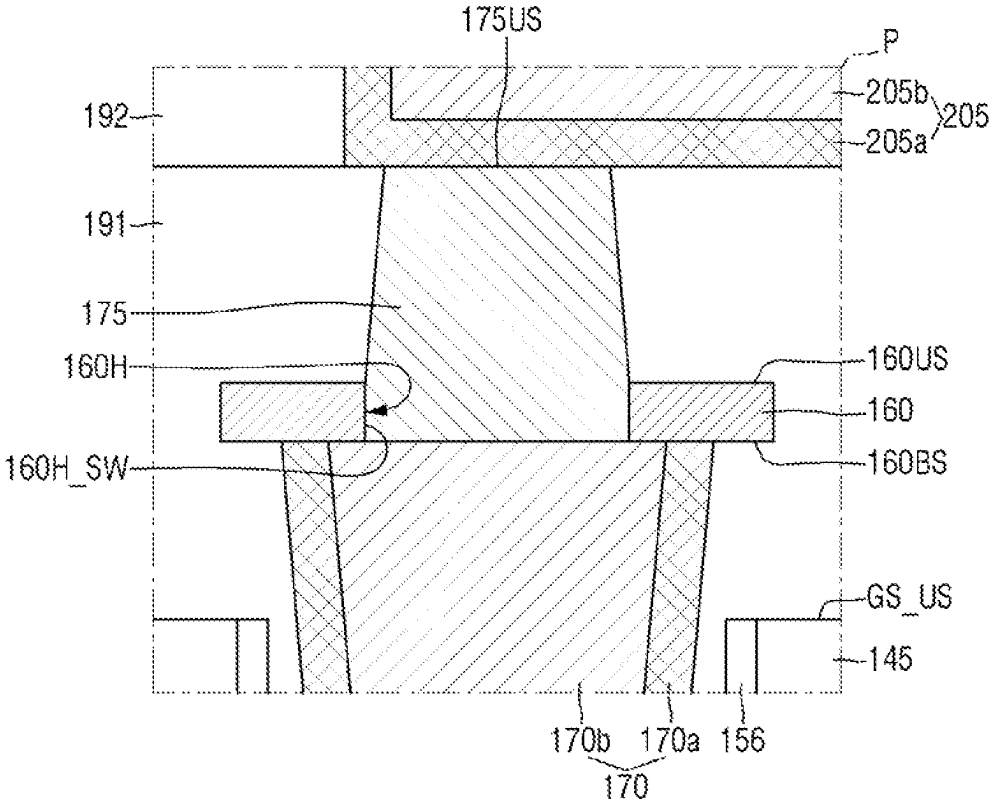
175US
P
205b
205
205a
192
191
175
160H
160US
160
160H_SW
160BS
GS_US
145
170b
170a
156
170

FIG. 9

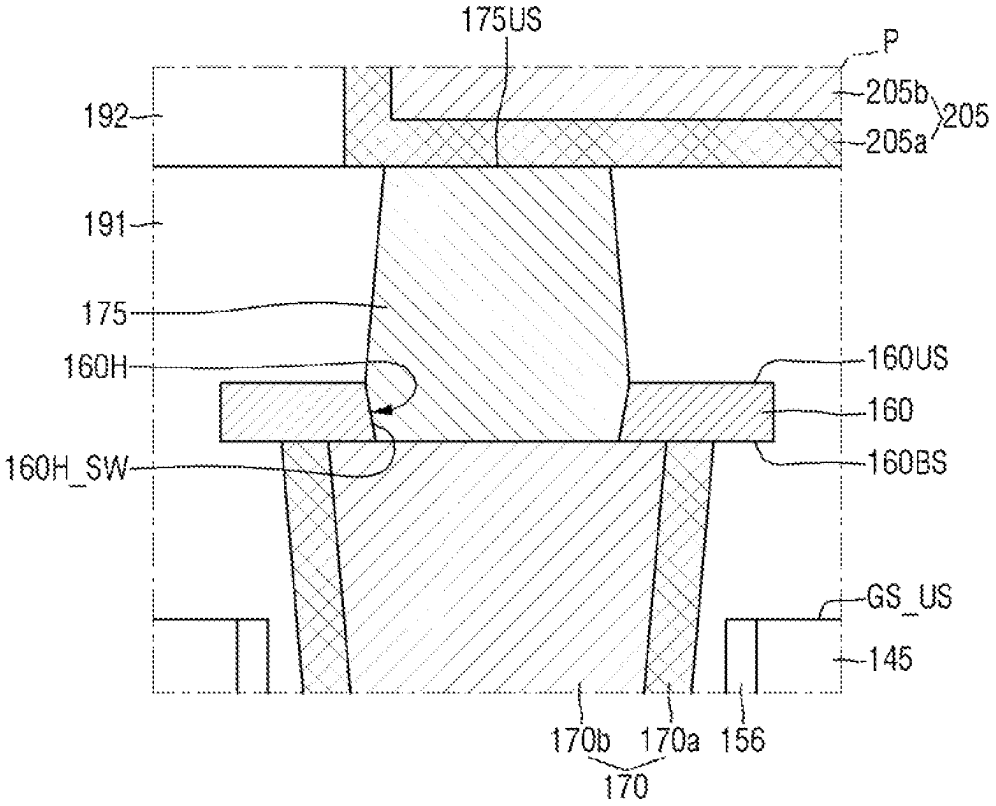
175US
P
205b
205
205a
192
191
175
160H
160US
160
160H_SW
160BS
GS_US
145
170b
170a
156
170

FIG. 10

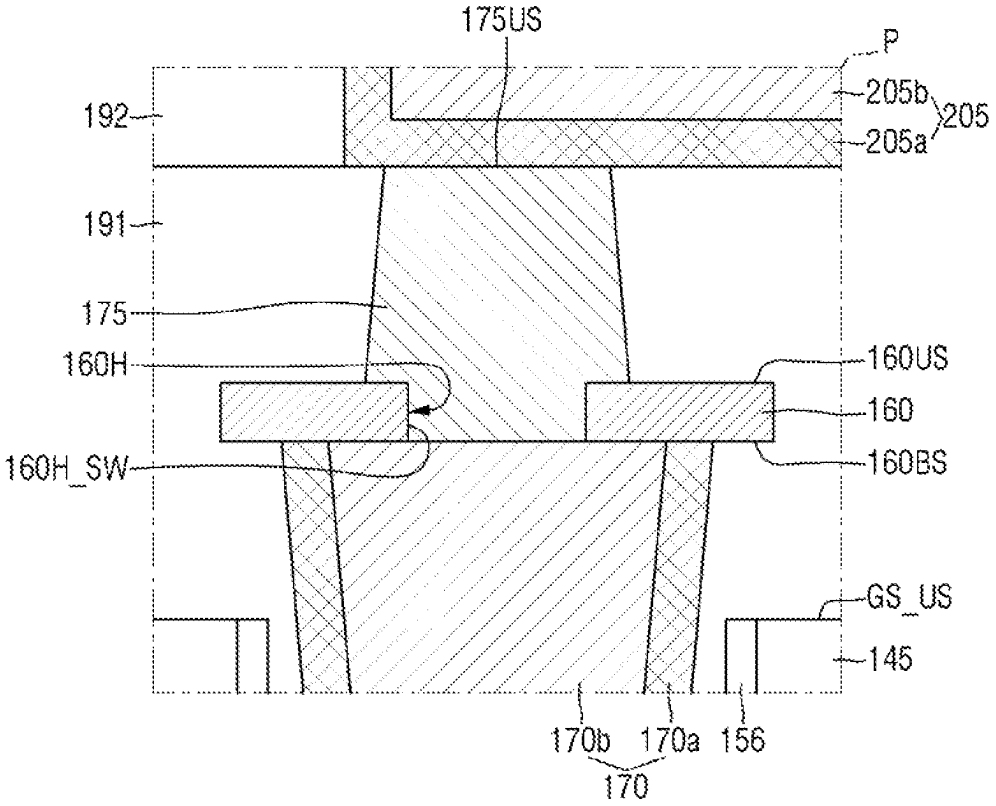
175US
P
205b
205
205a
192
191
175
160H
160US
160
160H_SW
160BS
GS_US
145
170b
170a
156
170

FIG. 11

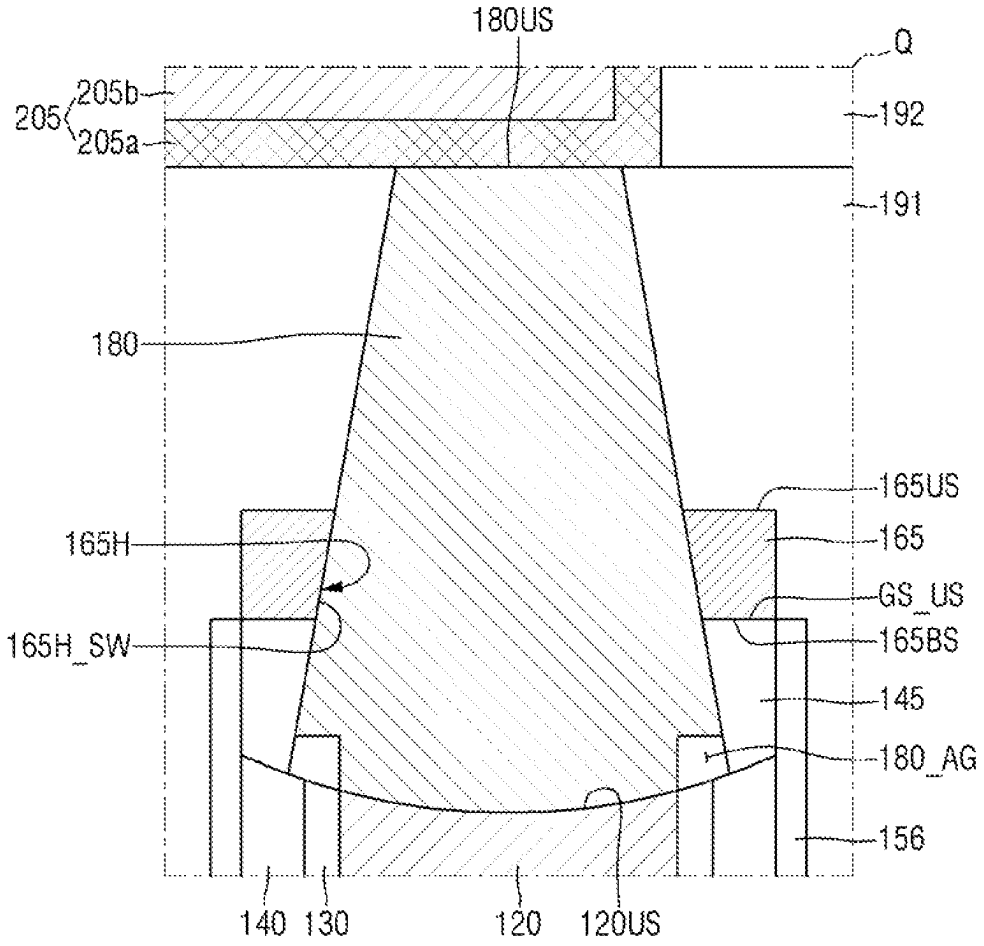
180US
Q
205b
205
205a
192
191
180
165US
165H
165
GS_US
165H_SW
165BS
145
180_AG
156
140
130
120
120US

FIG. 12

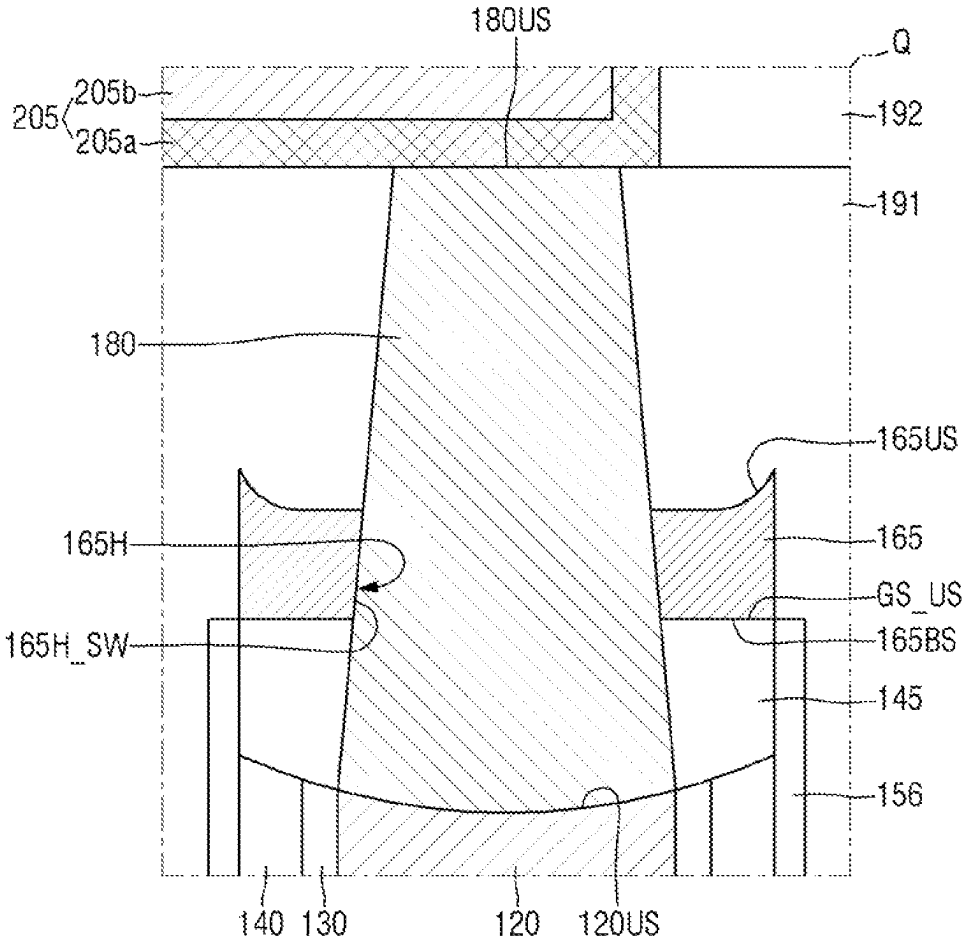
180US
Q
205
205b
205a
192
191
180
165US
165H
165
GS_US
165H_SW
165BS
145
156
140
130
120
120US

FIG. 13

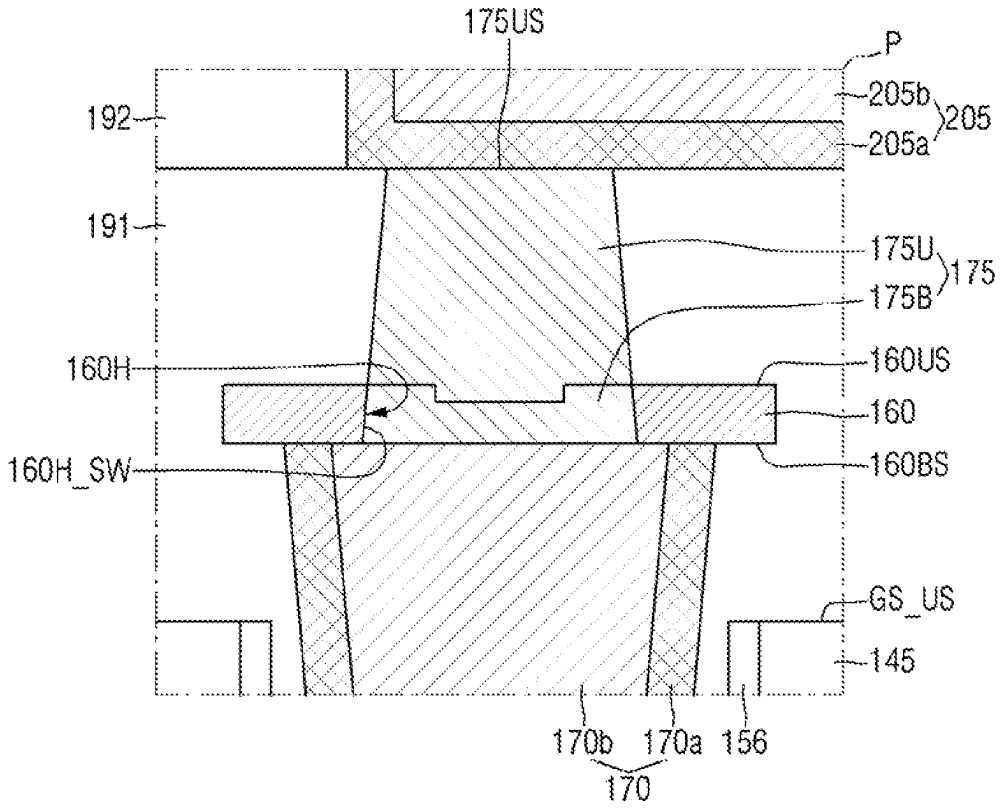
175US
P
205b
205
205a
192
191
175U
175
175B
160H
160US
160
160H_SW
160BS
GS_US
145
170b
170a
156
170

FIG. 14

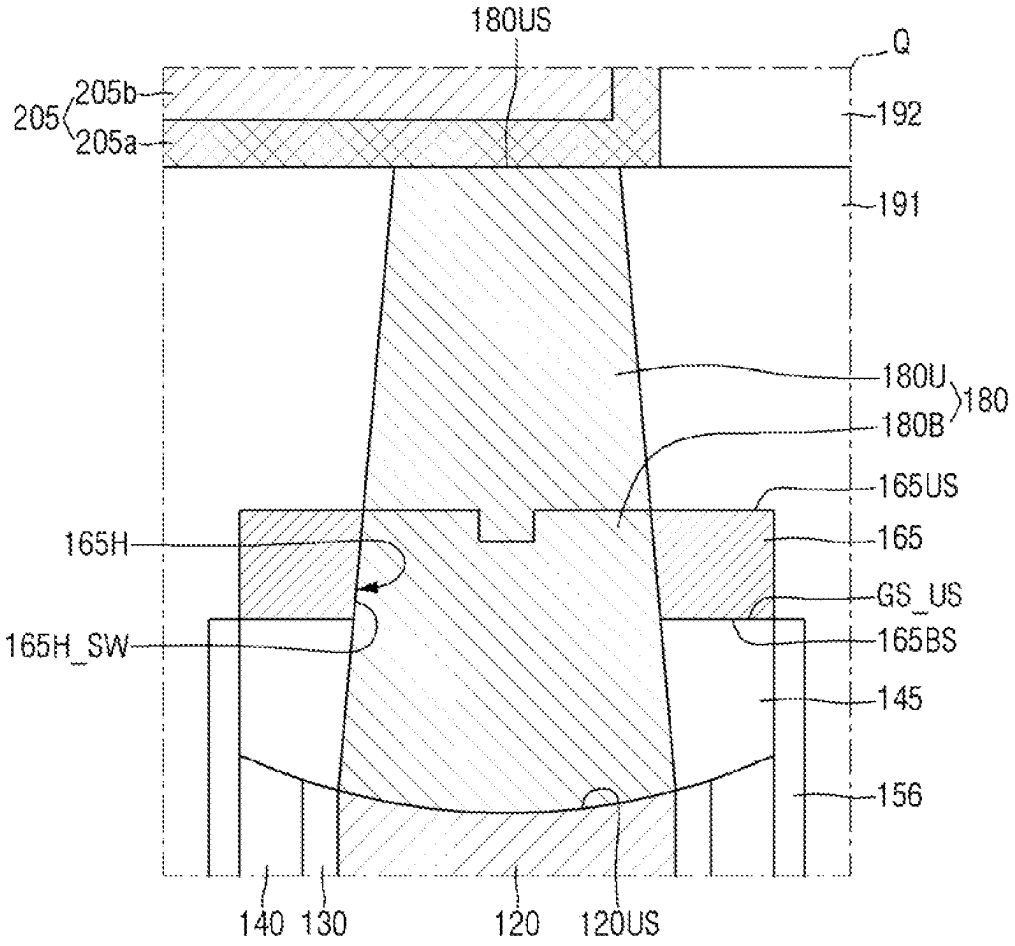
180US
Q
205b
205
205a
192
191
180U
180
180B
165US
165H
165
GS_US
165H_SW
165BS
145
156
140
130
120
120US

FIG. 15

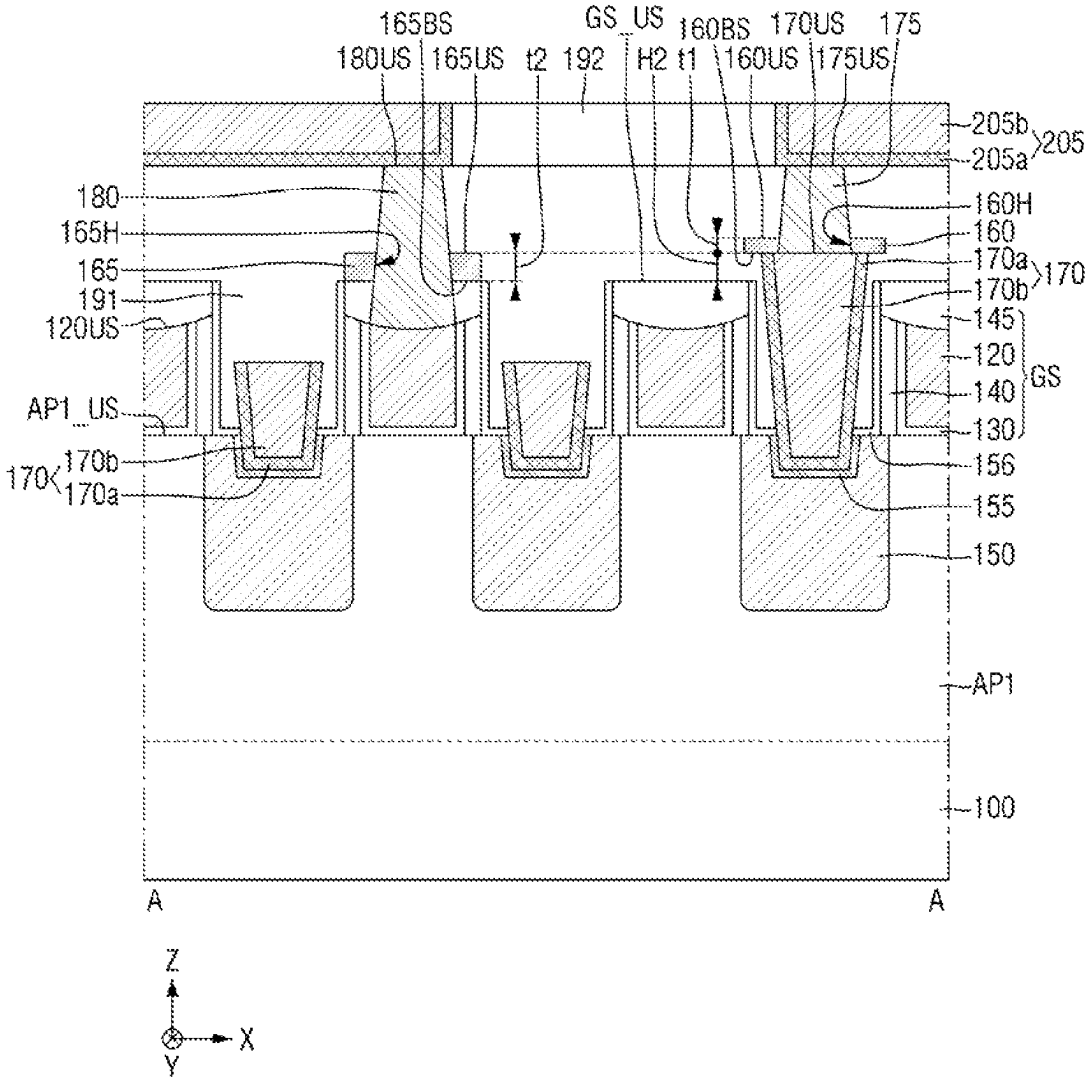
165BS
GS_US
160BS
170US
175
180US
165US
t2
192
H2
t1
160US
175US
205b
205
205a
180
160H
165H
160
165
170a
170
191
170b
120US
145
120
GS
140
AP1_US
130
170b
170
170a
156
155
150
AP1
100
A
A
Z
X
Y

FIG. 16

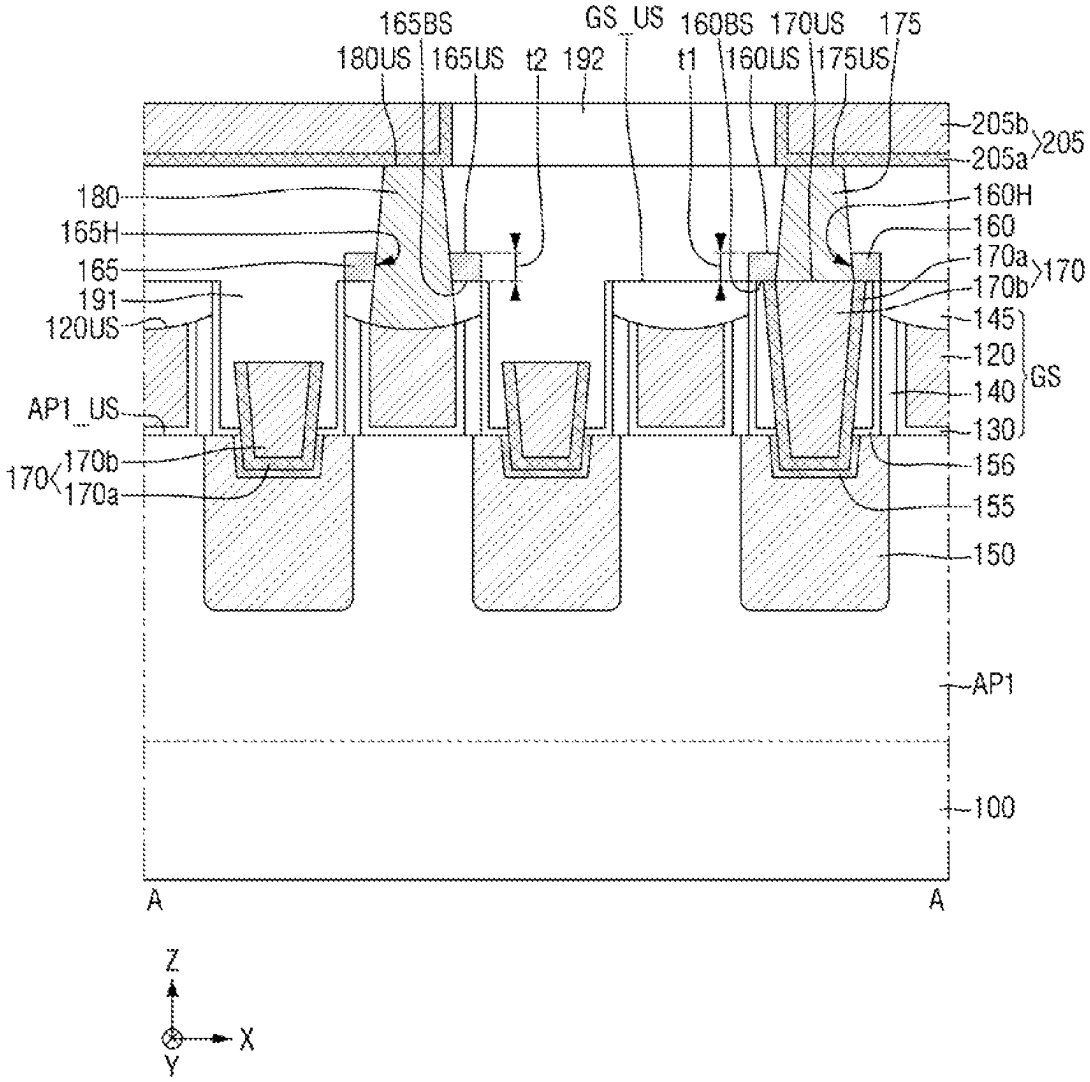
165BS
GS_US
160BS
170US
175
180US
165US
t2
192
t1
160US
175US
205b
205
205a
180
160H
165H
160
165
170a
170
191
170b
120US
145
120
GS
140
AP1_US
130
170b
170
170a
156
155
150
AP1
100
A
A
Z
X
Y

FIG. 17

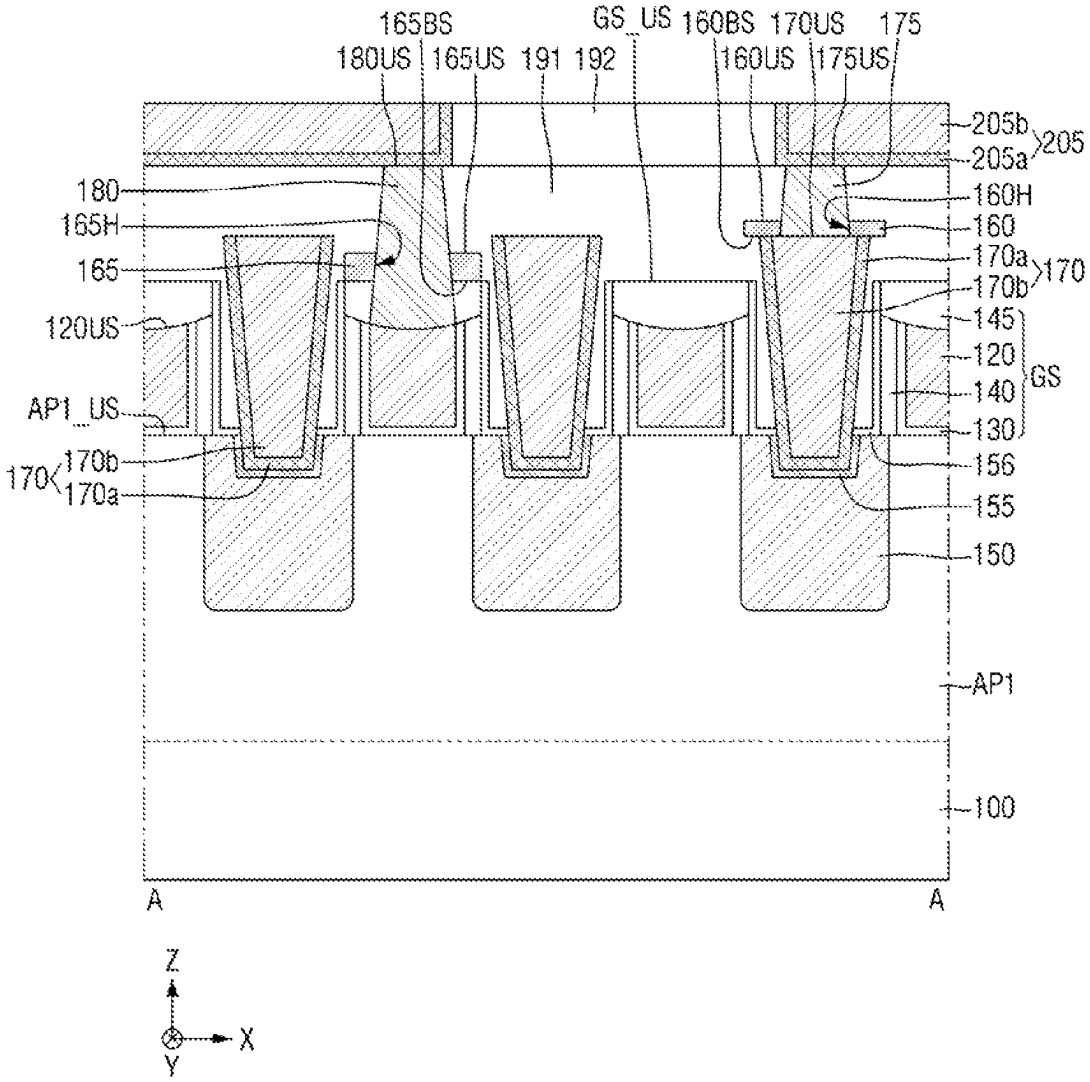
165BS
GS_US
160BS
170US
175
180US
165US
191
192
160US
175US
205b
205
205a
180
160H
165H
160
165
170a
170
170b
120US
145
120
GS
140
AP1_US
130
170b
170
170a
156
155
150
AP1
100
A
A
Z
X
Y

FIG. 18

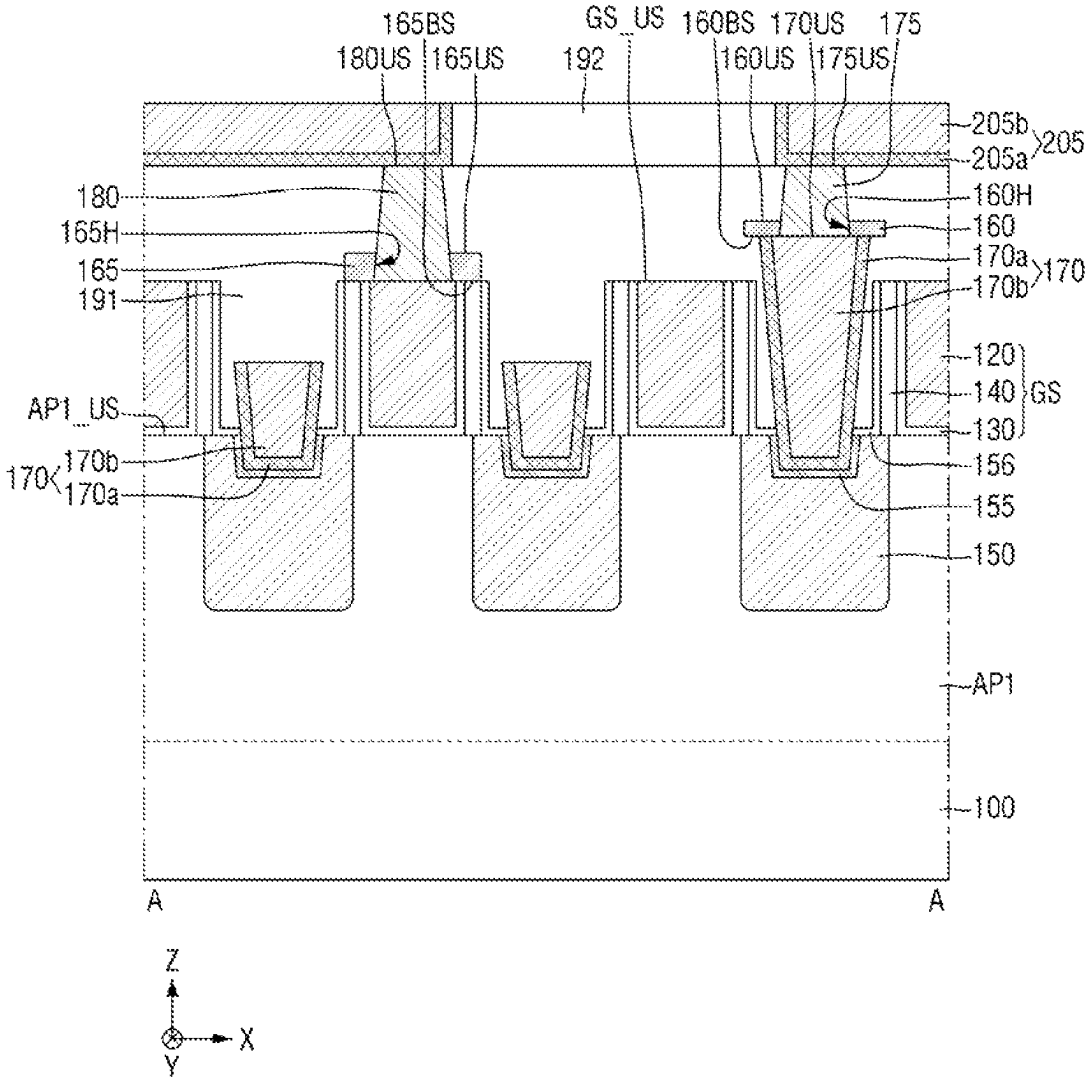
165BS
GS_US
160BS
170US
175
180US
165US
192
160US
175US
205b
205
205a
180
160H
165H
160
165
170a
170
191
170b
120
140
GS
AP1_US
130
170b
170
170a
156
155
150
AP1
100
A
A
Z
X
Y

FIG. 19

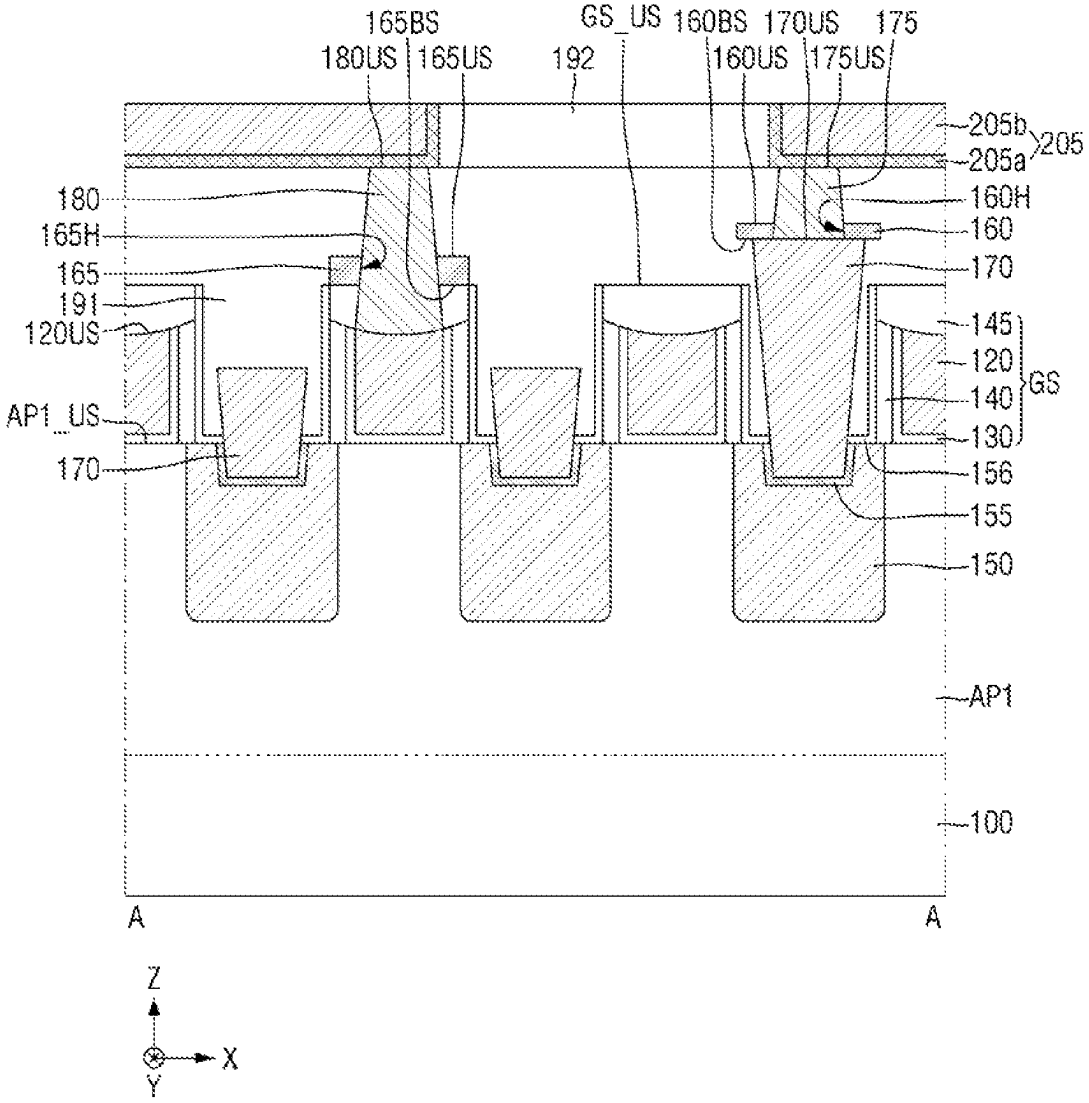
165BS
GS_US
160BS
170US
175
180US
165US
192
160US
175US
205b
205
205a
180
160H
165H
160
165
170
191
145
120US
120
GS
140
AP1_US
130
170
156
155
150
AP1
100
A
A
Z
X
Y

FIG. 20

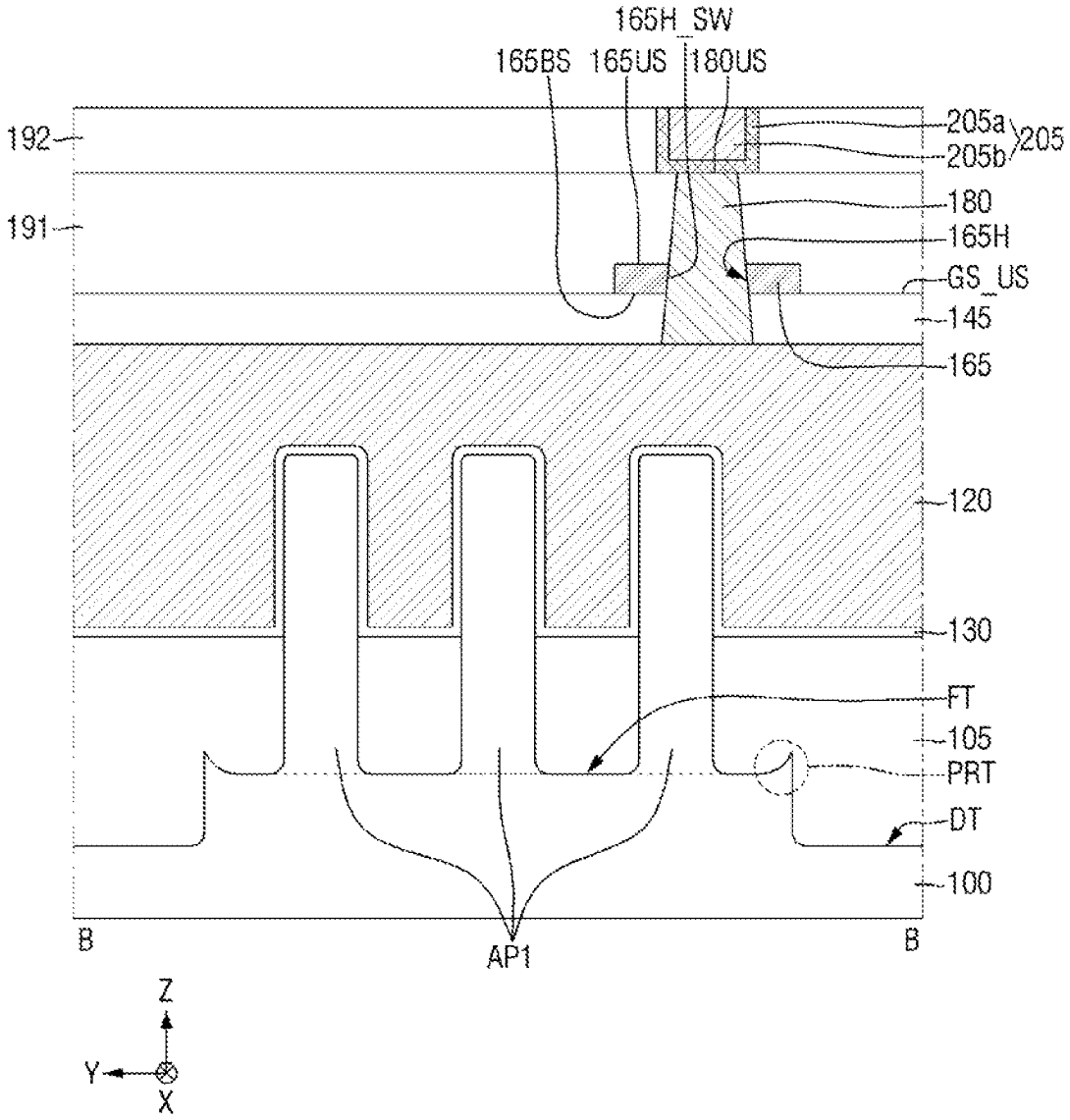
165H_SW
165BS
165US
180US
192
191
205a
205b
205
180
165H
GS_US
145
165
120
130
FT
105
PRT
DT
100
B
AP1
B
Z
Y
X

FIG. 21

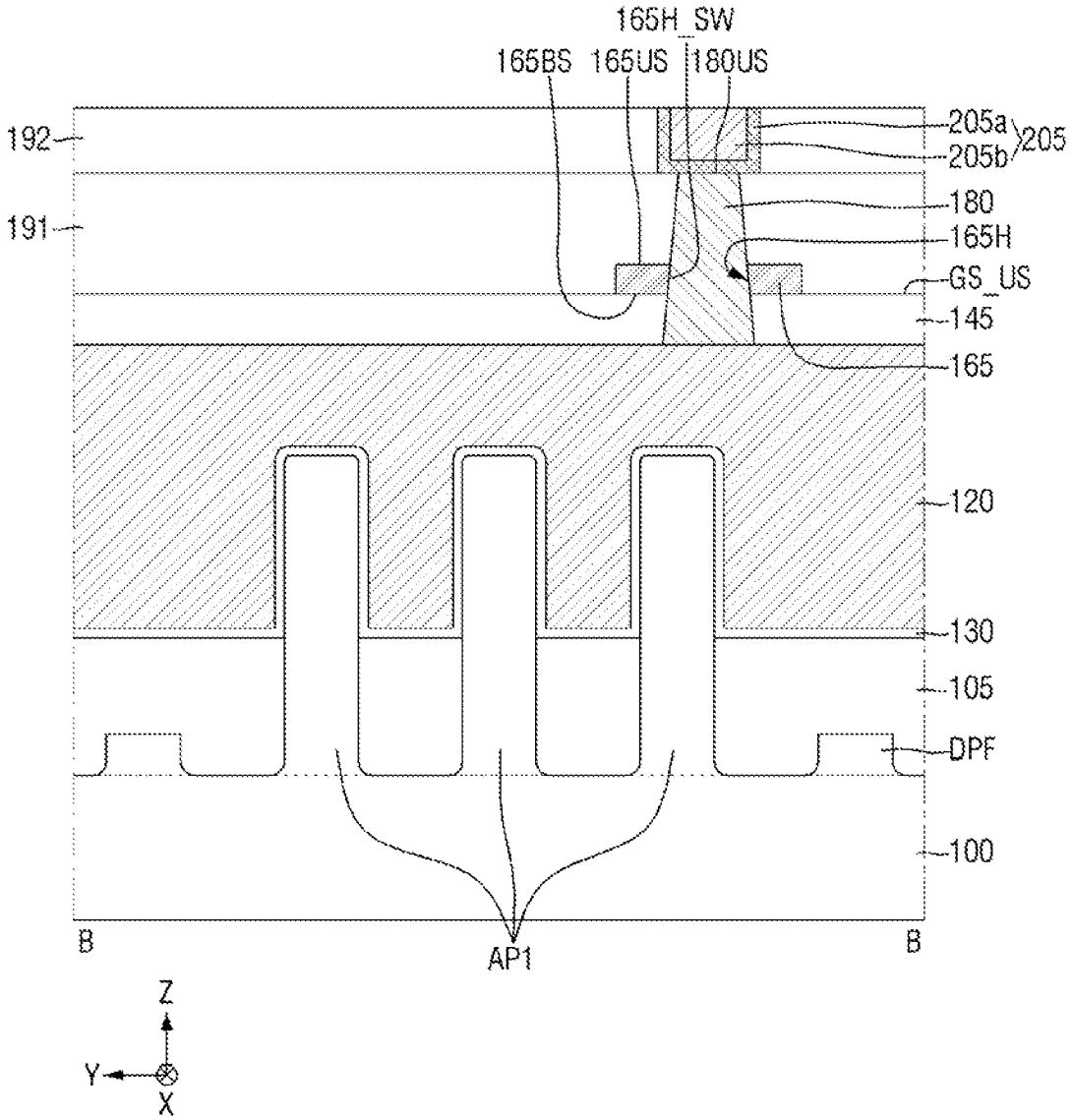
165H_SW
165BS
165US
180US
192
191
205a
205b
205
180
165H
GS_US
145
165
120
130
105
DPF
100
B
AP1
B
Z
Y
X

FIG. 22

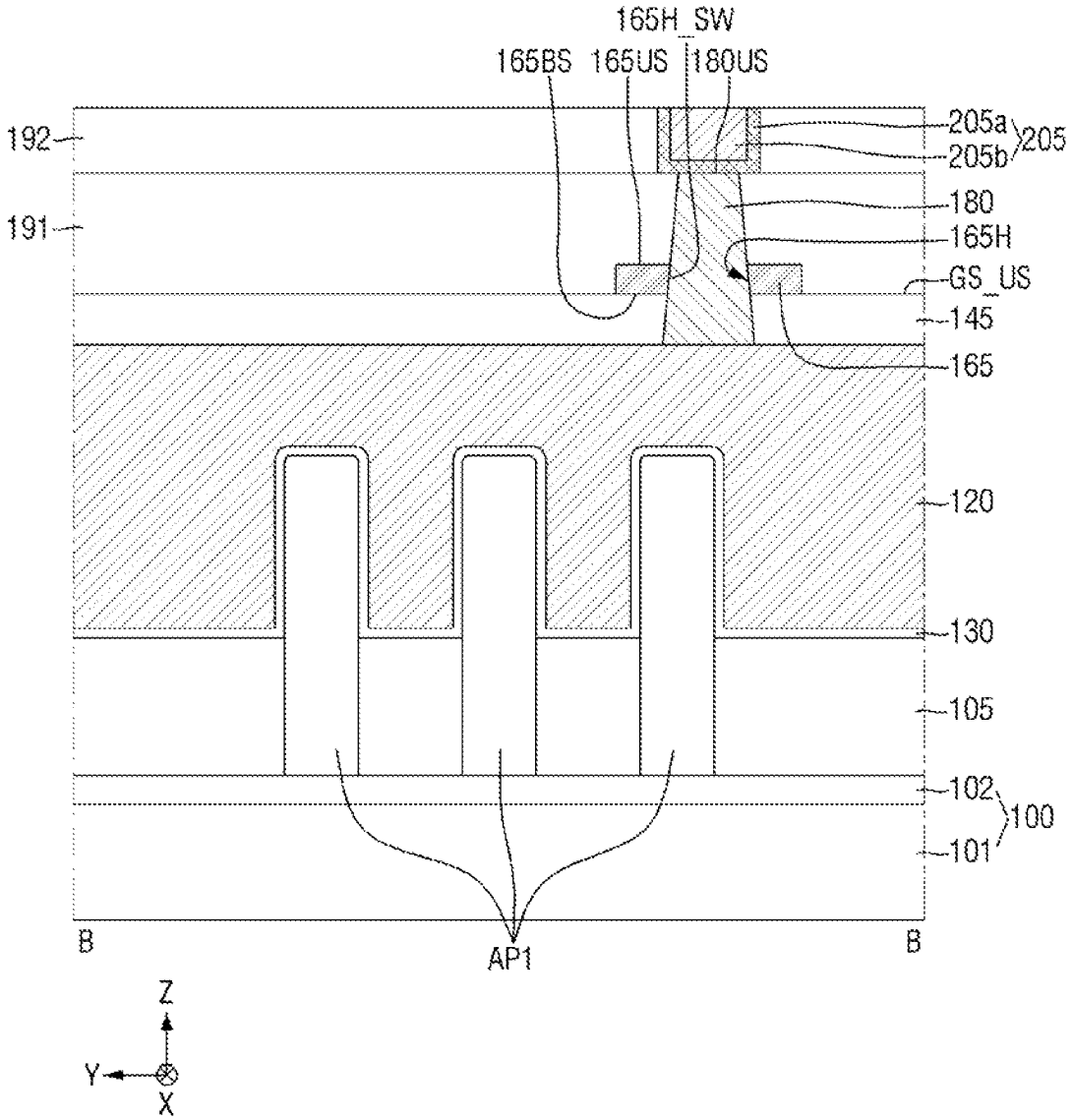
165H_SW
165BS
165US
180US
192
191
205a
205b
205
180
165H
GS_US
145
165
120
130
105
102
100
101
B
AP1
B
Z
Y
X

FIG. 23

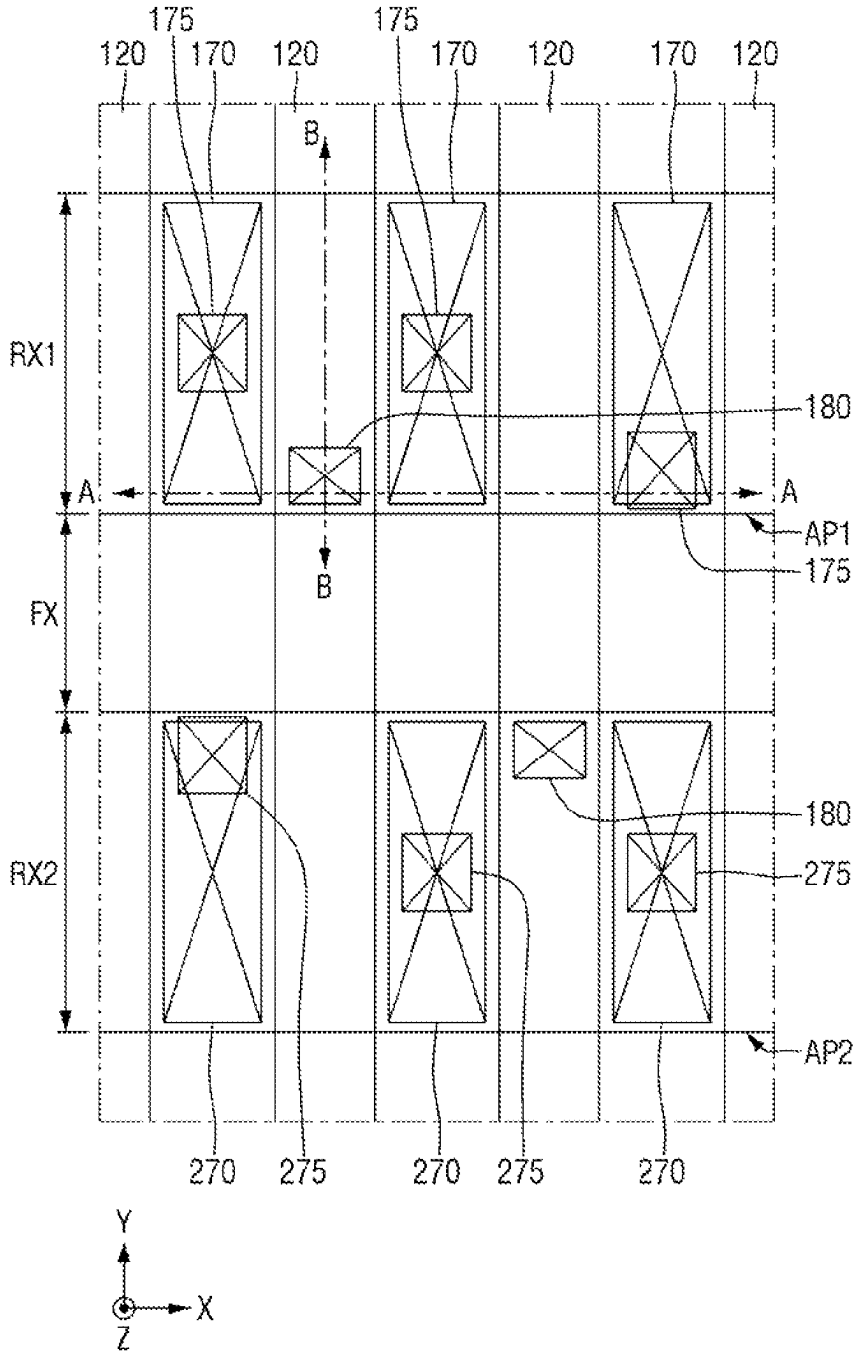
175
175
120
170
120
170
120
170
120
B
RX1
180
A
A
AP1
175
B
FX
180
RX2
275
AP2
270
275
270
275
270
Y
X
Z

FIG. 24

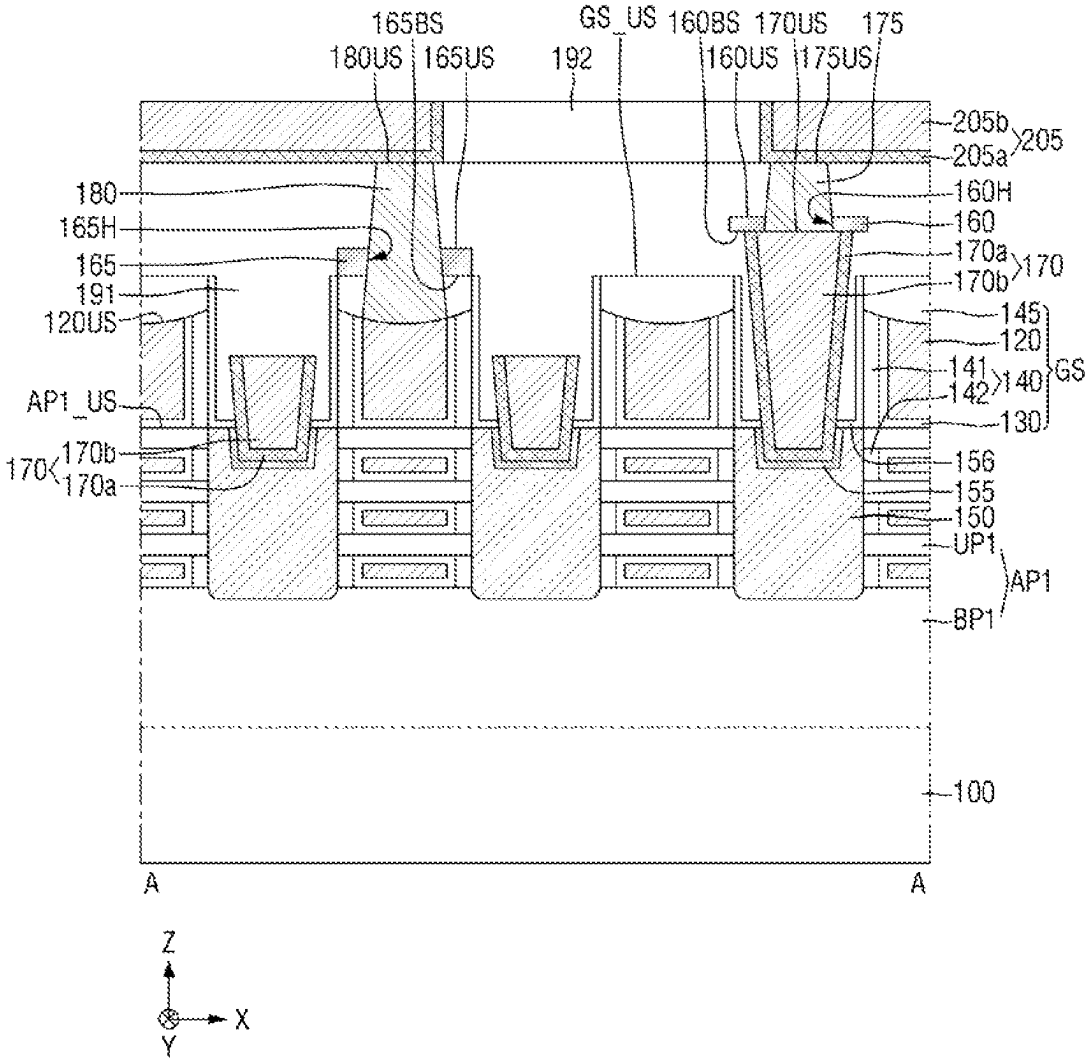
165BS
GS_US
160BS
170US
175
180US
165US
192
160US
175US
205b
205
205a
180
160H
165H
160
165
170a
170
191
170b
120US
145
120
141
GS
140
142
AP1_US
130
170b
170
170a
156
155
150
UP1
AP1
BP1
100
A
A
Z
X
Y

FIG. 25

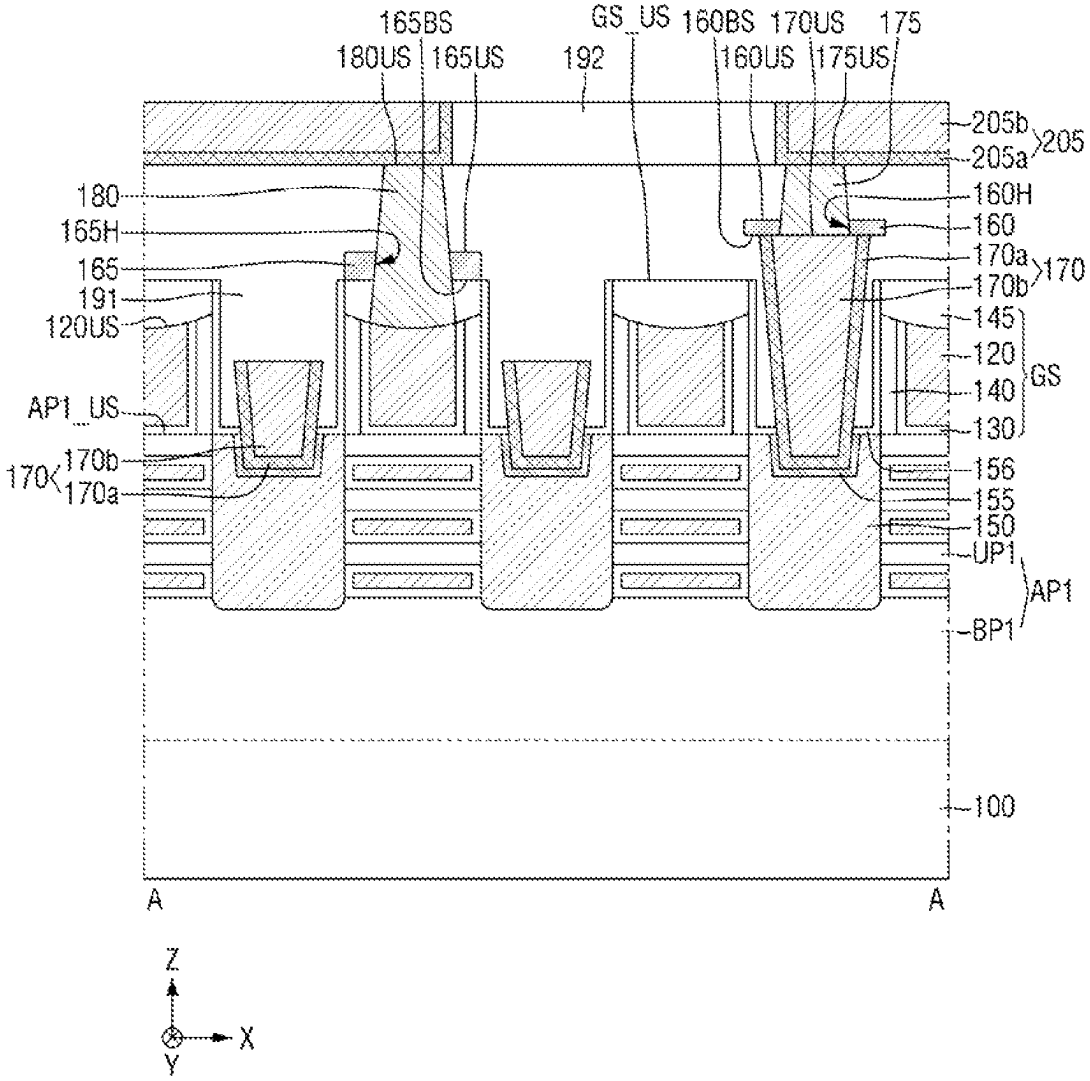
165BS
GS_US
160BS
170US
175
180US
165US
192
160US
175US
205b
205
205a
180
160H
165H
160
165
170a
170
191
170b
120US
145
120
GS
140
AP1_US
130
170b
170
170a
156
155
150
UP1
AP1
BP1
100
A
A
Z
X
Y

FIG. 26

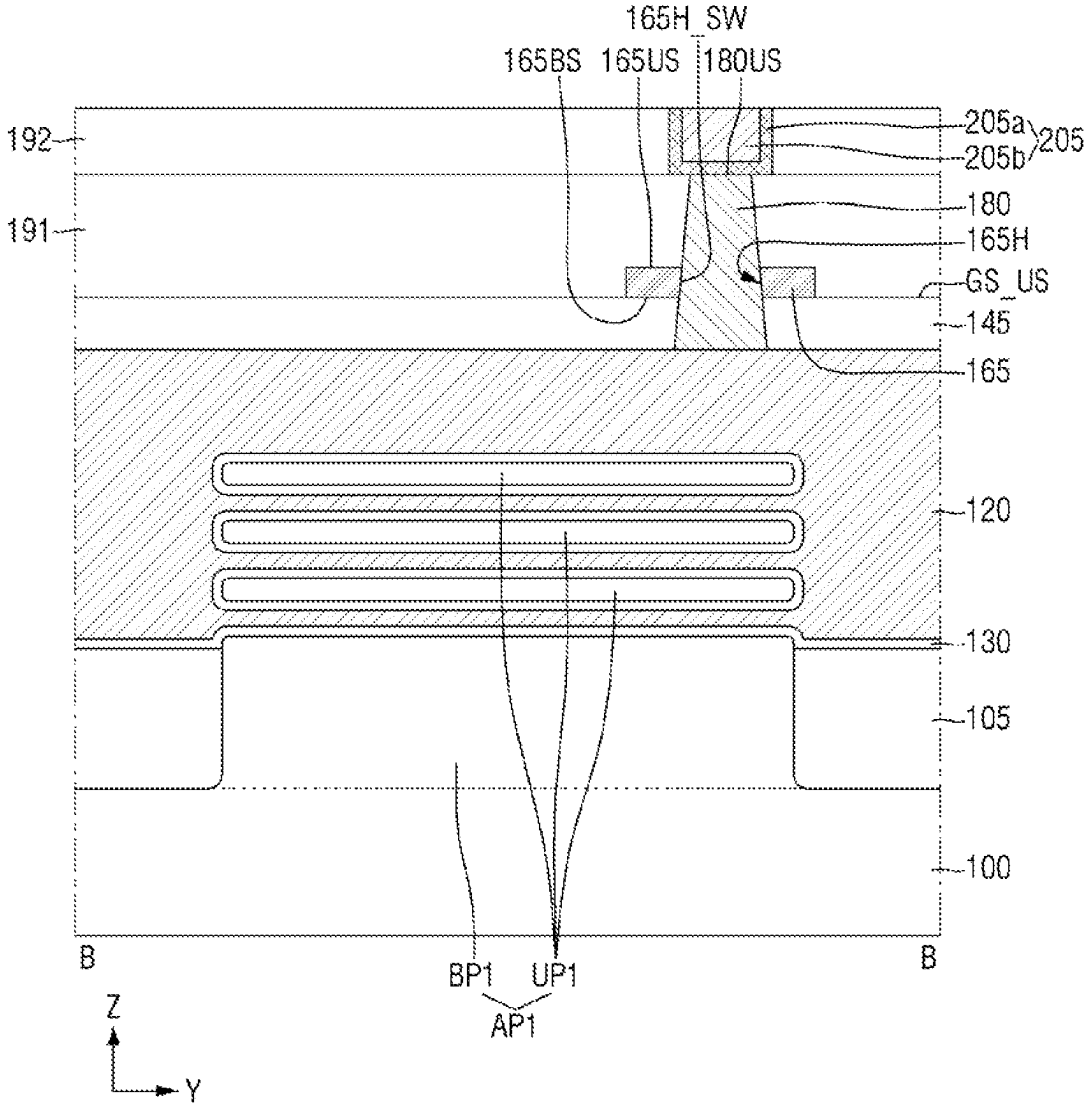
165H_SW
165BS
165US
180US
192
205a
205b
205
191
180
165H
GS_US
145
165
120
130
105
100
B
B
BP1
UP1
AP1
Z
Y

FIG. 27

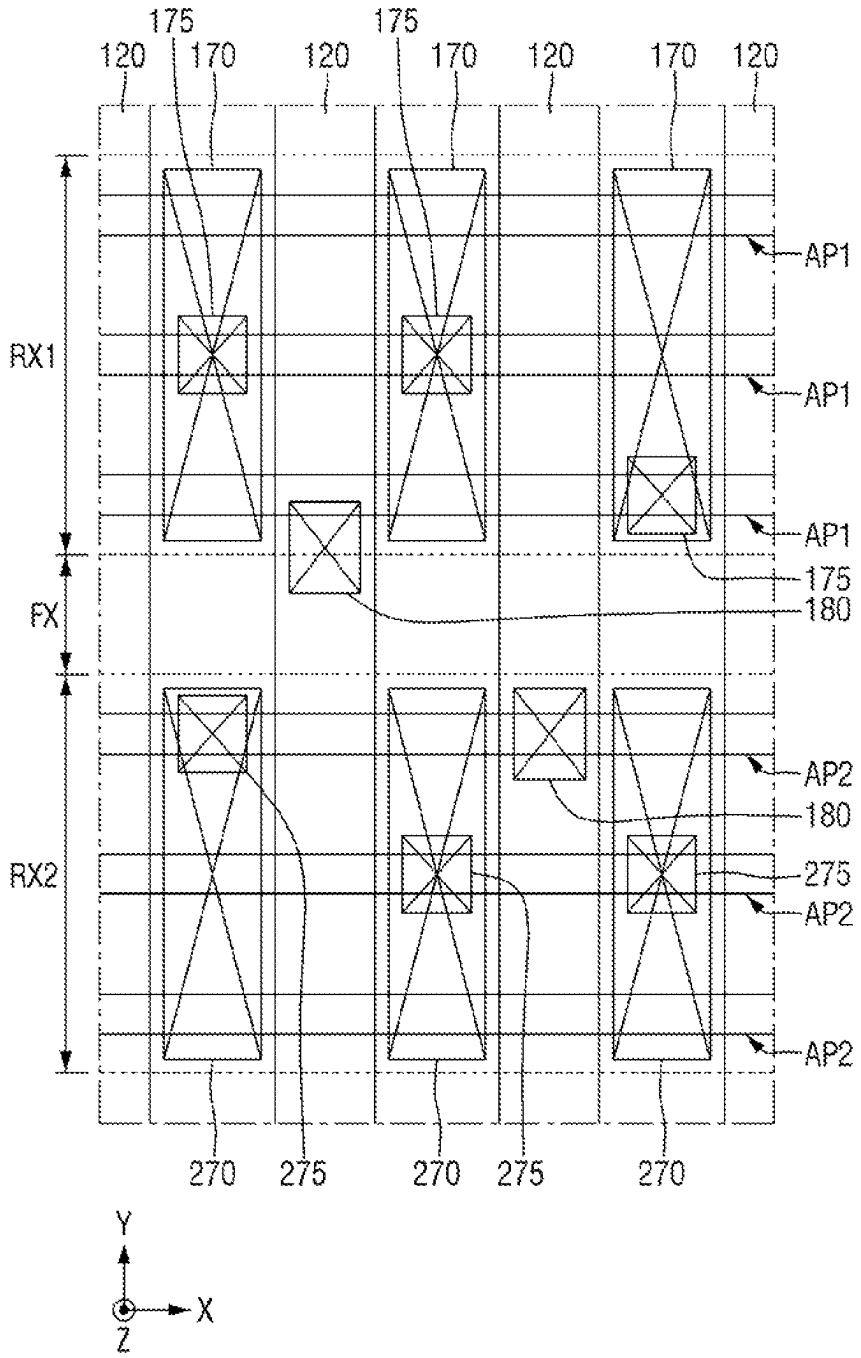
175
175
120
170
120
170
120
170
120
AP1
AP1
AP1
RX1
175
180
FX
AP2
180
RX2
275
AP2
AP2
270
275
270
275
270
Y
X
Z

FIG. 28

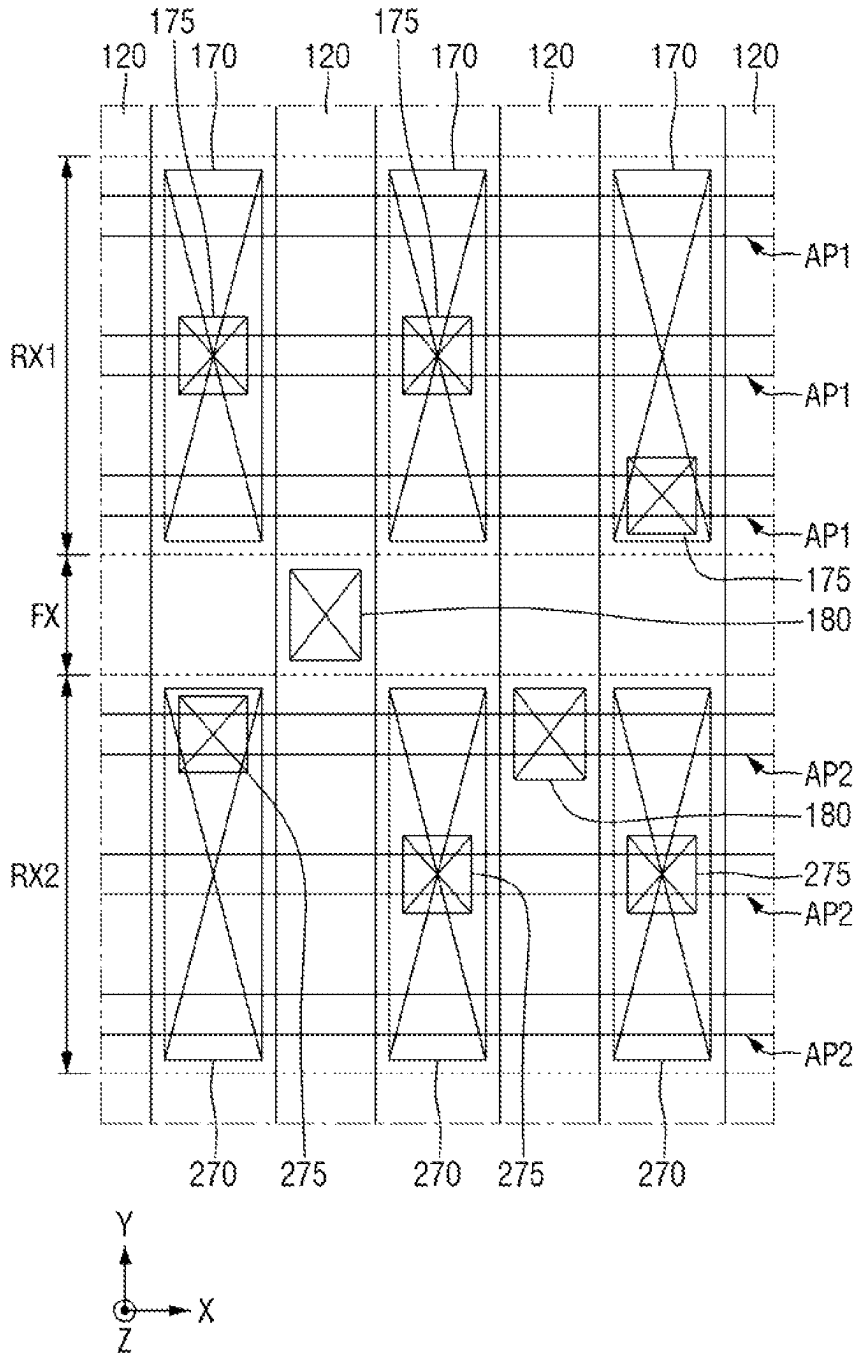
175
175
120
170
120
170
120
170
120
AP1
AP1
AP1
RX1
175
FX
180
AP2
180
RX2
275
AP2
AP2
270
275
270
275
270
Y
X
Z

FIG. 29

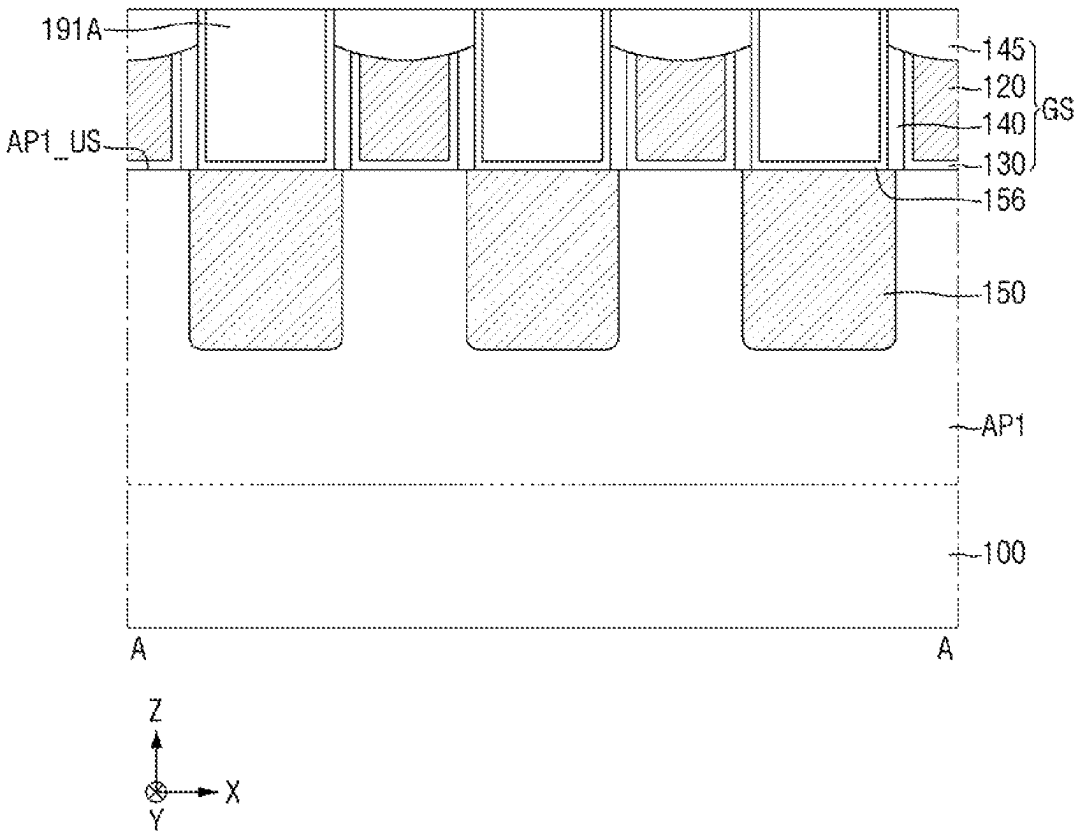

FIG. 30

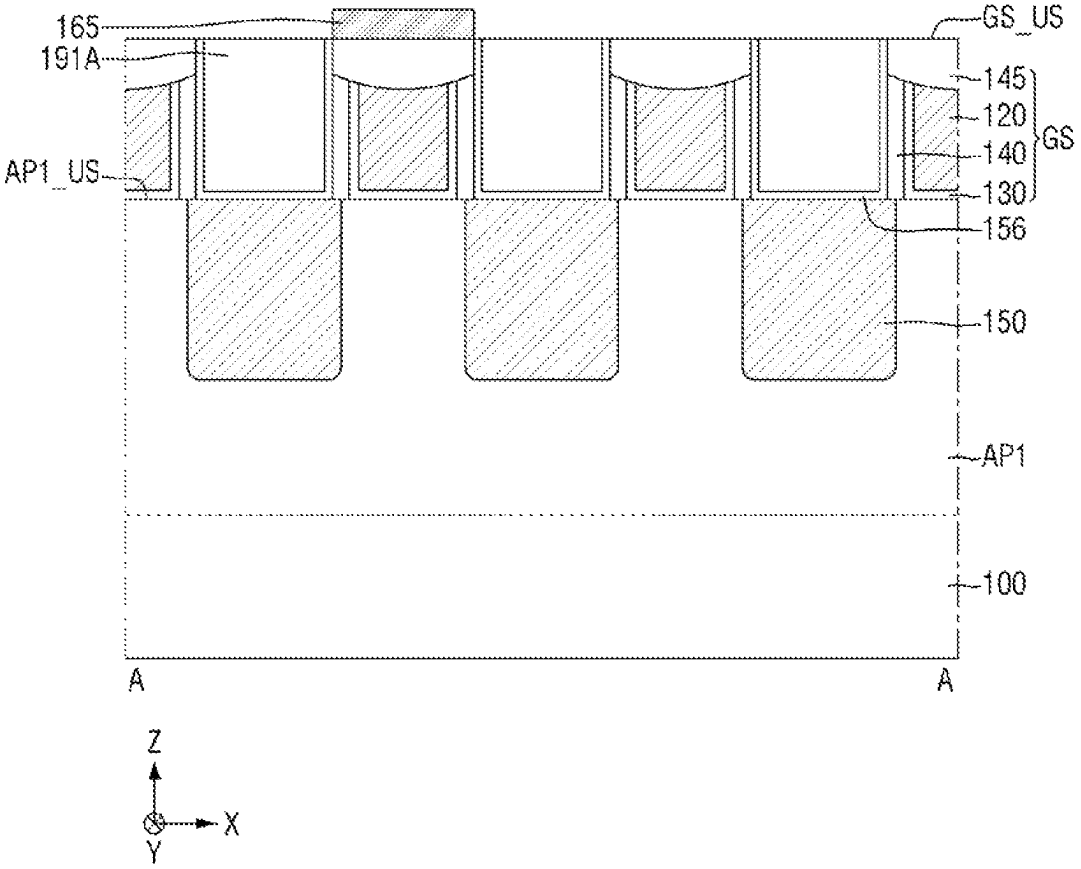

FIG. 31

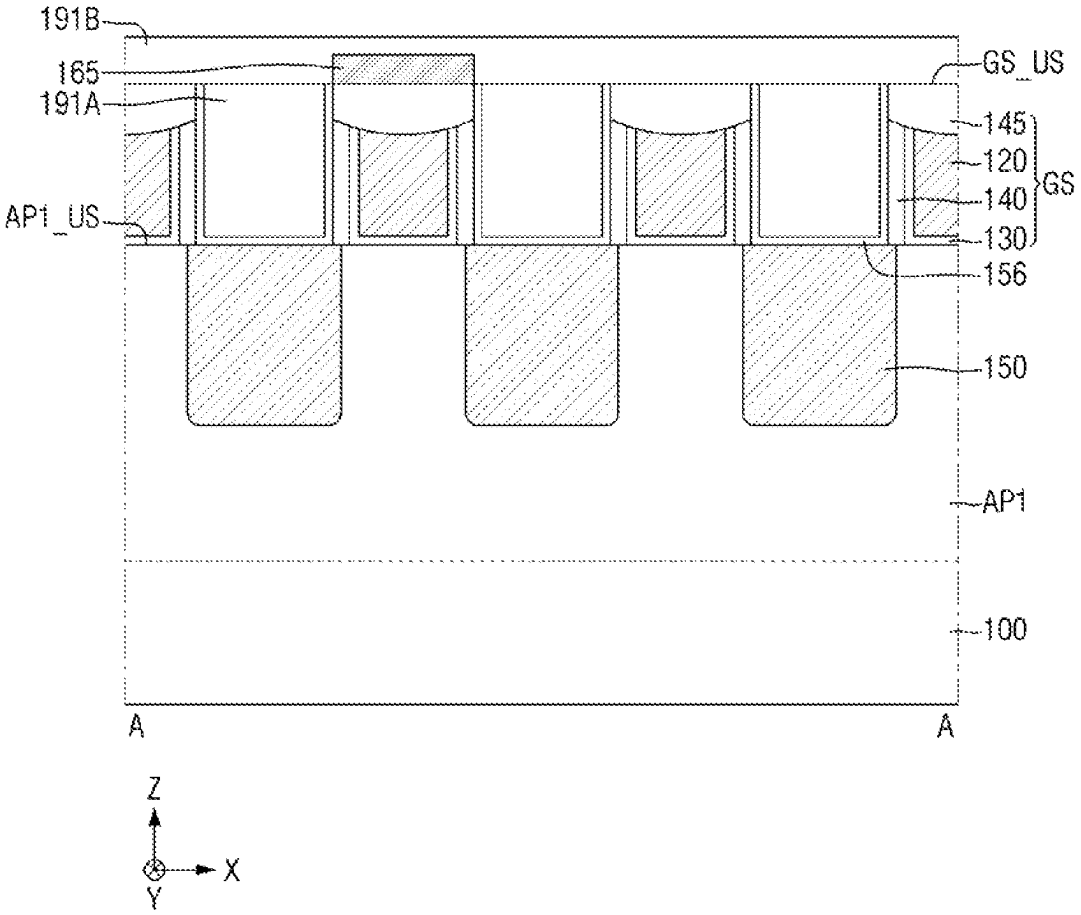
191B
165
191A
GS_US
145
120
140
130
GS
AP1_US
156
150
AP1
100
A
A
Z
X
Y

FIG. 32

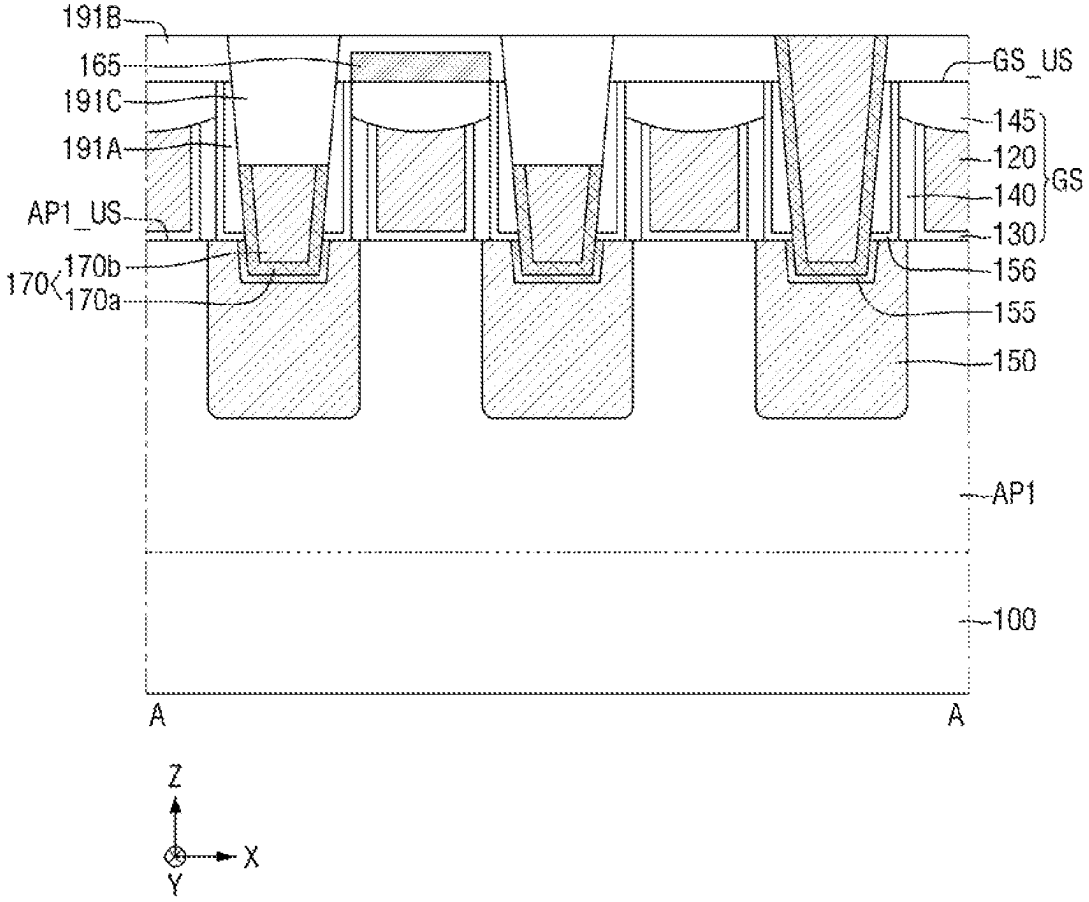
191B
165
191C
191A
AP1_US
170
170b
170a
GS_US
145
120
140
130
GS
156
155
150
AP1
100
A
A
Z
X
Y

FIG. 33

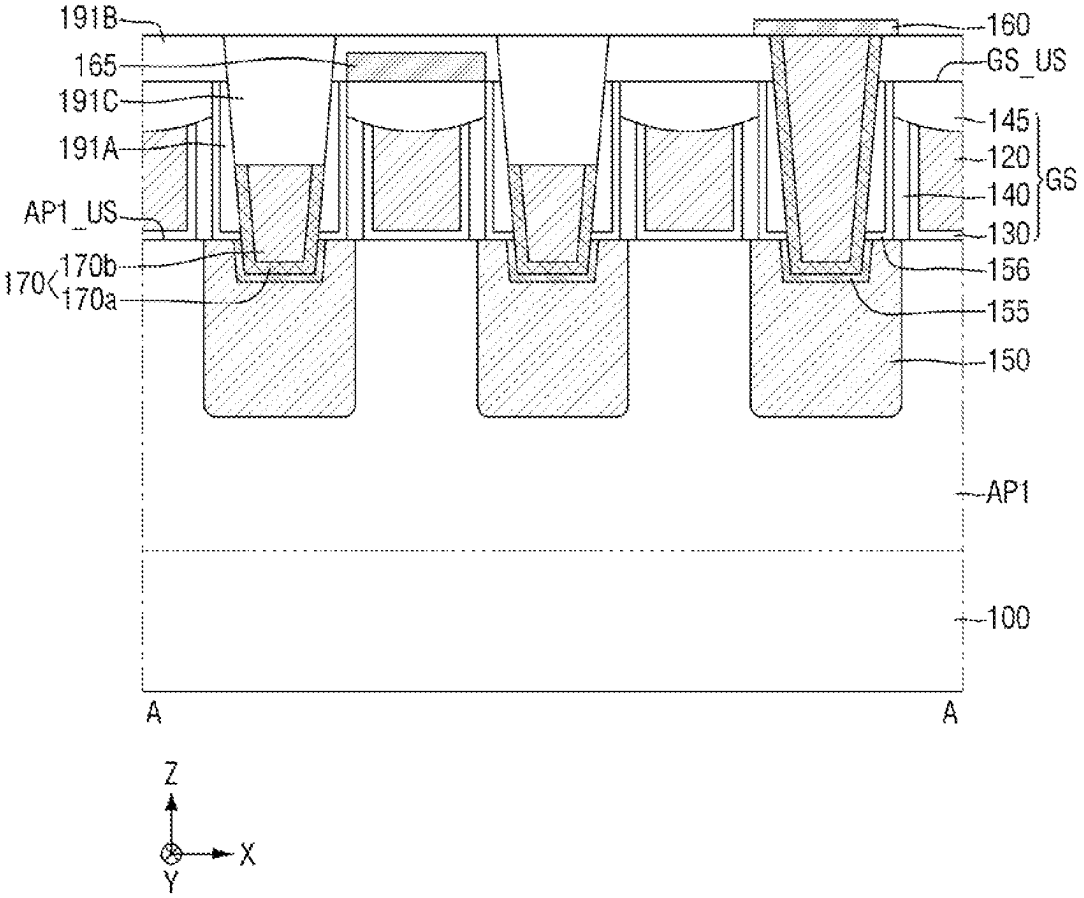
191B
165
191C
191A
AP1_US
170
170b
170a
160
GS_US
145
120
140
130
GS
156
155
150
AP1
100
A
A
Z
X
Y

FIG. 34

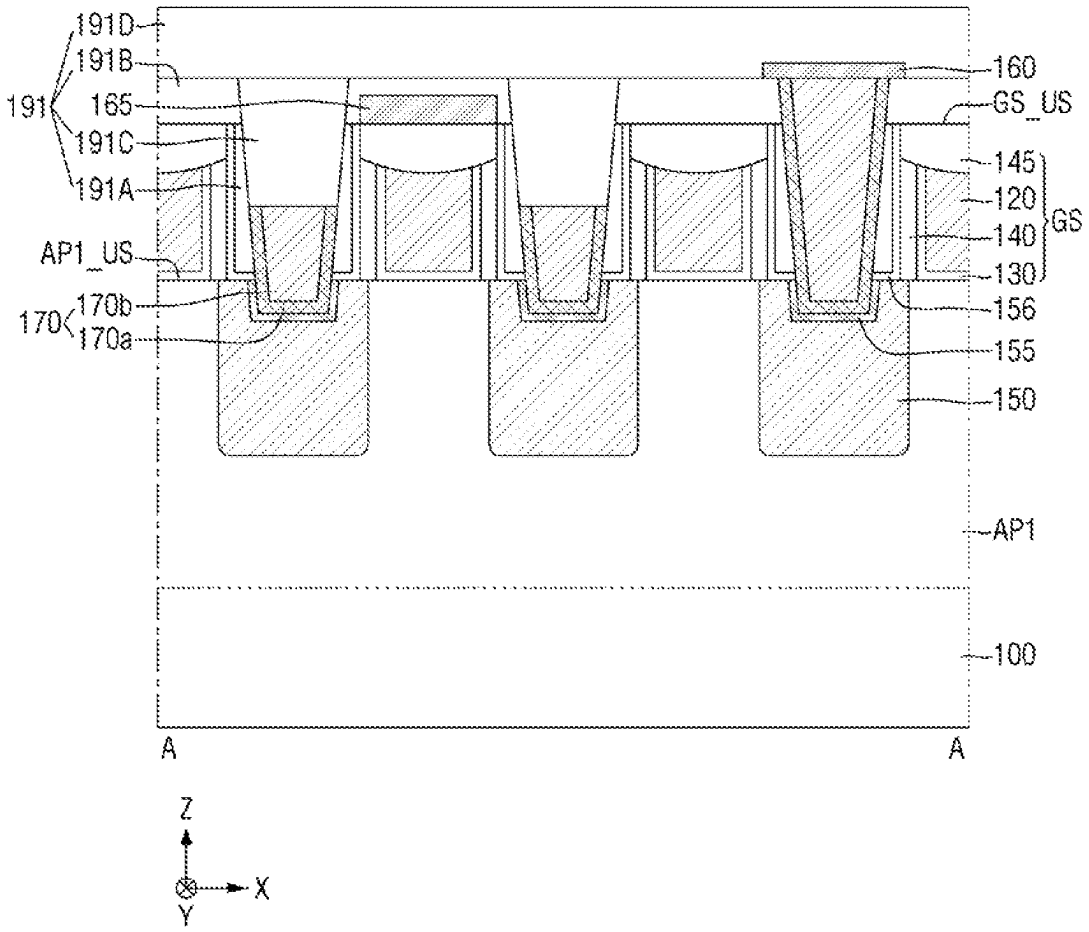
191D
191B
191
165
191C
191A
AP1_US
170
170b
170a
160
GS_US
145
120
140
130
GS
156
155
150
AP1
100
A
A
Z
X
Y

FIG. 35

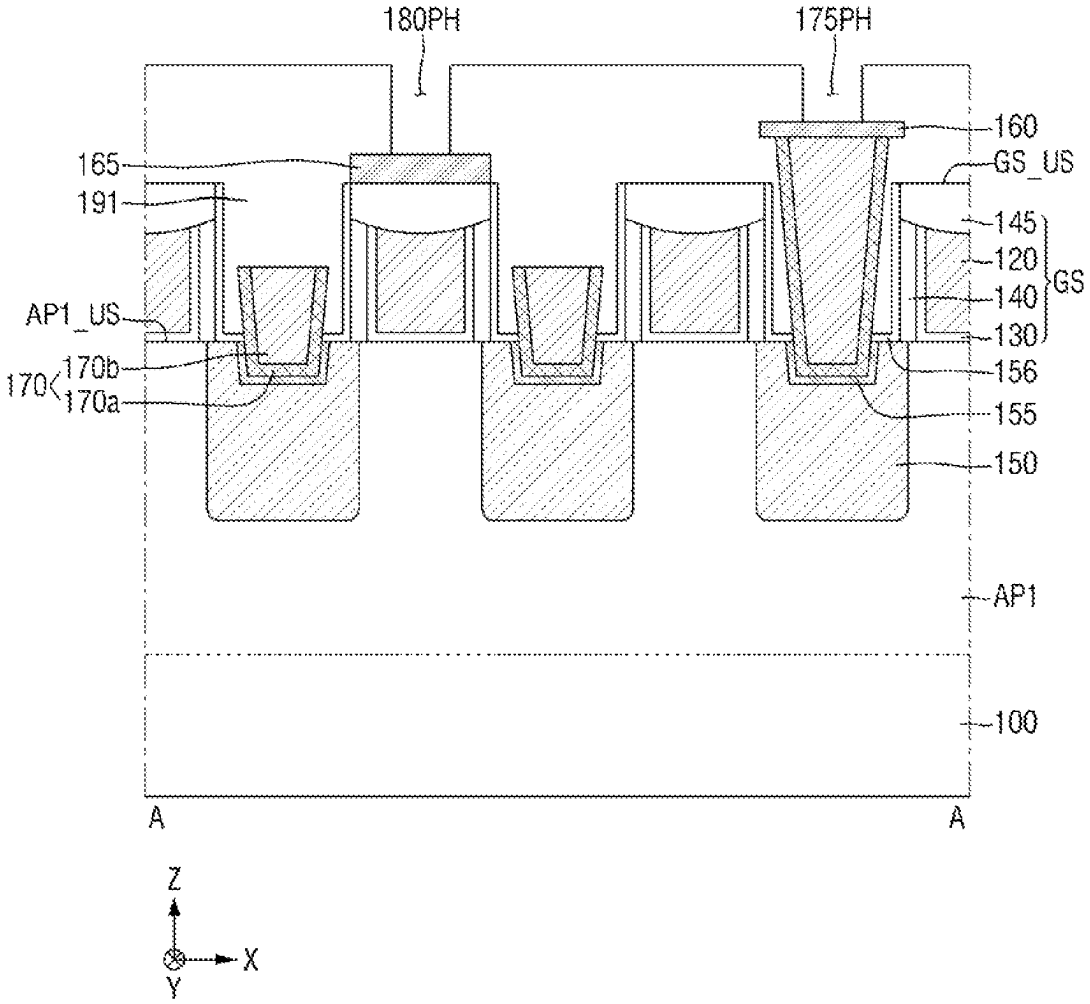
180PH
175PH
160
165
GS_US
191
145
120
GS
140
AP1_US
130
170b
170
170a
156
155
150
AP1
100
A
A
Z
X
Y

FIG. 36

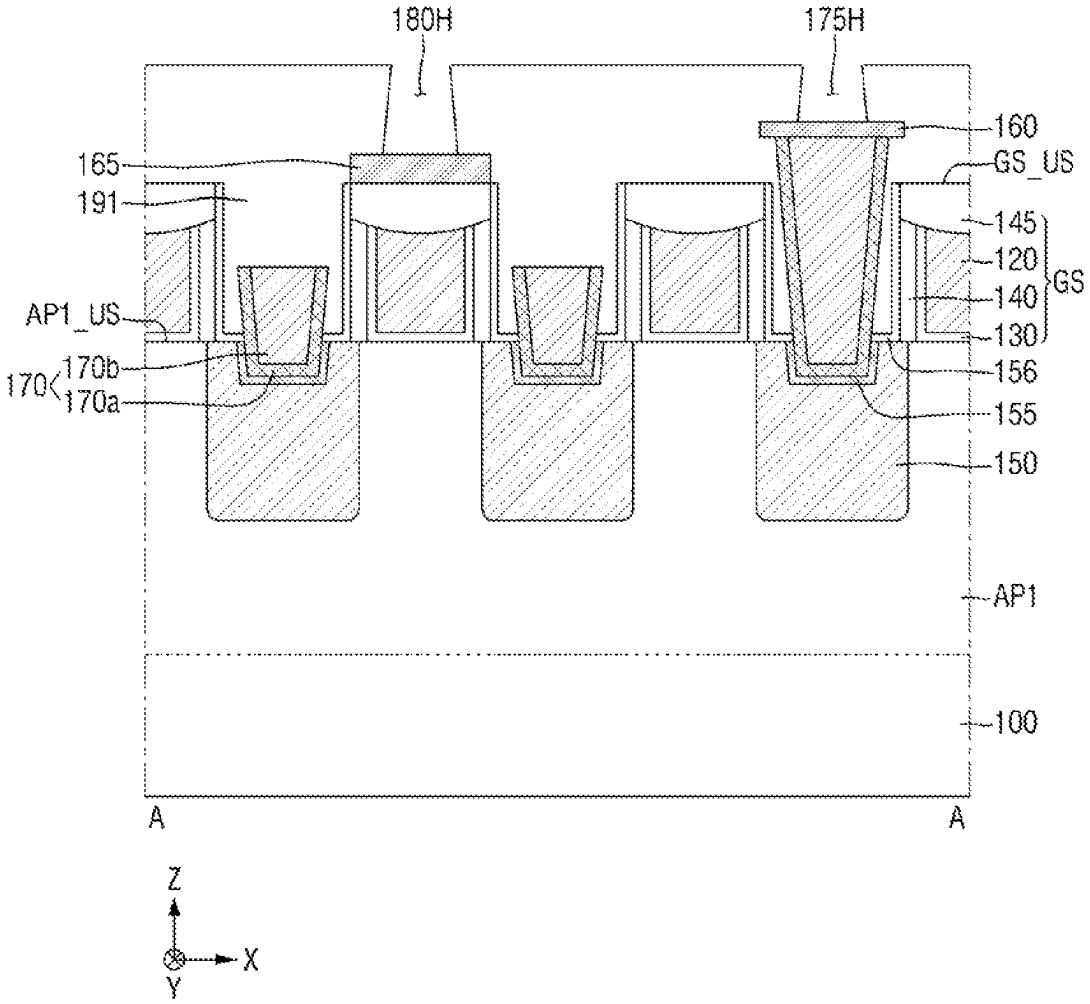
180H
175H
160
165
GS_US
191
145
120
GS
140
AP1_US
130
170b
170
170a
156
155
150
AP1
100
A
A
Z
X
Y

FIG. 37

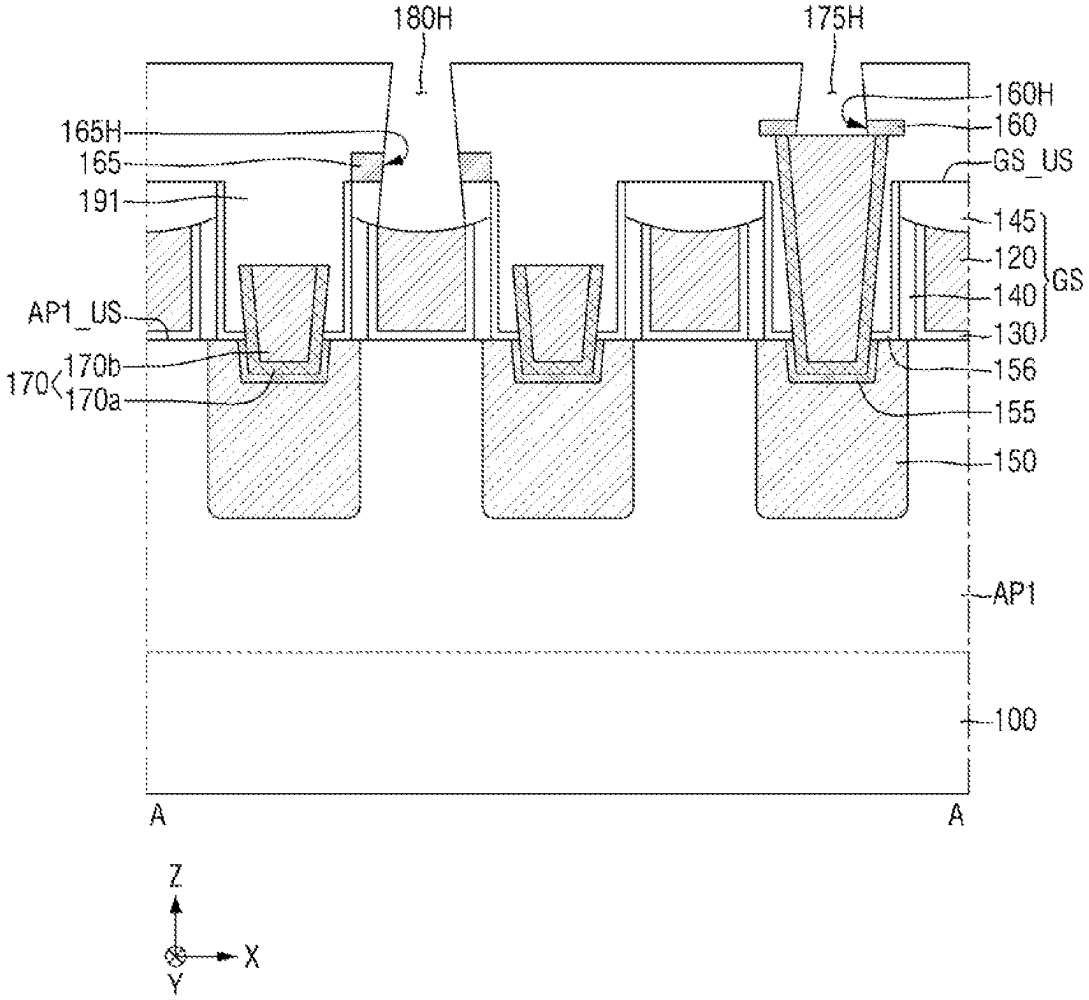
180H
175H
160H
160
165H
165
GS_US
191
145
120
GS
140
130
AP1_US
170b
170
170a
156
155
150
AP1
100
A
A
Z
X
Y

FIG. 38

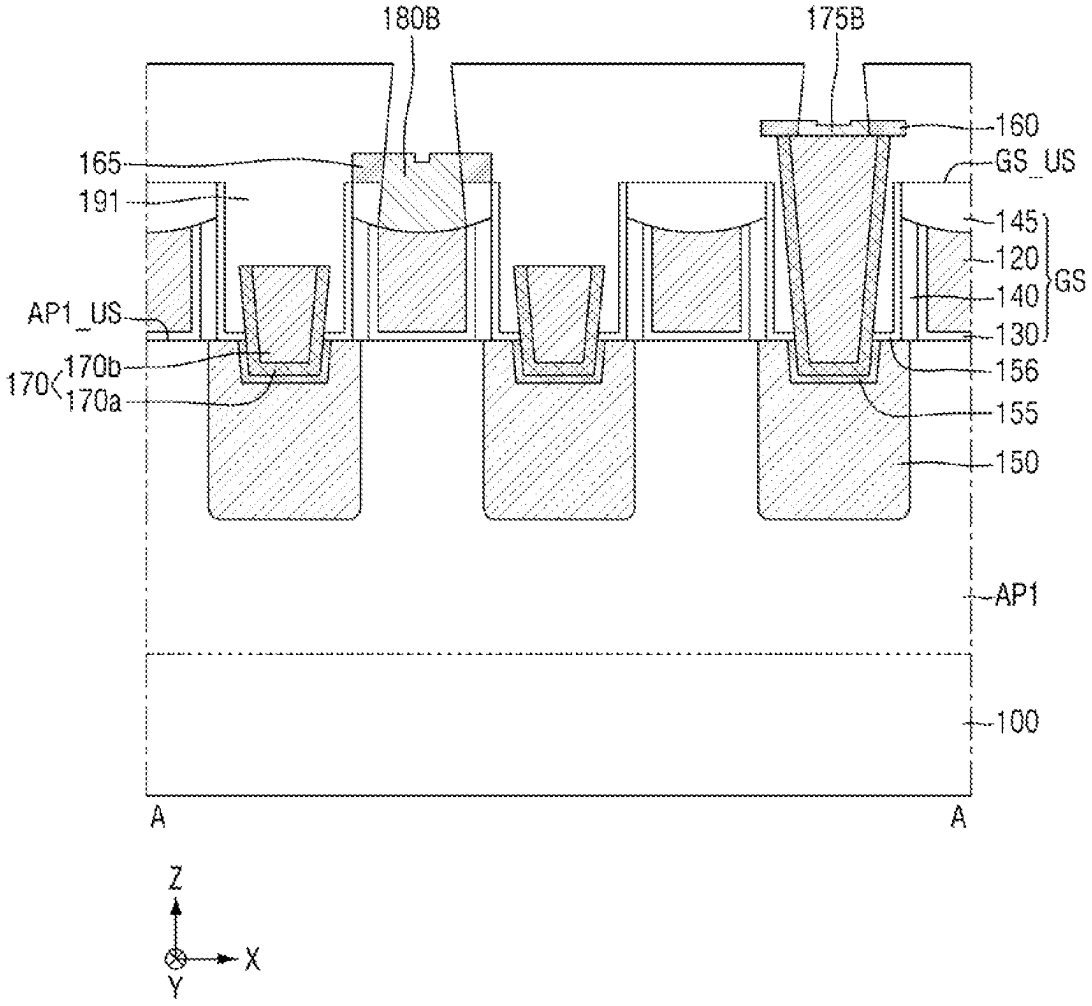
180B
175B
160
165
GS_US
191
145
120
GS
140
AP1_US
130
170b
170
170a
156
155
150
AP1
100
A
A
Z
X
Y

FIG. 39

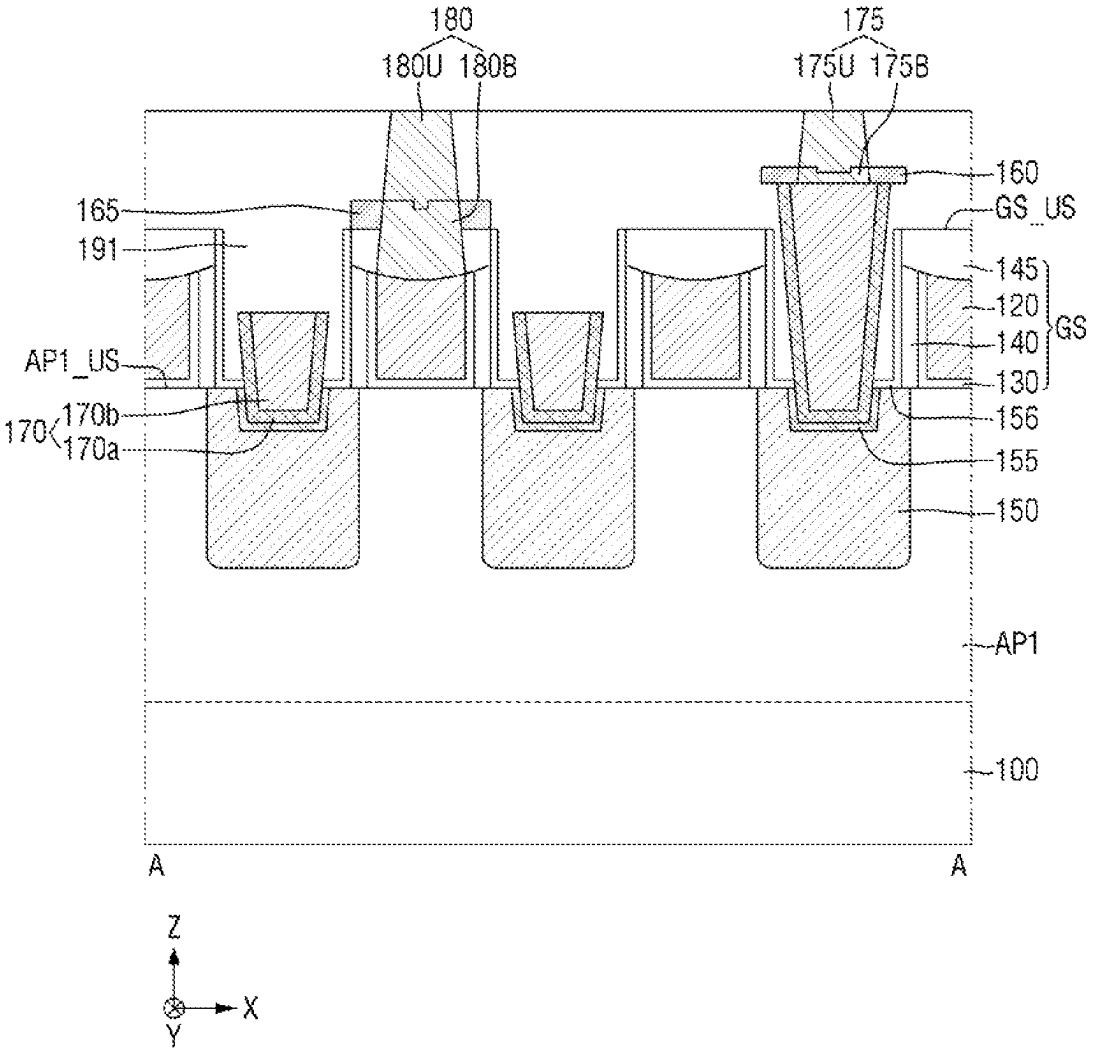
180
180U 180B
175
175U 175B
160
165
GS_US
191
145
120
GS
140
AP1_US
130
170b
170
170a
156
155
150
AP1
100
A
A
Z
X
Y

SEMICONDUCTOR DEVICE

CROSS-REFERENCE TO RELATED APPLICATION

This application claims priority under 35 U.S.C. § 119 to Korean Patent Application No. 10-2021-0164581, filed on Nov. 25, 2021 in the Korean Intellectual Property Office, the disclosure of which is incorporated by reference in its entirety herein.

1. TECHNICAL FIELD

The present disclosure relates to a semiconductor device.

2. DISCUSSION OF RELATED ART

A scaling technology for increasing the density of semiconductor devices has been proposed having a multi gate transistor in which a multi-channel active pattern (e.g., a silicon body) having a fin or nanowire shape is formed on a substrate and a gate is formed on a surface of the multi-channel active pattern.

Since such a multi gate transistor utilizes a three-dimensional channel, scaling is easily performed. Further, even if a gate length of the multi gate transistor is not increased, the current control capability may be increased. Furthermore, a SCE (short channel effect) in which potential of a channel region is influenced by a drain voltage may be effectively suppressed.

On the other hand, as a pitch size of the semiconductor device decreases, the semiconductor device should have a decrease in capacitance and an increase in electrical stability between contacts.

SUMMARY

Aspects of the present disclosure provide a semiconductor device capable of increasing element performance and reliability.

Aspects of the present disclosure also provide a method for manufacturing the semiconductor device capable of increasing element performance and reliability.

However, aspects of the present disclosure are not restricted to the one set forth herein. The above and other aspects of the present disclosure will become more apparent to one of ordinary skill in the art to which the present disclosure pertains by referencing the detailed description of the present disclosure given below.

According to an embodiment of the present disclosure, a semiconductor device includes a gate structure including a gate electrode on a substrate. A source/drain pattern is disposed on the substrate and is positioned on a side surface of the gate electrode. A source/drain contact is disposed on the source/drain pattern and is connected to the source/drain pattern. A first conductive pad is on the source/drain contact. A second conductive pad is on the gate structure. A via plug penetrates the first conductive pad and is connected to the source/drain contact. A gate contact penetrates the second conductive pad and is connected to the gate electrode. A portion of the via plug protrudes from an upper surface of the first conductive pad. A portion of the gate contact protrudes from an upper surface of the second conductive pad. A height from an upper surface of the gate structure to an upper surface of the via plug is equal to a height from the upper surface of the gate structure to an upper surface of the gate contact.

According to an embodiment of the present disclosure, a semiconductor device includes a gate structure on a substrate. The gate structure includes a gate electrode and a gate capping, pattern on the gate electrode. A source/drain pattern is disposed on the substrate and is positioned on a side surface of the gate electrode. A source/drain contact is disposed on the source/drain pattern and is connected to the source/drain pattern. A first conductive pad is on the source/drain contact. A second conductive pad is on the gate capping pattern. A via plug penetrates the first conductive pad and is connected to the source/drain contact. A gate contact penetrates the second conductive pad and the gate capping pattern, and is connected to the gate electrode. A width of the via plug decreases as a distance from an upper surface of the first conductive pad increases. A width of the gate contact decreases as a distance from an upper surface of the second conductive pad increases.

According to an embodiment of the present disclosure, a semiconductor device includes a multi-channel active pattern on a substrate. A gate structure is disposed on the multi-channel active pattern. The gate structure includes a gate electrode and a gate capping pattern. The gate capping pattern is disposed on the gate electrode. A source/drain pattern is disposed on the substrate and is positioned on a side surface of the gate electrode. A source/drain contact is disposed on the source/drain pattern and is connected to the source/drain pattern. A first conductive pad is on the source/drain contact. A second conductive pad is on the gate capping pattern. A via plug penetrates the first conductive pad and is connected to the source/drain contact. A gate contact penetrates the second conductive pad and the gate capping pattern and is connected to the gate electrode. The via plug includes a lower via plug disposed in the first conductive pad and an upper via plug on the lower via plug. The gate contact includes a lower gate contact disposed in the second conductive pad and an upper gate contact on the lower gate contact. A width of an upper surface of the upper via plug is less than a width of a lower surface of the via plug disposed on an upper surface of the first conductive pad. A width of an upper surface of the upper gate contact is less than a width of a lower surface of the gate contact disposed on an upper surface of the second conductive pad.

BRIEF DESCRIPTION OF THE DRAWINGS

The above and other aspects and features of the present disclosure will become more apparent by describing in detail embodiments thereof with reference to the attached drawings, in which:

FIG. **1** is a layout diagram of a semiconductor device according to an embodiment of the present disclosure.

FIG. **2** is a cross-sectional view of a semiconductor device taken along line A-A of FIG. **1** according to an embodiment of the present disclosure.

FIG. **3** is an enlarged cross-sectional view of a semiconductor device showing a portion P of FIG. **2** according to an embodiment of the present disclosure.

FIG. **4** is an enlarged cross-sectional view of a semiconductor device showing a portion Q of FIG. **2** according to an embodiment of the present disclosure.

FIG. **5** is a cross-sectional view of a semiconductor device taken along line B-B of FIG. **1** according to an embodiment of the present disclosure.

FIG. **6** is a cross-sectional view of a semiconductor device taken along line C-C of FIG. **1** according to an embodiment of the present disclosure.

FIGS. **7** to **10** are enlarged cross-sectional views of a semiconductor device showing, a portion P of FIG. **2** according to some embodiments of the present disclosure.

FIGS. **11** and **12** are enlarged cross-sectional views of a semiconductor device showing a portion Q of FIG. **2** according to some embodiments of the present disclosure.

FIGS. **13** and **14** are enlarged cross-sectional views of a semiconductor device showing portions P and Q of FIG. **2**, respectively, according to some embodiments of the present disclosure.

FIGS. **15** and **16** are cross-sectional views of a semiconductor device taken along line A-A of FIG. **1** according to some embodiments of the present disclosure.

FIGS. **17** to **19** are cross-sectional views of a semiconductor device taken along line A-A of FIG. **1** according to some embodiments of the present disclosure.

FIGS. **20** to **22** are cross-sectional views of a semiconductor device taken along line B-B of FIG. **1** according to some embodiments of the present disclosure.

FIG. **23** is a layout diagram of a semiconductor device according to embodiment of the present disclosure.

FIGS. **24** to **25** are cross-sectional views of a semiconductor device taken along line A-A of FIG. **23** according to some embodiments of the present disclosure.

FIG. **26** is a cross-sectional view of a semiconductor device taken along line B-B of FIG. **23** according to an embodiment of the present disclosure.

FIGS. **27** and **28** are layout diagrams of a semiconductor device according to some embodiments of the present disclosure.

FIGS. **29** to **39** are cross-sectional views taken along line A-A of FIG. **1** of intermediate stage diagrams of a method for manufacturing a semiconductor device according to some embodiments of the present disclosure.

DETAILED DESCRIPTION OF THE EMBODIMENTS

Although drawings of a semiconductor device according to some embodiments show a fin type transistor (FinFET) including a channel region of a fin-type pattern shape, a transistor including a nanowire or a nanosheet, and a MBCFET™ (Multi-Bridge Channel Field Effect Transistor) as an example, embodiments of the present disclosure are not necessarily limited thereto. The semiconductor device according to some embodiments may, of course, include a tunneling transistor (tunneling FET) or a three-dimensional (3D) transistor. The technical idea of the present disclosure may be applied to a planar transistor, and the semiconductor device according to some embodiments may include a planar transistor to which the technical idea of the present disclosure is applied. In addition, the technical idea of the present disclosure may be applied to transistors based on two-dimensional materials (2D material based FETs) and a heterostructure thereof.

Further, the semiconductor device according to some embodiments may also include a bipolar junction transistor, a laterally diffused metal oxide semiconductor (LDMOS), or the like.

A semiconductor device according to some embodiments will be described referring to FIGS. **1** to **6**.

FIG. **1** is a layout diagram for explaining the semiconductor device according to some embodiments. FIG. **2** is a cross-sectional view taken along A-A of FIG. **1**. FIG. **3** is an enlarged view showing a portion P of FIG. **2**. FIG. **4** is an enlarged view showing a portion Q of FIG. **2**. FIG. **5** is a cross-sectional view taken along B-B of FIG. **1**. FIG. **6** is a cross-sectional view taken along C-C of FIG. **1**. For convenience of explanation, FIG. **1** does not show a wiring line **205**.

For reference, a via plug **175** and a gate contact **180** are shown to be disposed adjacent to each other in a first direction X on a single first active pattern AP**1**. However, such arrangement of the via plug **175** and the gate contact **180** is merely for convenience of explanation and embodiments of the present disclosure are not necessarily limited thereto.

Referring to FIGS. **1** to **6**, a semiconductor device according to some embodiments may include at least one first active patterns AP**1**, at least one second active patterns AP**2**, at least one gate electrodes **120**, a first source/drain contact **170**, a second source/drain contact **270**, a gate contact **180**, a first conductive pad **160**, a second conductive pad **165**, a first via plug **175**, a second via plug **275**, and a wiring line **205**.

The substrate **100** may include a first active region RX**1**, a second active region RX**2**, and a field region FX. The field region FX may be formed directly adjacent to the first active region RX**1** and the second active region RX**2**. The field region FX may form a boundary with the first active region RX**1** and the second active region RX**2**.

The first active region RX**1** and the second active region RX**2** are spaced apart from each other (e.g., in a second direction Y). The first active region RX**1** and the second active region RX**2** may be separated by the field region FX.

For example, the field insulating film **105** may be disposed around the first active region RX**1** and the second active region RX**2** spaced apart from each other. In an embodiment, a portion of the field insulating film **105** between the first active region RX**1** and the second active region RX**2** may be the field region FX. In an embodiment in which the semiconductor device includes a transistor, a portion in which a channel region of the transistor is formed may be an active region, and a portion which divides the channel region of the transistor formed in the active region may be a field region. Alternatively, the active region may be a portion in which fin-type patterns or nanosheets used as the channel region of the transistor are formed, and the field region may be a region in which the fin-type pattern or nanosheet used as the channel region is not formed.

As shown in FIGS. **5** and **6**, the field region FX may be defined by a deep trench DT. However, embodiments of the present disclosure are not necessarily limited thereto. In addition, one of ordinary skill in the art in the technical field to which the present disclosure belongs may distinguish which part is the field region and which part is the active region.

As an example, one of the first active region RX**1** and the second active region RX**2** may be a PMOS formation region and the other may be an NMOS formation region. As another example, the first active region RX**1** and the second active region RX**2** may both be a PMOS formation region. As yet another example, the first active region RX**1** and the second active region RX**2** may be the NMOS formation region.

In an embodiment, the substrate **100** may be a silicon substrate or an SOI (silicon-on-insulator). In an embodiment, the substrate **100** may include, but is not necessarily limited to, silicon germanium, SGOI (silicon germanium on insulator), indium antimonide, lead tellurium compounds, indium arsenic, indium phosphide, gallium arsenide or gallium antimonide.

At least one or more first active patterns AP**1** may be formed in the first active region RX**1**. The first active pattern

AP1 may protrude from the substrate **100** of the first active region RX**1**. In an embodiment, the first active pattern AP**1** may extend along the first direction X on the substrate **100**. The first active pattern AP**1** may be defined by a fin trench FT extending in the first direction X.

For example, the first active pattern AP**1** may include a long side extending in the first direction X, and a short side extending in the second direction Y. Here, the first direction X may intersect the second direction Y and the third direction Z. Also, the second direction Y may intersect the third direction Z. The third direction Z may be a thickness direction of the substrate **100**. The first and second directions X, Y may be parallel to an upper surface of the substrate **100**.

At least one or more second active patterns AP**2** may be formed on the second active region RX**2**. A description of the second active pattern AP**2** may be substantially the same as the description of the first active pattern AP**1** and a repeated description may be omitted for convenience of explanation.

The first active pattern AP**1** and the second active pattern AP**2** may each be a multi-channel active pattern. In the semiconductor device according to some embodiments, each of the first active pattern AP**1** and the second active pattern AP**2** may be, for example, a fin-type pattern.

The first active pattern AP**1** and the second active pattern AP**2** may each be used as the channel region of the transistor. Although the number of each of the first active patterns AP**1** and second active patterns AP**2** is shown as three, this is merely for convenience of explanation, and embodiments of the present disclosure are not necessarily limited thereto. The number of each of the first active patterns AP**1** and second active patterns AP**2** may be one or more.

Each of the first active pattern AP**1** and the second active pattern AP**2** may be a part of the substrate **100**, and may include an epitaxial layer that is grown from the substrate **100**. In an embodiment, the first active pattern AP**1** and the second active pattern AP**2** may include, for example, silicon or germanium, which is an elemental semiconductor material. Further, the first active pattern AP**1** and the second active pattern AP**2** may include a compound semiconductor, and may include, for example, a group IV-IV compound semiconductor or a group III-V compound semiconductor.

In an embodiment, the group IV-IV compound semiconductor may be, for example, a binary compound or a ternary compound including at least two OF more of carbon (C), silicon (Si), germanium (Ge) and tin (Sn), or a compound obtained by doping these elements with a group IV element.

In an embodiment, the group III-V compound semiconductor may be, for example, one of a binary compound, a ternary compound or a quaternary compound formed by combining at least one of aluminum (Al), gallium (Ga) and indium (In) as a group III element with one of phosphorus (P), arsenic (As) and antimony (Sb) as a group V element.

As an example, the first active pattern AP**1** and the second active pattern AP**2** may include the same material. For example, the first active pattern AP**1** and the second active pattern AP**2** may be silicon fin-type patterns, respectively. Alternatively, for example, the first active pattern AP**1** and the second active pattern AP**2** may be fin-type patterns including a silicon-germanium pattern, respectively. In an embodiment, the first active pattern AP**1** and the second active pattern AP**2** may include different materials from each other. For example, the first active pattern AP**1** may be a silicon fin-type pattern and the second active pattern AP**2** may be a fin-type pattern including a silicon-germanium pattern.

The field insulating film **105** may be formed on the substrate **100**. The field insulating film **105** may be formed over the first active region RX**1**, the second active region RX**2**, and the field region FX. The field insulating film **105** may fill the deep trench DT.

The field insulating film **105** may be formed on a part of the side walls of the first active pattern AP**1** and a part of the side walls of the second active pattern AP**2**. The first active pattern AP**1** and the second active pattern AP**2** may each protrude upward from the upper surface of the field insulating film **105** (e.g., in the third direction Z). In an embodiment, the field insulating film **105** may include, for example, an oxide film, a nitride film, an oxynitride film or a combination film thereof.

At least one or more gate structures GS may be disposed on the substrate **100**. For example, at least one or more gate structures GS may be disposed on the field insulating film **105**. The gate structure GS may extend in the second direction Y. The adjacent gate structures GS may be spaced apart from each other in the first direction X.

The gate structure GS may be disposed on the first active pattern AP**1** and the second active pattern AP**2**. The gate structure GS may intersect the first active pattern AP**1** and the second active pattern AP**2**.

Although the gate structure GS is shown as disposed over the first active region RX**1** and the second active region RX**2**, this is only for convenience of explanation, and the embodiments of the present disclosure are not necessarily limited thereto. For example, a part of the gate structure GS is divided into two parts by a gate separation structure disposed on the field insulating film **105**, and may be disposed on the first active region RX**1** and the second active region RX**2**.

The gate structure GS may include, for example, a gate electrode **120**, a gate insulating film **130**, a gate spacer **140**, and a gate capping pattern **145**.

The gate electrode **120** may be disposed on the first active pattern AP**1** and the second active pattern AP**2**. The gate electrode **120** may intersect the first active pattern AP**1** and the second active pattern AP**2**. The gate electrode **120** may surround the first active pattern AP**1** and the second active pattern AP**2** protruding from the upper surface of the field insulating film **103**. In an embodiment, the gate electrode **120** may include a long side extending in the second direction Y and a short side extending in the first direction X.

In an embodiment, an upper surface **120**US of the gate electrode may be, but is not necessarily limited to, a concave curved surface that is recessed towards an upper surface AP**1**_US of the first active pattern AP**1**. However, in an embodiment, unlike the shown example, the upper surface **120**US of the gate electrode may be a flat surface.

In an embodiment, the gate electrode **120** may include, but is not necessarily limited to, for example, at least one of titanium nitride (TiN), tantalum carbide (TaC), tantalum nitride (TaN), titanium silicon nitride (TiSiN), tantalum silicon nitride (TaSiN), tantalum titanium nitride (TaTiN), titanium aluminum nitride (TiAlN), tantalum aluminum nitride (TaAlN), tungsten nitride (WN), ruthenium (Ru), titanium aluminum (TiAl), titanium aluminum carbonitride (TiAlC—N), titanium aluminum carbide (TiAlC) titanium carbide (TiC), tantalum carbonitride (TaCN), tungsten (W), aluminum (Al), copper (Cu), cobalt (Co), titanium (Ti), tantalum (Ta), nickel (Ni), platinum (Pt), nickel platinum (Ni—Pt), niobium (Nb), niobium nitride (NbN), niobium carbide (NbC), molybdenum (Mo), molybdenum nitride (MoN), molybdenum carbide (MoC), tungsten carbide

(WC), rhodium (Rb), palladium (Pd), iridium (Ir), osmium (Os), silver (Ag), gold (Au), zinc (Zn), vanadium (V), and combinations thereof.

In an embodiment, the gate electrode **120** may include conductive metal oxides, conductive metal oxynitrides and the like, and may also include oxidized forms of the aforementioned materials.

The gate electrodes **120** may be disposed on both sides (e.g., lateral sides in a first direction X) of a first source/drain pattern **150** to be described later. For example, the gate electrodes **120** may be disposed on both sides in the first direction X of the first source/drain pattern **150**.

As an example, both the gate electrodes **120** disposed on both sides of the first source/drain pattern **150** may be normal gate electrodes used as the gate of the transistor. However, embodiments of the present disclosure are not necessarily limited thereto. For example, in an embodiment the gate electrode **120** disposed on one side of the first source/drain pattern **150** is used as the gate of the transistor, but the gate electrode **120** disposed on the other side of the first source/drain pattern **150** may be a dummy gate electrode.

In an embodiment, the gate electrodes **120** may be disposed on either side of a second source/drain pattern **250** to be described below. The gate structure GS may be disposed on both sides in the first direction X of the second source/drain pattern **250**.

The gate spacer **140** may be disposed on the side walls of the gate electrode **120**. The gate spacer **140** may extend in the second direction Y. In an embodiment, the gate spacer **140** may include, for example, at least one of silicon nitride (SiN), silicon oxynitride (SiON), silicon oxide (SiO_2), silicon oxycarbonitride (SiOCN), silicon boronitride (SiBiN), silicon oxyboronitride (SiOBN), silicon oxycarbide (SiOC), and combinations thereof.

The gate insulating film **130** may extend along side walls and a bottom surface of the gate electrode **120**. The gate insulating film **130** may be formed on the first active pattern AP**1**, the second active pattern AP**2** and the field insulating film **105**. The gate insulating film **130** may be formed between the gate electrode **120** and the gate spacer **140**.

In an embodiment, the gate insulating film **130** may be formed along the profile of the first active pattern AP**1** protruding upward from the field insulating film **105** and the upper surface of the field insulating film **105**. In an embodiment, an interface film may be further formed along the profile of the first active pattern AP**1** protruding upward from the field insulating film **105**. The gate insulating films **130** may each be formed on the interface film. In an embodiment, the gate insulating film **130** may be formed along the profile of the second active pattern AP**2** protruding upward from the field insulating film **105**.

In an embodiment, the gate insulating film **130** may include silicon oxide, silicon oxynitride, silicon nitride, or a high dielectric constant material having a higher dielectric constant than that of silicon oxide. The high dielectric constant material may include, for example, one or more of boron nitride, hafnium oxide, hafnium silicon oxide, hafnium aluminum oxide, lanthanum oxide, lanthanum aluminum oxide, zirconium oxide, zirconium silicon oxide, tantalum oxide, titanium oxide, barium strontium titanium oxide, barium titanium oxide, strontium titanium oxide, yttrium oxide, aluminum oxide, lead scandium tantalum oxide or lead zinc niobate.

The semiconductor device according to some embodiments may include an NC (Negative Capacitance) FET that uses a negative capacitor. For example, the gate insulating film **130** may include a ferroelectric material film having ferroelectric properties, and a paraelectric material film having paraelectric properties.

The ferroelectric material film may have a negative capacitance, and the paraelectric material film may have a positive capacitance. For example, if two or more capacitors are connected in series and the capacitance of each capacitor has a positive value, the overall capacitances decrease from the capacitance of each of the individual capacitors. On the other hand, if at least one of the capacitances of two or more capacitors connected in series has a negative value, the overall capacitances may be greater than an absolute value of each of the individual capacitances, while having a positive value.

When the ferroelectric material film having the negative capacitance and the paraelectric material film having the positive capacitance are connected in series, the overall capacitance values of the ferroelectric material film and the paraelectric material film connected in series may increase. By the use of the increased overall capacitance value, a transistor including the ferroelectric material film may have a subthreshold swing (SS) below 60 mV/decade at room temperature.

The ferroelectric material film may have ferroelectric properties. In an embodiment, the ferroelectric material film may include, for example, at least one of hafnium oxide, hafnium zirconium oxide, barium strontium titanium oxide, barium titanium oxide, and lead zirconium titanium oxide. Here, as an example, the hafnium zirconium oxide may be a material obtained by doping hafnium oxide with zirconium (Zr). As another example, the hafnium zirconium oxide may be a compound of hafnium (Hf), zirconium (Zr), and oxygen (O).

The ferroelectric material film may further include a doped dopant. For example, in an embodiment the dopant may include at least one of aluminum (Al), titanium (Ti), niobium (Nb), lanthanum (La), yttrium (Y), magnesium (Mg), silicon (Si), calcium (Ca), cerium (Ce), dysprosium (Dy), erbium (Er), gadolinium (Gd), germanium (Ge), scandium (Sc), strontium (Sr), and tin (Sn). The type of dopant included in the ferroelectric material film may vary, depending on which type of ferroelectric material is included in the ferroelectric material film.

In an embodiment in which the ferroelectric material film includes hafnium oxide, the dopant included in the ferroelectric material film may include, for example, at least one of gadolinium (Gd), silicon (Si), zirconium (Zr), aluminum (Al), and yttrium (Y).

In an embodiment in which the dopant is aluminum (Al), the ferroelectric material film may include 3 to 8 at % (atomic %) aluminum. Here, a ratio of the dopant may be a ratio of aluminum to the sum of hafnium and aluminum.

In an embodiment in which the dopant is silicon (Si), the ferroelectric material film may include 2 to 10 at % silicon, in an embodiment in which the dopant is yttrium (Y), the ferroelectric material film may include 2 to 1.0 at % yttrium. In an embodiment in which the dopant is gadolinium (Gd), the ferroelectric material film may include 1 to 7 at % gadolinium. In an embodiment in which the dopant is zirconium (Zr), the ferroelectric material film may include 50 to 80 at % zirconium.

The paraelectric material film may have the paraelectric properties. In an embodiment, the paraelectric material film may include at least one of, for example, a silicon oxide and a metal oxide having a high dielectric constant. The metal oxide included in the paraelectric material film may include,

for example, but is not necessarily limited to, at least one of hafnium oxide, zirconium oxide, and aluminum oxide.

The ferroelectric material film and the paraelectric material film may include the same material. The ferroelectric material film has the ferroelectric properties, but the paraelectric material film may not have the ferroelectric properties. For example, in an embodiment in which the ferroelectric material film and the paraelectric material film include hafnium oxide, a crystal structure of hafnium oxide included in the ferroelectric material film is different from a crystal structure of hafnium oxide included in the paraelectric material film.

The ferroelectric material film may have a thickness having the ferroelectric properties. In an embodiment, a thickness of the ferroelectric material film may be, for example, but is not necessarily limited to, 0.5 to 10 nm. Since a critical thickness that exhibits the ferroelectric properties may vary for each ferroelectric material, the thickness of the ferroelectric material film may vary depending on the ferroelectric material.

As an example, the gate insulating film **130** may include one ferroelectric material film. However, embodiments of the present disclosure are not necessarily limited thereto. For example, in an embodiment, the gate insulating, film **130** may include a plurality of ferroelectric material films spaced apart from each other. The gate insulating film **130** may have a stacked film structure in which the plurality of ferroelectric material films and the plurality of paraelectric material films are alternately stacked.

The gate capping pattern **145** may be disposed on the upper surface **120**US of the gate electrode and the upper surface of the gate spacer **140**. In an embodiment, the gate capping pattern **145** may include, for example, at least one of silicon nitride (SiN), silicon oxynitride (SiON), silicon oxide (SiO_2), silicon carbonitride (SiCN), silicon oxycarbonitride (SiOCN), and combinations thereof.

Unlike the shown example, the gate capping pattern **145** may be disposed between the gate spacers **140** (e.g., in the first direction X). In this embodiment, an upper surface of the gate capping pattern **145** may be disposed on the same plane as the upper surface of the gate spacer **140**. In the semiconductor device according to some embodiments, the upper surface of the gate capping pattern **145** may be an upper surface GS_US of the gate structure.

A first source/drain pattern **150** may be disposed on the first active pattern AP**1**. The first source/drain pattern **150** may be disposed on the substrate **100**. The first source/drain pattern **150** may be disposed on the side surface of the gate structure GS. The first source/drain pattern **150** may be disposed between the gate structures GS (e.g., in the first direction X).

The first source/drain pattern **150** may be disposed on at least one side of the gate structure GS. For example, the first source/drain pattern **150** may be disposed on both sides of the gate structure GS. Unlike the shown example, the first source/drain pattern **150** may be disposed on only one side of the gate structure GS and may not be disposed on the other side of the gate structure GS.

In an embodiment, the first source/drain pattern **150** may include an epitaxial pattern. The first source/drain pattern **150** may be included in the source/drain of a transistor that uses the first active pattern AP**1** as a channel region.

The first source/drain pattern **150** may be connected to a channel pattern portion used as a channel in the first active pattern AP**1**. Although the first source/drain pattern **150** is shown as a merged form of three epitaxial patterns formed on each first active pattern AP**1**, this is merely for convenience of explanation, and embodiments of the present disclosure are not necessarily limited thereto. For example, the epitaxial patterns formed on each of the first active patterns AP**1** may be separated from each other.

As an example, an air gap may be disposed in a space between the first source/drain patterns **150** merged with the field insulating films **105**. In an embodiment, an insulating material may be filled in the space between the first source/drain patterns **150** merged with the field insulating film **105**.

In an embodiment, a source/drain pattern as described above may be disposed on the second active pattern AP**2** between the gate structures GS.

A source drain etching stop film **156** may be disposed on an upper surface of the field insulating film **105**, side walls of the gate structure GS, an upper surface of the first source/drain pattern **150**, and side walls of the first source/drain pattern **150**. In an embodiment, the source/drain etching stop film **156** may be disposed on the upper surface of the second source/drain pattern **250** and on the side wall of the second source/drain pattern **250**.

The source/drain etching stop film **156** may include a material having an etching selectivity with respect to a first interlayer insulating film **191** to be described later. In an embodiment, the source/drain etching stop film **156** may include, for example, at least one of silicon nitride (SiN), oxynitride (SiON), silicon oxycarbonitride (SiOCN), silicon boronitride (SiBN), silicon oxyboronitride (SiOBN), silicon oxycarbide (SiOC), and combinations thereof. However, embodiments of the present disclosure are not necessarily limited thereto. For example, unlike the shown example, the source/drain etching stop film **156** may not be formed.

The first source/drain contact **170** may be disposed on the first active region RX**1**. The second source/drain contact **270** may be disposed on the second active region RX**2**. The first source/drain contact **170** may be connected to the first source/drain pattern **150** formed in the first active region RX**1**. In an embodiment, the second source/drain contact **270** may be connected to a source/drain pattern formed in the second active region RX**2**.

Unlike the shown example, a part of the first source/drain contact **170** may be directly connected to a part of the second source/drain contact **270**. For example, in a semiconductor device according to some embodiments, at least one or more source/drain contacts may be disposed over the first active region RX**1** and the second active region RX**2**.

Since the contents relating to the second source/drain contact **270** are substantially the same as those relating to the first source/drain contact **170**, the following description will be provided, using the first source/drain contact **170** on the first active pattern AP**1** and a repeated description may be omitted for convenience of explanation.

The first source/drain contact **170** passes through the source/drain etching stop film **156** and may be connected to the first source/drain pattern **150**. The first source/drain contact **170** may be disposed on the first source/drain pattern **150**.

Although the first source/drain contact **170** is shown as not being in direct contact with the gate structure GS disposed on both sides, this is merely for convenience of explanation, and embodiments of the present disclosure are not necessarily limited thereto. For example, unlike the shown example, the first source/drain contact **170** may come into direct contact with at least one of the gate structure GS disposed on either side.

A silicide film **155** may be formed between the first source/drain contact **170** and the first source/drain pattern **150**. Although the silicide film **155** is shown as being formed

along the profile of the interface between the first source/drain pattern **150** and the first source/drain contact **170**, embodiments of the present disclosure are not necessarily limited thereto. The silicide film **155** may include, for example, a metal silicide material.

The first source/drain contact **170** may include a first portion **1701** and a second portion **170_2**. The first portion **170_1** of the first source/drain contact may be directly connected to the second portion **170_2** of the first source/drain contact.

The second portion **170_2** of the first source/drain contact is a portion on which the first via plug **175** is landed (e.g., disposed thereon). In an embodiment, the first source/drain contact **170** may be connected to a wiring line **205** through the second portion **1702** of the first source/drain contact. The first via plug **175** is not landed (e.g., disposed on) the first portion **1701** of the first source drain contact.

For example, in the cross-sectional view as in FIGS. **2** and **6**, the second portion **170_2** of the first source/drain contact may be disposed in the portion connected to (e.g., directly connected to) the first via plug **175**. The first portion **170_1** of the first source/drain contact may be disposed in a portion that is not connected to (e.g., directly connected to) the first via plug **175**.

Further, to prevent the gate contact **180** and the first source/drain contact **170** from coming into direct contact with each other, although the first portion **170_1** of the first source/drain contact is disposed and the second portion **170_2** of the first source/drain contact may not be disposed, on both sides of the gate structure GS of the portion connected to the gate contact **180**, embodiments of the present disclosure are not necessarily limited thereto. For example, in the cross-sectional view as in FIG. **2**, the first portion **170_1** of the first source/drain contact is disposed, and the second portion **170_2** of the first source/drain contact may not be disposed on both sides of the gate structure GS connected to the gate contact **180**.

The upper surface of the second portion **170_2** of the first source/drain contact is higher (e.g., farther from the substrate **100** in the third direction Z) than the upper surface of the first portion **170_1**, of the first source/drain contact. In FIG. **6**, the upper surface of the second portion **170_2** of the first source/drain contact is higher than the upper surface of the first portion **170_1** of the first source/drain contact based on the upper surface of the field insulating film **105**. For example, an upper surface **170**US of the first source/drain contact may be an upper surface of the second portion **170_2** of the first source/drain contact.

In FIG. **6**, although the first source/drain contact **170** is shown to have an L-shape, embodiments of the present disclosure are not necessarily limited thereto. For example, unlike the shown example, in an embodiment the first source/drain contact **170** may have a T-shape rotated by 180 degrees. In this embodiment, the first portion **170_1** of the first source/drain contact may be disposed on either side of the second portion **170_2** of the first source/drain contact.

In an embodiment, a width of the first source/drain contact **170** may increase as the distance away from the substrate **100** increases. For example, the width of the first source/drain contact **170** in the first direction X may increase as the distance from the substrate **100** increases.

For example, a height H**12** from the upper surface AP**1**_US of the first active pattern to the upper surface **120**US of the gate electrode may be greater than a height fill from the upper surface AP**1**_US of the first active pattern to the upper surface of the first portion of the first source/drain contact **170**. In the cross-sectional view, when the upper surface **120**US of the gate electrode has a concave shape, the height of the upper surface **120**US of the gate electrode may be a portion closest to the upper surface AP**1**_US of the first active pattern.

For example, the upper surface **170**US of the first source/drain contact may protrude upward (e.g., in the third direction Z) from the upper surface GS_US of the gate structure. The upper surface GS_US of the gate structure may be lower than the upper surface **170**US of the first source/drain contact based on the upper surface AP**1**_US of the first active pattern.

In an embodiment, the first source/drain contact **170** may include a source/drain barrier film **170***a* and a source/drain filling film **170***b* on the source/drain barrier film **170***a*. The source drain barrier film **170***a* may extend along the side walls and bottom surface of the source/drain filling film **170***b*.

Although a bottom surface **170**BS of the first source/drain contact is shown to have a wavy shape, embodiments of the present disclosure are not necessarily limited thereto. For example, in an embodiment, the bottom surface **170**BS of the first source/drain contact may have a flat shape, unlike the shown example.

In an embodiment, the source/drain barrier film **170***a* may include, for example, at least one of tantalum (Ta), tantalum nitride (TaN), titanium (Ti), titanium nitride (TiN), titanium silicon nitride (TiSiN), ruthenium (Ru), cobalt (Co), nickel (Ni), nickel boron (NiB), tungsten (W), tungsten nitride (WN), tungsten carbonitride (WCN), zirconium (Zr), zirconium nitride (ZrN), vanadium (V), vanadium nitride (VN), niobium (Nb), niobium nitride (NbN), platinum (Pt), iridium (Ir), rhodium (Rh), and two-dimensional (2D) material. In the semiconductor device according to some embodiments, the 2D material may be a metallic material and/or a semiconductor material. The 2D material may include a 2D allotrope or a 2D compound, and may include, but is not necessarily limited to, at least one of graphene, molybdenum disulfide (MoS_2), molybdenum diselenide ($MoSe_2$), tungsten diselenide (WSe_2), and tungsten disulfide (WS_2). For example, since the above-mentioned 2D materials are only listed by way of example, the 2D materials that may be included in the semiconductor device of the present disclosure are not necessarily limited by the above-mentioned materials.

In an embodiment, the source/drain filling film **170***b* may include, for example, at least one of aluminum (Al), tungsten (W), cobalt (Co), ruthenium (Ru), silver (Ag), gold (Au), manganese (Mn), and molybdenum (Mo).

The first conductive pad **160** may be disposed on the first source/drain contact **170**. The first conductive pad **160** may come into direct contact with the upper surface **170**US of the first source/drain contact.

The first conductive pad **160** may be disposed at a position at which the first source/drain contact **170** and the wiring line **205** are connected. For example, the first conductive pad **160** may be disposed at a position at which the first via plug **175** is formed. In an embodiment, the first conductive pad **160** may be disposed directly on an upper surface of the second portion **170_2** of the first source/drain contact and portions of lateral side walls of the first via plug **175**.

The first conductive pad **160** includes an upper surface **160**US and a lower surface **160**BS opposite to each other in the third direction Z. The lower surface **160**BS of the first conductive pad may directly contact the upper surface **170**US of the first source/drain contact.

The first conductive pad **160** may include a first pad through hole **160**H that penetrates the first conductive pad

160 in the third direction Z. The first pad through hole 160H may be defined by side walls 160H_SW that connect the upper surface 160US of the first conductive pad and the lower surface 160BS of the first conductive pad. For example, the width of the first pad through hole 160H may decrease as the distance from the upper surface 170US of the first source/drain contact increases.

The second conductive pad 165 may be disposed on the gate structure GS. The second conductive pad 165 may be in direct contact with the upper surface GS_US of the gate structure. For example, in an embodiment, an entirety of the lower surface of the second conductive pad 165 is disposed on the upper surface GS_US of the gate structure.

The second conductive pad 165 may be disposed at a position at which the gate electrode 120 and the wiring line 205 are connected. For example, the second conductive pad 165 may be disposed at a position at which the gate contact 180 is formed and may directly contact portions of lateral side walls of the gate contact 180.

The second conductive pad 165 includes an upper surface 165US and a lower surface 165BS opposite to each other in the third direction 2. The lower surface 165BS of the second conductive pad may directly contact with the upper surface GS_US of the gate structure. For example, the lower surface 165BS of the second conductive pad may directly contact the upper surface of the gate capping pattern 145. For example, the upper surface 165US of the second conductive pad may have a surface extending in a plane.

The lower surface 165BS of the second conductive pad may be disposed on the upper surface GS_US of the gate structure. In an embodiment, the lower surface 165BS of the second conductive pad may be higher than the upper surface GS_US of the gate structure based on the upper surface AP1_US of the first active pattern.

The second conductive pad 165 may include a second pad through hole 165H that penetrates the second conductive pad 165 in the third direction Z. The second pad through hole 165H may be defined by side walls 165H_SW that connect the upper surface 165US of the second conductive pad and the lower surface 165BS of the second conductive pad. For example, the width of the second pad through hole 165H may decrease as a distance from the upper surface 120US of the gate electrode increases.

For example, inside the gate capping pattern 145, the width of the gate contact 180 may decrease as a distance from the upper surface 120US of the gate electrode increases. However, embodiments of the present disclosure are not necessarily limited thereto. For example, unlike the shown example, in an embodiment the width of the gate contact 180 may be kept constant as a distance from the upper surface 120US of the gate electrode increases. In an embodiment, the width of the gate contact 180 may increase as a distance from the upper surface 120US of the gate electrode increases.

A thickness t1 of the first conductive pad 160 may be different from a thickness t2 of the second conductive pad 165. In the semiconductor device according to some embodiments, the thickness t2 of the second conductive pad 165 (e.g., length in the third direction Z) is greater than the thickness t1 of the first conductive pad 160 (e.g., length in the third direction Z). However, embodiments of the present disclosure are not necessarily limited thereto.

Based on the upper surface GS_US of the gate structure, the upper surface 170US of the first source/drain contact is higher than the upper surface 165US of the second conductive pad. In an embodiment, a height t2 from the upper surface GS_US of the gate structure to the upper surface 165US of the second conductive pad is less than a height H2 from the upper surface GS_US of the gate structure to the upper surface 170US of the first source/drain contact. In an embodiment, the height from the upper surface GS_US of the gate structure to the upper surface 165US of the second conductive pad is equal to the thickness of the second conductive pad 165.

Based on the upper surface GS_US of the gate structure the upper surface 160US of the first conductive pad is higher than the upper surface 165H of the second conductive pad.

The first conductive pad 160 and the second conductive pad 165 may each include a conductive material. For example, the first conductive pad 160 and the second conductive pad 165 may each include, but are not necessarily limited to, at least one of metal, metal alloy, metal nitride, metal carbide, metal carbonitride, metal oxide and a semiconductor material doped with impurities.

The first via plug 175 may be disposed on the first source/drain contact 170. The first via plug 175 is connected to the first source/drain contact 170. For example, the first via plug 175 directly contacts the upper surface 170US of the first source/drain contact.

The first via plug 175 penetrates the first conductive pad 160. The first via plug 175 passes through the first pad through hole 160H and is directly connected to the first source/drain contact 170. The first via plug 175 directly contacts the side walls 160H_SW of the first pad through hole 160H.

In an embodiment, the second via plug 275 may be disposed directly on the second source/drain contact 270. The second via plug 275 may be directly connected to the second source/drain contact 270.

Since the contents relating to the second via plug 275 are substantially the same as those relating to the first via plug 175, the following description will be provided, using the first via plug 175 on the first source/drain contact 170 and a repeated description may be omitted for convenience of explanation.

The first via plug 175 protrudes from the upper surface 160US of the first conductive pad (e.g., in the third direction Z). A portion of the first via plug 175 protrudes upward from the upper surface 160US of the first conductive pad. The remaining portion of the first via plug 175 is disposed in the first conductive pad 160 (e.g., is surrounded by the first conductive pad 160).

In at least a portion of the first via plug 175, the width of the first via plug 175 may decrease as a distance from the upper surface 170US of the first source/drain contact increases. For example, the width of the first via plug 175 may decrease as a distance from the upper surface 160US of the first conductive pad increases. A width W11 of the upper surface 75US of the first via plug is less than a width W12 of a lower surface of the first via plug 175 disposed on the upper surface 160US of the first conductive pad. In the cross-sectional view, the side wall of the first via plug 175 protruding from the upper surface 160US of the first conductive pad may have a linear shape. However, embodiments of the present disclosure are not necessarily limited thereto.

The gate contact 180 may be disposed on the gate electrode 120 (e.g., disposed directly thereon in the third direction Z). The gate contact 180 is directly connected to the gate electrode 120. The gate contact 180 comes into direct contact with the upper surface 120US of the gate electrode.

The gate contact 180 may be disposed at a position where it overlaps the gate structure GS (e.g., in the third direction

Z). In the semiconductor device according to some embodiments, at least a portion of the gate contact **180** may be disposed at a position where it overlaps at least one of the first active region RX**1** and the second active region RX**2**. For example, from the viewpoint of the plan view the gate contact **180** may be disposed at a position where it generally overlaps the first active region RX**1** or the second active region RX**2**.

The gate contact **180** penetrates the second conductive pad **165** and the gate capping pattern **145**. The gate contact **180** passes through the second pad through hole **465**H and is directly connected to the gate electrode **120**. The gate contact **180** comes into direct contact with the side walls **165**H_SW of the second pad through hole **165**H.

The gate contact **180** protrudes from the upper surface **165**US of the second conductive pad (e.g., in the third direction Z). A portion of the gate contact **180** protrudes upward from the upper surface **165**US of the second conductive pad. The remaining portion of the gate contact **180** is disposed inside the second conductive pad **165** and the gate structure GS (e.g., surrounded thereby).

In at least a portion of the gate contact **180**, the width of the gate contact **180** may decrease as a distance from the upper surface **120**US of the gate electrode increases. For example, in an embodiment the width of the gate contact **180** may decrease as a distance from the upper surface **165**US of the second conductive pad increases. A width W**21** of the upper surface **180**US of the gate contact is less than a width W**22** of the lower surface of the gate contact **180** disposed on the upper surface **165**US of the second conductive pad. In the cross-sectional view, the side walls of the gate contact **180** protruding from the upper surface **165**US of the second conductive pad may have a linear shape. However, embodiments of the present disclosure are not necessarily limited thereto.

In an embodiment, based on the upper surface GS_US of the gate structure, the upper surface **175**US of the first via plug may be disposed on the same plane as the upper surface **180**US of the gate contact. A height H**31** from the upper surface GS_US of the gate structure to the upper surface **175**US of the first via plug may be equal to a height H**32** from the upper surface GS_US of the gate structure to the upper surface **180**US of the gate contact.

In an embodiment, the first via plug **175** and the gate contact **180** may each have a single material film structure. The first via plug **175** and the gate contact **180** each may not have a multi-layer structure including different materials from each other. The first via plug **175** and the gate contact **180** may each be formed of one conductive material. In an embodiment, the first via plug **175** and the gate contact **180** may include impurities that unintentionally flow in during the process of forming the first via plug **175** and the gate contact **180**.

In an embodiment, the first via plug **175** and the gate contact **180** may each be formed by a single grain. However, embodiments of the present disclosure are not necessarily limited thereto. For example, in an embodiment, the first via plug **175** and the gate contact **180** may include a plurality of crystal grains separated by grain boundary.

The first via plug **175** and the gate contact **180** may include a metal that can be selectively grown on the conductive material. In an embodiment, the first via plug **175** and the gate contact **180** may include, for example, but are not necessarily limited to, one of titanium (Ti), tungsten (W), molybdenum (Mo), ruthenium (Ru) and cobalt (Co). For example, the first via plug **175** and the gate contact **180** may include the same material.

The first interlayer insulating film **191** may be disposed on the field insulating film **105**. The first conductive pad **160**, the second conductive pad **165**, the first source/drain contact **170**, the first via plug **175**, and the gate contact **180** may be disposed inside the first interlayer insulating film **191**. The first interlayer insulating film **191** does not cover the upper surface **175**US of the first via plug and the upper surface **180**US of the gate contact.

The second interlayer insulating film **192** may be disposed on the first interlayer insulating film **191** (e.g., disposed directly thereon in the third direction Z).

In an embodiment, the first interlayer insulating film **191** and the second interlayer insulating film **192** may each include, for example, at least one of silicon oxide, silicon nitride, silicon oxynitride and a low dielectric constant material. The low dielectric constant material may include, for example, but is not necessarily limited to, Fluorinated TetraEthylOrthoSilicate (FTEOS), Hydrogen SilsesQuioxane (HSQ), Bis-benzoCycloButene (BCB), TetraMethylOrthoSilicate (TMOS), OctaMethyleyCloTetraSiloxane (OMCTS), HexaMethylDiSiloxane (HMDS), TriMethylSil Borate (TMSB), DiAcetoxyDitertiaryButoSiloxane (DADBS), TriMethylSilil Phosphate (TMSP), PolyTetraFluoroEthylene (PTFE), TOSZ (Toner SilaZen), FSG (Fluoride Silicate Glass), polyimide nanofoams such as polypropylene oxide, CDO (Carbon Doped silicon Oxide), CSG (Organo Silicate Glass), SiLK Amorphous Fluorinated Carbon, silica aerogels, silica xerogels, mesoporous silica or combinations thereof.

The wiring line **205** may be disposed inside the second interlayer insulating film **192**. The wiring line **205** is directly connected to the first via plug **175**. The wiring line **205** may come into direct contact with the first via plug **175**. The wiring line **205** is directly connected to the gate contact **180**. The wiring line **205** may be in direct contact with the gate contact **180**. In an embodiment, the second via plug **275** is directly connected to the wiring line **205**.

The wiring line **205** may include a wiring, barrier film **205***a* and a wiring filling film **205***b*. The wiring barrier film **205***a* may extend along the upper surface of the second interlayer insulating film **192**, the upper surface **175**US of the first via plug, and the upper surface **180**US of the gate contact. The wiring filling film **205***b* may be disposed on the wiring barrier film **205***a* (e.g., disposed directly thereon).

In an embodiment, the wiring barrier film **205***a* may include, for example, at least, one of tantalum (Ta), tantalum nitride (TaN), titanium (Ti), titanium nitride (TiN), titanium silicon nitride (TiSiN), ruthenium (Rh), cobalt (Co), nickel (Ni), nickel boron (NiB), tungsten (W), tungsten nitride (WN), tungsten carbonitride (WCN), zirconium (Zr), zirconium nitride (ZrN), vanadium (V), vanadium nitride (VN), niobium (Nb), niobium nitride (NbN), platinum (Pt), iridium (Ir), rhodium (Rh), and a two-dimensional (2D) material. The wiring filling, film **205***b* may include, for example, at least one of aluminum (Al), copper (Cu), tungsten (W), cobalt (Co), ruthenium (Ru), silver (Ag), gold (Au), manganese (Mn), and molybdenum (Mo). However, embodiments of the present disclosure are not necessarily limited thereto.

FIGS. **7** to **10** are diagrams for explaining a semiconductor device according to some embodiments. For convenience of explanation, points different from those described using FIGS. **1** to **6** will be mainly described and a description of similar or identical elements may be omitted.

For reference, FIGS. **7** to **10** are enlarged views of a portion P of FIG. **2**. In some embodiments, the contents

described in FIGS. **7** to **10** may also be applied between the gate contact **180** and the second conductive pad **165**.

Referring to FIG. **7**, in the semiconductor device according to some embodiments, the side walls of the first via plug **175** protruding from the upper surface **160**US of the first conductive pad may have a curved shape.

For example, a rate at which the width of the first via plug **175** increases may change as a distance from the upper surface **160**US of the first conductive pad increases.

Referring to FIG. **8**, in the semiconductor device according to some embodiments, the width of the first pad through hole **160**H may be constant. In an embodiment, the side walls of the first via plug **175** protruding from the upper surface **160**US of the first conductive pad may have a linear shape that decreases as a distance from the upper surface **160**US of the first conductive pad increases.

The width of the first pad through hole **160**H may be kept constant as a distance from the upper surface **170**US of the first source/drain contact increases.

Referring to FIG. **9**, in the semiconductor device according to some embodiments, the width of the first pad through hole **160**H may increase a distance from the upper surface **120**US of the gate electrode increases.

As a distance from the upper surface **170**US of the first source/drain contact increases, the width of the first via plug **175** increases. The width of the first via plug **175** may then decrease as a distance from the upper surface **160**US of the first conductive pad increases.

Referring to FIG. **10**, in a semiconductor device according to some embodiments, the first via plug **175** may cover a portion of the upper surface **160**US of the first conductive pad.

The width of the first via plug **175** may vary discontinuously based on the upper surface **160**US of the first conductive pad. It is assumed that the first via plug **175** includes a first portion disposed in the first conductive pad **160**, and a second portion protruding from the upper surface **160**US of the first conductive pad. The width of the first portion of the first via plug **175** on the upper surface **170**US of the first source/drain contact is less than the width of the first portion of the first via plug **175** on the upper surface **160**US of the first conductive pad.

FIGS. **11** and **12** are diagrams for explaining a semiconductor device according to some embodiments, respectively. For convenience of explanation, points different from those described using FIGS. **1** to **6** will be mainly described and a repeated description of similar or identical elements may be omitted.

For reference, FIGS. **11** and **12** are enlarged views of a portion Q of FIG. **2**, respectively.

Referring to FIG. **11**, the semiconductor device according to some embodiments may include an insertion air gap **180**_AG disposed at the bottom of the gate contact **180**.

The gate contact **180** may be disposed inside the gate contact hole formed over the first interlayer insulating film **191**, the second conductive pad **165** and the gate capping pattern **145**. The gate contact hole may expose not only the gate electrode **120** but also the gate insulating film **130** and the gate spacer **140**. However, embodiments of the present disclosure are not necessarily limited thereto. For example, unlike the shown example, the gate contact hole may not expose the gate spacer **140**.

Although it will be described in a manufacturing method, the gate contact **180** may be formed only on the conductive material through a selective growth method. For example, the gate contact **180** may not be grown on the gate insulating film **130** and the gate spacer **140** that are the insulating materials. The insertion air gap **180**_AG may be formed by such a method for forming the gate contact **180**.

Referring to FIG. **12**, in the semiconductor device according to some embodiments, the upper surface **165**US of the second conductive pad may include a curved surface.

The upper surface **165**US of the second conductive pad may include a concave curved surface, that is recessed toward the upper surface **120**US of the gate electrode.

FIGS. **13** and **14** are diagrams for explaining a semiconductor device according to some embodiments. For convenience of explanation, points different from those described using FIGS. **1** to **6** will be mainly described and a repeated description of similar or identical elements may be omitted.

For reference, FIG. **13** is an enlarged view of a portion P of FIG. **2**, and FIG. **14** is an enlarged view of a portion Q of FIG. **2**.

Referring to FIGS. **13** and **14**, in the semiconductor device according to some embodiments, the first via plug **175** may include a lower via plug **175**B and an upper via plug **175**U. The gate contact **180** may include a lower gate contact **180**B and an upper gate contact **180**U.

The upper, via plug **175**U is disposed on the lower via plug **175**B (e.g., disposed directly thereon in the third direction D**3**). The upper via plug **175**U is directly connected to the lower via plug **175**B.

The lower via plug **175**B is directly connected to and directly contacts the first source/drain contact **170**. The lower via plug **175**B is disposed in the first conductive pad **160**. For example, the lower via plug **175**B may be disposed inside the first conductive pad **160** and is surrounded by the first conductive pad **160**. The lower via plug **175**B directly contacts the side walls **160**H_SW of the first pad through hole **160**H.

The upper via plug **175**U may protrude upward from the upper surface **160**US of the first conductive pad. A portion of the first via plug **175** that protrudes from the upper surface **160**H_SW of the first conductive pad may be the upper via plug **175**U. The upper via plug **175**U may not directly contact the side walls **160**H_SW of the first pad through hole **160**H.

In an embodiment, a portion of the upper via plug **175**U may enter the first pad through hole **160**H. For example, a lowermost portion of the upper via plug **175**U may be coplanar (e.g., in the third direction Z) with a portion of the lower via plug **175**B and may be disposed at a central portion of the first pad through hole **160**H so that the co-planar portion of the lower via plug **175**B is disposed between the lowermost portion of the upper via plug **175**U and side walls **160**H_SW of the first pad through hole **160**H (e.g., in the first direction X). However, embodiments of the present disclosure are not necessarily limited thereto. For example, unlike the shown example, the upper via plug **175**U may not enter the first pad through hole **160**H.

In an embodiment, the width of the upper via plug **175**U may decrease as a distance from the upper surface **170**US of the first source/drain contact increases. For example, the width of the upper via plug **175**U may decrease as a distance from the tipper surface **160**US of the first conductive pad increases. The upper surface of the upper via plug **175**U is the upper surface **175**US of the first via plug. The width of the upper surface of the upper via plug **175**U is less than the width of the first via plug **175** on the upper surface **160**US of the first conductive pad.

The upper gate contact **180**U is disposed on the lower gate contact **180**B (e.g., disposed directly thereon in the third direction Z). The upper gate contact **180**U is directly connected to the lower gate contact **180**B.

The lower gate contact **180**B is directly connected to and directly contacts the gate electrode **120**. The lower gate contact **180**B is disposed inside the second conductive pad **165** and the gate capping pattern **145**. The lower gate contact **180**B directly contacts the side walls **165**H_SW of the second pad through hole **165**H.

The upper gate contact **180**U may protrude upward from the upper surface **165**US of the second conductive pad (e.g., in the third direction Z). A portion of the gate contact **180** that protrudes from the upper surface **165**US of the second conductive pad may be the upper gate contact **180**U. Me upper, gate contact **180**U may not directly contact the side walls **165**H_SW of the second pad through hole **165**H.

A portion of the upper gate contact **180**U may be recessed into the second pad through hole **165**H. For example, a lowermost portion of the upper gate contact **180**U may be coplanar (e.g., in the third direction Z) with a portion of the lower gate contact **180**B and may be disposed at a central portion of the second pad through hole **165**H so that the co-planar portion of the lower gate contact **180**B is disposed between the lowermost portion of the upper gate contact **180**U and side walls **165**H_SW of the second pad through hole **165**H (e.g., in the first direction X). However, embodiments of the present disclosure are not necessarily limited thereto. For example, unlike the shown example, the upper gate contact **180**U may not be recessed into the second pad through hole **165**H.

The width of the upper gate contact **180**U may decrease as a distance from the upper surface **120**US of the gate electrode increases. For example, the width of the upper gate contact **180**U may decrease as a distance from the upper surface **165**US of the second conductive pad increases. The upper surface of the upper gate contact **180**U is the upper surface **180**US of the gate contact. The width of the upper surface of the upper gate contact **180**U is less than the width of the gate contact **180** on the upper surface **165**US of the second conductive pad.

In an embodiment, the lower via plug **175**B and the lower gate contact **180**B may each have a single material film structure. The lower via plug **175**U and the lower gate contact **180**U may include the same material.

In an embodiment, the upper via plug **175**U and the upper gate contact **180**U may each have a single material film structure. The upper via plug **175**U and the upper gate contact **180**U may include the same material.

In an embodiment, the lower via plug **175**B, the lower gate contact **180**B, the upper via plug **175**U and the upper gate contact **180**U may include a metal that can be selectively grown on the conductive material. The lower via plug **175**B and the lower gate contact **180**B may include, for example, but are not necessarily limited to, one of titanium (Ti), tungsten (W), molybdenum (Mo), ruthenium (Ru), and cobalt (Co). The upper via ping **175**U and the upper gate contact **180**U may include, for example, but are not necessarily limited to, one of titanium (Ti), tungsten (W), molybdenum (Mu), ruthenium (Ru) and cobalt (Co).

Hereinafter, the first via plug **175** will be described as for example. In some embodiments, the description may also be applied to the gate contact **180**.

In an embodiment, the lower via plug **175**B may include the same material as the upper via plug **175**U. The lower via plug **175**B and the upper via plug **175**U may be formed by a single grain. However, a priority growth direction of the lower via plug **175**B may be different from a priority growth direction of the upper via plug **175**U. The lower via plug **175**B and the upper via plug **175**U may be distinguished through a difference in the growth direction between the lower via plug **175**B and the upper via plug **175**U.

In another example, the lower via plug **175**B may include the same material as the upper via plug **175**U. One of the lower via plug **175**B and the upper via plug **175**U may be formed by a single grain. The other of the lower via plug **175**B and the upper via plug **175**U may be formed by a plurality of crystal grains. The lower via plug **175**B and the upper via plug **175**U may be distinguished through a difference in crystal grains between the lower via plug **175**B and the upper via plug **175**U.

In still another example, the lower via plug **175**B includes a material different from the upper via plug **175**U. The lower via plug **175**B and the upper via plug **175**U may be distinguished through the material difference.

FIGS. **15** and **16** are diagrams for explaining a semiconductor device according to some embodiments, respectively. For convenience of explanation, points different from those described using FIGS. **1** to **6** will be mainly described and a repeated description of similar or identical elements may be omitted.

Referring to FIG. **15**, in a semiconductor device according to some embodiments, the upper surface **170**US of the first source/drain contact may be disposed on the same plane as the upper surface **165**US of the second conductive pad.

Based on the upper surface GS_US of the gate structure, the upper surface **170**US of the first source/drain contact may be disposed at the same height level as that of the upper surface **165**US of the second conductive pad.

A height t**2** from the upper surface GS_US of the gate structure to the upper surface **165**US of the second conductive pad may be the same as (e.g., equal to) a height H**2** from the upper surface GS_US of the gate structure to the upper surface **170**US of the first source/drain contact.

Referring to FIG. **16**, in the semiconductor device according to some embodiments, the upper surface GS_US of the gate structure may be disposed on the same plane as the upper surface **170**US of the first source/drain contact. For example, the upper surface GS_US of the gate structure may be coplanar with the upper surface **170**US of the first source/drain contact in the third direction Z.

Based on the upper surface AP**1**_US of the first active pattern, the upper surface GS_US of the gate structure may be disposed at the same height level as that of the upper surface **170**US of the first source/drain contact.

For example, in contrast to an embodiment shown in FIG. **2**, the thickness t**2** of the second conductive pad **165** may be equal to the thickness t**1** of the first conductive pad **160**.

FIGS. **17** to **19** are diagrams for explaining a semiconductor device according to some embodiments. For convenience of explanation, points different from those described using FIGS. **1** to **6** will be mainly described and a repeated description of similar or identical elements may be omitted.

Referring to FIG. **17**, in the semiconductor device according to some embodiments, the height of the first source/drain contact **170** may be constant based on the upper surface AP**1**_US of the first active pattern, irrespective of landing of the first via plug **175**.

In an embodiment in which the first source/drain contact **170** includes a first portion (**170_1** of FIG. **6**) on which the first via plug **175** is not landed and a second portion (**170_2** of FIG. **6**) on which the first via plug **175** is landed, the height of the upper surface of the second portion of the source/drain contact **170** may be the same as the height of the upper surface of the first portion of the first source/drain contact **170**.

Referring to FIG. **18**, in the semiconductor device according to some embodiments, the upper surface GS_US of the gate structure includes the upper surface of the gate electrode **120**.

The gate structure GS may not include the gate capping pattern (**145** of FIG. **2**). The second conductive pad **165** may be in direct contact with at least one of the gate insulating film **130** and the gate electrode **120**.

Referring to FIG. **19**, in the semiconductor device according to some embodiments, the first source/drain contact **170** does not have a multi-film structure including different materials from each other.

The first source/drain contact **170** may have, for example, a single material film structure.

FIGS. **20** to **22** are diagrams for explaining a semiconductor device according to some embodiments. For convenience of explanation, points different from those described using FIGS. **1** to **6** will be mainly described and a repeated description of similar or identical elements may be omitted.

Referring to FIG. **20**, the semiconductor device according to some embodiments may further include a protruding structure PRT disposed along the boundary of the first active region RX**1**.

The protruding structure PRT may be disposed at the boundary of the first active region RX**1** extending along the first direction X. A first side wall of the protruding structure PRT may be defined by a tin trench FT, and a second side wall of the protruding structure PRT may be defined by a deep trench DT. The protruding structure PRT may extend in the first direction X.

The protruding structure PRT is covered with a field insulating film **105**. The protruding structure PRT may include the same semiconductor material as the first active pattern AP**1**.

Although the protruding structure PRT is shown as being disposed along the two boundaries of the first active region RX**1** extending along the first direction X, the embodiments of the present disclosure are not necessarily limited thereto. For example, unlike the shown example, the protruding structure PRT may be disposed along only one of the two boundaries of the first active region RX**1** extending along the first direction X.

In an embodiment, the protruding structure PRT may also be disposed at the edge of the second active region RX**2**, such as at least one of the two boundaries of the second active region RX**2** extending along the first direction X.

Referring to FIG. **21**, the semiconductor device according to some embodiments may include a dummy protruding pattern DFP formed in the field region FX.

A deep trench (DT of FIG. **2**) may not be formed M the field region FX. The upper surface of the dummy protrusion pattern DFP is covered with the field insulating film **105**.

Referring to FIG. **22**, in the semiconductor device according to some embodiments, the substrate **100** may include a base substrate **101** and a buried insulating film **102** on the base substrate **101**.

In an embodiment, the base substrate **101** may include, but is not necessarily limited to, a semiconductor material. The buried insulating film **102** may be formed generally along the upper surface of the base substrate **101**. The buried insulating film **102** may include an insulating material.

FIGS. **23** to **26** are diagrams for explaining the semiconductor device according to some embodiments. FIG. **23** is an layout diagram for explaining the semiconductor device according to some embodiments. FIGS. **24** and **25** are cross-sectional views taken along A-A of FIG. **23**, respectively. FIG. **26** is a cross-sectional view taken along B-B of FIG. **23**. For convenience of explanation, points different from those described using FIGS. **1** to **6** will be mainly described and a repeated description of similar or identical elements may be omitted.

Referring to FIGS. **23** to **26**, in the semiconductor device according to some embodiments, the first active pattern AP**1** may include a lower pattern BP**1** and a sheet pattern UP**1**.

In an embodiment, the second active pattern AP**2** may include a lower pattern and a sheet pattern.

The lower pattern BP**1** may extend along the first direction X. The sheet pattern UP**1** may be disposed on the lower pattern BP**1** to be spaced apart from the lower pattern BP**1**.

The sheet pattern UP**1** may include a plurality of sheet patterns stacked in the third direction Z. Although the three sheet patterns UP**1** are shown, this is merely for convenience of explanation, and embodiments of the present disclosure are not necessarily limited thereto.

The sheet pattern UP**1** may be connected to the first source/drain pattern **150**. The sheet pattern UP**1** may be a channel pattern used as a channel region of a transistor. For example, the sheet pattern UP**1** may be a nanosheet or a nanowire. The upper surface AP**1**_US of the first active pattern may be the upper surface of the sheet pattern UP**1** disposed at the uppermost part among the sheet patterns UP**1**.

In an embodiment, the lower pattern BP**1** may include, for example silicon or germanium, which is an elemental semiconductor material. Alternatively, the lower pattern BP**1** may include a compound semiconductor, for example, an IV-IV group compound semiconductor or a III-V group compound semiconductor.

The sheet pattern UP**1** may include for example, silicon or germanium, which is an elemental semiconductor material. Alternatively the sheet pattern UP**1** may include a compound semiconductor, and may include, for example, an IV-IV group compound semiconductor or a III-V group compound semiconductor.

The gate insulating film **130** may extend along the upper surface of the lower pattern BP**1** and the upper surface of the field insulating film **105**. The gate insulating film **130** may wrap around the sheet pattern UP**1**.

The gate electrode **120** is disposed on the lower pattern BP**1**. The gate electrode **120** intersects the lower pattern BP**1**. The gate electrode **120** may wrap around the sheet pattern UP**1**. The gate electrode **120** may be disposed between the lower pattern BP**1** and the sheet pattern UP**1**, and between the adjacent sheet patterns UP**1**.

In FIG. **24**, the gate spacer **140** may include an outer spacer **141** and an inner spacer **142**. The inner spacer **142** may be disposed between the lower pattern BP**1** and the sheet pattern UP**1**, and between the adjacent sheet patterns UP**1**.

In FIG. **25**, the gate spacer **140** may include only the outer spacer **141**. An inner spacer **142** may not be disposed between the lower pattern BP**1** and the sheet pattern UP**1**, and between the adjacent sheet patterns UP**1**.

FIGS. **27** and **28** are layout diagrams for explaining a semiconductor device according to some embodiments, respectively. For convenience of explanation, points different from those described using FIGS. **1** to **6** will be mainly described and a repeated description of similar or identical elements may be omitted.

Referring to FIG. **27**, in the semiconductor device according to some embodiments, at least one of the gate contacts **180** may be disposed over the active regions RX**1** and RX**2** and the field region FX from the viewpoint of the plan view.

For example, a portion of the gate contact **180** may be disposed at a position at which it overlaps the first active region RX**1** and another portion of the gate contact **180** may be disposed at a position at which it overlaps the field region FX. In an embodiment, a portion of the gate contact **180** may be disposed at a position at which it overlaps the second active region RX**2** and another portion of the gate contact **180** may be disposed at a position at which it overlaps the field region F.

Referring to FIG. **28**, in the semiconductor device according to some embodiments, at least one of the gate contacts **180** may be disposed generally in the field region FX from the viewpoint of the plan view.

At least one of the gate contacts **180** may be disposed at a position at which it generally overlaps the field region FX.

In FIGS. **27** and **28**, although at least the other of the gate contacts **180** is shown to be generally disposed on the second active region RX**2**, embodiments of the present disclosure are not necessarily limited thereto.

In FIGS. **1**, **27** and **28**, the cross section of each first source/drain contact **170** (a diagram taken in the second direction Y) and the cross section of the second source/drain contact **270** may have an "L" shape or may have a shape rotated by 180 degrees, depending on the position of the gate contact **180**.

Alternatively, regardless of the position of the gate contact **180**, each of the first source/drain contact **170** and the second source/drain contact **270** may not include the recessed portion as in FIG. **6**.

FIGS. **29** to **39** are intermediate stage diagrams for explaining a method for manufacturing a semiconductor device according to some embodiments. For reference, FIGS. **29** to **39** may be cross-sectional views taken along A-A of FIG. **1**. The following manufacturing method will be described from the viewpoint of a cross-sectional view.

Referring to FIG. **29**, a gate structure GS and a first source/drain pattern **150** may be formed on the first active pattern AP**1**.

A source/drain etching stop film **156** is formed on the first source/drain pattern **150**. Subsequently, the first portion **191**A of the first interlayer insulating film is formed on the source/drain etching stop film **156**. The upper surface of the first portion **191**A of the first interlayer insulating film exposes the upper surface of the gate structure GS.

Referring to FIG. **30**, the second conductive pad **165** may be formed on the upper surface GS_US of the gate structure. For example, in an embodiment, an entirety of the lower surface of the second conductive pad **165** is disposed on the upper surface GS_US of the gate structure.

The second conductive pad **165** may be in direct contact with the upper surface GS_US of the gate structure.

Referring to FIG. **31**, a second portion **191**B of the first interlayer insulating film may be formed on a first portion **191**A of the first interlayer insulating film.

The second portion **191**B of the first interlayer insulating film may cover the upper surface of the gate structure GS_US and the upper surface of the second conductive pad **165**.

Referring to FIG. **32**, the first source/drain contact **170** is formed on the first source/drain pattern **150**.

For example, a source/drain contact hole that exposes the first source/drain pattern **150** is formed inside the first portion **191**A of the first interlayer insulating film and the second portion **191**B of the first interlayer insulating film.

A pre source/drain contact may be formed inside the source/drain contact hole and on the upper surface of the second portion **191**B of the first interlayer insulating film. The pre source/drain contact on the upper surface of the second portion **191**B of the first interlayer insulating film may be removed through the flattening process. In an embodiment, the flattening process may be, for example, but is not necessarily limited to, a chemical mechanical polishing (CMP) process. Accordingly, the first source/drain contact **170** may be formed inside the source/drain contact hole. Subsequently, a portion of the first source/drain contact **170** of the portion that is not connected to the wiring line (**205** of FIG. **2**) may be removed.

Subsequently, a third portion **191**C of the first interlayer insulating film may be formed in the source/drain contact hole that remains after the first source/drain contact **170** is formed.

An upper surface of the third portion **191**C of the first interlayer insulating film may be disposed on the same plane as the upper surface of the first source/drain contact **170**. For example, the upper surface of the third portion **191**C of the first interlayer insulating film may be co-planar with the upper surface of the first source/drain contact **170** in the third direction Z.

However, embodiments of the present disclosure are not necessarily limited thereto. For example, in an embodiment, unlike the shown example, the upper surface of the second conductive pad **165** may be exposed, while the flattening process of forming the first source/drain contact **170** is formed.

Referring to FIG. **33**, the first conductive pad **160** may be formed on the first source/drain contact **170**.

The first conductive pad **160** may be in direct contact with the first source/drain contact **170**.

Referring to FIG. **34**, a fourth portion **191**D of the first interlayer insulating film is formed on the second portion **191**B of the first interlayer insulating film, the third portion **191**C of the first interlayer insulating film, and the first conductive pad **160**.

The fourth portion **191**D of the first interlayer insulating film covers the upper surface of the first conductive pad **160**.

The first interlayer insulating film **191** may include the first portion **191**A of the first interlayer insulating film, the second portion **191**B of the first interlayer insulating film, the third portion **191**C of the first interlayer insulating film, and the fourth portion **191**D of the first interlayer insulating film.

Referring to FIG. **35**, a pre via plug hole **175**PH and a pre gate contact hole **180**PH are formed inside the first interlayer insulating film **191**.

The pre via plug hole **175**PH exposes the first conductive pad **160**. The pre gate contact hole **180**PH exposes the second conductive pad **165**.

Referring to FIG. **36**, the first interlayer insulating film **191** is subjected to a suppressed treatment to form a via plug hole **175**H and a gate contact hole **180**H inside the first interlayer insulating film **191**.

The width of the lower portion of the pre via plug hole **175**PH and the width of the lower portion of the pre gate contact hole **180**PH may be widened through the suppressed treatment.

Referring to FIG. **37**, the first conductive pad **160** exposed by the via plug hole **175**H is removed, and the via plug hole **175**H extends to the upper surface of the first source/drain contact **170**. While the via plug hole **175**H is formed, the first pad through hole **160**H is formed.

The second conductive pad **165** and the gate capping pattern **145** exposed by the gate contact hole **180**H are sequentially removed, and the gate contact hole **180**H extends to the upper surface of the gate electrode **120**. While

the gate contact hole **180**H is formed, the second pad through hole **165**H is formed.

The via plug hole **175**H exposes the upper surface of the first source/drain contact **170**. The gate contact hole **180**H exposes the upper surface of the gate electrode **120**.

Referring to FIG. **38**, a lower via plug **175**B is formed inside the via plug hole **17511** through the selective growth. The lower via plug **175**B grows on the exposed first source/drain contact **170** and the first conductive pad **160**.

A lower gate contact **180**B is formed inside the gate contact hole **180**H through the selective growth. The lower gate contact **180**B grows on the exposed gate electrode **120** and the second conductive pad **165**.

In an embodiment, the lower via plug **175**B and the lower gate contact **180**B are formed at the same time.

Referring to FIG. **19**, an upper via plug **175**U that fills the via plug hole **175**H is formed through the selective growth.

An upper gate contact **180**U that fills the gate contact hole **180**H is formed through the selective growth.

In an embodiment, the upper via plug **175**U and the upper gate contact **180**U are formed at the same time.

The first via plug **175** connected to the first source/drain contact **170** is formed inside the via plug hole **175**H. The gate contact **180** connected to the gate electrode **120** is formed inside the gate contact hole **180**H.

Next, referring to FIG. **2**, the wiring line **205** is formed on the first interlayer insulating film **191**.

In concluding the detailed description, those skilled in the art will appreciate that many variations and modifications may be made to the described embodiments without substantially departing from the principles of the present inventive concept. Therefore, the disclosed embodiments of the present disclosure are used in a generic and descriptive sense only and not for purposes of limitation.

What is claimed is:

1. A semiconductor device comprising:

a gate structure including a gate electrode on a substrate;

a source/drain pattern disposed on the substrate and positioned on a side surface of the gate electrode;

a source/drain contact disposed on the source/drain pattern and connected to the source/drain pattern;

a first conductive pad on the source/drain contact;

a second conductive pad on the gate structure;

a via plug penetrating the first conductive pad and connected to the source drain contact; and

a gate contact penetrating the second conductive pad and connected to the gate electrode,

wherein a portion of the via plug protrudes from an upper surface of the first conductive pad,

a portion of the gate contact protrudes from an upper surface of the second conductive pad, and

a height from an upper surface of the gate structure to an upper surface of the via plug is equal to a height from the upper surface of the gate structure to an upper surface of the gate contact.

2. The semiconductor device of claim **1**, wherein:

a width of the upper surface of the via plug is less than a width of the via plug disposed on the upper surface of the first conductive pad; and

a width of the upper surface of the gate contact is less than a width of the gate contact disposed on the upper surface of the second conductive pad.

3. The semiconductor device of claim **2**, wherein a width of the source/drain contact increases as a distance from the substrate increases.

4. The semiconductor device of claim **1**, wherein:

the first conductive pad includes a pad through hole; and

the via plug directly contacts side walls of the pad through hole.

5. The semiconductor device of claim **1**, wherein the upper surface of e gate structure is lower than the upper surface of the source/drain contact.

6. The semiconductor device of claim **5**, wherein a height from the upper surface of the gate structure to the upper surface of the second conductive pad is equal to a height from the upper surface of the gate structure to the upper surface of the source/drain contact.

7. The semiconductor device of claim **1**, wherein the upper surface of the gate structure is disposed on a same plane as the upper surface of the source drain contact.

8. The semiconductor device of claim **1**, wherein a thickness of the second conductive pad is greater than or equal to a thickness of the first conductive pad.

9. The semiconductor device of claim **1**, wherein:

the via plug includes a lower via plug and an upper via plug on the lower via plug; and

the lower via plug is directly connected to the source drain contact and disposed in the first conductive pad.

10. The semiconductor device of claim **9**, wherein the lower via plug and the upper via plug each have a single material film structure.

11. The semiconductor device of claim **1**, wherein an entirety of a lower surface of the second conductive pad is disposed on the upper surface of the gate structure.

12. The semiconductor device of claim **1**, wherein the gate contact and the via plug each have a single material structure.

13. A semiconductor device comprising:

a gate structure on a substrate, the gate structure including a gate electrode and a gate capping pattern on the gate electrode;

a source/drain pattern disposed on the substrate and positioned on a side surface of the gate electrode;

a source/drain contact disposed on the source/drain pattern and connected to the source/drain pattern;

a first conductive pad on the source/drain contact;

a second conductive pad on the gate capping pattern;

a via plug penetrating the first conductive pad and connected to the source/drain contact; and

a gate contact penetrating the second conductive pad and the gate capping pattern, and connected to the gate electrode,

wherein a width of the via plug decreases as a distance from an upper surface of the first conductive pad increases, and

a width of the gate contact decreases as a distance from an upper surface of the second conductive pad increases.

14. The semiconductor device of claim **13**, wherein:

the via plug includes a lower via plug and an upper via plug on the lower via plug; and

the lower via plug is directly connected to the source/drain contact and disposed in the first conductive pad.

15. The semiconductor device of claim **14**, wherein:

the first conductive pad includes a pad through hole; and

the lower via plug directly contacts side walls of the pad through hole.

16. The semiconductor device of claim **13**, wherein the gate contact and the via plug each have a single material film structure.

17. The semiconductor device of claim **13**, wherein a thickness of the second conductive pad is greater than or equal to a thickness of the first conductive pad.

18. A semiconductor device comprising:

a multi-channel active pattern on a substrate;

a gate structure that is disposed on the multi-channel active pattern, the gate structure includes a gate electrode and a gate capping pattern, the gate capping pattern is disposed on the gate electrode;

a source/drain pattern disposed on the substrate and positioned on a side surface of the gate electrode;

a source/drain contact disposed on the source/drain pattern and connected to the source/drain pattern;

a first conductive pad on the source/drain contact;

a second conductive pad on the gate capping pattern;

a via plug penetrating the first conductive pad and connected to the source/drain contact; and

a gate contact penetrating the second conductive pad and the gate capping pattern and connected to the gate electrode,

wherein the via plug includes a lower via plug disposed in the first conductive pad and an upper via plug on the lower via plug,

the gate contact includes a lower gate contact disposed in the second conductive pad and an upper gate contact on the lower gate contact,

a width of an upper surface of the upper via plug is less than a width of a lower surface of the via plug disposed on an upper surface of the first conductive pad, and

a width of an upper surface of the upper gate contact is less than a width of a lower surface of the gate contact disposed on an upper surface of the second conductive pad.

19. The semiconductor device of claim **18**, wherein:

the lower via plug includes a same material as the lower gate contact;

the upper via plug includes a same material as the upper gate contact; and

the lower gate contact, the upper gate contact, the lower via plug, and the upper via plug each have a single material film structure.

20. The semiconductor device of claim **18**, wherein a thickness of the second conductive pad is greater than or equal to a thickness of the first conductive pad.

* * * * *