US012403778B2

(12) **United States Patent**
Nakamura et al.

(10) **Patent No.: US 12,403,778 B2**
(45) **Date of Patent: Sep. 2, 2025**

(54) **TRACTOR AND VEHICLE EQUIPPED WITH TRACTOR**

(71) Applicant: **TOYOTA JIDOSHA KABUSHIKI KAISHA**, Toyota (JP)

(72) Inventors: **Nobuo Nakamura**, Nagoya (JP); **Hiroyuki Kobayashi**, Mitaka (JP)

(73) Assignee: **TOYOTA JIDOSHA KABUSHIKI KAISHA**, Toyota (JP)

(*) Notice: Subject to any disclaimer, the term of this patent is extended or adjusted under 35 U.S.C. 154(b) by 483 days.

(21) Appl. No.: **17/897,653**

(22) Filed: **Aug. 29, 2022**

(65) **Prior Publication Data**

US 2023/0112240 A1 Apr. 13, 2023

(30) **Foreign Application Priority Data**

Oct. 8, 2021 (JP) 2021-166467

(51) **Int. Cl.**
B60L 50/70 (2019.01)
B60W 60/00 (2020.01)
B62D 53/02 (2006.01)

(52) **U.S. Cl.**
CPC ***B60L 50/70*** (2019.02); ***B60W 60/001*** (2020.02); ***B62D 53/02*** (2013.01)

(58) **Field of Classification Search**
CPC B62D 53/02; B62D 53/04; B60L 50/70; B60L 50/71; B60L 50/72; B60L 50/75; B60K 2015/03315
See application file for complete search history.

(56) **References Cited**

U.S. PATENT DOCUMENTS

6,722,460 B2 * 4/2004 Yang B62M 7/12 180/65.245
7,252,166 B2 * 8/2007 Kubusch B60K 15/03 180/65.1
9,829,882 B2 * 11/2017 MacGregor B62D 61/00
10,538,190 B1 * 1/2020 Metellus B60F 5/02
11,597,454 B2 * 3/2023 Kaneko B60P 3/40
11,707,955 B2 * 7/2023 Smith B60D 1/62 701/28
2012/0193154 A1 * 8/2012 Wellborn B60W 10/20 180/14.2
2015/0367885 A1 * 12/2015 Bruns B62D 5/0421 280/408

(Continued)

FOREIGN PATENT DOCUMENTS

CN 113246751 A * 8/2021 ..... B60K 15/07
JP 2020-125090 A 8/2020

OTHER PUBLICATIONS

Translation of CN-113246751-A (Year: 2021).*

Primary Examiner — Katy M Ebner
(74) *Attorney, Agent, or Firm* — Dinsmore & Shohl LLP

(57) **ABSTRACT**

A tractor that includes: a driver equipped with a left and right pair of driving wheels; a vehicle main body provided between the left and right pair of driving wheels; a periphery information detection sensor provided at the vehicle main body and detecting periphery information; a controller provided in the vehicle main body and controlling autonomous traveling by the driver in accordance with the periphery information detected by the periphery information detection sensor; and a first coupler provided at the vehicle main body and configured to be coupled to a trailer.

8 Claims, 7 Drawing Sheets

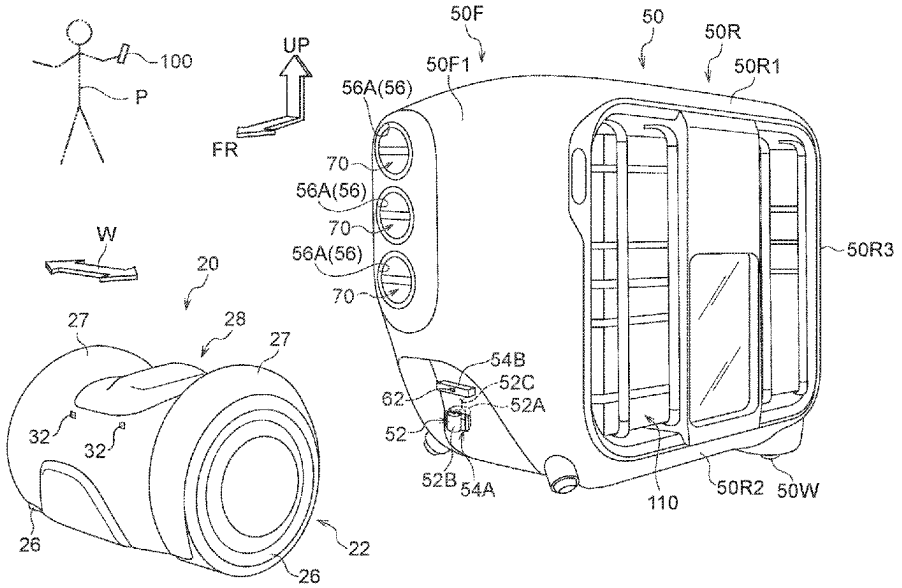

(56) **References Cited**

U.S. PATENT DOCUMENTS

2019/0033856	A1*	1/2019	Ferguson	G06K 19/0723
2019/0210479	A1*	7/2019	Bachmann	B60L 15/38
2019/0232849	A1*	8/2019	Kaneko	B60P 1/003
2019/0315236	A1*	10/2019	Mere	H02J 7/342
2019/0318306	A1*	10/2019	Mere	G06V 20/56
2022/0118977	A1	4/2022	Shimbo et al.	
2022/0402354	A1*	12/2022	Wang	H01M 50/249
2022/0410701	A1*	12/2022	Mei	B60K 15/07
2023/0115169	A1*	4/2023	Mei	B60K 15/063 280/830
2024/0149961	A1*	5/2024	Stout	B60R 1/26
2024/0278607	A1*	8/2024	Rayner	B60D 1/665
2024/0286647	A1*	8/2024	Nakamura	B60L 50/60
2024/0359554	A1*	10/2024	Hornback	B60K 15/067
2024/0408977	A1*	12/2024	Yhr	B60L 53/57

* cited by examiner

FIG.1

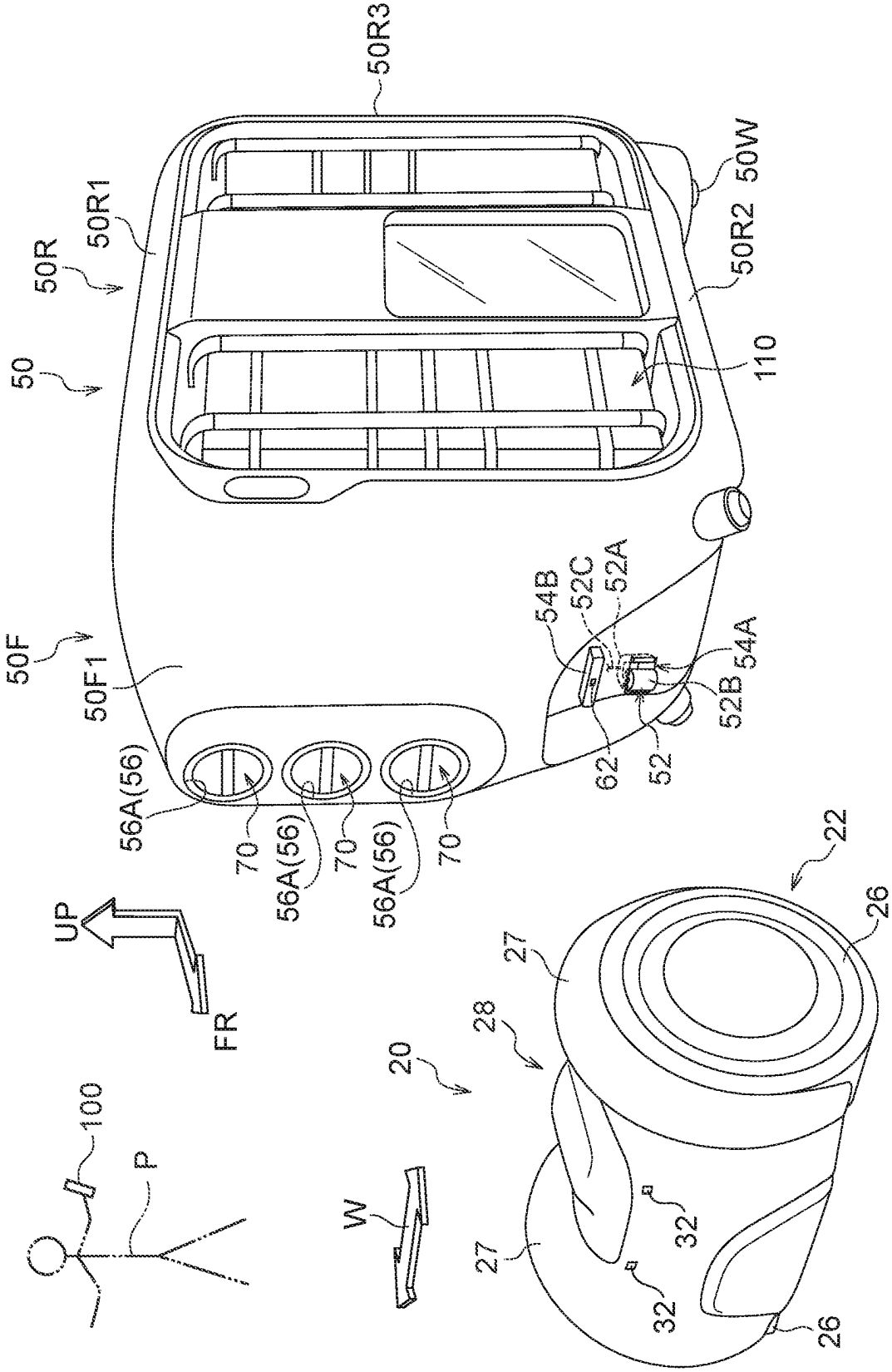
50R3
50W
50R2
50R1
50R
50
110
50F
50F1
54B
52C
52A
54A
52B
62
52
56A(56)
70
56A(56)
70
56A(56)
70
UP
FR
22
26
27
28
20
100
P
W
27
32
32
26

FIG.2

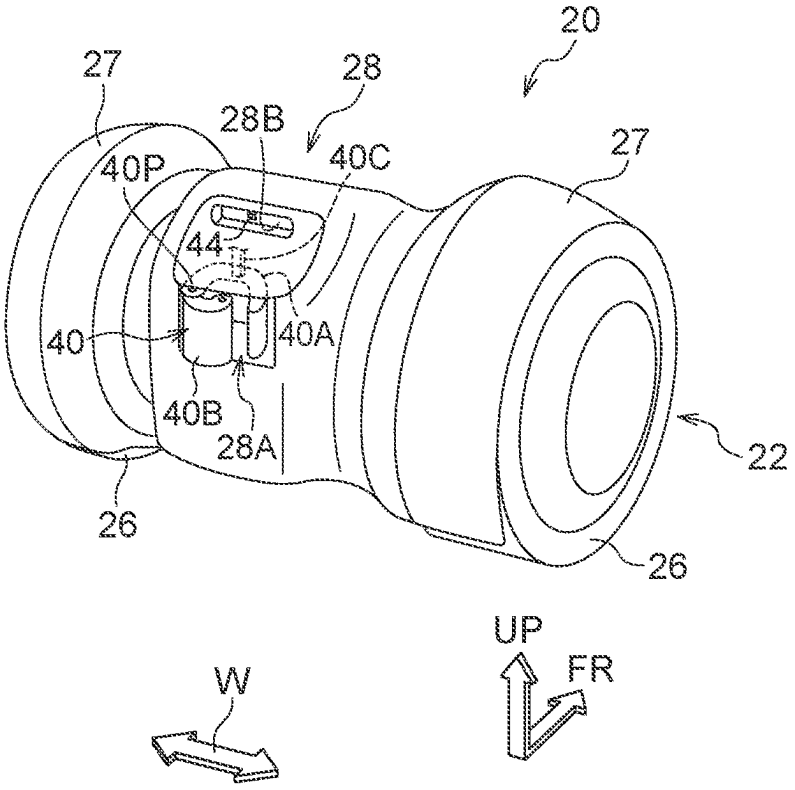

FIG.3A

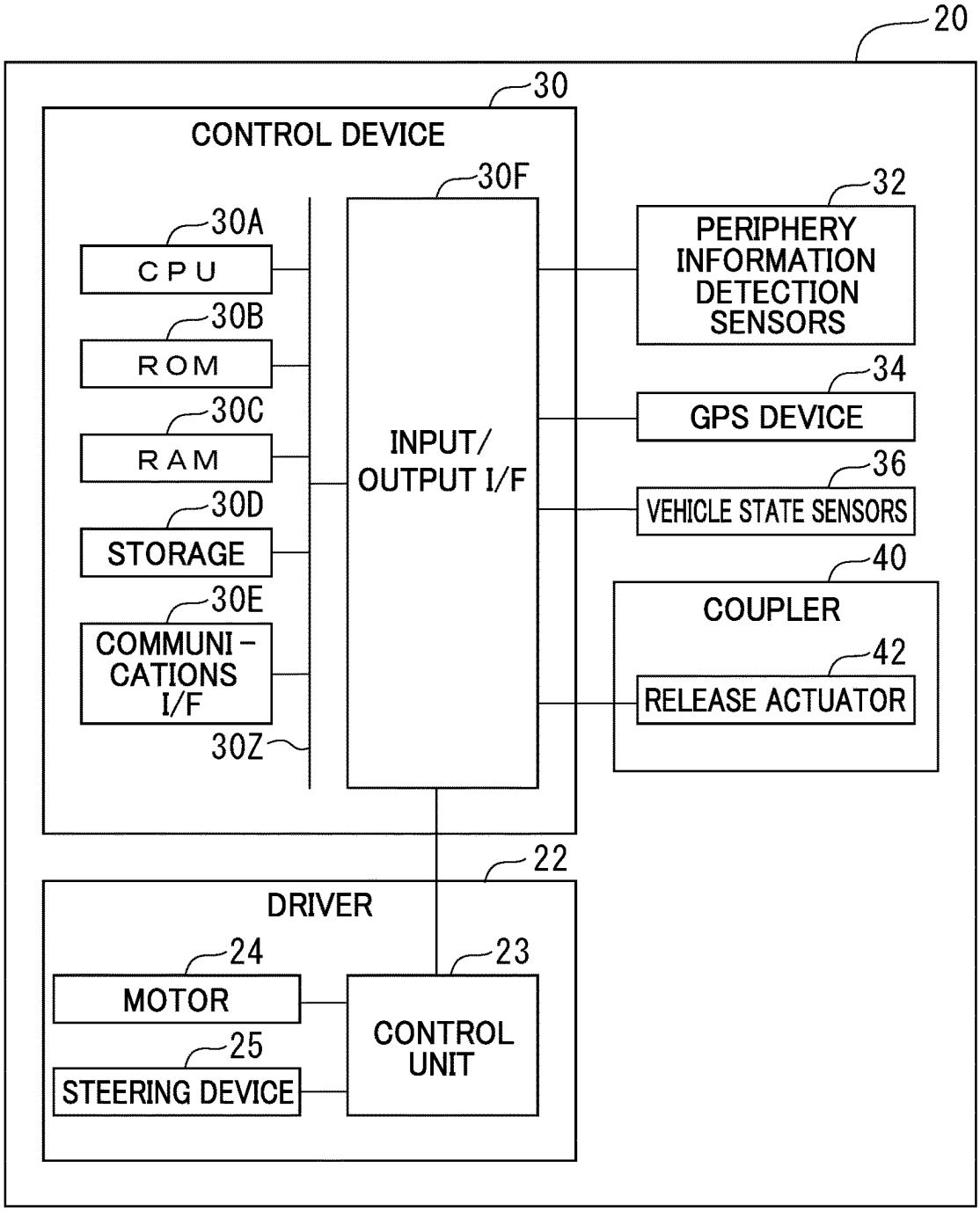
20
30
CONTROL DEVICE
30F
30A
CPU
30B
ROM
30C
RAM
30D
STORAGE
30E
COMMUNI-CATIONS I/F
30Z
INPUT/ OUTPUT I/F
32
PERIPHERY INFORMATION DETECTION SENSORS
34
GPS DEVICE
36
VEHICLE STATE SENSORS
40
COUPLER
42
RELEASE ACTUATOR
22
DRIVER
24
MOTOR
25
STEERING DEVICE
23
CONTROL UNIT

FIG.3B

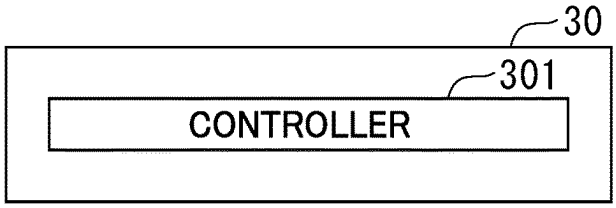
30
301
CONTROLLER

FIG.4

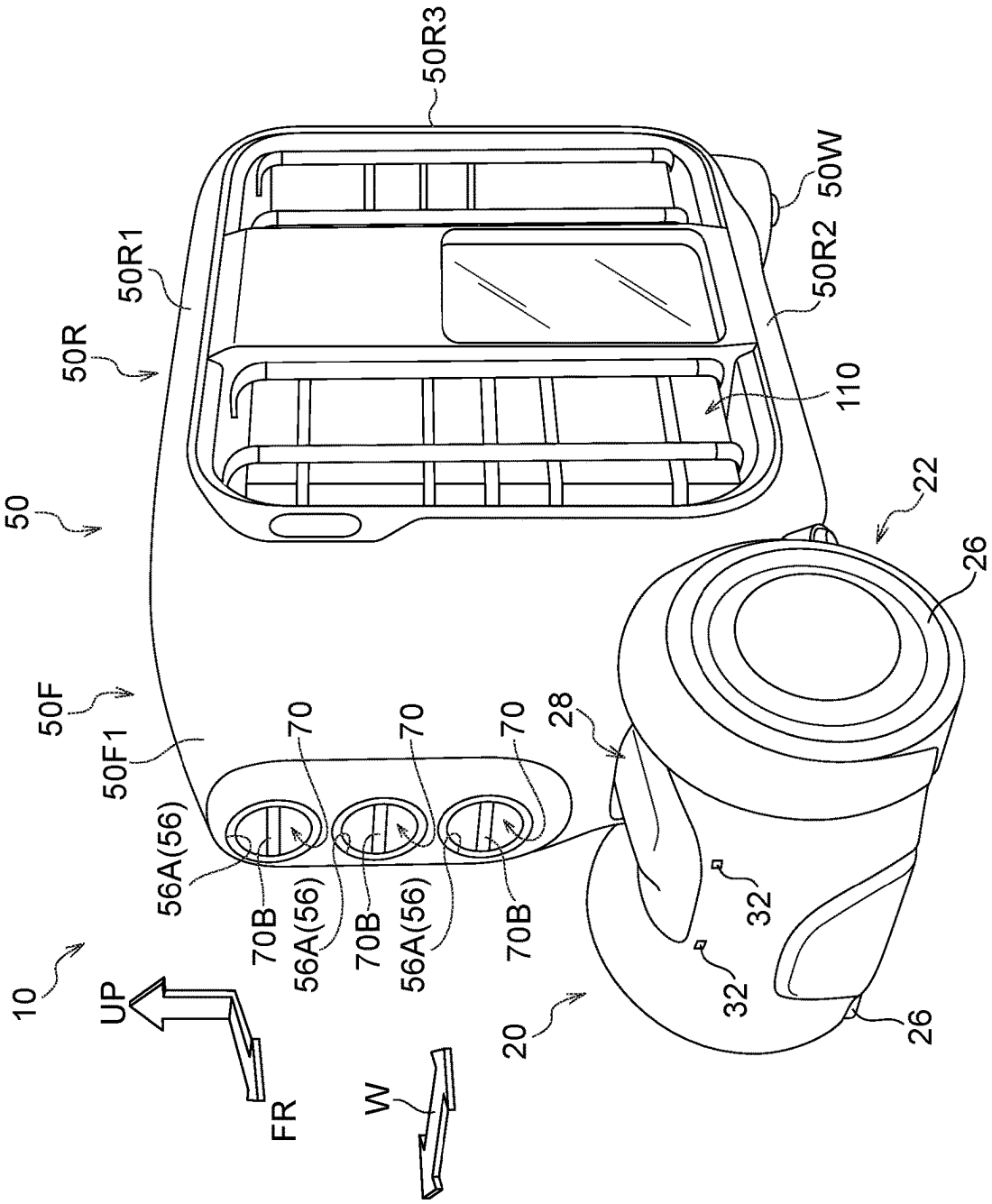
50R3
50W
50R2
50R1
50R
110
50
22
26
50F
50F1
70
70
70
28
56A(56)
70B
56A(56)
70B
56A(56)
70B
32
32
10
UP
FR
W
20
26

FIG.5

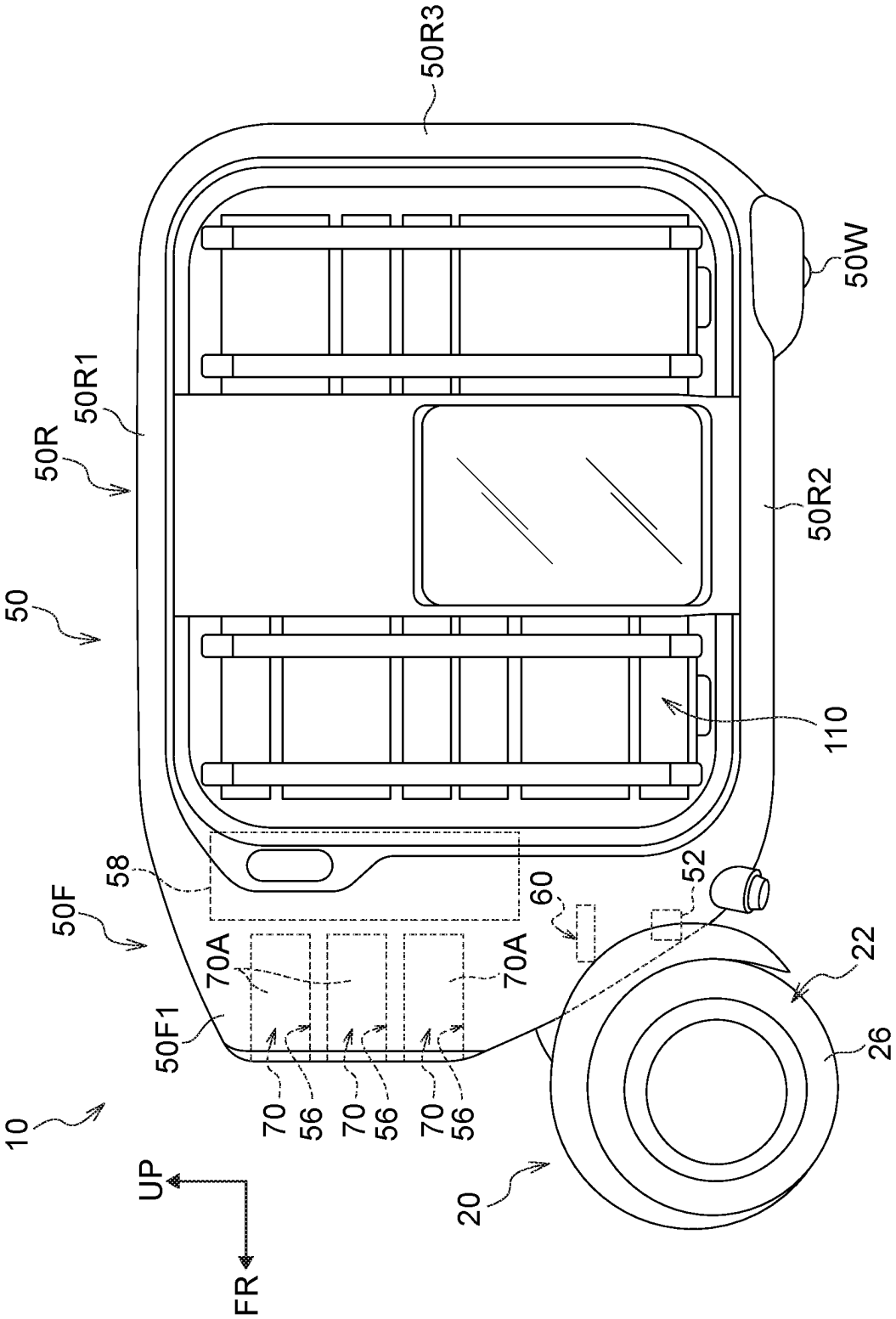
50R3
50W
50R1
50R
50R2
50
110
58
60
52
50F
70A
70A
22
50F1
26
70
56
70
56
70
56
10
UP
20
FR

FIG.6

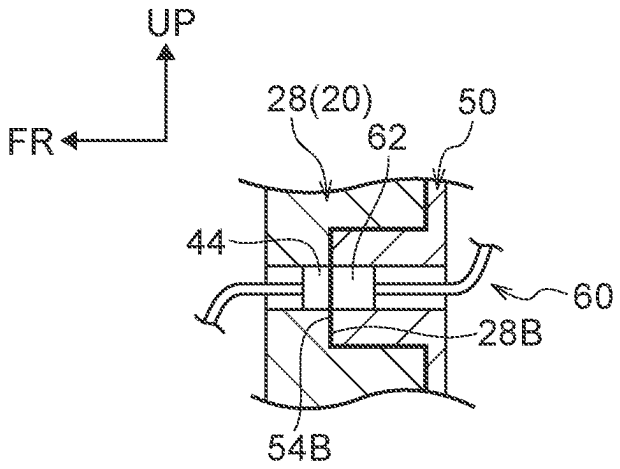

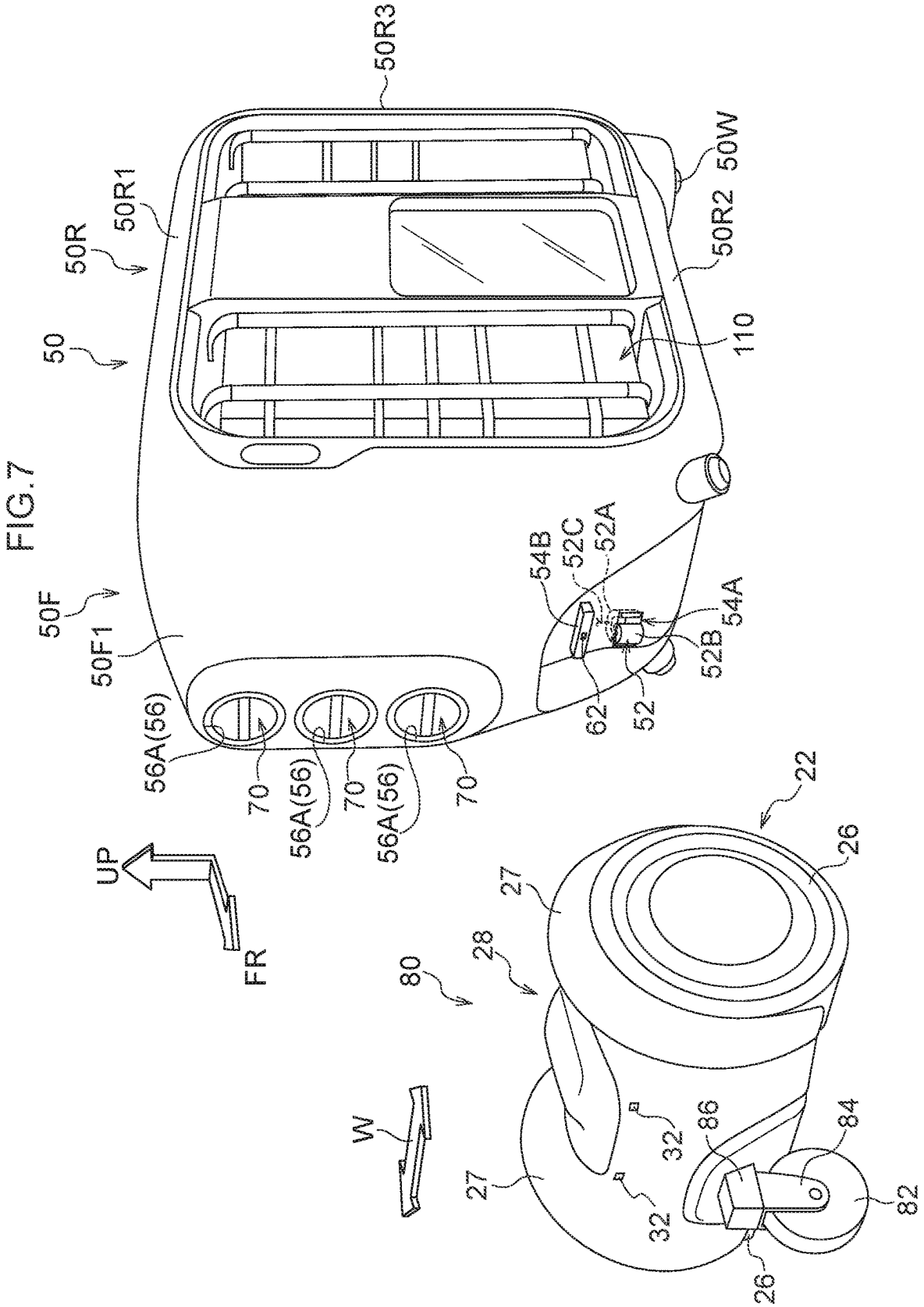
50R3
50W
50R2
50R1
50R
50
110
54B
52C
52A
54A
52B
52
62
50F
50F1
56A(56)
70
56A(56)
70
56A(56)
70
UP
FR
22
26
27
28
80
W
27
32
86
84
82
32
26

FIG.7

TRACTOR AND VEHICLE EQUIPPED WITH TRACTOR

CROSS-REFERENCE TO RELATED APPLICATION

This application is based on and claims priority under 35 USC 119 from Japanese Patent Application No. 2021-166467 filed on Oct. 8, 2021, the disclosure of which is incorporated by reference herein.

BACKGROUND

Technical Field

The present disclosure relates to a tractor and to a vehicle equipped with a tractor.

Related Art

Japanese Patent Application Laid-Open (JP-A) No. 2020-125090 discloses a towing vehicle (a tractor) that is equipped with autonomous driving functions.

The related technology mentioned above has scope for improvement in regard to a tractor that tows a trailer by autonomous running becoming more compact.

SUMMARY

An aspect of the present disclosure is a tractor that includes: a driver equipped with a left and right pair of driving wheels; a vehicle main body provided between the left and right pair of driving wheels; a periphery information detection sensor provided at the vehicle main body and detecting periphery information; a controller provided in the vehicle main body and controlling autonomous traveling by the driver in accordance with the periphery information detected by the periphery information detection sensor; and a first coupler provided at the vehicle main body and configured to be coupled to a trailer.

BRIEF DESCRIPTION OF DRAWINGS

FIG. **1** is a perspective view, seen from a diagonal forward side, showing an exemplary tractor according to a first exemplary embodiment of the present disclosure and a trailer to be towed by the tractor, in a state in which the tractor and trailer are uncoupled.

FIG. **2** is a perspective view, seen from a diagonal rearward side, showing the exemplary tractor in FIG. **1**.

FIG. **3**A is a block diagram showing some of exemplary hardware structures of the tractor in FIG. **1**.

FIG. **3**B is a block diagram showing an example of functional structures of a control device in FIG. **3**A.

FIG. **4** is a perspective view, seen from the diagonal forward side, showing a vehicle in which the exemplary tractor and trailer in FIG. **1** are coupled.

FIG. **5** is a side view, seen from sideward from the left side, showing the exemplary vehicle in FIG. **4**.

FIG. **6** is a simplified side sectional diagram showing a state in which a protrusion portion at a lower front face side of the exemplary trailer shown in FIG. **1** is inserted into a recess portion at a rear face side of a vehicle main body of the exemplary tractor shown in FIG. **2**.

FIG. **7** is a perspective view, seen from the diagonal forward side, showing an exemplary tractor according to a second exemplary embodiment of the present disclosure and a trailer to be towed by the tractor, in a state in which the tractor and trailer are uncoupled.

DETAILED DESCRIPTION

First Exemplary Embodiment

A tractor according to a first exemplary embodiment of the present disclosure and a vehicle that is equipped with the tractor are described using FIG. **1** to FIG. **6**. An arrow FR that is shown as appropriate in these drawings indicates a vehicle front side, an arrow UP indicates a vehicle upper side, and an arrow W indicates a vehicle width direction.

FIG. **1** is a perspective view, seen from a diagonal forward side, showing a tractor **20** according to the first exemplary embodiment and a trailer **50** to be towed by the tractor **20**, in a state in which the tractor **20** and trailer **50** are uncoupled. FIG. **2** is a perspective view, seen from a diagonal rearward side, showing the tractor **20**. The tractor **20** according to the present exemplary embodiment may be given predetermined operation commands from, for example, a portable device **100** of a user P shown in FIG. **1** or the like. The portable device **100**, includes, for example, a liquid crystal display equipped with a touch panel that enables touch operations by the user P. The tractor **20** is capable of, for example wireless communications with a server via a network.

As shown in FIG. **1** and FIG. **2**, the tractor **20** is equipped with a left and right pair of driving wheels **26**. The left and right pair of driving wheels **26** constitute portions of a driver **22** for causing autonomous running of the tractor **20**. A vehicle main body **28** is provided between the left and right pair of driving wheels **26**. Fender portions **27** that cover peripheries of the driving wheels **26** are formed continuously from both vehicle width direction sides of the vehicle main body **28**. As shown in FIG. **1**, vicinity information detection sensors **32** that detect vicinity information are provided at the vehicle main body **28**.

FIG. **3**A shows some of hardware structures of the tractor **20** in a block diagram. The tractor **20** includes a battery. As shown in FIG. **3**A, the tractor **20** includes the driver **22**, a control device **30**, the vicinity information detection sensors **32**, a global positioning system (GPS) device **34**, vehicle state sensors **36** and a coupler **40**.

The control device **30** is provided in the vehicle main body **28** (see FIG. **1**) and includes a central processing unit (CPU, or processor) **30**A, which is an example of a hardware processor, read-only memory (ROM) **30**B, which is an example of memory, random access memory (RAM) **30**C, storage **30**D, a communications interface **30**E ("communications I/F" in FIG. **3**A) and an input/output interface **30**F ("input/output I/F" in FIG. **3**A). The CPU **30**A, ROM **30**B, RAM **30**C, storage **30**D, communications interface **30**E and input/output interface **30**F are connected with one another to be capable of communications via a bus **30**Z.

The CPU **30**A is a central arithmetic processing unit that executes various programs and controls respective parts. That is, the CPU **30**A reads a program from the ROM **30**B or storage **30**D and executes the program, using the RAM **30**C as a work area. The CPU **30**A performs control of the structures described above and various kinds of computational processing in accordance with programs recorded in the ROM **30**B or storage **30**D.

The ROM **30**B stores various programs and various kinds of data. The RAM **30**C serves as a work area and temporarily memorizes programs and data. The storage **30**D is constituted with a memory device such as a hard disk drive (HDD), a solid state drive (SSD) or the like. The storage **30**D

stores various programs and various kinds of data. In the present exemplary embodiment, an autonomous driving control program for controlling autonomous running of the driver **22** in accordance with vicinity information detected by the vicinity information detection sensors **32** is stored in the ROM **30**B or storage **30**D. Map information and the like is memorized in the storage **30**D. The communications interface **30**E is an interface for the control device **30** to communicate with other equipment.

The input/output interface **30**F is an interface for communicating with various devices mounted at the tractor **20**. Via the input/output interface **30**F, the control device **30** according to the present exemplary embodiment is connected with, for example, a control unit **23** of the driver **22**, the vicinity information detection sensors **32**, the GPS device **34**, the vehicle state sensors **36**, and a release actuator **42** of the coupler **40**.

The driver **22** includes the control unit **23**, a motor **24**, a steering device **25** and the driving wheels **26** (see FIG. **1** and the like). The control unit **23** is a device that controls the motor **24** and the steering device **25** in response to command signals from the control device **30**. The motor **24** transmits driving force to the driving wheels **26**. The steering device **25** changes a steering angle of the driving wheels **26**.

The tractor **20** according to the present exemplary embodiment runs by operation of the driver **22**, and autonomous running of the tractor **20** is controlled by the control device **30**. That is, as a functional structure, the control device **30** includes a controller **301** shown in FIG. **3**B. The controller **301** controls autonomous running of the driver **22** in accordance with vicinity information detected by the vicinity information detection sensors **32**. This functional structure is realized by the CPU **30**A shown in FIG. **3**A loading and executing the autonomous driving control program memorized at the ROM **30**B or storage **30**D.

The vicinity information detection sensors **32** are a sensor group for gathering information about the surroundings of the tractor **20**. The vicinity information detection sensors **32** include, for example, a camera that images vicinity information of the tractor **20**. The vicinity information detection sensors **32** may also include at least one of, for example, a millimeter wave radar that transmits scanning waves in a predetermined range and receives reflected waves and a lidar (laser imaging detection and ranging) that scans a predetermined range.

The GPS device **34** is a device that measures a current position of the tractor **20**. The GPS device **34** includes an antenna that receives signals from GPS satellites. The vehicle state sensors **36** acquire information representing running states and operation states of the tractor **20**. The vehicle state sensors **36** include, for example, a steering sensor that detects steering angles of the tractor **20** and a speed sensor that detects running speeds of the tractor **20**.

As shown in FIG. **2**, the coupler **40** is provided at a rear portion of the vehicle main body **28** of the tractor **20**. The coupler **40** serves as a first coupler that can be coupled with the trailer **50**. The coupler **40** is provided with a coupler main body **40**A, a knuckle **40**B and a locking pin **40**C. In plan view, the coupler main body **40**A is formed in a substantial "U" shape that opens to a vehicle outer side. The knuckle **40**B is provided at a protruding side of the coupler **40** at one of left or right. The knuckle **40**B is attached to be turnable about a knuckle pin **40**P that is in the vehicle vertical direction. The locking pin **40**C is connected to a lock that locks the knuckle **40**B in a closed state. The basic structure of the coupler **40** is similar to widely known railway couplers in, for example, Japanese Patent No. 5,837,668 and the like. Accordingly, the basic structure of the coupler **40** is not described in detail here.

A coupler **52** with a similar structure to the coupler **40** (see FIG. **2**) is provided at a lower front face side of the trailer **50** shown in FIG. **1**. That is, the coupler **52** is equipped with a coupler main body **52**A, a knuckle **52**B and a locking pin **52**C (which are shown simplified in the drawings). The coupler **52** constitutes a second coupler that can be coupled to the coupler **40** (see FIG. **2**). When the tractor **20** and the trailer **50** are to be coupled, the couplers **40** and **52** are aligned with one another and pushed together in a state in which the knuckle **52**B and the knuckle **40**B shown in FIG. **2** are in respective open states. Accordingly, the knuckles **40**B and **52**B turn in closing directions thereof and the couplers **40** and **52** are automatically coupled with one another.

As an example, the coupler **40** is in a condition in which most of the coupler main body **40**A is accommodated in a recess portion **28**A formed in the vehicle main body **28**. Similarly, the coupler **52** shown in FIG. **1** is in a condition in which most of the coupler main body **52**A is accommodated in a recess portion **54**A formed in the trailer **50**.

The lock of the locking pin **40**C shown in FIG. **2** may be displaced to a lock release position by the release actuator **42** illustrated in FIG. **3**A. To add to this description, when a command to open the knuckle **40**B of the coupler **40** is transmitted from the portable device **100** of the user P shown in FIG. **1** and the communications interface **30**E shown in FIG. **3**A receives this command, the control device **30** is configured to give an operation command to the release actuator **42**, and the release actuator **42** operates.

The lock of the locking pin **52**C shown in FIG. **1** may be displaced to a lock release position by a release actuator provided at the trailer **50**. The release actuator provided at the trailer **50** is configured to be operated by, for example, a command inputted from a user interface provided at the trailer **50**.

As shown in FIG. **1**, the trailer **50** is equipped with a power supply connector **62**. A power supplier **60** (see FIG. **5**) that includes the power supply connector **62** is described below. The trailer **50** is equipped with a protrusion portion **54**B that protrudes to the vehicle front side, at the upper side of the coupler **52** at the lower front face side. The power supply connector **62** is provided at a front end portion of the protrusion portion **54**B.

As shown in FIG. **2**, a recess portion **28**B that is recessed to the vehicle front side is formed at the upper side of the coupler **40**, at an upper portion of the rear face side of the vehicle main body **28** of the tractor **20**. A power receiving connector **44** is provided at a recess floor side of the recess portion **28**B. In a state shown in FIG. **4** and FIG. **5** in which the tractor **20** is coupled to the trailer **50**, the protrusion portion **54**B of the trailer **50** (see FIG. **1**) is inserted into the recess portion **28**B of the tractor **20** (see FIG. **2**). FIG. **6** shows the state in which the protrusion portion **54**B of the trailer **50** is inserted into the recess portion **28**B of the tractor **20**, in a simplified side sectional diagram.

As shown in FIG. **6**, in the state in which the tractor **20** is coupled to the trailer **50**, the power receiving connector **44** is connected with the power supply connector **62**. Thus, the driver **22** is capable of using electric power supplied from the power supplier **60** via the power receiving connector **44** for running.

As shown in FIG. **4** and FIG. **5**, the trailer **50** includes an accommodation space former **50**R that forms an accommodation space at the rear side of a vehicle front portion **50**F. An outer profile portion **50**F**1** that forms an outer profile of

the vehicle front portion **50**F extends in the vehicle vertical direction. As shown in FIG. **1**, both of vehicle width direction end portions of a front side lower portion of the outer profile portion **50**F**1** of the vehicle front portion **50**F are angled to the vehicle rear side towards the vehicle lower side, and the front face side of the front side lower portion is recessed toward the vehicle rear side relative to the two vehicle width direction end portions.

As shown in FIG. **4** and FIG. **5**, the accommodation space former **50**R is provided continuously to the rear side of the vehicle front portion **50**F and, together with the outer profile portion **50**F**1** of the vehicle front portion **50**F, forms a frame shape in side view and forms an accommodation space thereinside. To add to this description, the accommodation space former **50**R is provided with a roof portion **50**R**1**, a floor portion **50**R**2** and a rear wall portion **50**R**3**. The roof portion **50**R**1** extends to the vehicle rear side from an upper end portion of the outer profile portion **50**F**1** of the vehicle front portion **50**F. The floor portion **50**R**2** extends to the vehicle rear side from a lower end portion of the outer profile portion **50**F**1** of the vehicle front portion **50**F. The rear wall portion **50**R**3** links a rear end portion of the roof portion **50**R**1** with a rear end portion of the floor portion **50**R**2** in the vehicle vertical direction. A load **110** may be placed in the accommodation space former **50**R, on the floor portion **50**R**2**. A left and right pair of wheels **50**W are provided at the lower side of a rear portion of the floor portion **50**R**2**.

As shown in FIG. **5**, tank storage portions **56** are formed in the vehicle front portion **50**F at the upper side of the coupler **52**. The tank storage portions **56** are capable of storing a plural number (for example, three) of hydrogen tanks **70** in a vertical array. Each tank storage portion **56** extends in the vehicle front-and-rear direction, and an insertion aperture **56**A is provided at the front end of the tank storage portion **56** (see FIG. **4**). Each hydrogen tank **70** is provided with a tank main body **70**A in a cylindrical container shape. A handle **70**B, shown in FIG. **4**, is formed at one end portion of a length direction of the tank main body **70**A. The handle **70**B is held by a user when the user is inserting the hydrogen tank **70** through the insertion aperture **56**A into the tank storage portion **56** and the like.

In the present exemplary embodiment, the hydrogen tank **70** is structured to be lockable. For example, the handle **70**B of the hydrogen tank **70** is gripped by a user and, in a state in which a spanning direction of the handle **70**B is in a vertical direction, the hydrogen tank **70** is inserted deep into the tank storage portion **56**. Then, when the hydrogen tank **70** is turned 90° about the axis thereof in the vehicle front-and-rear direction such that the spanning direction of the handle **70**B becomes a horizontal direction (the direction shown in FIG. **4**), the hydrogen tank **70** is locked.

As shown in FIG. **5**, a fuel cell **58** is provided in the vehicle front portion **50**F at the vehicle rear side of the tank storage portions **56**. The fuel cell **58** is connected with the hydrogen tanks **70** and an air compressor. The fuel cell **58** receives a supply of hydrogen from the hydrogen tanks **70** stored in the tank storage portions **56**, receives a supply of compressed air containing oxygen from the air compressor, and generates electricity.

The power supplier **60** (depicted as a block in the drawings) is mounted in the vehicle front portion **50**F at the lower side of the fuel cell **58**. The power supplier **60** supplies electric power from the fuel cell **58** through the power supply connector **62** shown in FIG. **6** to the tractor **20** via the power receiving connector **44**.

Operation and Effects

Now, operation and effects of the above exemplary embodiment are described.

As shown in FIG. **1** and FIG. **2**, the driver **22** of the tractor **20** according to the present exemplary embodiment is equipped with the left and right pair of driving wheels **26**, and the vehicle main body **28** is provided between the left and right pair of driving wheels **26**. The vicinity information detection sensors **32** provided at the vehicle main body **28** (see FIG. **1**) detect vicinity information. The controller **301** provided in the vehicle main body **28** (see FIG. **3**B) controls autonomous running of the driver **22** in accordance with vicinity information detected by the vicinity information detection sensors **32**. The coupler **40** provided at the vehicle main body **28** shown in FIG. **2** is coupled to the coupler **52** of the trailer **50** shown in FIG. **1**. Accordingly, the tractor **20** that tows the trailer **50** by autonomous running may be compact.

The tractor **20** according to the present exemplary embodiment is employed when the trailer **50** that is to be towed is equipped with the power supplier **60** including the power supply connector **62** (see FIG. **5**). The power receiving connector **44** shown in FIG. **2** is provided at the vehicle main body **28** and is connected with the power supply connector **62**. The driver **22** is capable of using electric power supplied from the power supplier **60** (see FIG. **5**) via the power receiving connector **44** for running. Therefore, the tractor may be more compact than a structure in which an electric power source for running the driver is mounted at the tractor.

As described above, according to the tractor **20** according to the present exemplary embodiment, while employing a compact structure, the tractor **20** may tow the trailer **50** by autonomous running.

As described above, a vehicle **10** according to the present exemplary embodiment that is shown in FIG. **5** and the like is provided with the tractor **20** and the trailer **50**. The trailer **50** includes the coupler **52**, the tank storage portions **56**, the fuel cell **58** and the power supplier **60** at the vehicle front portion **50**F, and the trailer **50** includes the accommodation space former **50**R at the rear side of the vehicle front portion **50**F. According to this structure, electric power is generated in the vehicle front portion **50**F of the trailer **50** that is disposed closer to the tractor **20** and may be supplied to the tractor **20**, and the load **110** may be placed at the rear side of the vehicle front portion **50**F of the trailer **50**. As necessary, the tractor **20** may be uncoupled from the trailer **50** and another trailer may be towed by the tractor **20**.

Second Exemplary Embodiment

Now, a second exemplary embodiment of the present disclosure is described using FIG. **7**. FIG. **7** is a perspective view, seen from the diagonal forward side, showing a tractor **80** according to the second exemplary embodiment and the trailer **50**, which is to be towed by the tractor **80**, in a state in which the tractor **80** and trailer **50** are uncoupled. As shown in FIG. **7**, the tractor **80** according to the present exemplary embodiment differs from the tractor **20** according to the first exemplary embodiment (see FIG. **1**) in that a wheel **82**, which is smaller than the driving wheels **26**, is provided at the front side in the vehicle front-and-rear direction of the vehicle main body **28**. Other structures are the same as in the first exemplary embodiment except in the respects described below. Structural portions that are the same as in the first exemplary embodiment are assigned the same reference symbols and are not described here.

As shown in FIG. **7**, the wheel **82** is disposed at a vehicle width direction central portion of the front side in the vehicle front-and-rear direction of the vehicle main body **28**. The

wheel **82** is turnably supported by a bracket **84**. A support portion **86** protrudes from the vehicle width direction central portion at the front side in the vehicle front-and-rear direction of the vehicle main body **28**. The bracket **84** is turnable relative to the support portion **86** about an axis in the vehicle vertical direction.

According to the present exemplary embodiment, the same operation and effects as in the first exemplary embodiment described above may be provided, in addition to which running of the tractor **80** may be made more stable.

Supplementary Descriptions of the Exemplary Embodiments

In the first and second exemplary embodiments described above, structures are described in which the trailer **50** shown in FIG. **1** and FIG. **7** is equipped with the power supplier **60** including the power supply connector **62** (see FIG. **5**). However, structures are possible in which a trailer is not equipped with a power supplier and a tractor may be run by electric power from a power source mounted at the tractor.

In the first and second exemplary embodiments described above, the coupler **40** (see FIG. **2**) is employed as the first coupler and the coupler **52** is employed as the second coupler. However, alternative coupling structures including fittings and the like may be employed for the first coupler and the second coupler.

In the second exemplary embodiment described above, the wheel **82** that is smaller than the driving wheels **26** is provided at the front side in the vehicle front-and-rear direction of the vehicle main body **28**. As a variant example, instead of the wheel **82**, a wheel that is smaller than the driving wheels (**26**) may be provided at the rear side in the vehicle front-and-rear direction of the vehicle main body (**28**).

The exemplary embodiments described above and variant examples mentioned above may be embodied in suitable combinations.

Above, illustrative examples of the present disclosure are described, but the present disclosure is not limited by these descriptions; numerous modifications beyond these descriptions may be embodied within a technical scope not departing from the gist of the disclosure.

The present disclosure provides a tractor that, while employing a compact structure, may tow a trailer by autonomous running, and provides a vehicle equipped with the tractor.

A first aspect of the present disclosure is a tractor that includes: a driver equipped with a left and right pair of driving wheels; a vehicle main body provided between the left and right pair of driving wheels; a periphery information detection sensor provided at the vehicle main body and detecting periphery information; a controller provided in the vehicle main body and controlling autonomous traveling by the driver in accordance with the periphery information detected by the periphery information detection sensor; and a first coupler provided at the vehicle main body and configured to be coupled to a trailer.

According to the first aspect, the driver is equipped with the left and right pair of driving wheels, and the vehicle main body is provided between the left and right pair of driving wheels. The vicinity information detection sensor provided at the vehicle main body detects vicinity information. The controller provided in the vehicle main body controls autonomous driving of the driver in accordance with the vicinity information detected by the vicinity information detection sensor. The first coupler provided at the vehicle main body can be coupled to a trailer. Accordingly, a tractor that tows a trailer by autonomous running may become more compact.

A second aspect of the present disclosure is the tractor of the first aspect, that further includes a power supplier including a power supply connector, wherein the vehicle main body has a power receiving connector coupled to the power supply connector, and the driver is configured to be capable of driving by the driver using electric power supplied from the power supplier via the power receiving connector.

According to the second aspect, if a trailer is equipped with the power supplier including the power supply connector, the power receiving connector that can be connected with the power supply connector is provided at the vehicle main body, and the driver is configured to be capable of using electric power supplied from the power supplier via the power receiving connector for running of the driver. Therefore, the tractor may be more compact than a structure in which an electric power source for running the driver is mounted at the tractor.

A third aspect of the present disclosure is the tractor of the first aspect or the second aspect that further includes, at one of a front side or a rear side in a vehicle front-and-rear direction of the vehicle main body, a wheel that is smaller than the driving wheels.

According to the third aspect, running of the tractor may be made more stable by the wheel provided at the front side or rear side in the vehicle front-and-rear direction of the vehicle main body.

A fourth aspect of the present disclosure is a vehicle that includes: the tractor of the second aspect; and the trailer, the trailer including, at a vehicle front portion: a second coupler configured to be coupled to the first coupler, a plurality of tank storages at an upper side of the second coupler, the plurality of tank storages being capable of storing a plurality of hydrogen tanks in a vertical array, a fuel cell receiving a supply of hydrogen from the hydrogen tanks stored in the tank storages and generating electric power, and the power supplier, the power supplier supplying electric power from the fuel cell through the power supply connector to the tractor via the power receiving connector, wherein the trailer further includes an accommodation space former forming an accommodation space at a rear side of the vehicle front portion.

According to the fourth aspect, the tractor may be compact, electric power may be generated in the vehicle front portion of the trailer, which is disposed closer to the tractor, and the electric power may be supplied to the tractor. Moreover, a load may be placed at the rear side of the vehicle front portion of the trailer. As necessary, the tractor may be uncoupled from the trailer and another trailer may be towed by the tractor.

According to the present disclosure, while employing a compact structure, a tractor may tow a trailer by autonomous running.

What is claimed is:

1. A tractor comprising:

a driver equipped with a left and right pair of driving wheels;

a vehicle main body provided between the left and right pair of driving wheels, the vehicle main body including a recess portion providing a power receiving connector configured to be coupled to a power supply connector of a power supplier, and the driver is configured to be

capable of driving by the driver using electric power supplied from the power supplier via the power receiving connector;

a periphery information detection sensor provided at the vehicle main body and detecting periphery information;

a controller provided in the vehicle main body and controlling autonomous traveling by the driver in accordance with the periphery information detected by the periphery information detection sensor; and

a first coupler provided at the vehicle main body and configured to be coupled to a trailer, the first coupler comprising a coupler main body and a knuckle rotatably connected to the coupler main body between an open state and a closed state.

2. The tractor according to claim **1**, further comprising, at one of a front side or a rear side in a vehicle front-and-rear direction of the vehicle main body, a wheel that is smaller than the driving wheels.

3. The tractor according to claim **1**, wherein the tractor is a substantially circular cylinder, both end faces of which respectively correspond to each of the driving wheels.

4. A vehicle comprising:

the tractor according to claim **1**; and

the trailer, the trailer including, at a vehicle front portion:

a second coupler configured to be coupled to the first coupler,

a plurality of tank storages at an upper side of the second coupler, the plurality of tank storages being capable of storing a plurality of hydrogen tanks in a vertical array,

a fuel cell receiving a supply of hydrogen from the hydrogen tanks stored in the tank storages and generating electric power, and

the power supplier, the power supplier supplying electric power from the fuel cell through the power supply connector to the tractor via the power receiving connector, wherein the trailer further includes an accommodation space former forming an accommodation space at a rear side of the vehicle front portion.

5. The vehicle according to claim **4**, wherein the plurality of tank storages extend in a vehicle front-and-rear direction and include insertion apertures at front ends thereof.

6. The tractor according to claim **1**, wherein the coupler main body has a U-shape configuration.

7. The tractor according to claim **1**, wherein the first coupler further comprises a lock pin that retains the knuckle in the closed state.

8. The vehicle according to claim **4**, wherein the trailer includes a protrusion portion providing the power supply connector, the protrusion disposed within the recess portion and connecting the power supply connector with the power receiving connector.

* * * * *