US012408323B2

(12) **United States Patent**
Cho et al.

(10) **Patent No.: US 12,408,323 B2**
(45) **Date of Patent: Sep. 2, 2025**

(54) **SEMICONDUCTOR MEMORY DEVICE AND METHOD FOR MANUFACTURING THE SAME**

(71) Applicant: **Samsung Electronics Co., Ltd.**, Suwon-si (KR)

(72) Inventors: **Seongkeun Cho**, Suwon-si (KR); **Hee Young Park**, Hwaseong-si (KR); **Jin Hyung Park**, Bucheon-si (KR); **Kun Tack Lee**, Suwon-si (KR); **Jung Hyuk Jang**, Suwon-si (KR); **Chun Hyung Chung**, Seoul (KR)

(73) Assignee: **Samsung Electronics Co., Ltd.**, Gyeonggi-Do (KR)

(*) Notice: Subject to any disclaimer, the term of this patent is extended or adjusted under 35 U.S.C. 154(b) by 398 days.

(21) Appl. No.: **18/049,732**

(22) Filed: **Oct. 26, 2022**

(65) **Prior Publication Data**

US 2023/0128492 A1 Apr. 27, 2023

(30) **Foreign Application Priority Data**

Oct. 26, 2021 (KR) 10-2021-0143385

(51) **Int. Cl.**
H10B 12/00 (2023.01)

(52) **U.S. Cl.**
CPC ***H10B 12/315*** (2023.02); ***H10B 12/50*** (2023.02)

(58) **Field of Classification Search**
None
See application file for complete search history.

(56) **References Cited**

U.S. PATENT DOCUMENTS

6,916,690	B2	7/2005	Chang
7,901,974	B2	3/2011	Venezia et al.
8,158,486	B2	4/2012	Van Bentum et al.
8,278,690	B2	10/2012	Mao et al.

(Continued)

FOREIGN PATENT DOCUMENTS

JP	2013-16707	A	1/2013
KR	10-2011-0062414	A	6/2011
KR	10-2021-0049231	A	5/2021

OTHER PUBLICATIONS

Korean Office Action dated Jun. 23, 2025 issued in Korean Patent Application No. 10-2021-0143385.

Primary Examiner — Steven M Page
(74) *Attorney, Agent, or Firm* — Harness, Dickey & Pierce, P.L.C.

(57) **ABSTRACT**

There is provided a semiconductor memory device capable of improving the performance and/or the reliability of a device. The semiconductor memory device includes a substrate having a cell area and a peripheral area defined along a periphery of the cell area, wherein the cell area includes an active area defined by a cell element separation film, a cell area separation film in the substrate and defining the cell area, and a plurality of storage contacts connected to the active area, and arranged along a first direction. The plurality of storage contacts includes a first storage contact, a second storage contact, and a third storage contact, wherein the second storage contact is between the first storage contact and the third storage contact, each of the first storage contact and the third storage contact contains or surrounds or defines an airgap, and the second storage contact is free of an airgap.

20 Claims, 38 Drawing Sheets

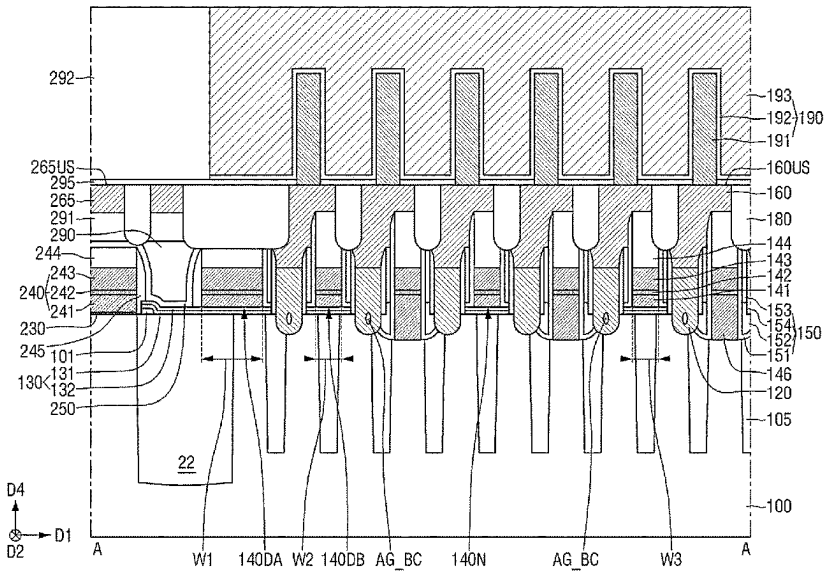

(56) **References Cited**

U.S. PATENT DOCUMENTS

8,921,220	B2	12/2014	Wenxu et al.	
2019/0296019	A1*	9/2019	Wu	H10B 12/50
2021/0098632	A1	4/2021	Duriez et al.	
2022/0310624	A1*	9/2022	Lu	H10B 12/0335
2022/0320104	A1*	10/2022	Zhu	H10B 12/315

* cited by examiner

FIG. 1

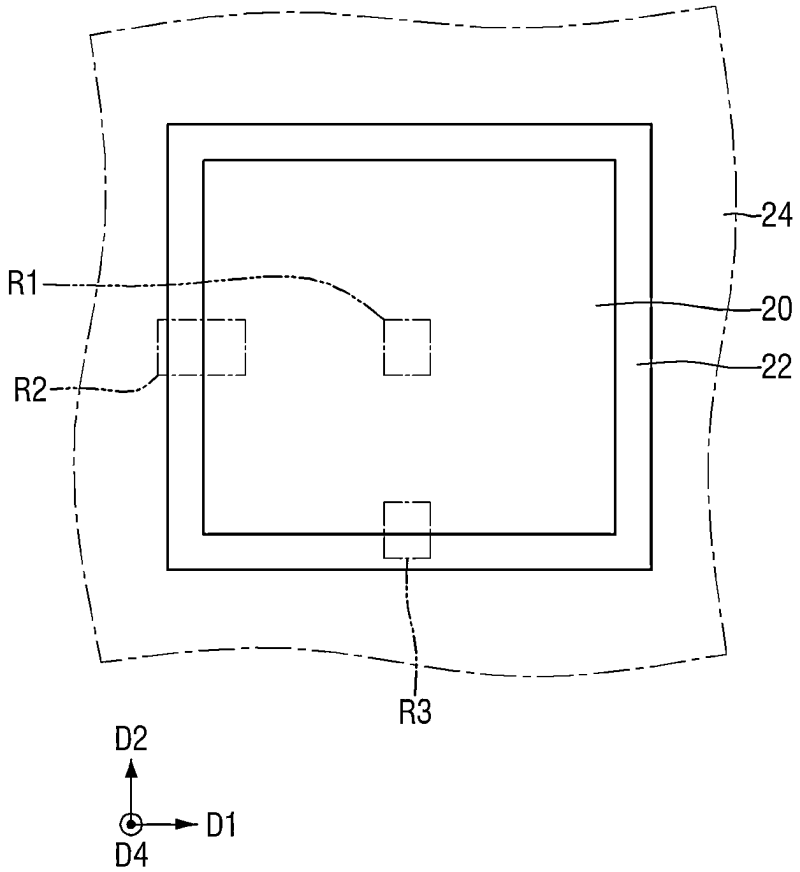

FIG. 2

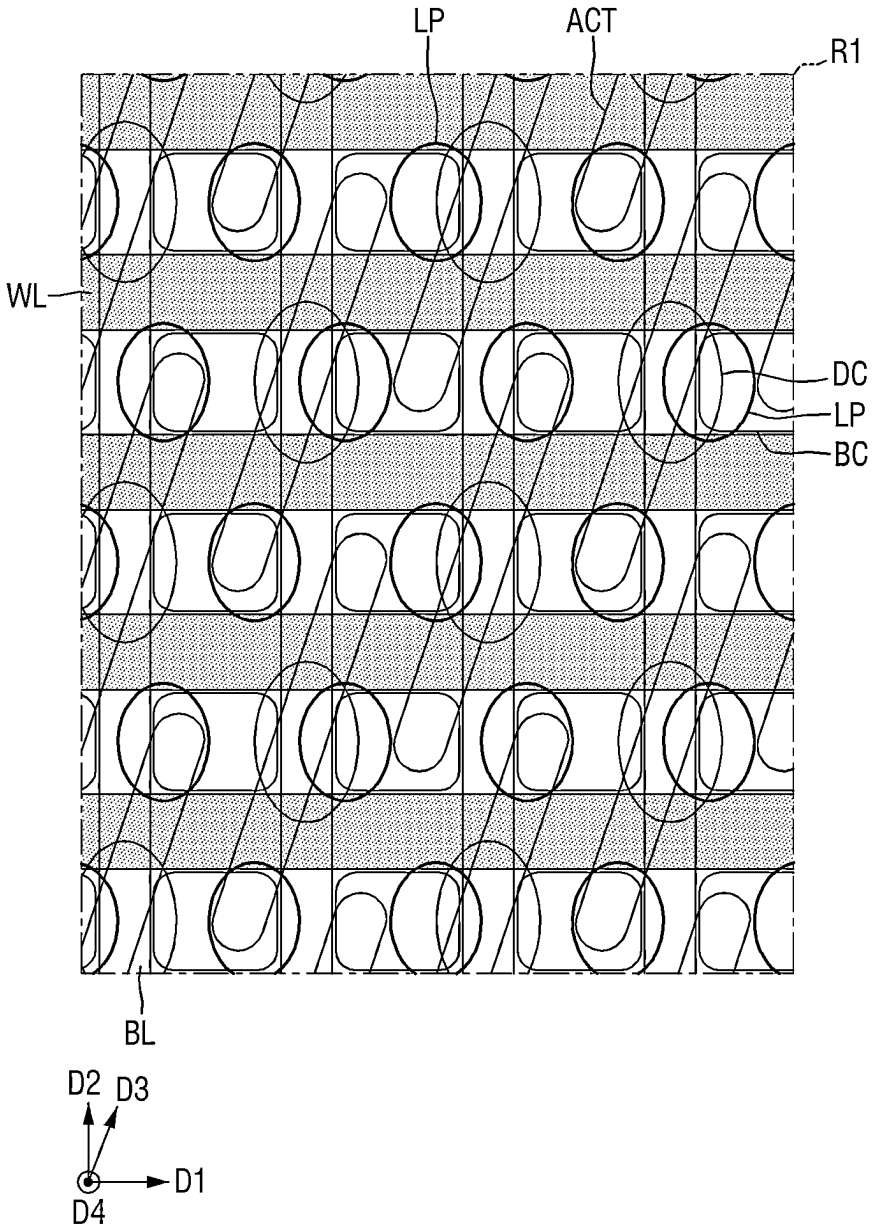

FIG. 3

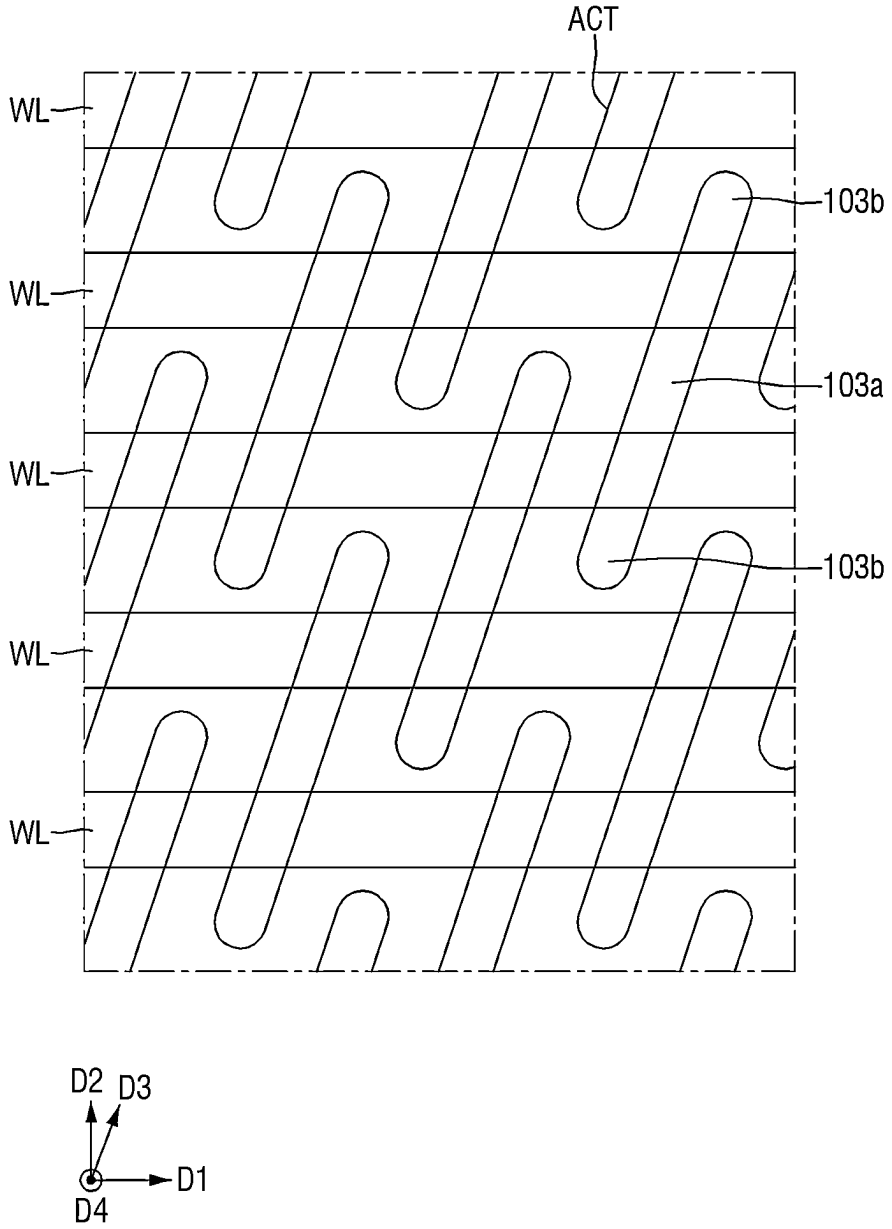

FIG. 4

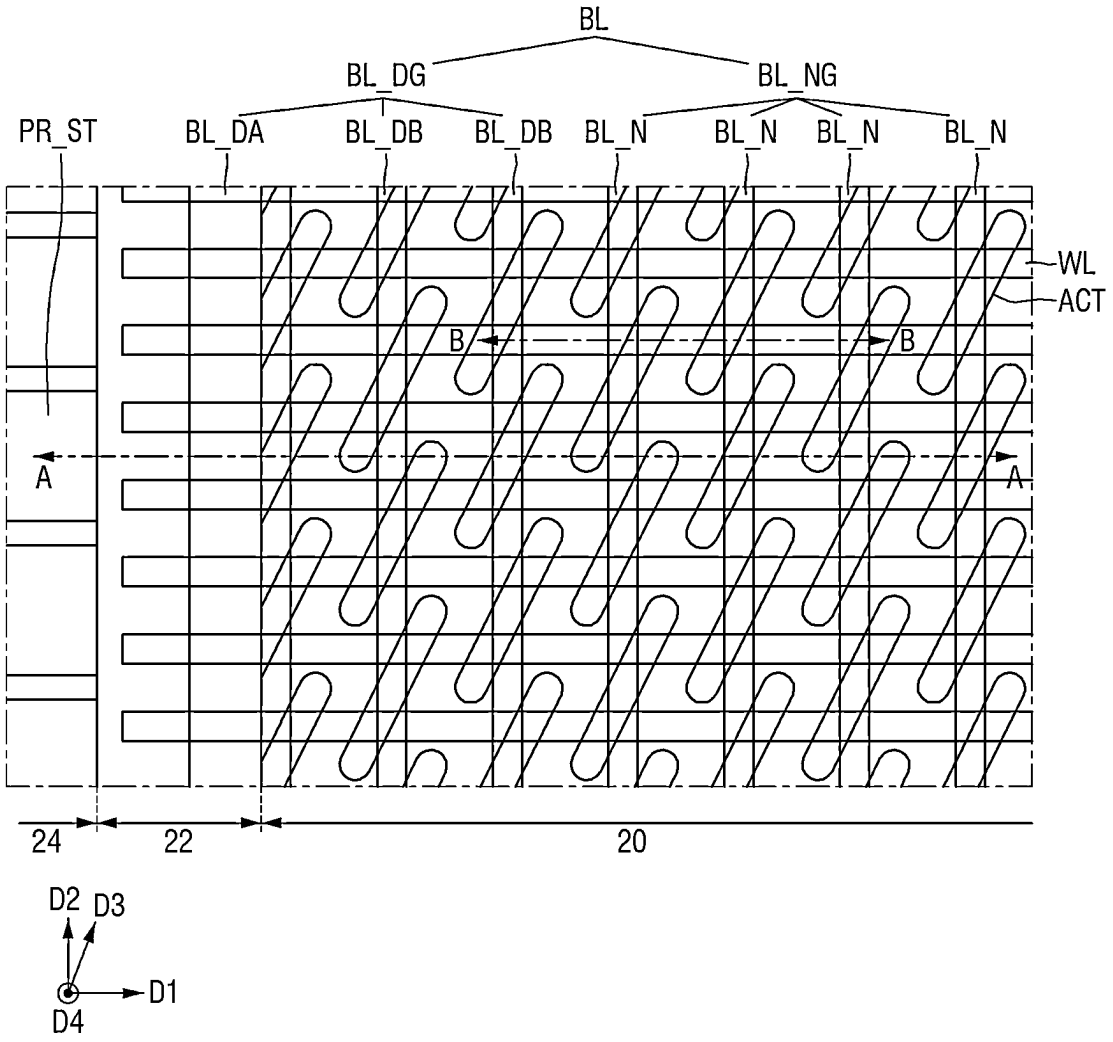
BL
BL_DG
BL_NG
PR_ST
BL_DA
BL_DB
BL_DB
BL_N
BL_N
BL_N
BL_N
WL
ACT
B
B
A
A
24
22
20
D2
D3
D1
D4

FIG. 5

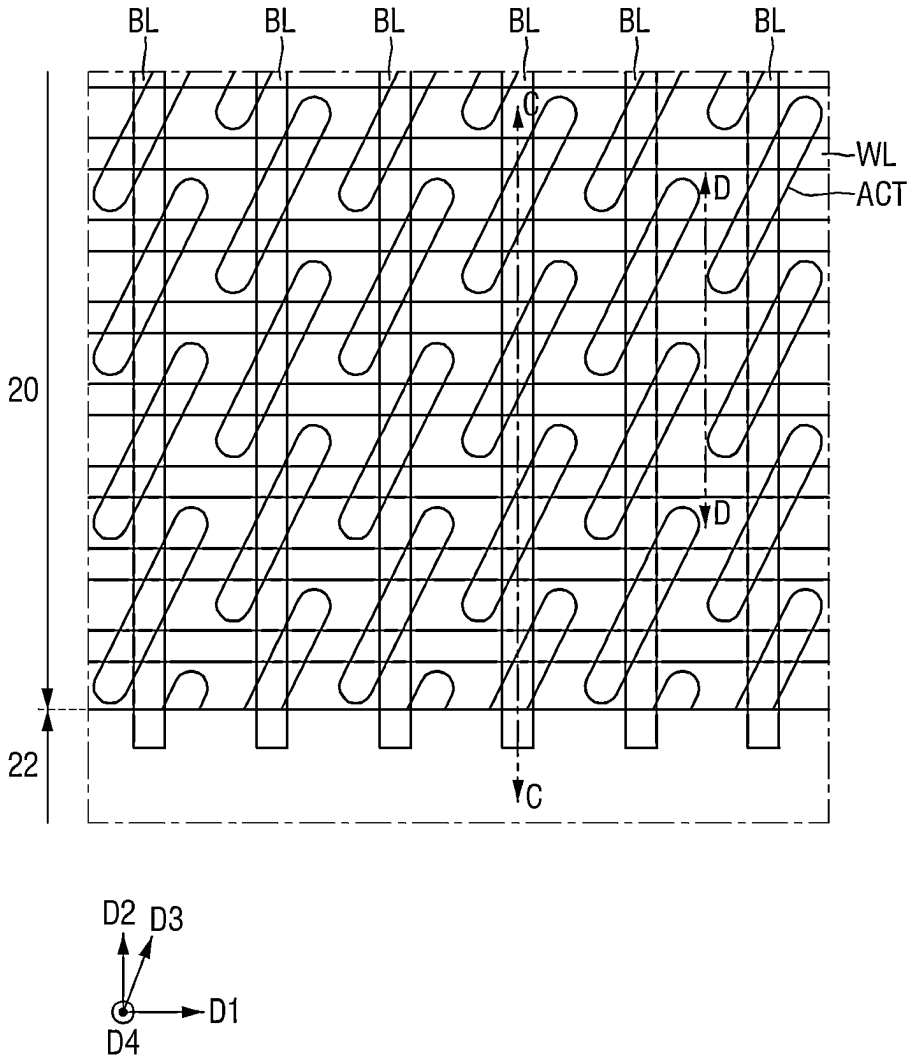

FIG. 6

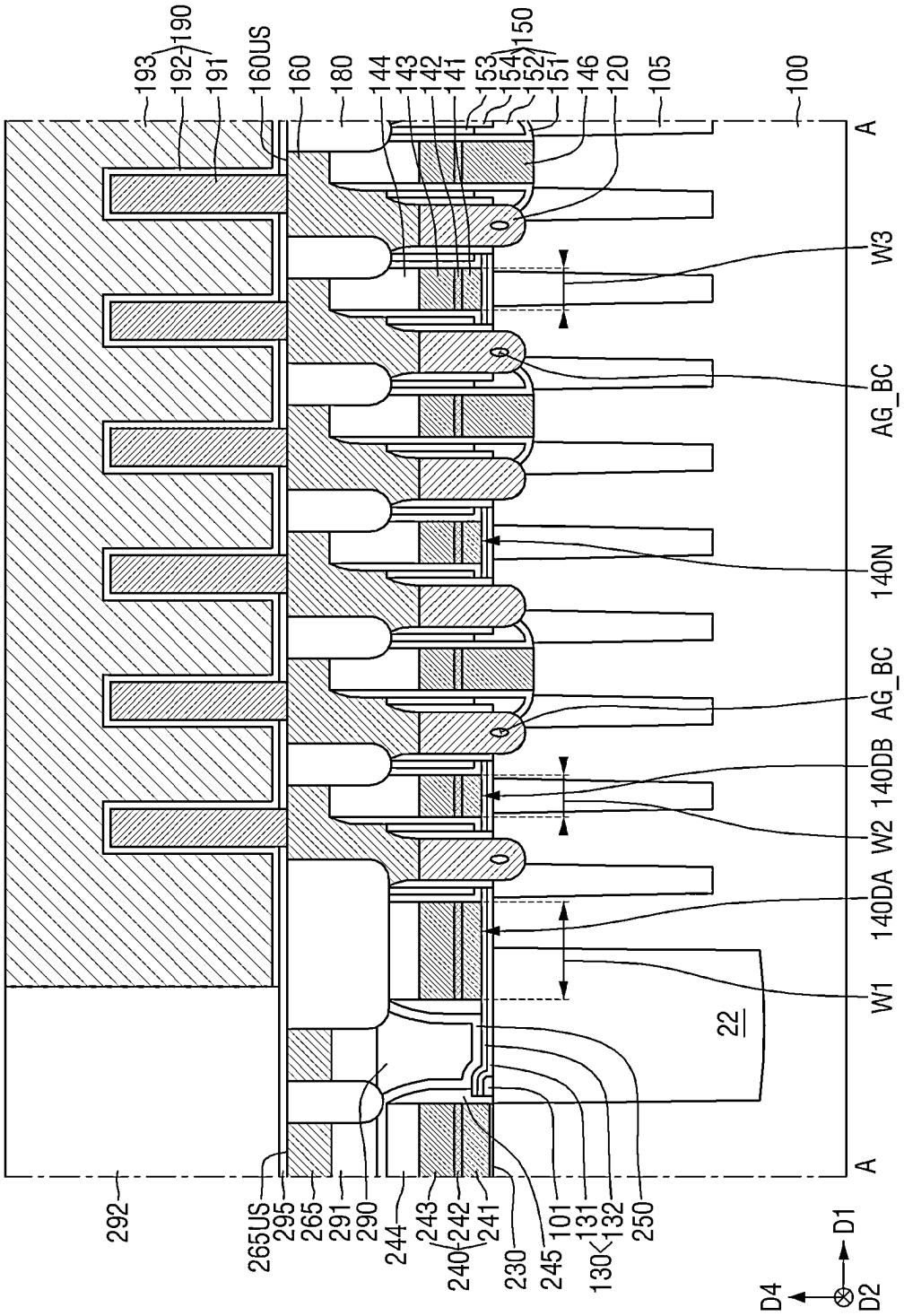
193
192
190
191
160US
160
180
144
143
142
141
153
154
150
152
151
146
120
105
100
A
W3
AG_BC
140N
AG_BC
140DB
W2
140DA
W1
22
A
292
265US
295
265
291
290
244
243
240
242
241
230
245
101
131
130
132
250
D4
D1
D2

FIG. 7

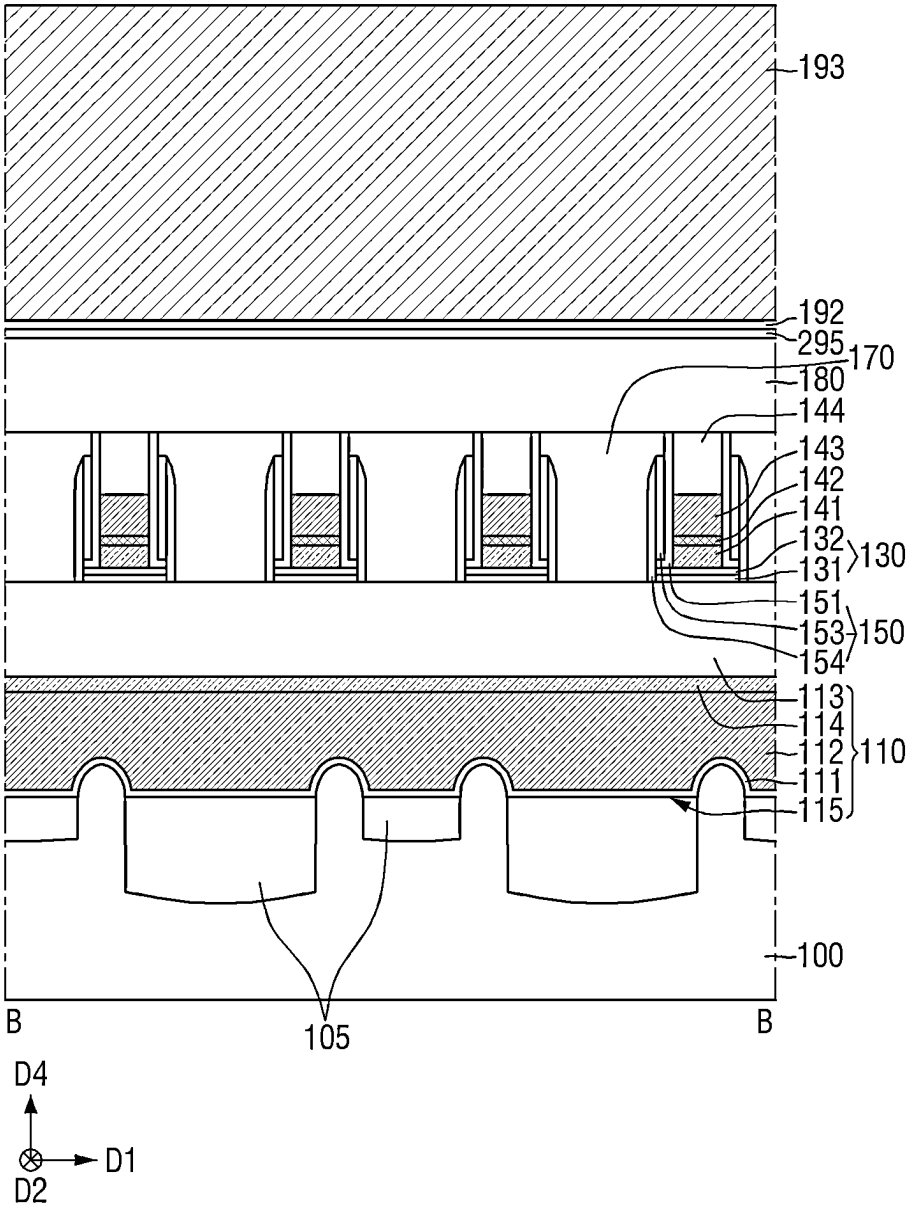
193
192
295
170
180
144
143
142
141
132
131
130
151
153
150
154
113
114
112
110
111
115
100
B
105
B
D4
D1
D2

FIG. 8

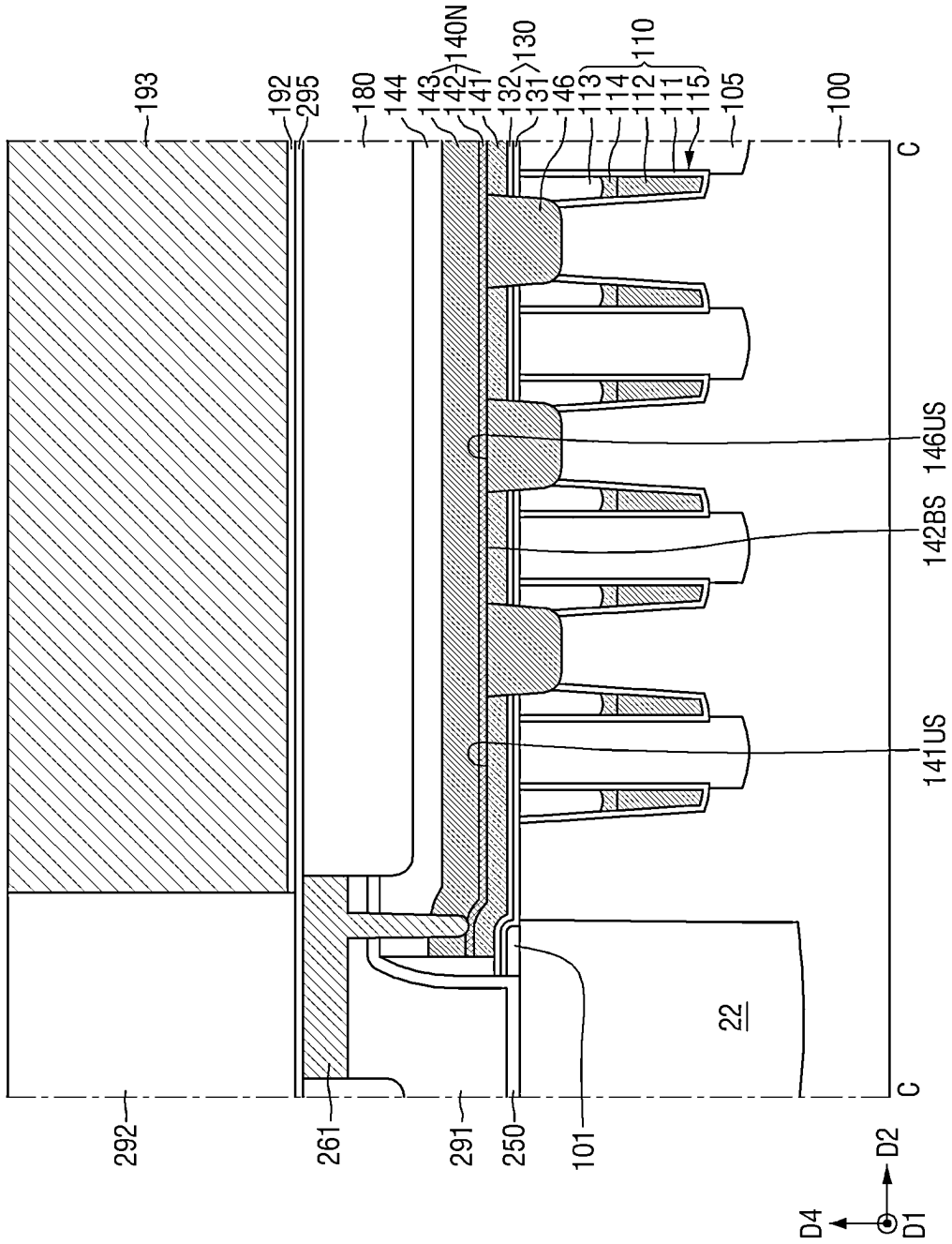
193
192
295
180
144
143
142
140N
41
132
130
31
146
13
14
12
110
11
15
105
100
C
146US
142BS
141US
22
C
292
261
291
250
101
D2
D1
D4

FIG. 9

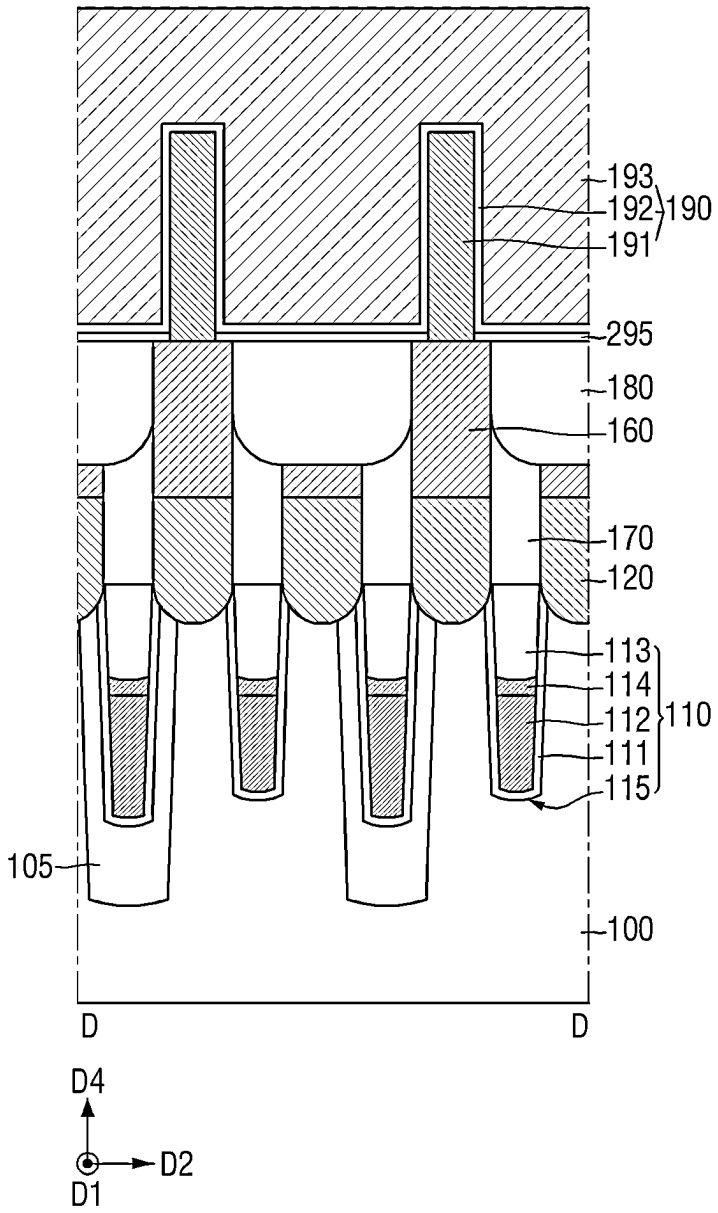
193
192
190
191
295
180
160
170
120
113
114
112
110
111
115
105
100
D
D
D4
D2
D1

FIG. 10

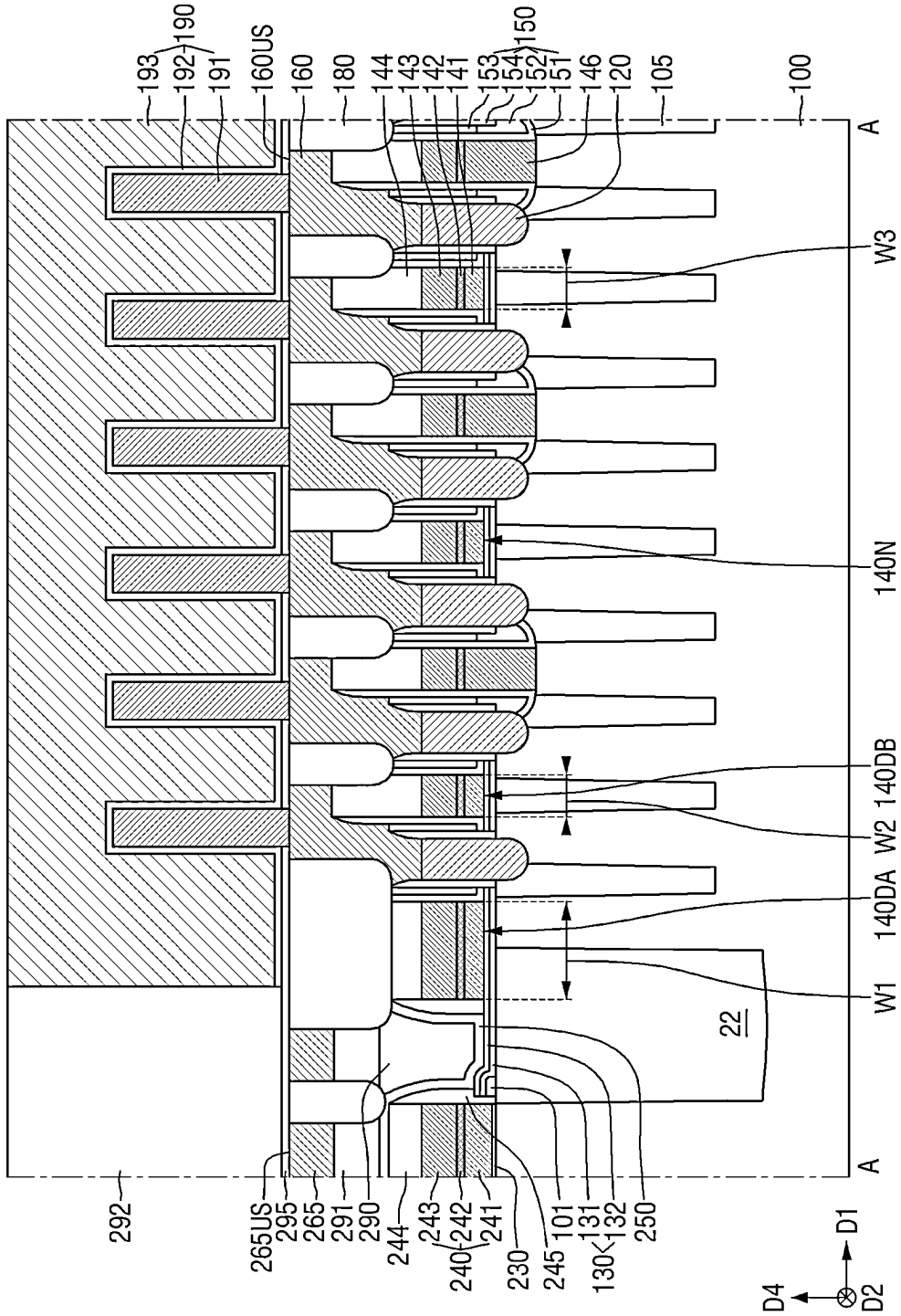
193
192
190
191
160US
160
180
144
143
142
141
153
154
150
152
151
146
120
105
100
A
W3
140N
140DB
W2
140DA
W1
22
A
292
265US
295
265
291
290
244
243
242
240
241
230
245
101
131
130
132
250
D1
D2
D4

FIG. 11

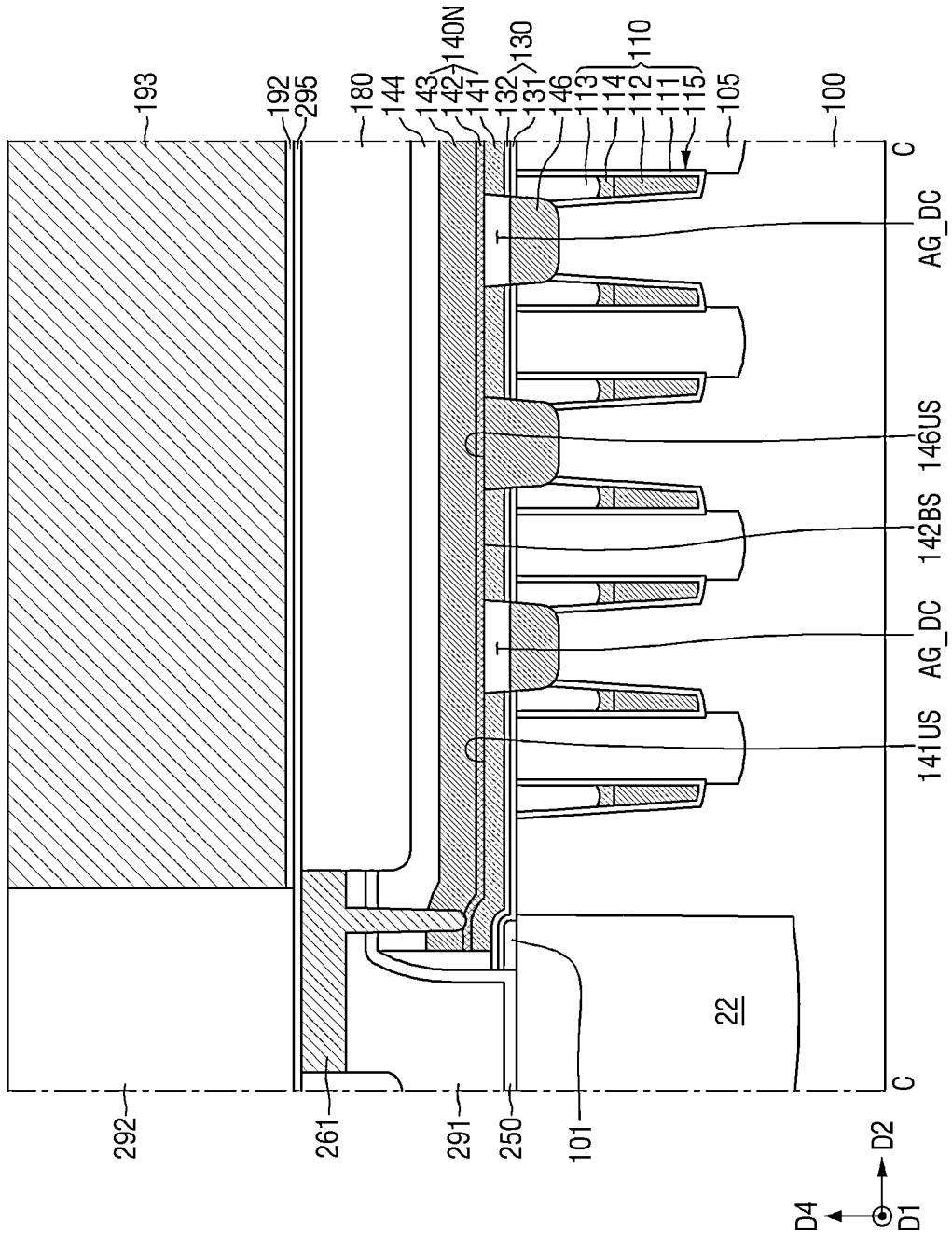
193
192
295
180
144
143
142
140N
141
132
130
131
146
113
114
112
110
111
115
105
100
C
AG_DC
146US
142BS
AG_DC
141US
22
C
292
261
291
250
101
D2
D4
D1

FIG. 12

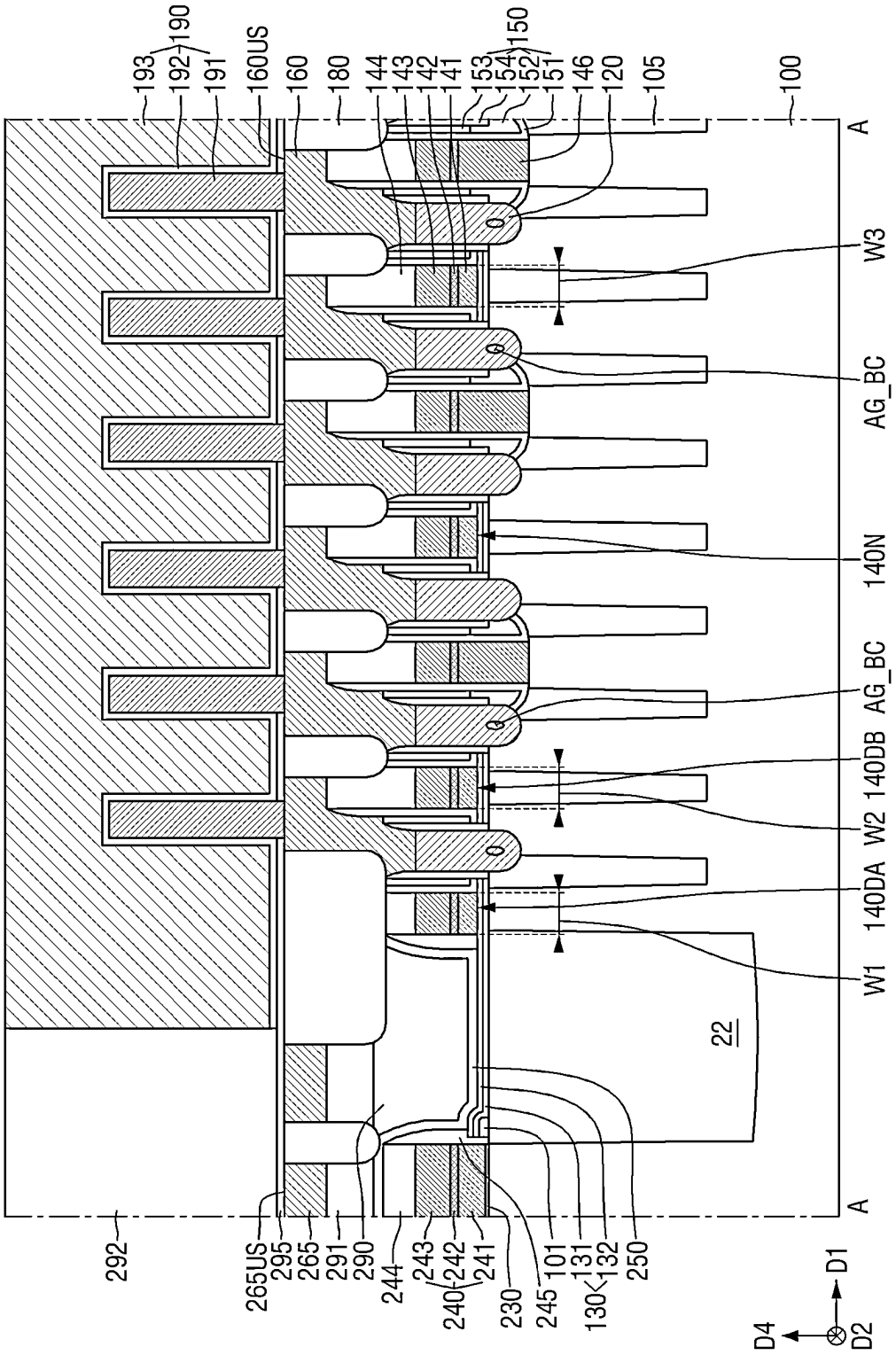
193
192
190
191
160US
160
180
144
143
142
141
153
154
152
150
151
146
120
105
100
A
W3
AG_BC
140N
AG_BC
140DB
W2
140DA
W1
22
A
292
265US
295
265
291
290
244
243
242
240
241
230
245
101
131
130
132
250
D4
D2
D1

FIG. 13

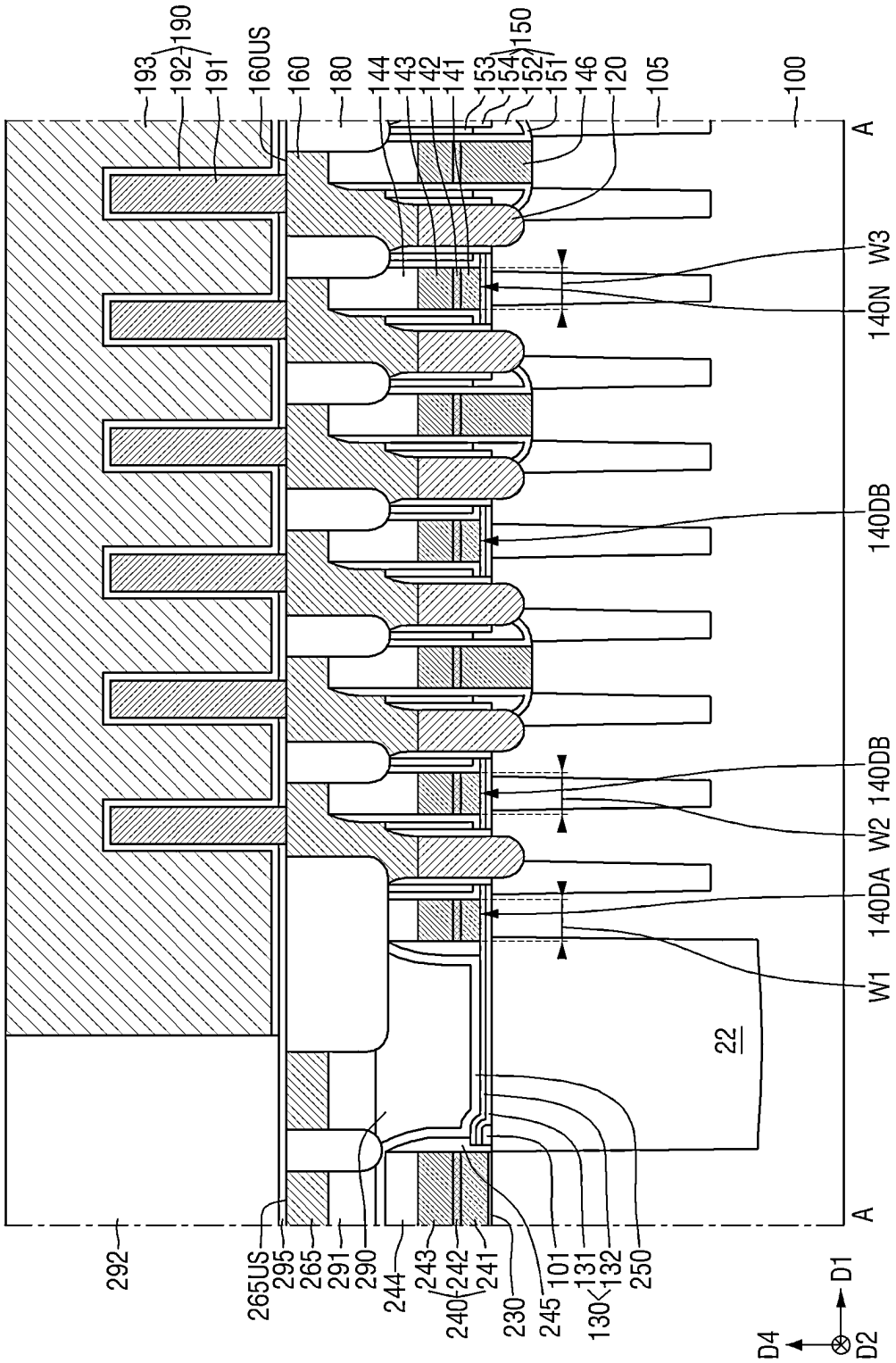
193
192
190
191
160US
160
180
144
143
142
141
153
154
150
152
151
146
120
105
100
A
W3
140N
140DB
140DB
W2
140DA
W1
22
A
292
265US
295
265
291
290
244
243
242
240
241
230
245
101
131
130
132
250
D4
D2
D1

FIG. 14

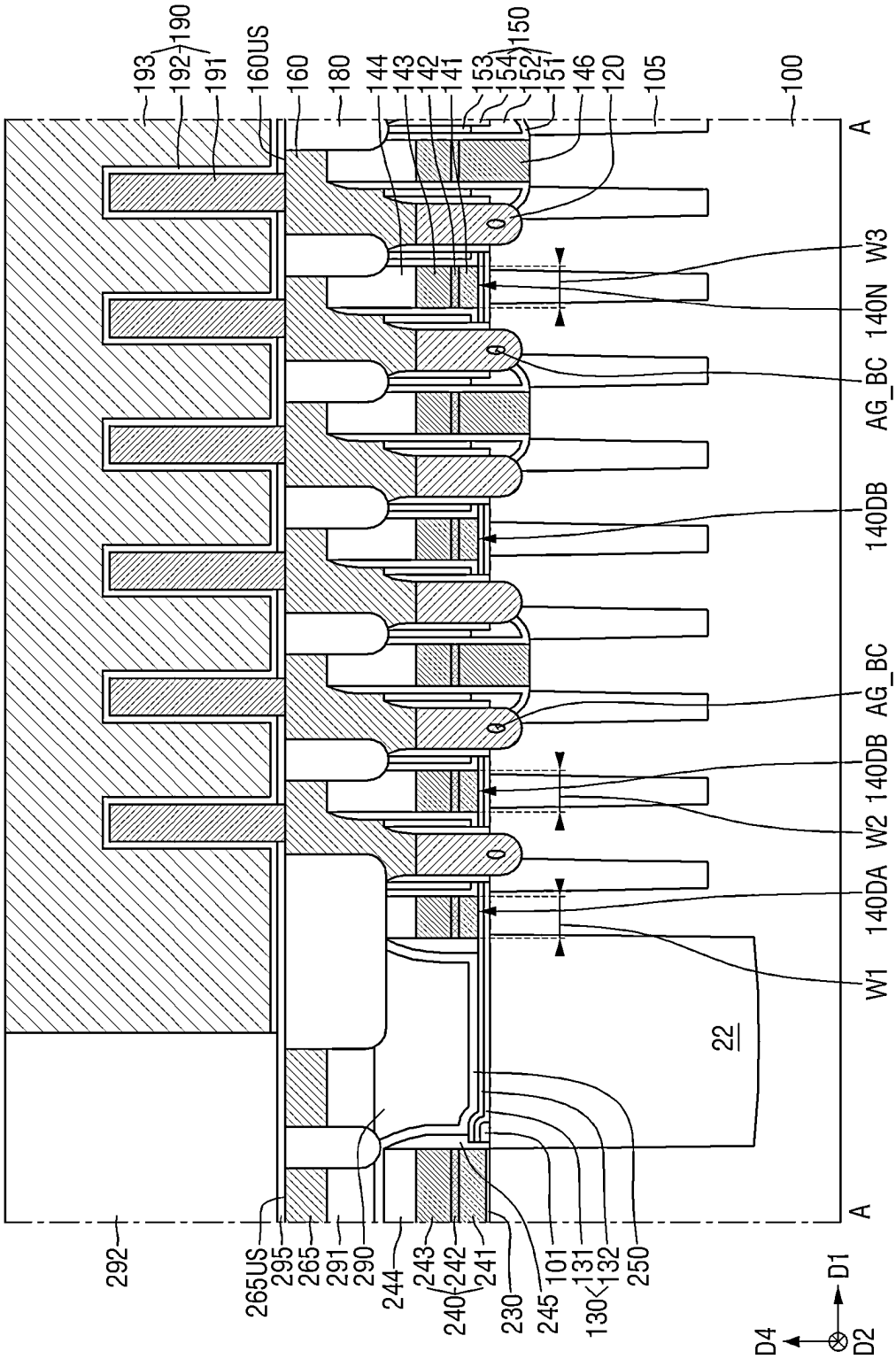
193
192
190
191
160US
160
180
144
143
142
141
153
154
150
152
151
146
120
105
100
A
W3
140N
AG_BC
140DB
AG_BC
140DB
W2
140DA
W1
22
A
292
265US
295
265
291
290
244
243
240
242
241
230
245
101
130
131
132
250
D4
D2
D1

FIG. 15

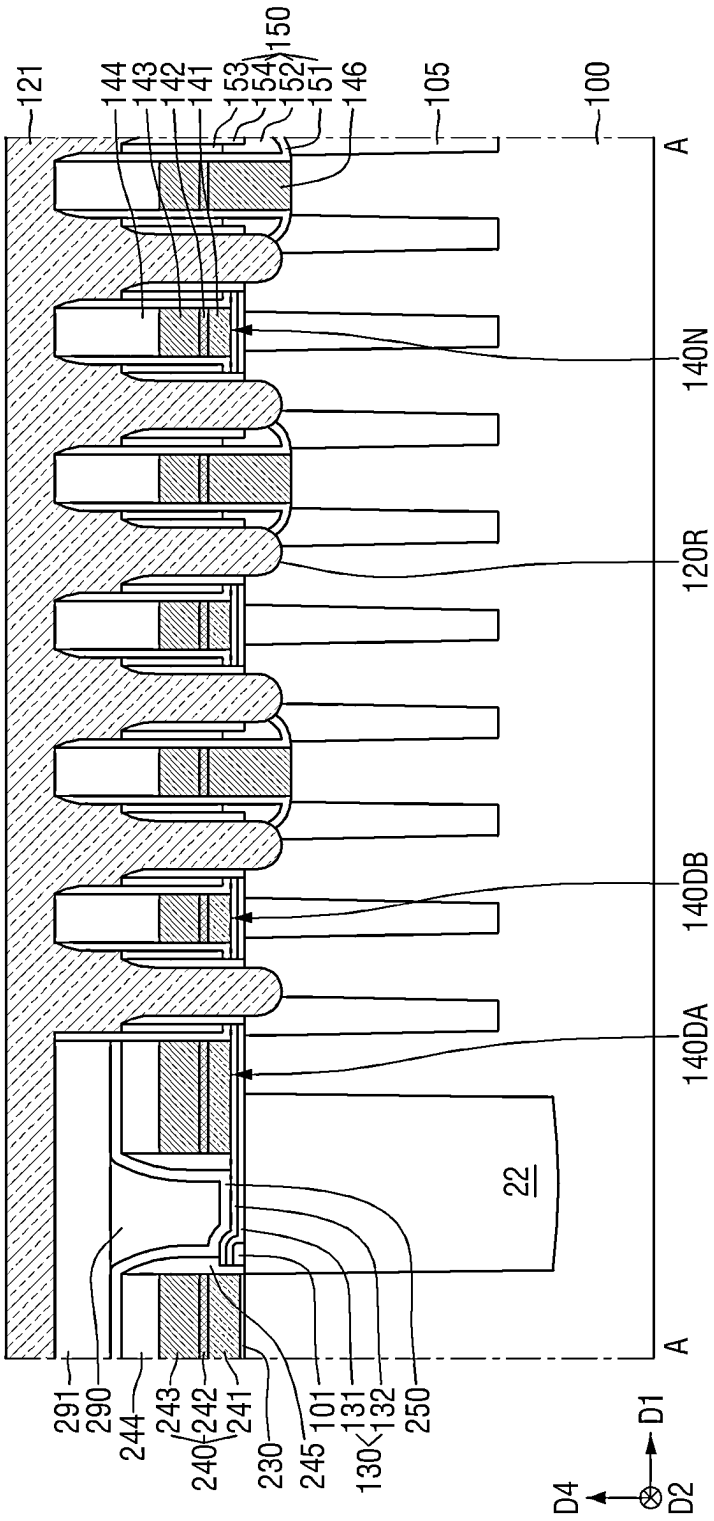
121
144
143
142
141
153
154
150
152
151
146
105
100
A
140N
120R
140DB
140DA
22
A
291
290
244
243
242
240
241
230
245
101
131
130
132
250
D4
D1
D2

FIG. 16

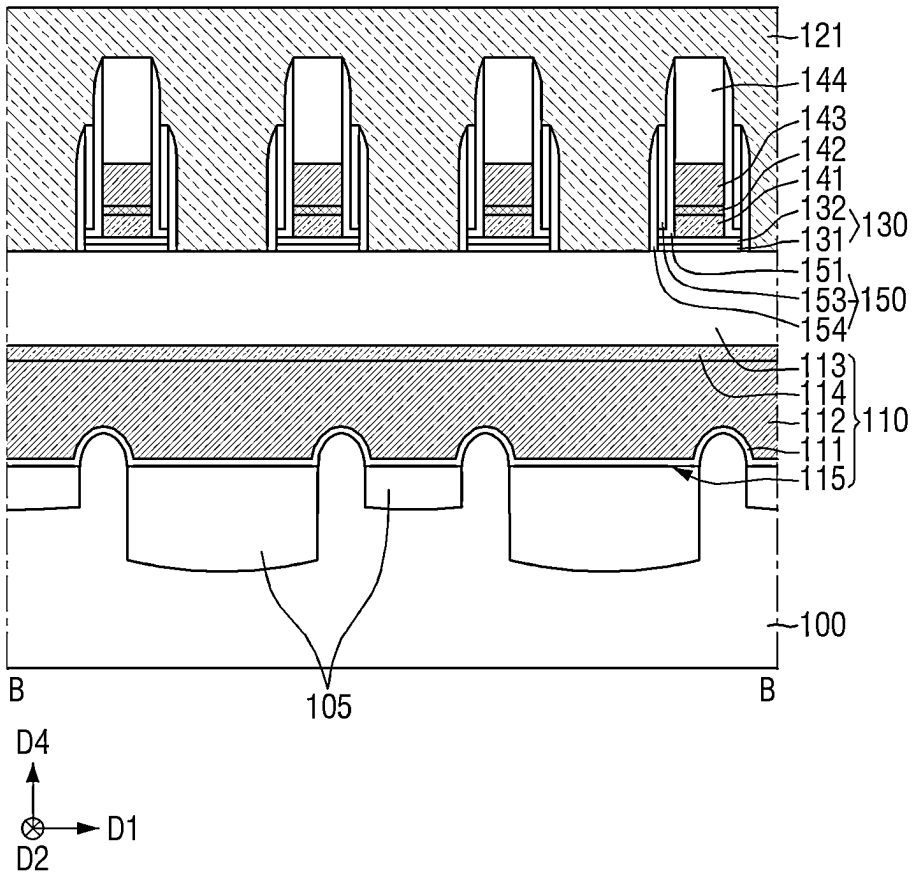
121
144
143
142
141
132
131
130
151
153
154
150
113
114
112
111
110
115
100
B
105
B
D4
D1
D2

FIG. 17

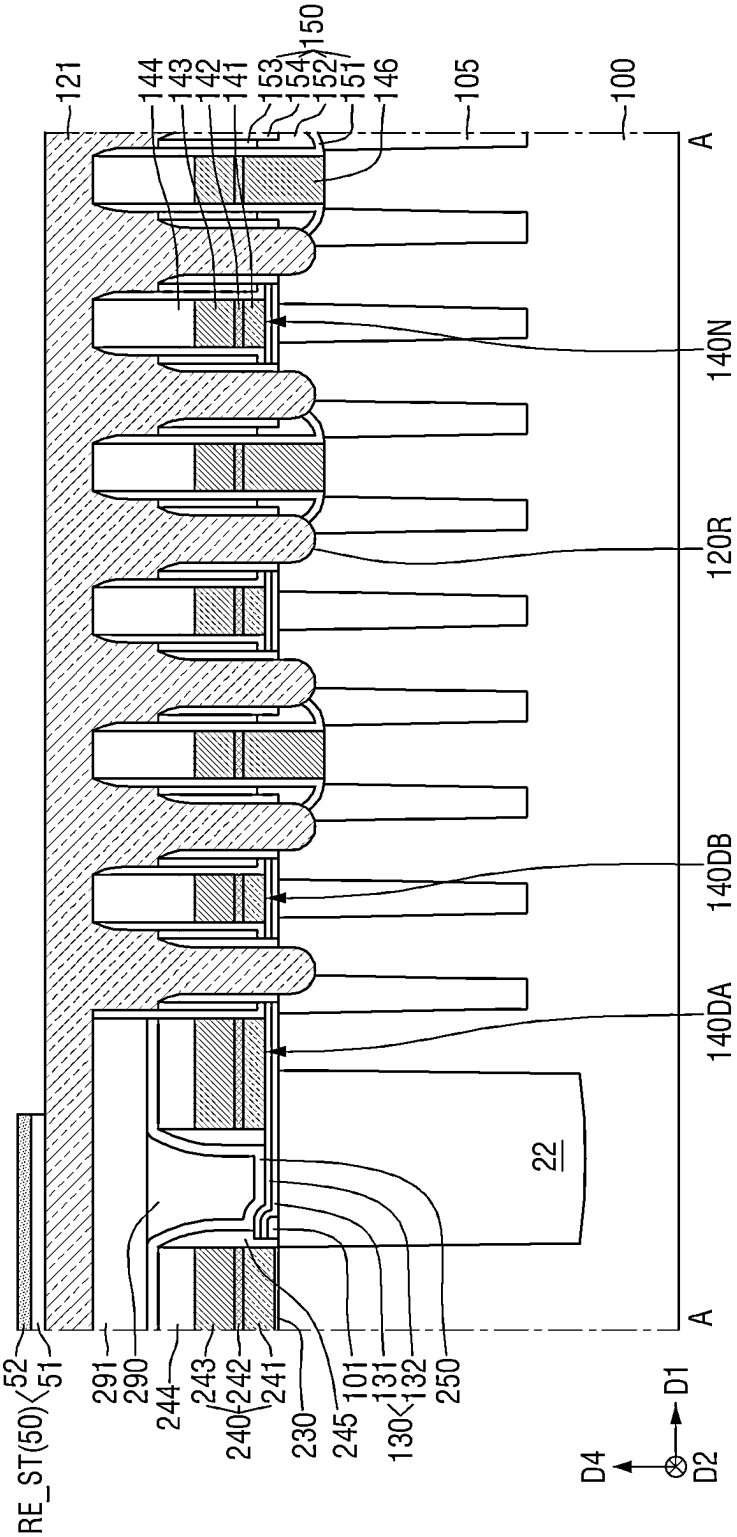
121
144
143
142
141
153
154
150
152
151
146
105
100
A
140N
120R
140DB
140DA
22
A
RE_ST(50)
52
51
291
290
244
243
240
242
241
230
245
101
131
130
132
250
D4
D2
D1

FIG. 18

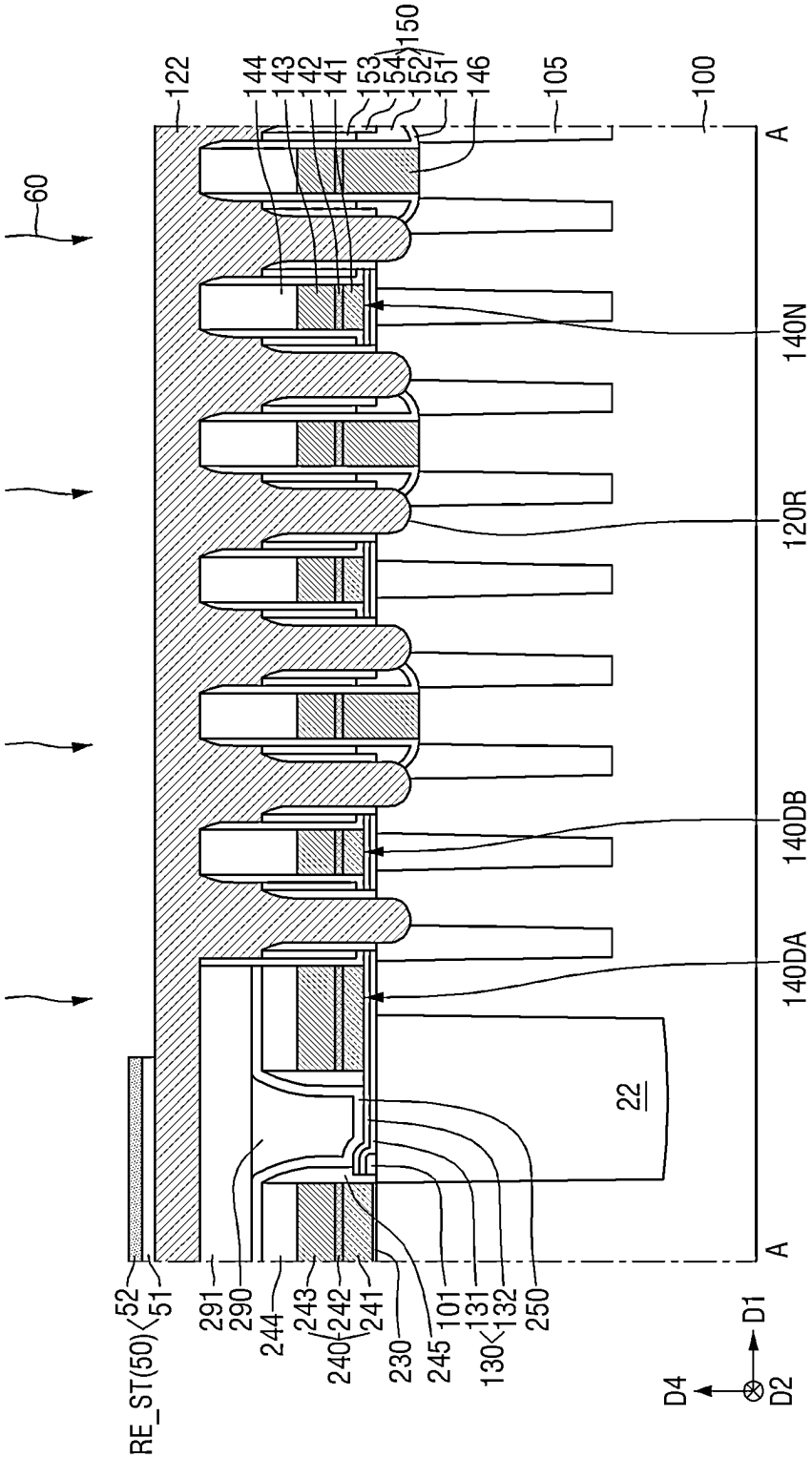
60
122
144
143
142
141
153
154
150
152
151
146
105
100
A
140N
120R
140DB
140DA
22
A
RE_ST(50)
52
51
291
290
244
243
240
242
241
230
245
101
131
130
132
250
D4
D2
D1

FIG. 19

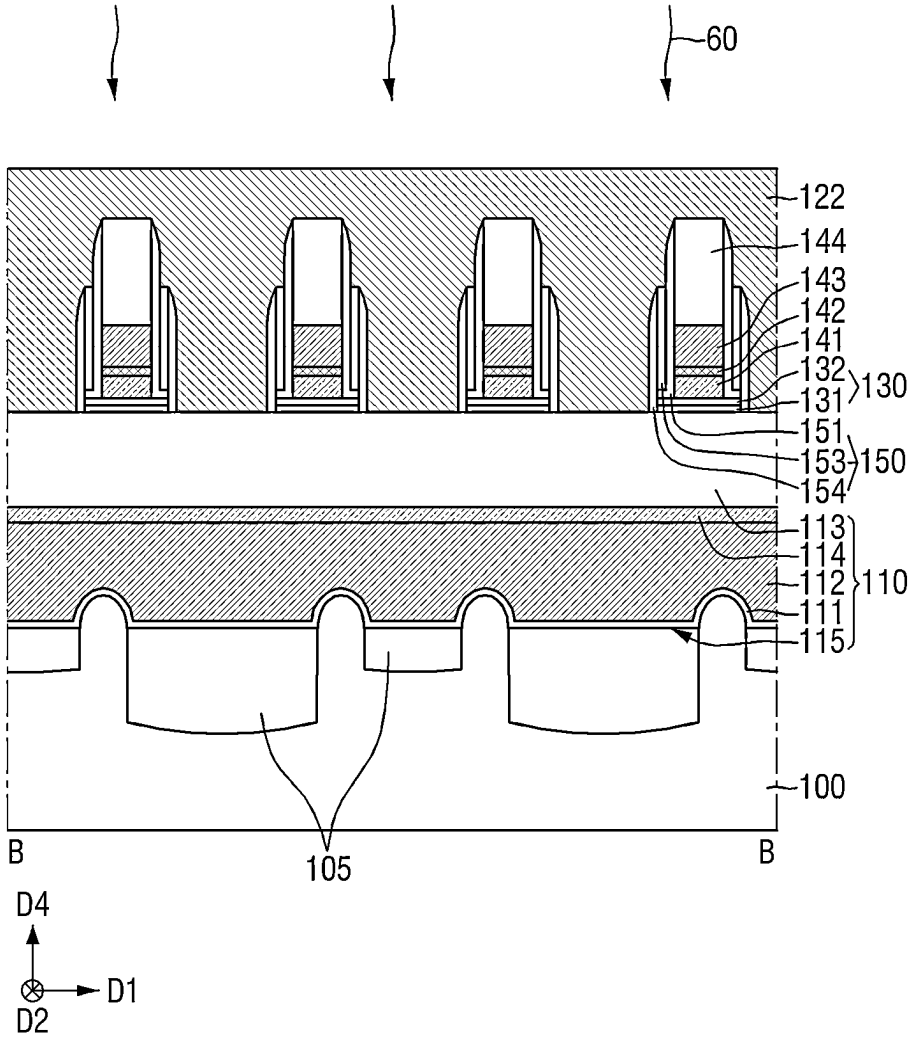
60
122
144
143
142
141
132
131
130
151
153
154
150
113
114
112
111
110
115
100
B
105
B
D4
D1
D2

FIG. 20

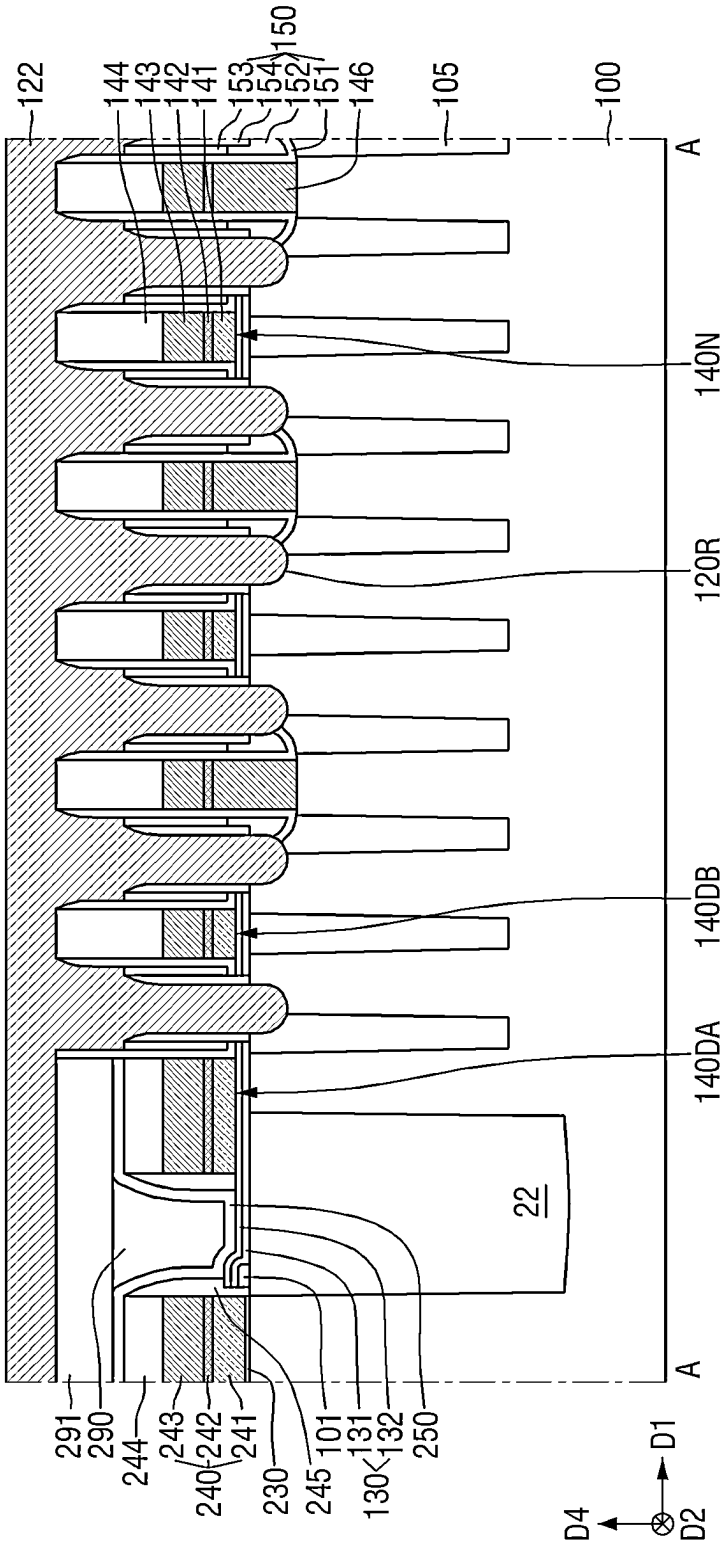
122
144
143
142
141
153
154
150
152
151
146
105
100
A
140N
120R
140DB
140DA
22
A
291
290
244
243
240
242
241
230
245
101
131
130
132
250
D4
D2
D1

FIG. 21

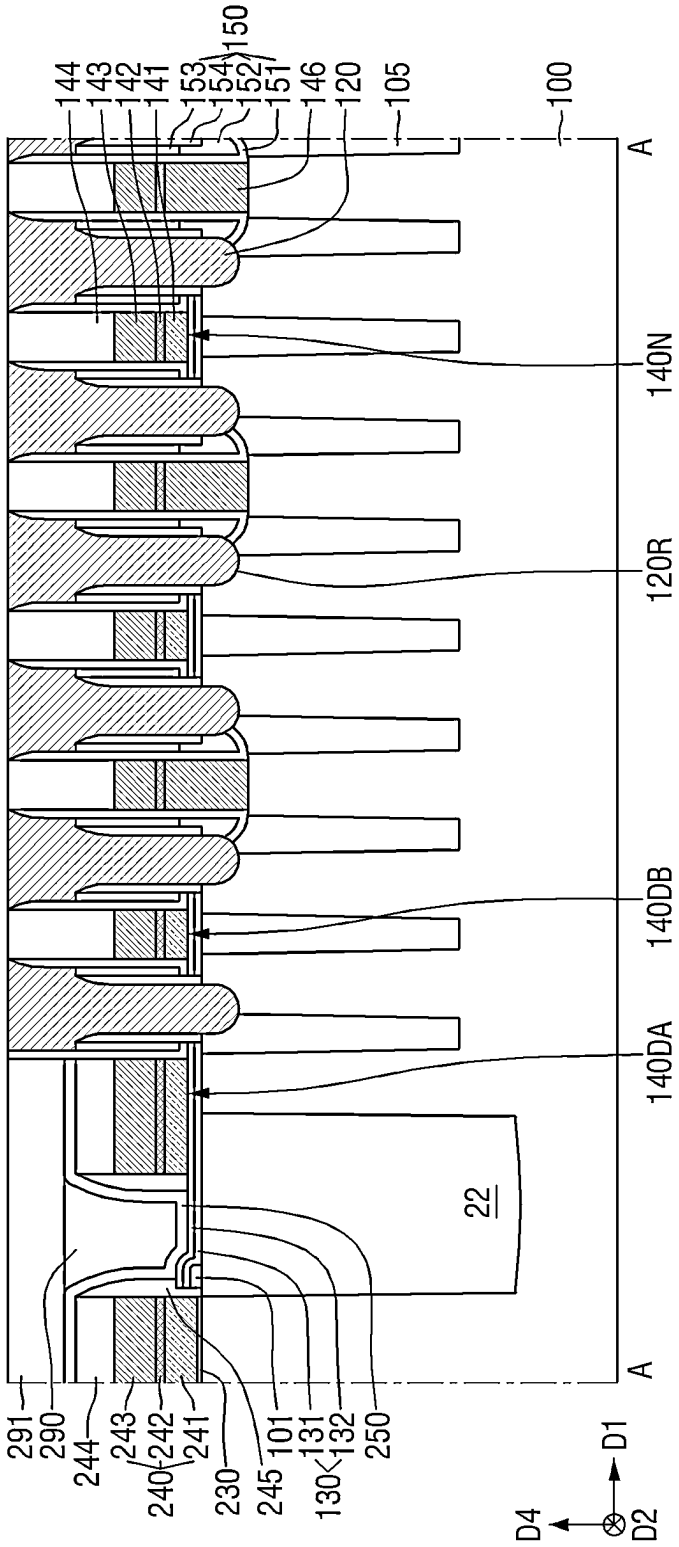
144
143
142
141
53
54
150
52
51
146
120
105
100
A
140N
120R
140DB
140DA
22
A
291
290
244
243
240
242
241
230
245
101
131
130
132
250
D4
D2
D1

FIG. 22

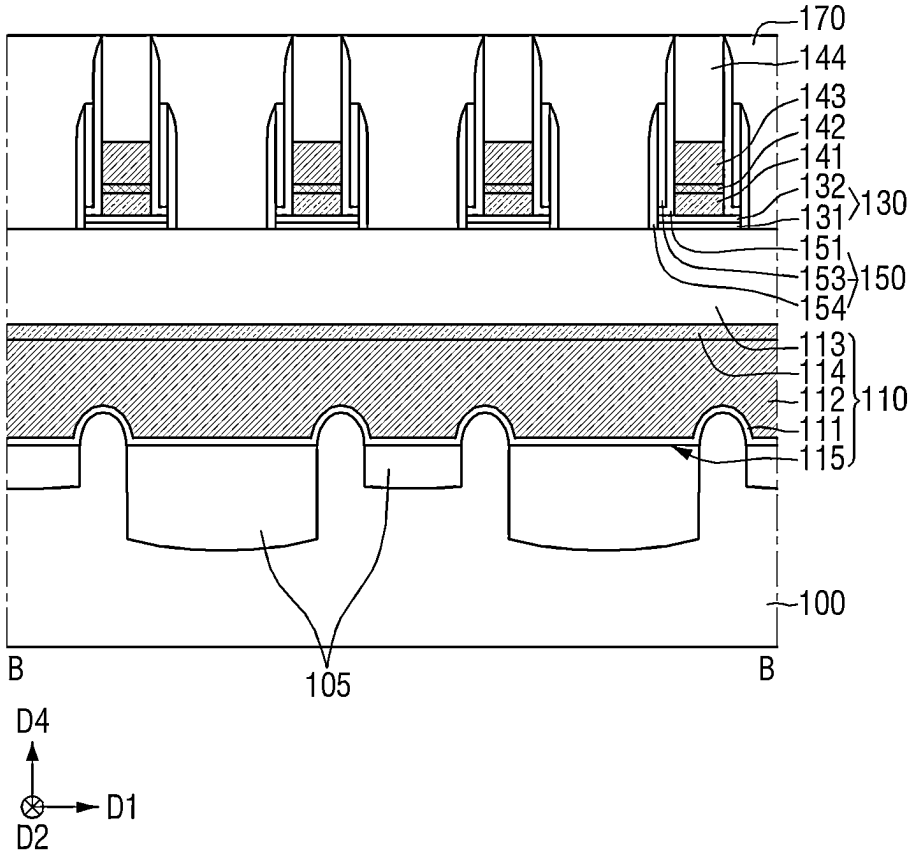
170
144
143
142
141
132
131
130
151
153
154
150
113
114
112
111
110
115
100
B
105
B
D4
D1
D2

FIG. 23

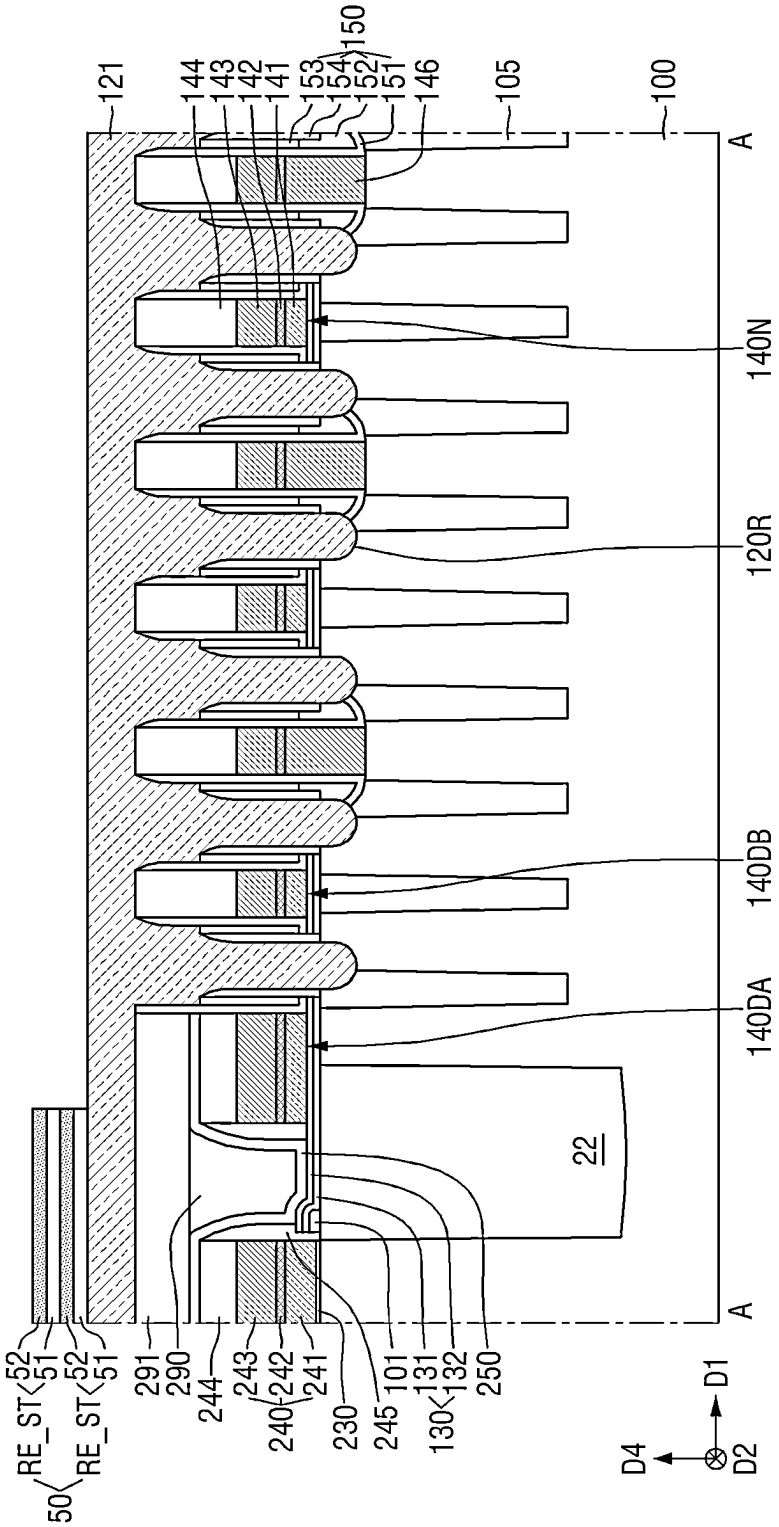
121
144
143
142
141
153
154
152
150
151
146
105
100
A
140N
120R
140DB
140DA
22
A
52
51
52
51
RE_ST
RE_ST
50
291
290
244
243
240
242
241
230
245
101
131
130
132
250
D4
D1
D2

FIG. 24

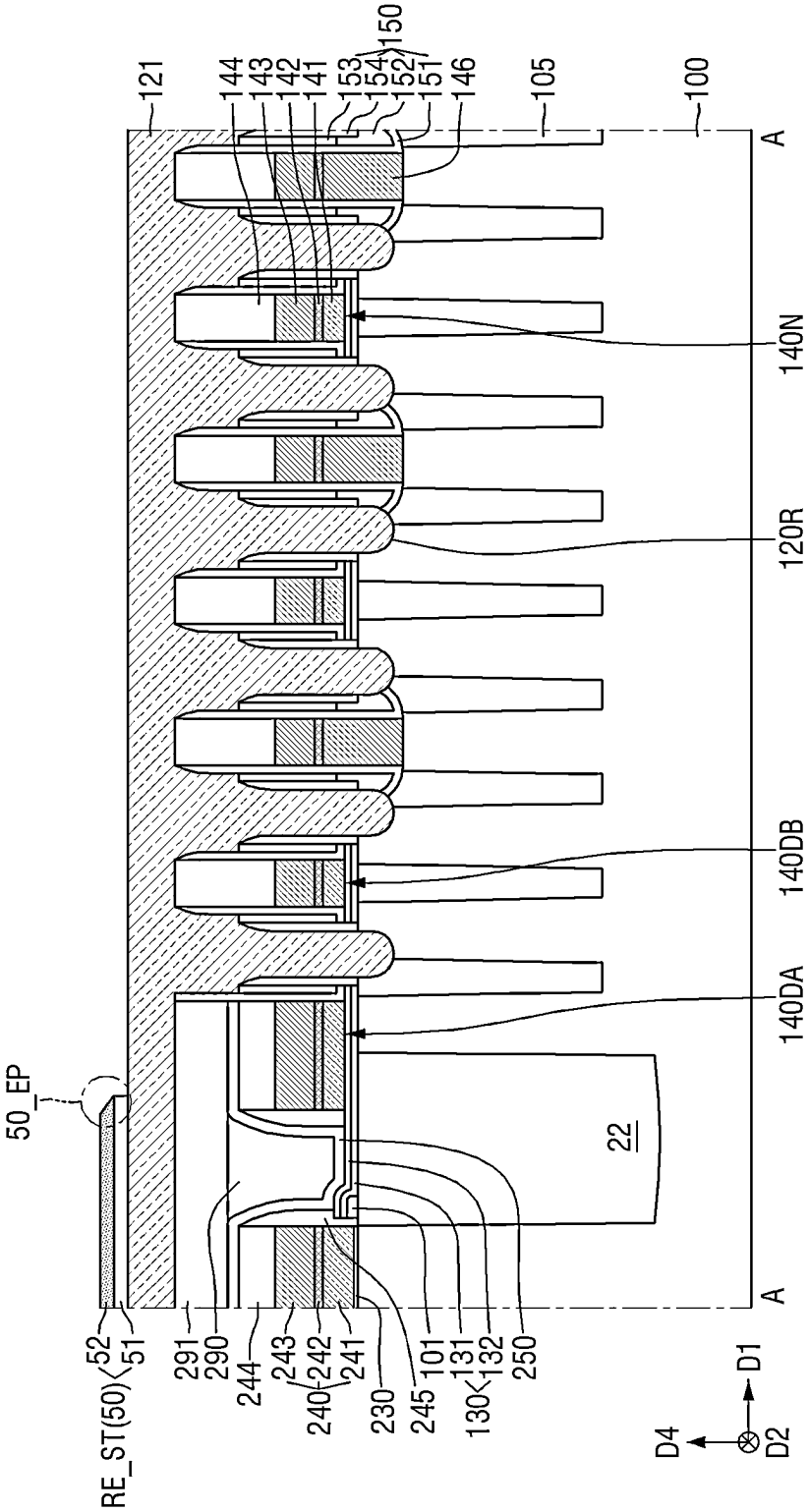
121
144
143
142
141
153
154
150
152
151
146
105
100
A
140N
120R
140DB
140DA
50_EP
22
A
52
51
RE_ST(50)
291
290
244
243
240
242
241
230
245
101
131
130
132
250
D4
D2
D1

FIG. 25

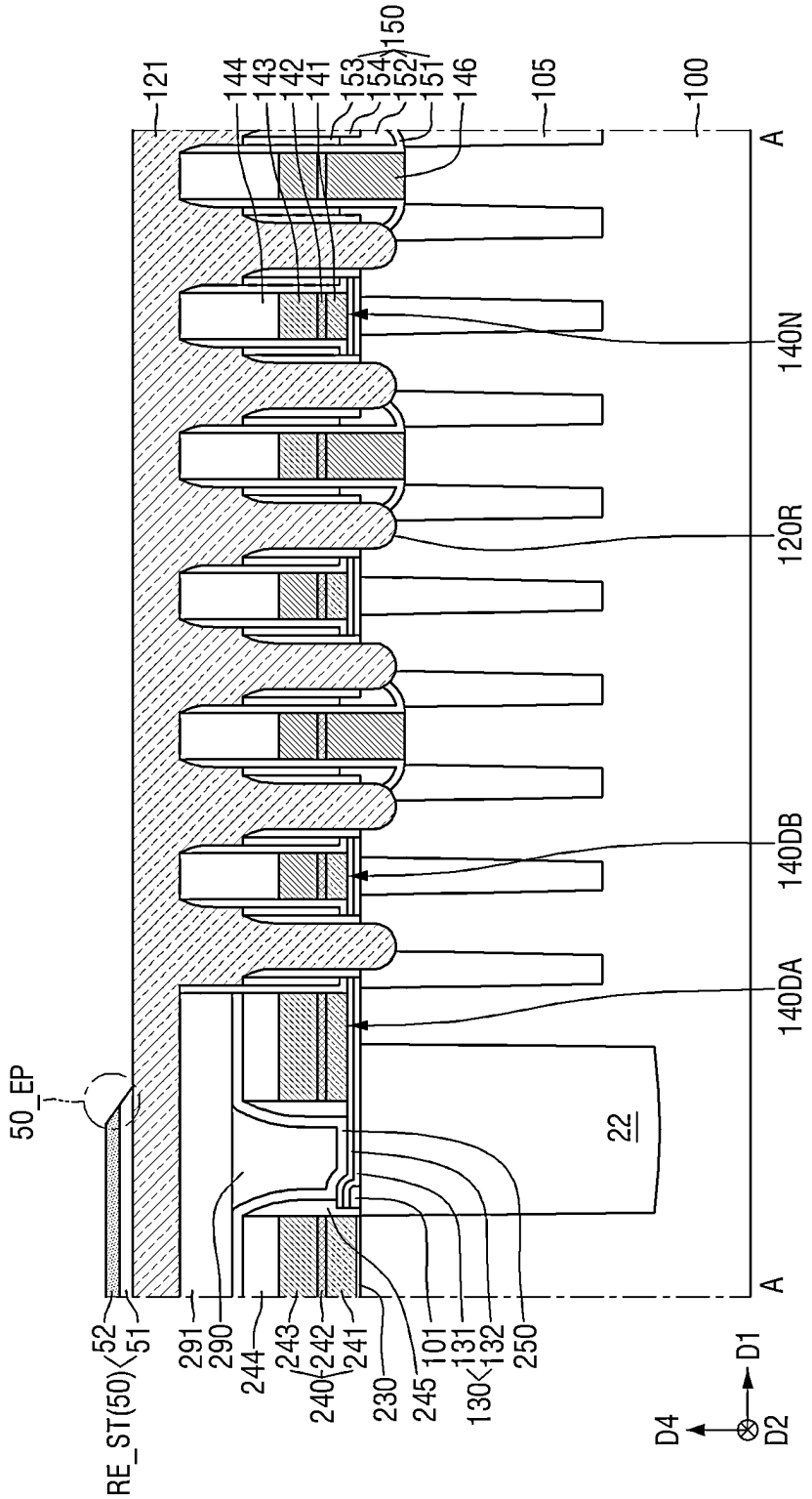
121
144
143
142
141
153
154
150
152
151
146
105
100
A
140N
120R
140DB
140DA
22
50_EP
52
51
RE_ST(50)
291
290
244
243
242
240
241
230
245
101
131
130
132
250
D4
D2
D1

FIG. 26

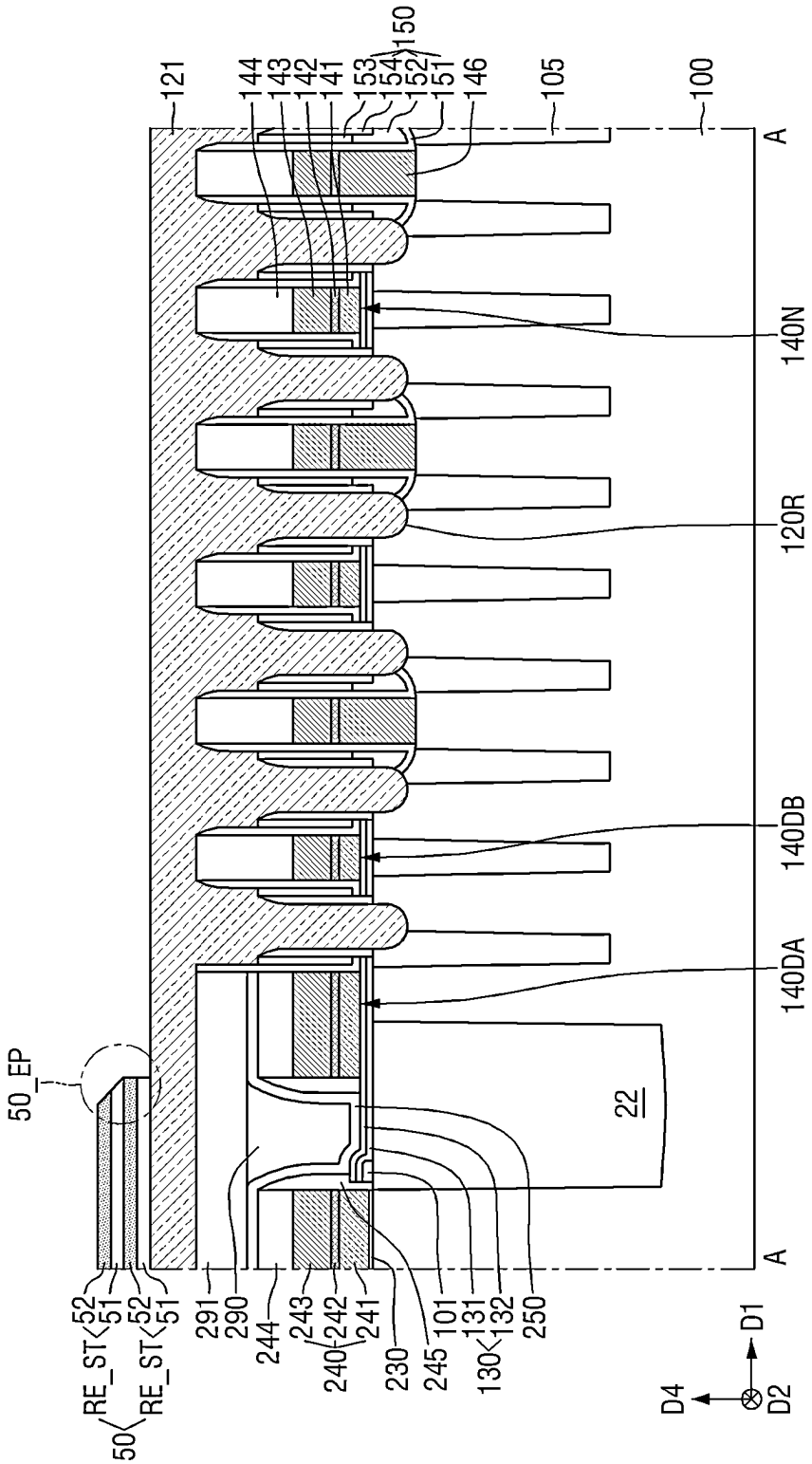
121
144
143
142
141
153
154
152
150
151
146
105
100
A
140N
120R
140DB
140DA
22
50_EP
52
51
52
51
RE_ST
RE_ST
50
291
290
244
243
240
242
241
230
245
101
131
130
132
250
A
D1
D2
D4

FIG. 27

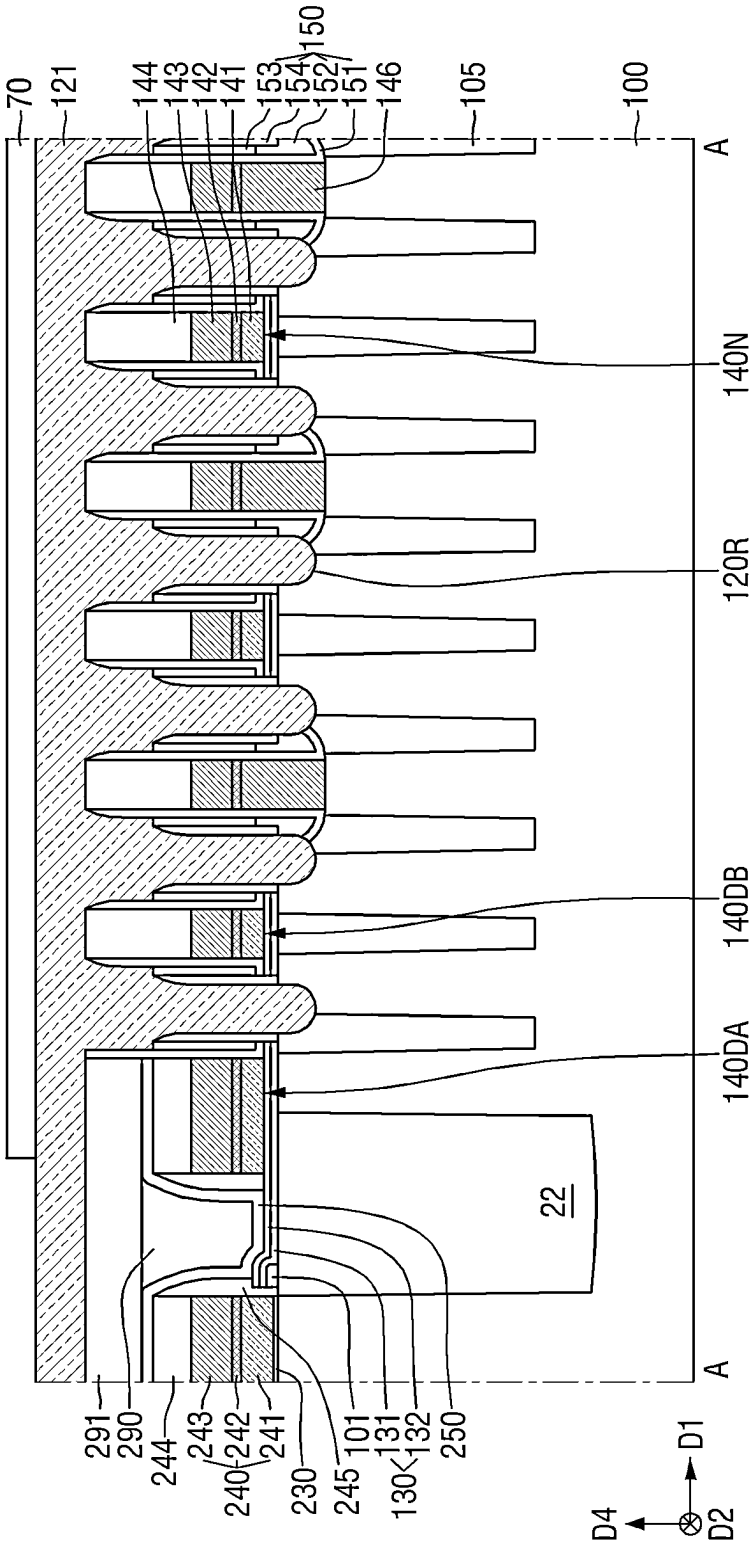
70
121
144
143
142
141
153
154
150
152
151
146
105
100
A
140N
120R
140DB
140DA
22
A
291
290
244
243
242
240
241
230
245
101
131
130
132
250
D4
D2
D1

FIG. 28

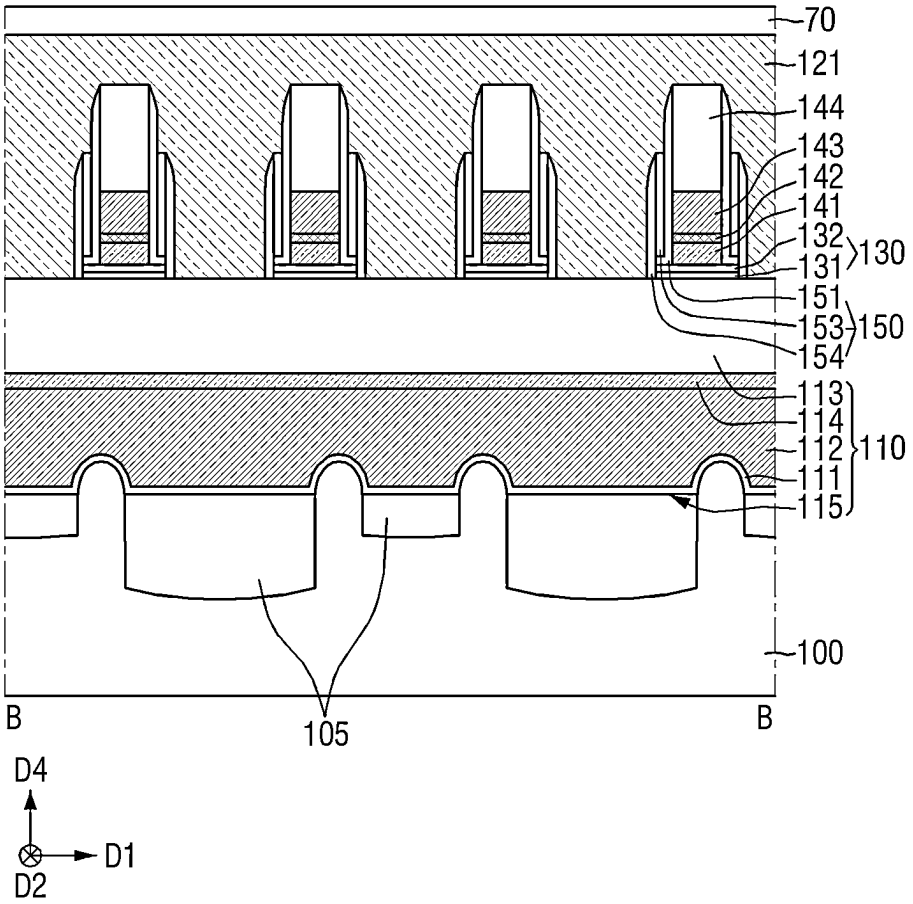
70
121
144
143
142
141
132
131
130
151
153
154
150
113
114
112
111
110
115
100
B
105
B
D4
D1
D2

FIG. 29

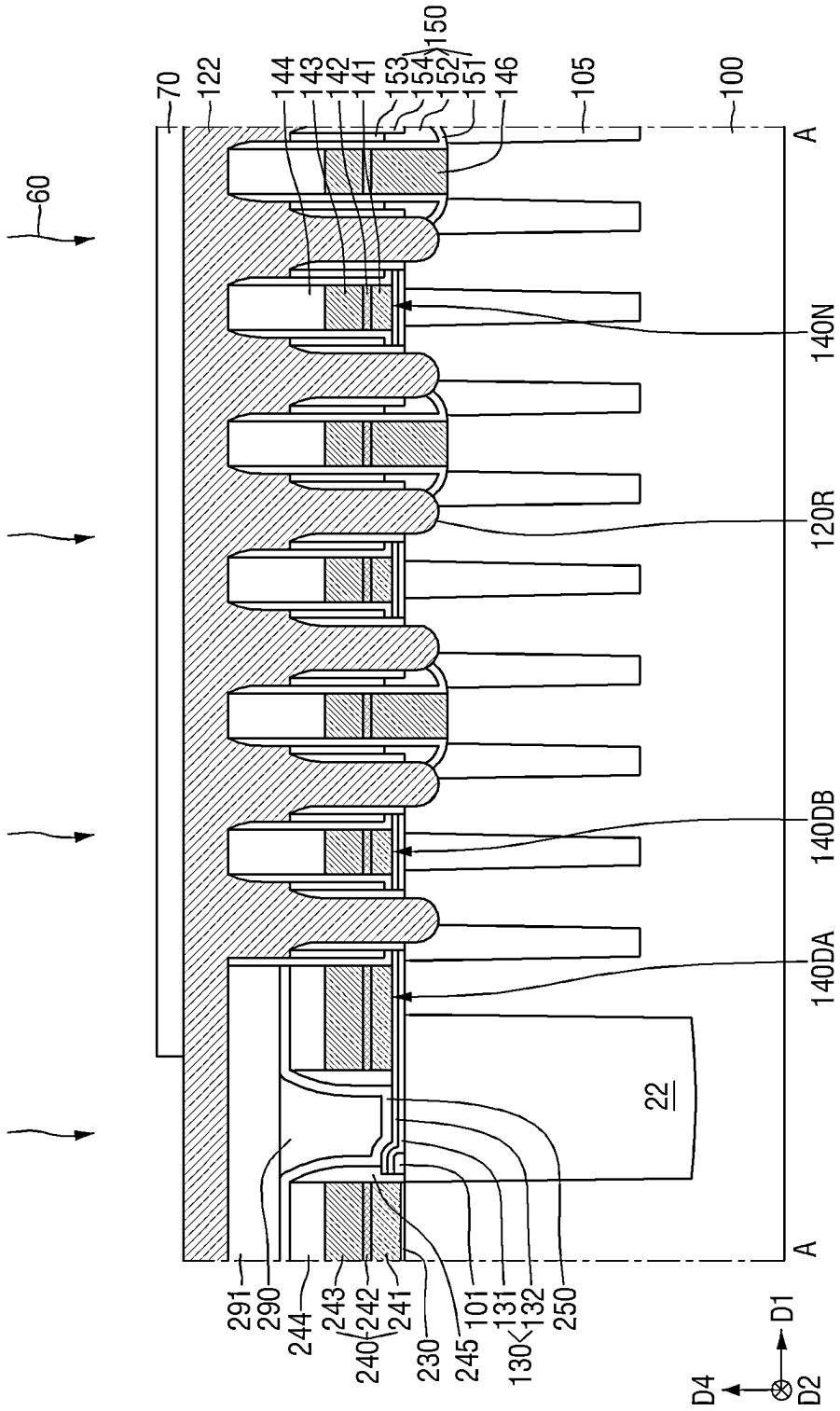
60
70
122
144
143
142
141
153
154
152
150
151
146
105
100
A
140N
120R
140DB
140DA
22
A
291
290
244
243
242
240
241
230
245
101
131
130
132
250
D4
D2
D1

FIG. 30

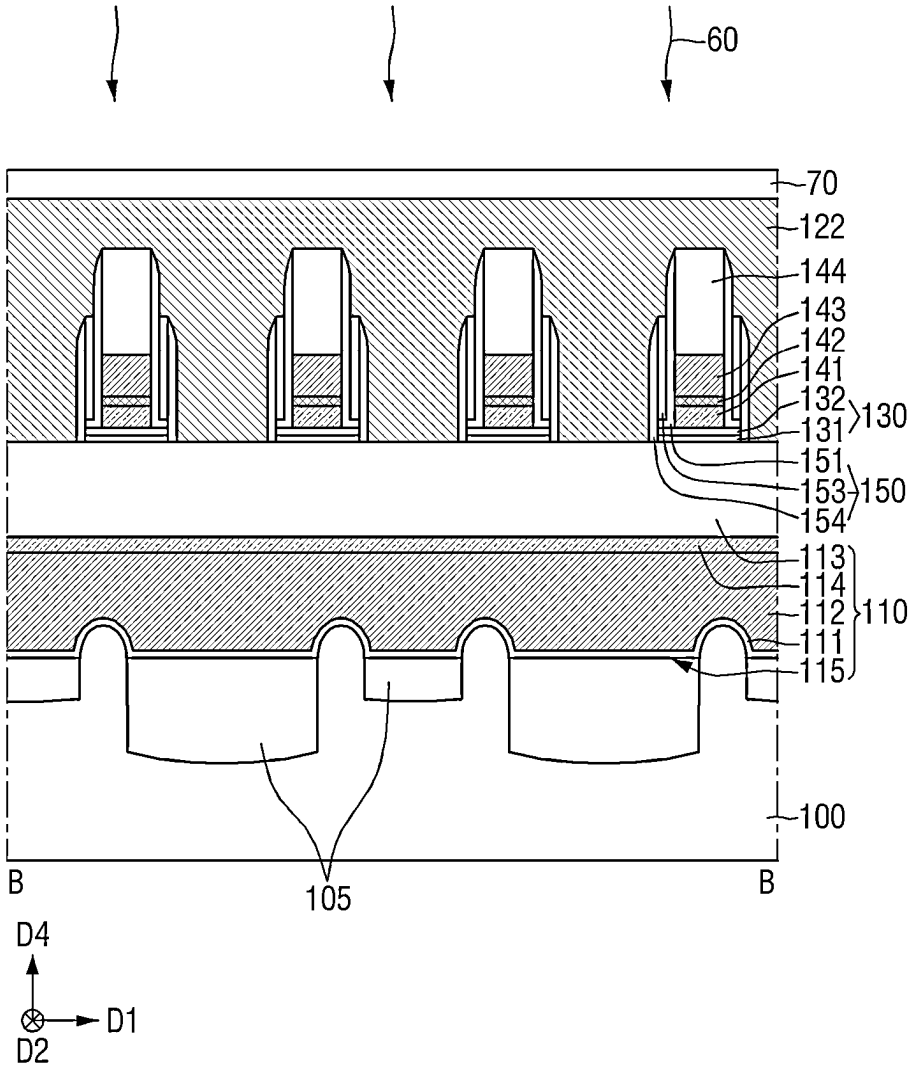
60
70
122
144
143
142
141
132
131
130
151
153
150
154
113
114
112
110
111
115
100
B
105
B
D4
D1
D2

FIG. 31

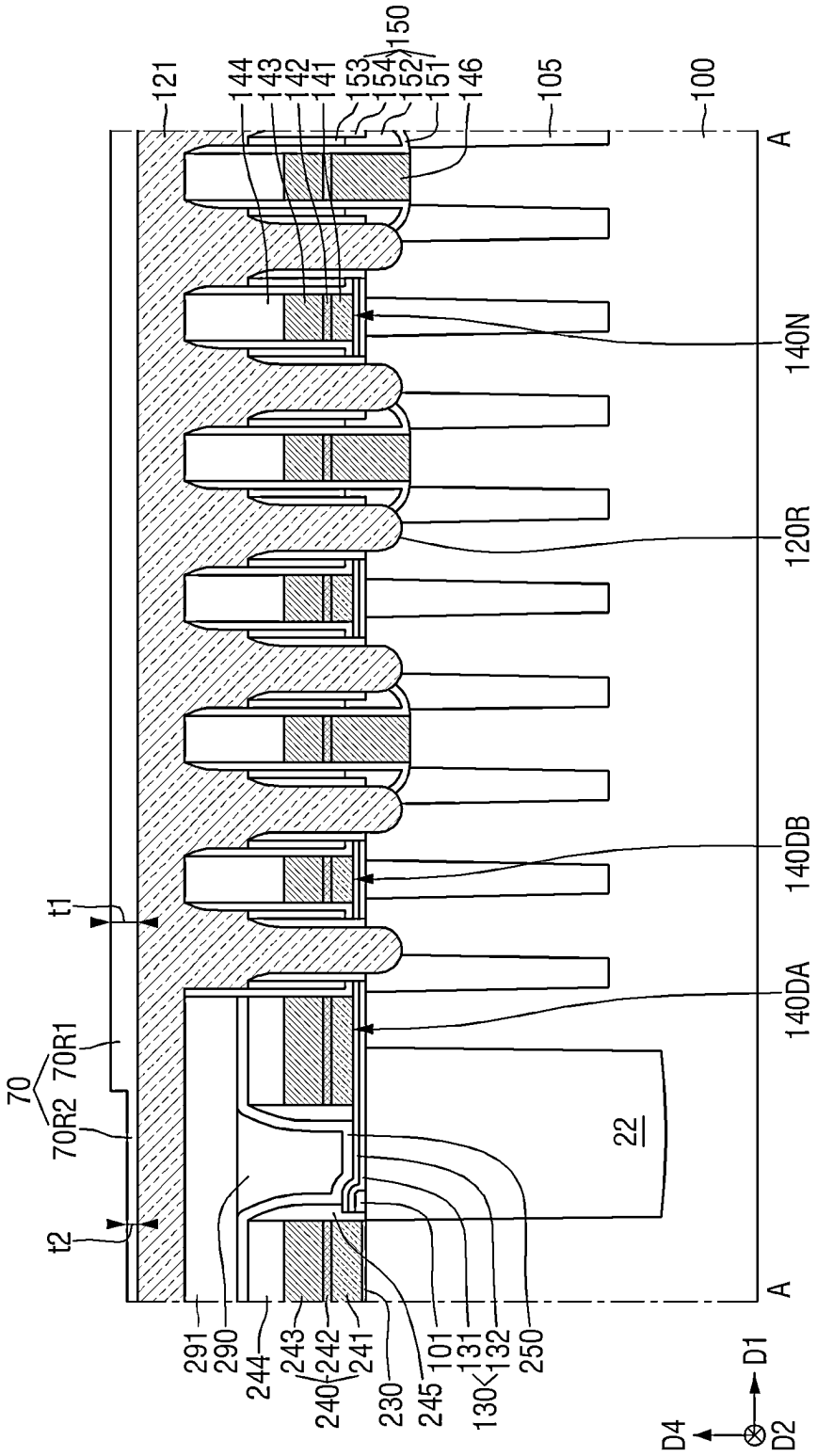
121
144
143
142
141
153
154
152
151
150
146
105
100
A
140N
120R
140DB
140DA
22
t1
70R1
70
70R2
t2
291
290
244
243
242
240
241
230
245
101
131
130
132
250
D4
D2
D1

FIG. 32

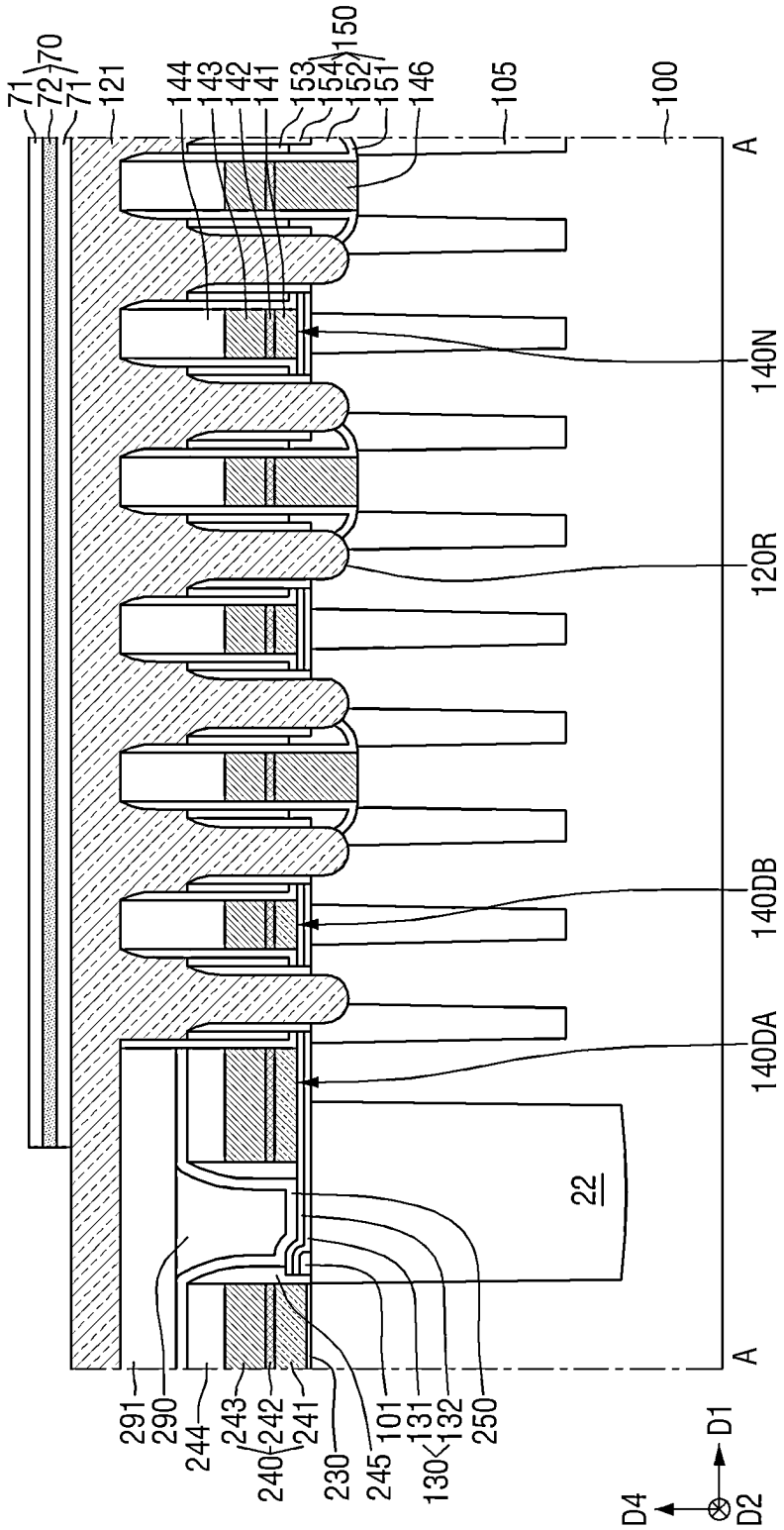
71
72
70
71
121
144
143
142
141
153
154
150
152
151
146
105
100
A
140N
120R
140DB
140DA
22
A
291
290
244
243
240
242
241
230
245
101
131
130
132
250
D4
D1
D2

FIG. 33

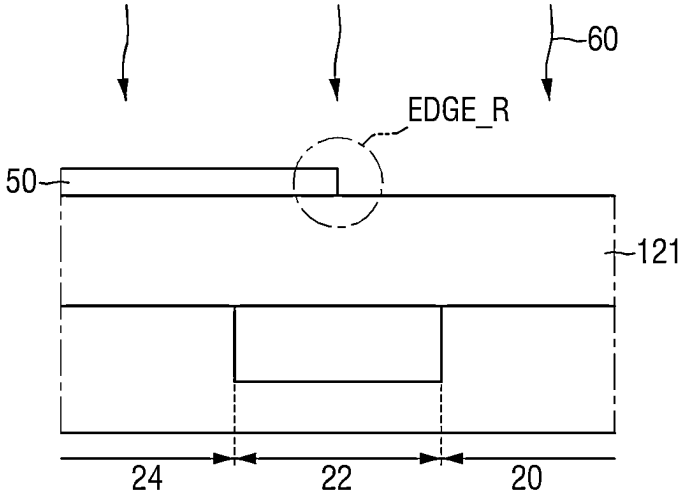

FIG. 34

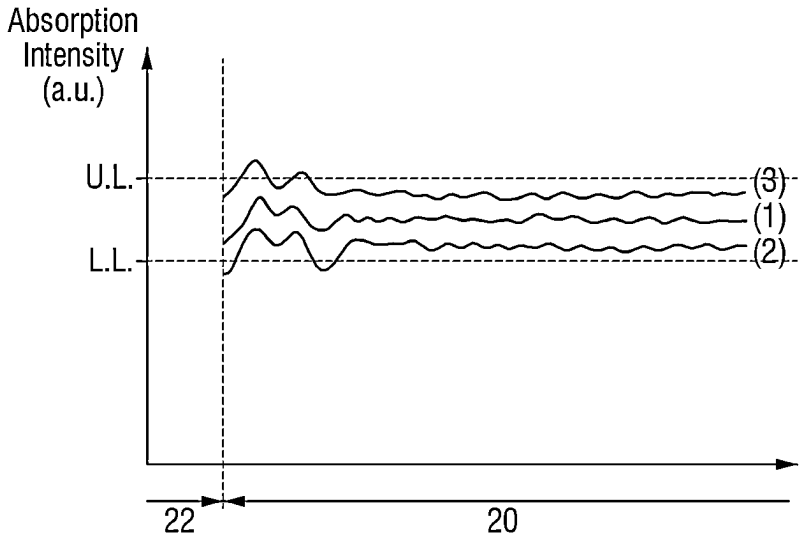

FIG. 35

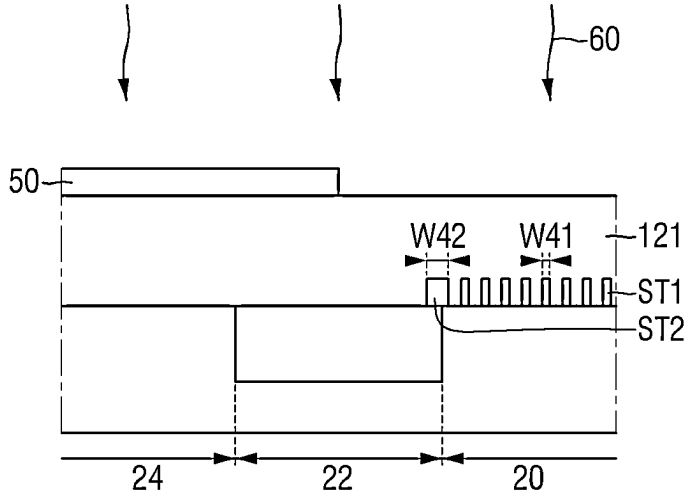

FIG. 36

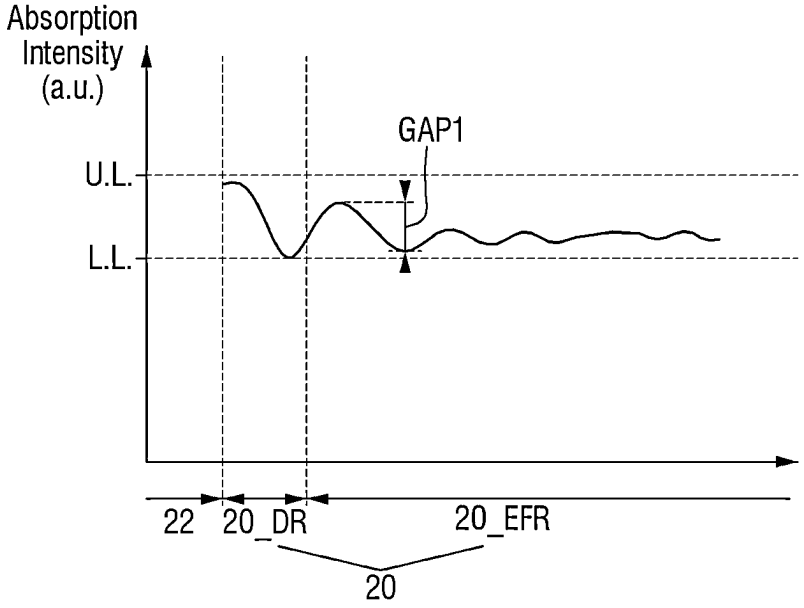

FIG. 37

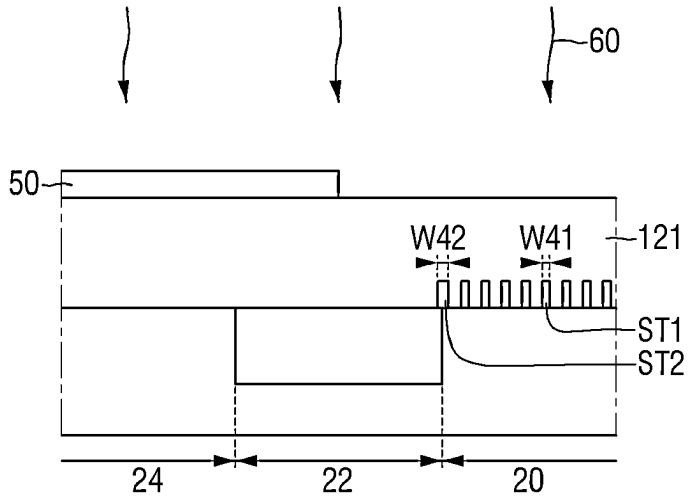

FIG. 38

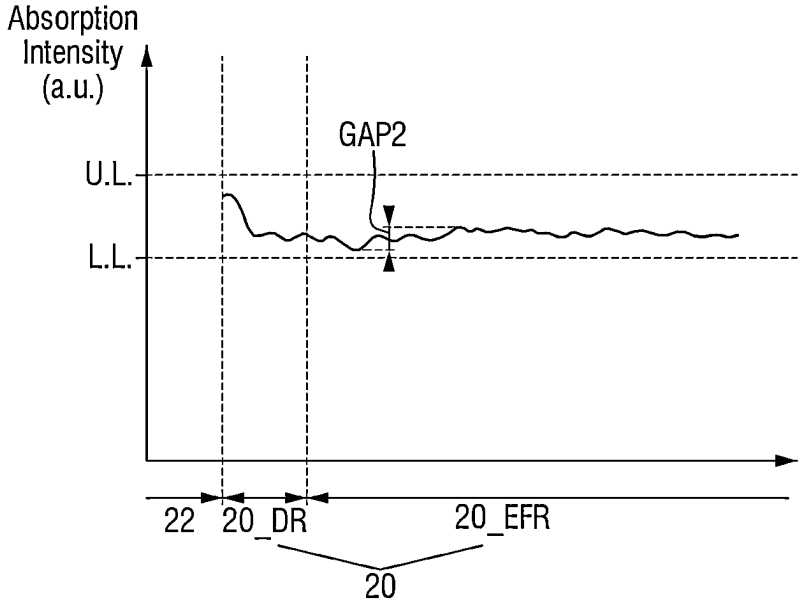

SEMICONDUCTOR MEMORY DEVICE AND METHOD FOR MANUFACTURING THE SAME

CROSS-REFERENCE TO RELATED APPLICATION

This application claims priority from Korean Patent Application No. 10-2021-0143385 filed on Oct. 26, 2021 in the Korean Intellectual Property Office, and all the benefits accruing therefrom under 35 U.S.C. § 119, the contents of which in its entirety are herein incorporated by reference.

BACKGROUND

Some example embodiments relate to a semiconductor memory device and/or a method for manufacturing the same, and more specifically, to a semiconductor memory device having a plurality of wire lines intersecting with each other and buried contacts, and/or a method for manufacturing the same.

A semiconductor device has an increasingly higher integration level. Thus, in order to implement more semiconductor elements in the same area, individual circuit patterns are increasingly made smaller. For example, as the integration level of the semiconductor memory device increases, a design rule for components of the semiconductor memory device is decreasing.

In a highly scaled semiconductor device, a process of forming a plurality of wire lines and a plurality of buried contacts (BC) interposed between the lines is becoming increasingly complex and/or difficult.

SUMMARY

Some example embodiments provide a semiconductor memory device that may have improved reliability and/or performance.

Alternatively or additionally, some example embodiments provide a method for manufacturing a semiconductor memory device that may have improved reliability and/or performance

Example embodiments are not limited to the above-mentioned purpose. Other purposes and advantages in accordance with various example embodiments as not mentioned above may be understood from following descriptions and more clearly understood from example embodiments in accordance with inventive concepts. Further, it will be readily appreciated that the purposes and/or advantages in accordance with various example embodiments may be realized by features and combinations thereof as disclosed in the claims.

According to some example embodiments, there is provided a semiconductor memory device comprising a substrate having a cell area and a peripheral area defined along a periphery of the cell area, wherein the cell area includes an active area defined by a cell element separation film, a cell area separation film in the substrate and defining the cell area, and a plurality of storage contacts connected to the active area, and arranged along a first direction, wherein the plurality of storage contacts includes a first storage contact, a second storage contact, and a third storage contact, wherein the second storage contact is between the first storage contact and the third storage contact, each of the first storage contact and the third storage contact defines an airgap, and the second storage contact does not define or surround an airgap.

Alternatively or additionally, there is provided a semiconductor memory device comprising a substrate having a cell area and a peripheral area defined along a periphery of the cell area, wherein the cell area includes an active area defined by a cell element separation film, a cell area separation film in the substrate and defining the cell area, a plurality of bit-line contacts connected to the active area and arranged along a first direction, and a bit-line disposed on the plurality of bit-line contacts, and extending in the first direction, wherein the plurality of bit-line contacts include a first bit-line contact, a second bit-line contact, and a third bit-line contact, wherein the second bit-line contact is between the first bit-line contact and the third bit-line contact, wherein an airgap is defined between the first bit-line contact and the bit-line, and between the third bit-line contact and the bit-line, and wherein no airgap is defined between the second bit-line contact and the bit-line.

Alternatively or additionally, there is provided a semiconductor memory device comprising a substrate having a cell area and a peripheral area defined along a periphery of the cell area, wherein the cell area includes an active area defined by a cell element separation film, a cell area separation film in the substrate and defining the cell area, a normal bit-line on the cell area and extending in a first direction, a group of dummy bit-lines disposed on the cell area and on one side of the normal bit-line, and a plurality of storage contacts connected to the active area and arranged along a second direction perpendicular to the first direction, wherein the group of dummy bit-lines includes a first dummy bit-line closest to the peripheral area in the second direction, and a second dummy bit-line closest to the first dummy bit-line in the second direction, wherein the first dummy bit-line extends in the first direction and has a first width in the second direction, the second dummy bit-line extends in the first direction and has a second width in the second direction, and a ratio of the first width to the second width is greater than or equal to 1 and is less than or equal to 2.

Alternatively or additionally, there is provided a method for manufacturing a semiconductor memory device comprising forming a cell area separation film and a cell element separation film in a substrate, wherein the cell area separation film separates a cell area and a peripheral area from each other, and the cell element separation film defines an active area in the cell area, forming a plurality of bit-lines on the cell area and extending in a first direction, wherein the bit-lines are spaced apart from each other in a second direction perpendicular to the first direction, forming a first semiconductor material film on the substrate so as to cover the plurality of bit-lines, forming a reflective film on the first semiconductor material film so as to overlap the peripheral area in a third direction, wherein the reflective film is includes an insulating material, and the third direction is perpendicular to the first direction and the second direction, performing a laser annealing process using the reflective film to recrystallize the first semiconductor material film to form a second semiconductor material film, and after removing the reflective film, patterning the second semiconductor material film to form a storage contact connected to the active area, wherein at least a portion of the cell area do not overlap the reflective film in the third direction.

Alternatively or additionally, there is provided a method for manufacturing a semiconductor memory device comprising forming a cell area separation film and a cell element separation film in a substrate, wherein the cell area separation film separates a cell area and a peripheral area from each other, and the cell element separation film defines an active

area in the cell area, forming a plurality of bit-lines disposed on the cell area and extending in a first direction, wherein the bit-lines are spaced apart from each other in a second direction perpendicular to the first direction, forming a first semiconductor material film on the substrate so as to cover the plurality of bit-lines, forming an anti-reflective film on the first semiconductor material film so as to overlap the cell area in a third direction, wherein the anti-reflective film includes an insulating material, and the third direction is perpendicular to the first direction and the second direction, performing a laser annealing process using the anti-reflective film to recrystallize the first semiconductor material film to form a second semiconductor material film, and after removing the anti-reflective film, patterning the second semiconductor material film to form a storage contact connected to the active area.

BRIEF DESCRIPTION OF DRAWINGS

The above and other aspects and features of various example embodiments will become more apparent by describing in detail embodiments thereof with reference to the attached drawings, in which:

FIG. **1** is a schematic layout of a semiconductor memory device according to some example embodiments;

FIG. **2** is an enlarged schematic layout of a R**1** portion of FIG. **1**;

FIG. **3** is a layout showing only a word-line and an active area of FIG. **2**;

FIG. **4** is a schematic layout diagram of a R**2** area of FIG. **1**;

FIG. **5** is a schematic layout diagram of a R**3** area of FIG. **1**;

FIG. **6** is an example cross-sectional view taken along A-A of FIG. **4**;

FIG. **7** is an example cross-sectional view taken along B-B of FIG. **4**;

FIG. **8** is an example cross-sectional view taken along C-C of FIG. **5**;

FIG. **9** is an example cross-sectional view taken along D-D of FIG. **5**;

FIG. **10** and FIG. **11** are diagrams for illustrating a semiconductor memory device according to some example embodiments;

FIG. **12** is a diagram for illustrating a semiconductor memory device according to some example embodiments;

FIG. **13** is a diagram for illustrating a semiconductor memory device according to some example embodiments;

FIG. **14** is a diagram for illustrating a semiconductor memory device according to some example embodiments;

FIG. **15** to FIG. **22** are diagrams of intermediate steps for illustrating a semiconductor memory device manufacturing method according to some example embodiments;

FIG. **23** to FIG. **26** are diagrams for illustrating a semiconductor memory device manufacturing method according to some example embodiments;

FIG. **27** to FIG. **30** are diagrams of intermediate steps for illustrating a semiconductor memory device manufacturing method according to some example embodiments;

FIG. **31** and FIG. **32** are diagrams for illustrating a semiconductor memory device manufacturing method according to some example embodiments, respectively;

FIG. **33** and FIG. **34** are diagrams for illustrating edge diffraction;

FIG. **35** to FIG. **38** are diagrams to illustrate an effect of an arrangement of structures on the substrate on the intensity of laser energy absorbed by the semiconductor material film.

DETAILED DESCRIPTION OF VARIOUS EXAMPLE EMBODIMENTS

FIG. **1** is a schematic layout of a semiconductor memory device according to some example embodiments. FIG. **2** is an enlarged schematic layout of a R**1** portion of FIG. **1**. FIG. **3** is a layout showing only a word-line and an active area of FIG. **2**. FIG. **4** is a schematic layout diagram of a R**2** area of FIG. **1**. FIG. **5** is a schematic layout diagram of a R**3** area of FIG. **1**. FIG. **6** is an example cross-sectional view taken along A-A of FIG. **4**. FIG. **7** is an example cross-sectional view taken along B-B of FIG. **4**. FIG. **8** is an example cross-sectional view taken along C-C of FIG. **5**. FIG. **9** is an example cross-sectional view taken along D-D of FIG. **5**.

In a diagram of a semiconductor memory device according to some example embodiments, a DRAM (Dynamic Random Access Memory) is illustrated by way of example. However, example embodiments are not limited thereto, and the semiconductor memory device may be or may include one or more other memory devices, such as but not limited to an FeRAM, a cross-point memory, a phase-change memory, a hysteresis memory, an SRAM, and/or another type of nonvolatile or volatile memory.

Referring to FIG. **1** to FIG. **5**, a semiconductor memory device according to some example embodiments may include a cell area **20**, a cell area separation film **22**, and a peripheral area **24**, each of which may be non-overlapping with one another.

The cell area separation film **22** may be formed along an outer edge of the cell area **20**. The cell area separation film **22** may separate the cell area **20** and the peripheral area **24** from each other. The peripheral area **24** may be defined as a periphery around the cell area **20**.

The cell area **20** may include a plurality of cell active areas ACT. The cell active area ACT may be defined by a cell element separation film (**105** in FIG. **5** to FIG. **9**) formed in a substrate (**100** in FIG. **4**). As the design rule of the semiconductor memory device decreases, the cell active area ACT may have a bar shape extending in a diagonal line and/or an oblique line as shown in FIG. **2**. For example, the cell active area ACT may extend in a third direction D**3**. The third direction D**3** may intersect a first direction D**1** at an angle that is less than ninety degrees, for example at an angle of seventy degrees; however, example embodiments are not limited thereto.

Each of a plurality of gate electrodes may extend in the first direction D**1** and across the cell active area ACT. The plurality of gate electrodes may extend parallel to each other. Each of the plurality of gate electrodes may be for example, each of a plurality of word-lines WL. The word-lines WL may be spaced from each other by an equal spacing, e.g. at a constant pitch. A width of the word-line WL and/or a spacing between word-lines WL may be determined according to the design rule.

The word-line WL may extend to the cell area separation film **22**. A portion of the word-line WL may overlap the cell area separation film **22** in a fourth direction D**4**. The fourth direction D**4** may be perpendicular to a surface of the substrate **100**.

The two word-lines WLs extending in the first direction D**1** may allow each cell active area ACT or each island of active area ACT to be divided into three portions. The cell active area ACT may include storage connection areas **103***b*

and a bit-line connection area **103***a*. The bit-line connection area **103***a* may be located at a middle portion of the cell active area ACT, while the storage connection areas **103***b* may be located at ends of the cell active area ACT.

A plurality of bit-lines BL extending in a second direction D**2** perpendicular to the extension direction of the word-line WL may be disposed on the word-lines WL. The plurality of bit-line BL may extend parallel to each other. The bit-lines BL may be arranged to be spaced from each other by a same spacing, e.g. at a constant pitch that may be the same as, less than, or greater than a pitch separating adjacent word-lines WL. A width of the bit-line BL and/or a spacing between bit-lines BLs may be determined according to the design rule.

The bit-line BL may extend to the cell area separation film **22**. A portion of the bit-line BL may overlap the cell area separation film **22** in the fourth direction D**4**. The fourth direction D**4** may be orthogonal to the first direction D**1**, the second direction D**2**, and the third direction D**3**. The fourth direction D**4** may be a thickness direction of the substrate **100**.

The plurality of bit-lines BL may include a normal bit-line group BL_NG and a dummy bit-line group BL_DG. The dummy bit-line group BL_DG may be disposed at a boundary of the cell area **20**. The dummy bit-line group BL_DG may be disposed at the boundary of the cell area **20** extending in the second direction D**2**. Because the dummy bit-line groups BL_DG are respectively disposed at the boundaries of the cell area **20** extending in the second direction D**2**, the normal bit-line group BL_NG may be disposed between the dummy bit-line groups BL_DG. Bit-lines BL in the dummy bit-line group BL_DG may not be active, e.g. may not be electrically active, during operation of the semiconductor device.

The normal bit-line group BL_NG may include a plurality of normal bit-lines BL_N extending in the second direction D**2**. The normal bit-lines BL_N may be spaced apart from each other in the first direction D**1**. The normal bit-line BL_N may act as a bit-line used for operation of a memory cell included in the semiconductor memory device.

The dummy bit-line group BL_DG may include a plurality of dummy bit-lines BL_DA and BL_DB extending in the second direction D**2**. Each of the plurality of dummy bit-lines BL_DA and BL_DB may act as a bit-line that is not used for operation of the memory cell included in the semiconductor memory device. For example, because a voltage source and/or a current source is not connected to the plurality of dummy bit-lines BL_DA and BL_DB, each of the plurality of dummy bit-lines BL_DA and BL_DB may be in an electrically floating state.

The dummy bit-line group BL_DG may include an outermost dummy bit-line BL_DA that is closest to the peripheral area **24** in the first direction D**1**. The dummy bit-line group BL_DG may include an inner dummy bit-line BL_DB disposed between the outermost dummy bit-line BL_DA and the normal bit-line BL_N.

The outermost dummy bit-line BL_DA may extend in the second direction D**2** and in parallel with the inner dummy bit-line BL_DB. The outermost dummy bit-line BL_DA is spaced apart from the inner dummy bit-line BL_DB in the first direction D**1**. Although at least a portion of the outermost dummy bit-line BL_DA may overlap with the cell area separation film **22** in the first direction D**1**, example embodiments are not limited thereto.

The dummy bit-line group BL_DG may include, for example, at least one inner dummy bit-line BL_DB. In the semiconductor memory device according to some example embodiments, the dummy bit-line group BL_DG may include the outermost dummy bit-line BL_DA and two inner dummy bit-lines BL_DB.

A boundary peripheral gate PR_ST may extend in the second direction D**2** and in parallel with the outermost dummy bit-line BL_DA. The boundary peripheral gate PR_ST may be disposed at a boundary between the cell area separation film **22** and the peripheral area **24**. Unlike the drawings, in the semiconductor memory device according to some example embodiments, the boundary peripheral gate PR_ST may extend in the first direction D**1**. Further, the semiconductor memory device according to some example embodiments may not include the boundary peripheral gate PR_ST.

A semiconductor memory device according to some example embodiments may include various contact arrangements formed on the cell active area ACT. The various contact arrangements may include, for example, a digit-line contact or a direct contact DC, a buried contact BC, and a landing pad LP, etc.

In this connection, the direct contact DC may refer to a contact that electrically connects the cell active area ACT to the bit-line BL. The buried contact BC may refer to a contact connecting the cell active area ACT to a lower electrode (**191** in FIG. **6** and FIG. **9**) of a capacitor. In terms of an arrangement structure, a contact area between the buried contact BC and the cell active area ACT may be small. Accordingly, a conductive landing pad LP may be introduced to expand the contact area between the cell active area ACT and the buried contact BC, and to expand the contact area between the buried contact BC and the lower electrode (**191** in FIG. **6** and FIG. **9**) of the storage element or the capacitor.

The landing pad LP may be disposed between the cell active area ACT and the buried contact BC and may be disposed between the buried contact BC and the lower electrode (**191** in FIG. **6** and FIG. **9**) of the capacitor. In the semiconductor memory device according to some example embodiments, the landing pad LP may be disposed between the buried contact BC and the lower electrode of the capacitor. Expanding the contact area via the introduction of the landing pad LP may allow a contact resistance between the cell active area ACT and the lower electrode of the capacitor to be reduced.

The direct contact DC may be connected to the bit-line connection area **103***a*. The buried contact BC may be connected to the storage connection area **103***b*. As the buried contact BC is dispose in each of both opposing ends of the cell active area ACT, the landing pad LP may be disposed adjacent to each of both opposing ends of the cell active area ACT and partially overlap with the buried contact BC. For example, the buried contact BC may be formed to overlap the cell active area ACT and the cell element separation film (**105** in FIG. **5**) between adjacent word-lines WL and between adjacent bit-lines BL.

The word-line WL may be formed as a structure buried in the substrate **100**. The word-line WL may extend across the cell active area ACT between the direct contacts DC or between the buried contacts BC. As shown, two word-lines WL may extend through one cell active area ACT. As the cell active area ACT extends along the third direction D**3**, the extension direction of the word-line WL may have an angle smaller than 90 degrees with respective to the extension direction of the cell active area ACT.

The direct contacts DC and the buried contacts BC may be arranged in a symmetrical manner Accordingly, the direct contacts DC and the buried contacts BC may be arranged in

a straight line or colinearly along the first direction D**1** and the second direction D**2**. Unlike the direct contact DC and the buried contact BC, the landing pads LP may be arranged in a zigzag manner in the second direction D**2** which the bit-line BL extends. Further, the landing pads LP may overlap with the same portion of a side face of each bit-line BL in the first direction D**1** in which the word-line WL extends. For example, each of landing pads LP in a first line may overlap the left side face of a corresponding bit-line BL, while each of the landing pads LP in a second line may overlap with a right side face of the corresponding bit-line BL.

Referring to FIG. **1** to FIG. **9**, the semiconductor memory device according to some example embodiments may include a plurality of cell gate structures **110**, a plurality of cell conductive lines **140**N, **140**DA, and **140**DB, a plurality of storage pads **160**, an information storage element **190**, and a peripheral gate conductive film **240**.

The substrate **100** may include the cell area **20**, the cell area separation film **22**, and the peripheral area **24**. The substrate **100** may be or may include a silicon substrate or an SOI (silicon-on-insulator). Alternatively or additionally, the substrate **100** may be or may include one or more of silicon germanium, SGOI (silicon germanium on insulator), indium antimonide, lead tellurium compound, indium arsenic, indium phosphide, gallium arsenide or gallium antimonide. However, example embodiments are not limited thereto. The substrate **100** may be undoped or may be doped, e.g. may be doped with an impurity such as boron; however, example embodiments are not limited thereto.

The plurality of cell gate structures **110**, the plurality of cell conductive lines **140**N, **140**DA, and **140**DB, the plurality of storage pads **160**, and the information storage element **190** may be disposed in the cell area **20**. The peripheral gate structure **240** may be disposed in the peripheral area **24**.

A cell element separation film **105** may be formed in the substrate **100** and in the cell area **20**. The cell element separation film **105** may have shallow trench isolation (STI) structure with excellent element separation ability. The cell element separation film **105** may define the cell active area ACT within the cell area **20**. The cell active area ACT defined by the cell element separation film **105** may have an elongate island shape including a minor axis and a major axis as shown in FIG. **2** to FIG. **5**. The cell active area ACT may have a diagonally extension shape to have an angle of smaller than 90 degrees with respect to the extension direction of the word-line WL horizontally flush with the cell element separation film **105**. Further, the cell active area ACT may have a diagonally extension shape to have an angle of less than 90 degrees with respect to an extension direction of the bit-line BL formed on the cell element separation film **105**.

The cell area separation film **22** may have an STI structure. The cell area **20** may be defined by the cell area separation film **22**.

Each of the cell element separation film **105** and the cell area separation film **22** may include, for example, at least one of a silicon oxide film, a silicon nitride film, and a silicon oxynitride film. However, example embodiments are not limited thereto. In FIG. **6** to FIG. **9**, each of the cell element separation film **105** and the cell area separation film **22** is shown to be formed as a single insulating film. However, this is only for convenience of illustration. However, example embodiments are not limited thereto. Depending on a width of each of the cell element separation film **105** and/or the cell area separation film **22**, each of the cell element separation film **105** and the cell area separation film **22** may be formed as a single insulating film, or as a stack of a plurality of insulating films.

In FIG. **6** and FIG. **8**, an upper surface of the cell element separation film **105**, an upper surface of the substrate **100**, and an upper surface of the cell area separation film **22** are shown to be horizontally flush with each other. However, this is only for convenience of illustration, and example embodiments are not limited thereto.

The cell gate structure **110** may be formed in the substrate **100** and the cell element separation film **105**. The cell gate structure **110** may be formed along the cell element separation film **105** and the cell active area ACT defined by the cell element separation film **105**.

The cell gate structure **110** may include a cell gate trench **115** formed in the substrate **100** and the cell element separation film **105**, a cell gate insulating film **111**, a cell gate electrode **112**, a cell gate capping pattern **113**, and a cell gate capping conductive film **114**. In this connection, the cell gate electrode **112** may correspond to the row or word-line WL. Unlike a configuration as shown, the cell gate structure **110** may not include the cell gate capping conductive film **114**.

The cell gate insulating film **111** may extend along a side wall and a bottom surface of the cell gate trench **115**. The cell gate insulating film **111** may extend along a profile of at least a portion of the cell gate trench **115**. The cell gate insulating film **111** may include, for example, at least one of silicon oxide, silicon nitride, silicon oxynitride, or high dielectric constant materials having a higher dielectric constant than that of silicon oxide. The high dielectric constant material may include, for example, hafnium oxide, hafnium silicon oxide, hafnium aluminum oxide, lanthanum oxide, lanthanum aluminum oxide, zirconium oxide, zirconium silicon oxide, tantalum oxide, titanium oxide, barium strontium titanium oxide, barium titanium oxide, strontium titanium oxide, yttrium oxide, aluminum oxide, lead scandium tantalum oxide, lead zinc niobate, and combinations thereof.

The cell gate electrode **112** may be formed on the cell gate insulating film **111**. The cell gate electrode **112** may fill a portion of the cell gate trench **115**. The cell gate capping conductive film **114** may extend along an upper surface of the cell gate electrode **112**.

The cell gate electrode **112** may include at least one of metal, metal alloy, conductive metal carbonitride, conductive metal carbide, metal silicide, doped semiconductor material, conductive metal oxynitride, and conductive metal oxide. The cell gate electrode **112** may include at least one of for example, TiN, TaC, TaN, TiSiN, TaSiN, TaTiN, TiAlN, TaAlN, WN, Ru, TiAl, TiAlC—N, TiAlC, TiC, TaCN, W, Al, Cu, Co, Ti, Ta, Ni, Pt, Ni-Pt, Nb, NbN, NbC, Mo, MoN, MoC, WC, Rh, Pd, Ir, Ag, Au, Zn, V, RuTiN, TiSi, TaSi, NiSi, CoSi, IrOx, RuOx, and combinations thereof. However, example embodiments are not limited thereto. The cell gate capping conductive film **114** may include, for example, polysilicon and/or polysilicon germanium, and may be doped or undoped. However, example embodiments are not limited thereto.

The cell gate capping pattern **113** may be disposed on the cell gate electrode **112** and the cell gate capping conductive film **114**. The cell gate capping pattern **113** may fill a remaining portion of the cell gate trench **115** except for the cell gate electrode **112** and the cell gate capping conductive film **114**. The cell gate insulating film **111** is shown to extend along a side wall of the cell gate capping pattern **113**. However, example embodiments are not limited thereto. The cell gate capping pattern **113** may include, for example, at least one of silicon nitride SiN, silicon oxynitride SiON,

silicon oxide SiO_2, silicon carbonitride SiCN, silicon oxycarbonitride SiOCN, and combinations thereof.

Although not shown, an impurity doped area may be formed on at least one side of the cell gate structure **110**. The impurity doped area may act as a source/drain area and/or a lightly-doped drain area and/or a pocket area of the transistor. The impurity doped area may be formed in the storage connection area **103***b* and the bit-line connection area **103***a* of FIG. **3**.

The bit-line structure may include cell conductive lines **140**N, **140**DA, and **140**DB and a cell line capping film **144**. The cell conductive lines **140**N, **140**DA, and **140**DB may be formed on the substrate **100** including the cell gate structure **110**, and on the cell element separation film **105** formed in the substrate **100**. The cell conductive lines **140**N, **140**DA, and **140**DB may intersect a cell element separation film **105**, and the cell active area ACT defined by the cell element separation film **105**. The cell conductive lines **140**N, **140**DA, and **140**DB may be formed to intersect with the cell gate structure **110**. In this connection, the cell conductive lines **140**N, **140**DA, and **140**DB may correspond to the bit-lines BL.

The cell conductive lines **140**N, **140**DA, and **140**DB may include a normal cell conductive line **140**N and dummy cell conductive lines **140**DA and **140**DB. The dummy cell conductive lines **140**DA and **140**DB may include an outermost dummy cell conductive line **140**DA and an inner dummy cell conductive line **140**DB. The normal cell conductive line **140**N may correspond to the normal bit-line BL_N. The outermost dummy cell conductive line **140**DA may correspond to the outermost dummy bit-line BL_DA. The inner dummy cell conductive line **140**DB may correspond to the inner dummy bit-line BL_DB.

Each of or any of the cell conductive lines **140**N, **140**DA, and **140**DB may include a stack of multiple films. Each of the cell conductive lines **140**N, **140**DA, and **140**DB may include, for example, a first cell conductive film **141**, a second cell conductive film **142**, and a third cell conductive film **143**. The first to third cell conductive films **141**, **142**, and **143** may be sequentially stacked on the substrate **100** and the cell element separation film **105**. Although each of the cell conductive lines **140**N, **140**DA, and **140**DB is shown to be composed of the three films, example embodiments are not limited thereto.

Each of or any of the first to third cell conductive films **141**, **142**, and **143** may independently or collectively include, for example, at least one of a semiconductor material doped with impurities, a conductive silicide compound, a conductive metal nitride metal, and a metal alloy. For example, the first cell conductive film **141** may include a doped semiconductor material. The first cell conductive film **141** may be a semiconductor conductive line. The second cell conductive film **142** may include at least one of the conductive silicide compound and the conductive metal nitride. The third cell conductive film **143** may include at least one of metal and metal alloy. However, example embodiments are not limited thereto. Each of or either of the second and third cell conductive films **142** and **143** may be a metallic conductive line.

The outermost dummy cell conductive line **140**DA may have a first width W**1** in the first direction D**1**. The inner dummy cell conductive line **140**DB closest to the outermost dummy cell conductive line **140**DA may have a second width W**2** in the first direction D**1**. The normal cell conductive line **140**N may have a third width W**3** in the first direction D**1**.

In this connection, each of the width W**1** of the outermost dummy cell conductive line **140**DA, the width W**2** of the inner dummy cell conductive line **140**DB, and the width W**3** of the normal cell conductive line **140**N may be a width of a bottom surface of each of the cell conductive lines **140**N, **140**DA, and **140**DB. For example, the width W**1** of the outermost dummy cell conductive line **140**DA, the width W**2** of the inner dummy cell conductive line **140**DB, and the width W**3** of the normal cell conductive line **140**N may be a width of a bottom surface of the first cell conductive film **141** facing toward the substrate **100**.

For example, the width W**2** of the inner dummy cell conductive line **140**DB is the same as the width W**3** of the normal cell conductive line **140**N. In the semiconductor memory device according to some example embodiments, the width W**1** of the outermost dummy cell conductive line **140**DA is greater than the width W**2** of the inner dummy cell conductive line **140**DB.

A bit-line contact **146** may be formed between the cell conductive lines **140**N, **140**DA, and **140**DB and the substrate **100**. For example, the cell conductive lines **140**N, **140**DA, and **140**DB may be formed on the bit-line contact **146**. For example, the bit-line contact **146** may be formed at a point where each of the cell conductive lines **140**N, **140**DA, and **140**DB intersects a center portion of the cell active area ACT having an elongate island shape. The bit-line contact **146** may be formed between the bit-line connection area **103***a* of the cell active area ACT and the cell conductive lines **140**N, **140**DA, and **140**DB. The bit-line contact **146** may be connected to the bit-line connection area **103***a*.

The plurality of bit-line contacts **146** may extend along the second direction D**2**. Each of the cell conductive lines **140**N, **140**DA, and **140**DB may be disposed on the plurality of bit-line contacts **146** and extend along the second direction D**2**.

The bit-line contact **146** may electrically connect the cell conductive lines **140**N, **140**DA, and **140**DB to the substrate **100**. In this connection, the bit-line contact **146** may correspond to the direct contact DC. The bit-line contact **146** may include, for example, at least one of a semiconductor material doped with impurities such as boron and/or phosphorus and/or arsenic, a conductive silicide compound, a conductive metal nitride, and a metal. In the semiconductor memory device according to some example embodiments, the bit-line contact **146** may include a semiconductor material doped with impurities.

In FIG. **8** in which the normal cell conductive line **140**N is shown, in an area overlapping an upper surface **146**US of the bit-line contact, the normal cell conductive line **140**N may include the second cell conductive film **142** and the third cell conductive film **143**. In an area that does not overlap with the upper surface **146**US of the bit-line contact, the normal cell conductive line **140**N may include the first to third cell conductive films **141**, **142**, and **143**.

Although not shown, the dummy cell conductive line **140**DA and **140**DB may have the same structure as that of the normal cell conductive line **140**N.

The second cell conductive film **142** may extend along an upper surface **141**US of the first cell conductive film and an upper surface **146**US of the bit-line contact. A bottom surface **142**BS of the second cell conductive film may face toward the upper surface **141**US of the first cell conductive film and the upper surface **146**US of the bit-line contact.

The bottom surface **142**BS of the second cell conductive film may directly contact the upper surface **141**US of the first cell conductive film and the upper surface **146**US of the

bit-line contact. Based on an upper surface of the substrate **100**, a height of the bottom surface **142**BS of the second cell conductive film may be the same as a height of the upper surface **146**US of the bit-line contact. For example, based on an upper surface of the substrate **100**, a height of the upper surface **141**US of the first cell conductive film may be the same as the height of the upper surface **146**US of the bit-line contact.

The plurality of bit-line contacts **146** may include a first bit-line contact, a second bit-line contact and a third bit-line contact under one cell conductive line **140**N, **140**DA, or **140**DB. The first to third bit-line contacts may be sequentially arranged from the cell area separation film **22** in the second direction D**2**. The second bit-line contact may be disposed between the first bit-line contact and the third bit-line contact. In the semiconductor memory device according to some example embodiments, the bottom surface **142**BS of the second cell conductive film may directly contact an upper surface **146**US of the first bit-line contact, an upper surface **146**US of the second bit-line contact, and a upper surface **146**US of the third bit-line contact.

In FIG. **8**, it is illustrated that the bit-line contact **146** is not disposed between the substrate **100** and the normal cell conductive line **140**N closest to the cell area separation film **22**. Example embodiments are not limited thereto. Unlike the illustration, the bit-line contact **146** may be disposed between the substrate **100** and the normal cell conductive line **140**N closest to the cell area separation film **22**.

The cell line capping film **144** may be disposed on the cell conductive lines **140**N, **140**DA, and **140**DB. The cell line capping film **144** may extend in the second direction D**2** and along the upper surfaces of the cell conductive lines **140**N, **140**DA, and **140**DB. In this case, the cell line capping film **144** may include, for example, at least one of a silicon nitride, a silicon oxynitride, a silicon carbonitride, and a silicon oxycarbonitride. In the semiconductor memory device according to some example embodiments, the cell line capping film **144** may include, for example, a silicon nitride film. Although the cell line capping film **144** is shown to be a single film, example embodiments are not limited thereto.

A cell insulating film **130** may be formed on the substrate **100** and the cell element separation film **105**. For example, the cell insulating film **130** may be disposed on a portion of the substrate **100** and a portion of the cell element separation film **105** on which the bit-line contact **146** has not been formed. The cell insulating film **130** may be disposed between the substrate **100** and the cell conductive line **140** and between the cell element separation film **105** and the cell conductive lines **140**N, **140**DA, and **140**DB.

The cell insulating film **130** may be a single film. However, as illustrated, the cell insulating film **130** may be a stack of multi-films including the first cell insulating film **131** and the second cell insulating film **132**. For example, the first cell insulating film **131** may include a silicon oxide film, and the second cell insulating film **132** may include a silicon nitride film. Example embodiments are not limited thereto. Unlike the configuration as shown, the cell insulating film **130** may include three or more insulating films.

A cell buffer film **101** may be disposed between the cell insulating film **130** and the cell area separation film **22**. Although cell buffer film **101** may include, for example, a silicon oxide film, example embodiments are not limited thereto.

A cell line spacer **150** may be disposed on sidewalls of the cell conductive lines **140**N, **140**DA, and **140**DB, and the cell line capping film **144**. In portions of the cell conductive lines **140**N, **140**DA, and **140**DB where the bit-line contact **146** is formed, the cell line spacer **150** may be formed on the substrate **100** and the cell element separation film **105**. The cell line spacer **150** may be disposed on sidewalls of the cell conductive lines **140**N, **140**DA, and **140**DB, the cell line capping film **144** and the bit-line contact **146**.

In remaining portions of the cell conductive lines **140**N, **140**DA, and **140**DB where the bit-line contact **146** is not formed, the cell line spacer **150** may be disposed on the cell insulating film **130**. The cell line spacer **150** may be disposed on the sidewalls of the cell conductive lines **140**N, **140**DA, and **140**DB, and the cell line capping film **144**.

The cell line spacer **150** may be a single layer. However, as illustrated, the cell line spacer **150** may be a stack of multi-films including the first to fourth cell line spacers **151**, **152**, **153**, and **154**. For example, each of or any of the first to fourth cell line spacers **151**, **152**, **153**, and **154** may include one of a silicon oxide film, a silicon nitride film, a silicon oxynitride film (SiON), a silicon oxycarbonitride film (SiOCN), air, and combinations thereof. However, example embodiments are not limited thereto.

For example, the second cell line spacer **152** may not be disposed on the cell insulating film **130**, but may be disposed on a sidewall of the bit-line contact **146**. The cell line spacer **150** may be disposed on a long sidewall extending in the second direction D**2** among sidewalls of the cell conductive lines **140**N, **140**DA, and **140**DB.

A fence pattern **170** may be disposed on the substrate **100** and the cell element separation film **105**. The fence pattern **170** may be formed to overlap the cell gate structure **110** formed in the substrate **100** and the cell element separation film **105**. The fence pattern **170** may be disposed between the cell conductive lines **140**N, **140**DA, and **140**DB extending in the second direction D**2**. The fence pattern **170** may include, for example, at least one of silicon oxide, silicon nitride, silicon oxynitride, and a combination thereof.

A plurality of storage contacts **120** may be disposed between the cell conductive lines **140**N, **140**DA, and **140**DB adjacent to each other in the first direction D**1**. The storage contact **120** may be disposed between the fence patterns **170** adjacent to each other in the second direction D**2**. The storage contact **120** may overlap portions of the substrate **100** and the cell element separation film **105** between the adjacent cell conductive lines **140**N, **140**DA, and **140**DB. The storage contact **120** may be connected to the storage connection area **103***b* of the cell active area ACT. In this connection, the storage contact **120** may correspond to the buried contact BC.

The plurality of storage contacts **120** may be arranged along, e.g. colinear along the first direction D**1**. For example, the plurality of storage contacts **120** may include a first storage contact, a second storage contact, and a third storage contact. The first storage contact, the second storage contact, and the third storage contact may be sequentially arranged from the cell area separation film **22** and in the first direction D**1**. The second storage contact may be disposed between the first storage contact and the third storage contact.

In the semiconductor memory device according to some example embodiments, each of the first storage contact and the third storage contact may include or define or surround or contain therein a first airgap AG_BC. The second storage contact does not include or define or surround or contain therein an airgap. Between the first storage contact including the first airgap AG_BC and the third storage contact including the first airgap AG_BC, the second storage contact not including an airgap may be disposed. The first airgap AG_BC may be under vacuum, and/or may include air such

as but not limited to clean, dry air and/or air including a noble gas such as argon; however, example embodiments are not limited thereto. The first airgap AG_BC may be a void, or a seam, within the first through third storage contacts.

The storage contacts **120** including the first airgap AG_BC may be arranged in a discrete manner For example, the storage contacts **120** including the first airgap AG_BC may be arranged to be spaced from each other by a regular spacing. However, example embodiments are not limited thereto.

It is shown that two second storage contacts that do not include the first airgap AG_BC are disposed between the first storage contacts including the first airgap AG_BC and the third storage contacts including the first airgap AG_BC. However, this is only for convenience of the description. Example embodiments are not limited thereto.

The cell area **20** may include a central area and an edge area. The edge area of the cell area **20** may be defined around the central area of the cell area **20**. The storage contact **120** located in the central area of the cell area **20** does not include the first airgap AG_BC. Some of the storage contacts **120** disposed in the edge area of the cell area **20** may include the first airgap AG_BC. Due to edge diffraction phenomenon as described in more detail below with reference to FIG. **33** and FIG. **34**, the first airgap AG_BC included in the storage contact **120** may be formed.

The storage contact **120** may include, for example, at least one of a semiconductor material such as polysilicon doped with impurities such as at least one of phosphorus, arsenic, or boron, a conductive silicide compound, a conductive metal nitride, and a metal. In the semiconductor memory device according to some example embodiments, the storage contact **120** may include a semiconductor material doped with impurities.

The storage pad **160** may be disposed on each of the storage contacts **120**. The storage pad **160** may be electrically connected to the storage contact **120**. The storage pad **160** may be connected to the storage connection area **103***b* of the cell active area ACT. In this connection, the storage pad **160** may correspond to the landing pad LP.

The storage pad **160** may overlap a portion of an upper surface of each of the cell conductive lines **140**N, **140**DA, and **140**DB. The storage pad **160** may include, for example, at least one of a semiconductor material doped with impurities, a conductive silicide compound, a conductive metal nitride, a conductive metal carbide, a metal, and a metal alloy.

A pad separation insulating film **180** may be formed on the storage pad **160** and the cell conductive lines **140**N, **140**DA, and **140**DB. For example, the pad separation insulating film **180** may be disposed on the cell line capping film **144**. The pad separation insulating film **180** may separate the storage pads **160** constituting or included in a plurality of isolated areas from each other. The pad separation insulating film **180** may not cover an upper surface **160**US of the storage pad. The pad separation insulating film **180** may fill a pad separation recess. The pad separation recess may separate adjacent storage pads **160** from each other.

The pad separation insulating film **180** may include an insulating material, and may electrically separate the plurality of storage pads **160** from each other. For example, the pad separation insulating film **180** may include, for example, at least one of a silicon oxide film, a silicon nitride film, a silicon oxynitride film, a silicon oxycarbonitride film, and a silicon carbonitride film. Example embodiments are not limited thereto.

The peripheral gate structure may be disposed on the substrate **100** and in the peripheral area **24**. The peripheral gate structure may be disposed on a peripheral active area defined by a peripheral element separation film. The peripheral gate structure may be formed in the peripheral area **24**, and may be included in a peripheral circuit for controlling a memory cell formed in the cell area **20**.

The peripheral gate structure may include a peripheral gate insulating film **230**, a peripheral gate conductive film **240**, and a peripheral capping film **244** sequentially stacked on the substrate **100**. The peripheral gate structure may include a peripheral spacer **245** disposed on a sidewall of the peripheral gate conductive film **240** and a sidewall of the peripheral capping film **244**.

The boundary peripheral gate PR_ST shown in FIG. **4** may include the peripheral gate conductive film **240**. For example, the peripheral gate structure of the peripheral area **24** may include the peripheral gate insulating film **230**, the peripheral gate conductive film **240**, the peripheral capping film **244**, and the peripheral spacer **245** as shown in FIG. **6**.

The peripheral gate conductive film **240** may include first to third peripheral conductive films **241**, **242**, and **243** sequentially stacked on the peripheral gate insulating film **230**. In one example, an additional conductive film may not be disposed between the peripheral gate conductive film **240** and the peripheral gate insulating film **230**. In another example, unlike a configuration as shown, an additional conductive film such as a work function conductive film may be disposed between the peripheral gate conductive film **240** and the peripheral gate insulating film **230**.

The peripheral gate conductive film **240** may have the same stack structure as that of each of the cell conductive lines **140**N, **140**DA, and **140**DB, and may or may not be formed at the same time as each of the cell conductive lines **140**N, **140**DA, and **140**DB. The first peripheral conductive film **241** may include the same material as that of the first cell conductive film **141**. The second peripheral conductive film **242** may include the same material as that of the second cell conductive film **142**. The third peripheral conductive film **243** may include the same material as that of the third cell conductive film **143**.

The peripheral gate insulating film **230** may include, for example, silicon oxide, silicon nitride, silicon oxynitride, or a high dielectric constant material having a higher dielectric constant than that of silicon oxide. The peripheral spacer **245** may include, for example, at least one of silicon nitride, silicon oxynitride, silicon oxide, silicon carbonitride, silicon oxycarbonitride, and combinations thereof. The peripheral capping film **244** may include, for example, at least one of a silicon nitride film, a silicon oxynitride, and a silicon oxide.

A lower etch stop film **250** may be disposed on the substrate **100**. The lower etch stop film **250** may be formed along a profile of the peripheral gate structure. The lower etch stop film **250** may be disposed on the sidewalls of the cell conductive lines **140**N, **140**DA, and **140**DB extending in the first direction D**1**. The lower etch stop film **250** may extend along a long sidewall of the outermost dummy cell conductive line **140**DA extending in the second direction D**2**. The lower etch stop film **250** may include, for example, at least one of a silicon nitride, a silicon oxynitride, a silicon carbonitride, and a silicon oxycarbonitride.

The lower peripheral interlayer insulating film **290** may be disposed on the lower etch stop film **250**. The lower peripheral interlayer insulating film **290** may be disposed on

the cell area separation film **22** and between the outermost dummy cell conductive line **140**DA and the peripheral gate conductive film **240**.

The lower peripheral interlayer insulating film **290** may include an oxide-based insulating material. An upper surface of the lower peripheral interlayer insulating film **290** may be coplanar with the lower etch stop film **250** extending along an upper surface of the peripheral capping film **244**.

An upper peripheral interlayer insulating film **291** is disposed on the peripheral gate conductive film **240** and a lower peripheral interlayer insulating film **290**. The upper peripheral interlayer insulating film **291** may cover the lower etch stop film **250** and the lower peripheral interlayer insulating film **290**.

The upper peripheral interlayer insulating film **291** may include a material different from that of the lower peripheral interlayer insulating film **290**. The upper peripheral interlayer insulating film **291** may include, for example, a nitride-based insulating material. For example, the upper peripheral interlayer insulating film **291** may include silicon nitride.

A peripheral wire line **265** may be disposed on the upper peripheral interlayer insulating film **291**. The peripheral wire line **265** may connect a peripheral circuit formed in the peripheral area **24** and a memory cell formed in the cell area **20** to each other.

A bit-line contact plug **261** may extend through the upper peripheral interlayer insulating film **291** and the cell line capping film **144** and may be connected to the normal cell conductive line **140**N. The bit-line contact plug **261** may be connected to a peripheral circuit formed in the peripheral area **24**.

In some example embodiments, the bit-line contact plug **261** may not be connected to the dummy cell conductive lines **140**DA and **140**DB. For example, the bit-line contact plug **261** connected to the dummy cell conductive lines **140**DA and **140**DB may not be formed on the dummy cell conductive lines **140**DA and **140**DB. In another example, the bit-line contact plug **261** may be connected to the dummy cell conductive lines **140**DA and **140**DB. However, the bit-line contact plug **261** connected to the dummy cell conductive lines **140**DA and **140**DB may not be connected to the peripheral circuit formed in the peripheral area **24**. Alternatively, the bit-line contact plug **261** connected to the dummy cell conductive lines **140**DA and **140**DB may not be connected to either or both of a voltage source or a current source.

The peripheral wire line **265** and the bit-line contact plug **261** may include the same material as that of the storage pad **160**. The peripheral wire line **265** and the bit-line contact plug **261** may be formed at the same level at which the storage pad **160** is formed. An upper surface **265**US of the peripheral wire line and an upper surface of the bit-line contact plug **261** may be coplanar with the upper surface **160**US of the storage pad.

An upper etch stop film **295** may be disposed on the storage pad **160**, the pad separation insulating film **180**, the peripheral wire line **265**, and the bit-line contact plug **261**. The upper etch stop film **195** may extend not only to the cell area **20** but also to the peripheral area **24**. The upper etch stop film **195** may include at least one of a silicon nitride film, a silicon carbonitride film, a silicon boron nitride film (SiBN), a silicon oxynitride film, and a silicon oxycarbide film.

The information storage element **190** may be disposed on the storage pad **160**. The information storage element **190** may be electrically connected to the storage pad **160**. A portion of the information storage **190** element may be disposed in the upper etch stop film **295**. Although the information storage element **190** may include, for example, a capacitor, example embodiments are not limited thereto. The information storage element **190** includes a lower electrode **191** and a capacitor dielectric film **192**, and an upper electrode **193**. For example, the upper electrode **193** may be a plate upper electrode having a plate shape.

The lower electrode **191** may be disposed on the storage pad **160**. Although the lower electrode **191** is shown to have a pillar shape, example embodiments are not limited thereto. In another example, the lower electrode **191** may have a cylindrical shape. The capacitor dielectric film **192** is formed on the lower electrode **191**. The capacitor dielectric film **192** may be formed along a profile of the lower electrode **191**. The upper electrode **193** is formed on the capacitor dielectric film **192**. The upper electrode **193** may surround an outer sidewall of the lower electrode **191**.

In one example, the capacitor dielectric film **192** may be disposed at a portion overlapping the upper electrode **193** in the fourth direction D**4**. In another example, unlike a configuration as illustrated, the capacitor dielectric film **192** may include a first portion overlapping the upper electrode **193** in the fourth direction D**4**, and a second portion not overlapping the upper electrode **193** in the fourth direction D**4**. That is, the second portion of the capacitor dielectric film **192** is not covered with the upper electrode **193**.

Each of the lower electrode **191** and the upper electrode **193** may include, for example, a doped semiconductor material, a conductive metal nitride (such as titanium nitride, tantalum nitride, niobium nitride, or tungsten nitride), a metal (such as ruthenium, iridium, or titanium. or tantalum, etc.), and a conductive metal oxide (such as iridium oxide or niobium oxide, etc.). Example embodiments are not limited thereto.

Although the capacitor dielectric film **192** may include, for example, one of silicon oxide, silicon nitride, silicon oxynitride and high dielectric constant material and combinations thereof. Example embodiments are not limited thereto. In the semiconductor memory device according to some example embodiments, the capacitor dielectric film **192** may include a stack structure in which layers made of zirconium oxide, aluminum oxide, and zirconium oxide are sequentially stacked. In the semiconductor memory device according to some example embodiments, the capacitor dielectric film **192** may include a dielectric film including hafnium (Hf). In the semiconductor memory device according to some example embodiments, the capacitor dielectric film **192** may have a stack structure of a ferroelectric material film and a paraelectric material film.

An interlayer insulating film **292** may be disposed on the upper etch stop film **295**. The interlayer insulating film **292** may cover a sidewall of the upper electrode **193**. The interlayer insulating film **292** may include an insulating material.

FIG. **10** and FIG. **11** are diagrams for illustrating a semiconductor memory device according to some example embodiments. For convenience of description, the description is based on differences thereof from those as described using FIG. **1** to FIG. **9**.

For reference, FIG. **10** is a cross-sectional view taken along A-A of FIG. **4**, and FIG. **11** is a cross-sectional view taken along C-C of FIG. **5**.

Referring to FIGS. **10** and **11**, the semiconductor memory device according to some example embodiments may fur-

ther include a second airgap AG_DC disposed between each of the cell conductive lines **140**N, **140**DA, and **140**DB and the bit-line contact **146**.

One of the cell conductive lines **140**N, **140**DA, and **140**DB may be disposed on the plurality of bit-line contacts **146** arranged in the first direction D**1**. The plurality of bit-line contacts **146** may include the first bit-line contact, the second bit-line contact and the third bit-line contact under one of the cell conductive lines **140**N, **140**DA, and **140**DB.

The first to third bit-line contacts may be sequentially arranged from the cell area separation film **22** in the second direction D**2**.

In FIG. **11** in which the normal cell conductive line **140**N is shown, the second airgap AG_DC may be disposed between the first bit-line contact and the normal cell conductive line **140**N, and between the third bit-line contact and the normal cell conductive line **140**N. The second airgap AG_DC is not disposed between the second bit-line contact and the normal cell conductive line **140**N.

The second airgaps AG_DC may be arranged in a discrete manner between one normal cell conductive line **140**N and the plurality of bit-line contacts **146**. Although it is illustrated that one second bit-line contact is disposed between the second airgaps AG_DCs, this is only for convenience of description. The disclosure is not limited thereto.

Based on the upper surface of the substrate **100**, each of a height of an upper surface **146**US of the first bit-line contact in which the second airgap AG_DC is disposed and a height of an upper surface **146**US of the third bit-line contact in which the second airgap AG_DC is disposed may be lower than that of an upper surface **146**US of the second bit-line contact in which the second airgap AG_DC is not disposed. Based on the upper surface of the substrate **100**, each of the height of the upper surface **146**US of the first bit-line contact in which the second airgap AG_DC is disposed and the height of the upper surface **146**US of the third bit-line contact in which the second airgap AG_DC is disposed may be smaller than a height of a bottom surface **142**BS of the second cell conductive film. Based on the upper surface of the substrate **100**, each of the height of the upper surface **146**US of the first bit-line contact in which the second airgap AG_DC is disposed and the height of the upper surface **146**US of the third bit-line contact in which the second airgap AG_DC is disposed may be lower than a height of the upper surface **141**US of the first cell conductive film.

In one example, the upper surface **146**US of the first bit-line contact in which the second airgap AG_DC is disposed and the upper surface **146**US of the third bit-line contact in which the second airgap AG_DC is disposed may not contact the bottom surface **142**BS of the second cell conductive film. Unlike a configuration shown, in another example, a portion of the upper surface **146**US of the first bit-line contact in which the second airgap AG_DC is disposed, and a portion of the upper surface **146**US of the third bit-line contact in which the second airgap AG_DC is disposed may contact the bottom surface **142**BS of the second cell conductive film.

In one example, the plurality of storage contacts **120** arranged along the first direction D**1** may not include the first airgap AG_BC.

In FIG. **10**, the second airgap AG_DC is shown as invisible. However, it is only for convenience of description. The disclosure is not limited thereto.

FIG. **12** is a diagram for illustrating a semiconductor memory device according to some example embodiments. For convenience of description, the description is based on differences thereof from those as described using FIG. **1** to FIG. **9**.

Referring to FIG. **12**, in the semiconductor memory device according to some example embodiments, a width W**1** of the outermost dummy cell conductive line **140**DA may be the same as a width W**2** of the inner dummy cell conductive line **140**DB.

The width W**1** of the outermost dummy cell conductive line **140**DA may be the same as a width W**3** of the normal cell conductive line **140**N.

FIG. **13** is a diagram for illustrating a semiconductor memory device according to various example embodiments. FIG. **14** is a diagram for illustrating a semiconductor memory device according to some example embodiments. For convenience of description, the description is based on differences thereof from those as described using FIG. **1** to FIG. **9**.

Referring to FIG. **13** and FIG. **14**, the semiconductor memory device according to some example embodiments may include four or more dummy cell conductive lines **140**DA and **140**DB.

The dummy cell conductive lines **140**DA and **140**DB may include an outermost dummy cell conductive line **140**DA and three or more inner dummy cell conductive lines **140**DB.

For example, in FIG. **4**, the dummy bit-line group BL_DG may include the outermost dummy bit-line BL_DA and the three or more inner dummy bit-line BL_DBs.

A width W**2** of the inner dummy cell conductive line **140**DB closest to the outermost dummy cell conductive line **140**DA is the same as a width W**3** of the normal cell conductive line **140**N. In some example embodiments, a width W**1** of the outermost dummy cell conductive line **140**DA is greater than the width W**2** of the inner dummy cell conductive line **140**DB. In some example embodiments, the width W**1** of the outermost dummy cell conductive line **140**DA may be the same as the width W**2** of the inner dummy cell conductive line **140**DB.

A ratio W**1**/W**2** of the width W**1** of the outermost dummy cell conductive line **140**DA to the width W**2** of the inner dummy cell conductive line **140**DB may be greater than or equal to 1.

In the semiconductor memory device according to some example embodiments, the ratio W**1**/W**2** of the width W**1** of the outermost dummy cell conductive line **140**DA to the width W**2** of the inner dummy cell conductive line **140**DB may be greater than or equal to 1, and may be smaller than or equal to 2.

Specifically, the ratio W**1**/W**2** of the width W**1** of the outermost dummy cell conductive line **140**DA to the width W**2** of the inner dummy cell conductive line **140**DB may be greater than or equal to 1 and may be smaller than or equal to 1.7.

More specifically, the ratio W**1**/W**2** of the width W**1** of the outermost dummy cell conductive line **140**DA to the width W**2** of the inner dummy cell conductive line **140**DB may be greater than or equal to 1 and may be smaller than or equal to 1.5. Description thereof will be made later using FIG. **35** to FIG. **38**.

The technical idea of example embodiments are not limited to the above range of the ratio. For example, in the semiconductor memory device according to the technical idea of the present disclosure, a case is not excluded in which the ratio W**1**/W**2** of the width W**1** of the outermost dummy cell conductive line **140**DA to the width W**2** of the inner dummy cell conductive line **140**DB exceeds 2.

In FIG. **13**, none of the plurality of storage contacts **120** arranged along the first direction D**1** may not include the first airgap (AG_BC of FIG. **6**). Although not shown, the second airgap AG_DC may not be disposed between one of the cell conductive lines **140**N, **140**DA, and **140**DB and each of the bit-line contacts **146** arranged in the second direction D**2**.

In FIG. **14**, the storage contacts **120** including the first airgap AG_BC among the plurality of storage contacts **120** arranged in the first direction D**1** may be discontinuously arranged. Although not shown, the second airgaps AG_DC may be arranged in a discrete manner between one normal cell conductive line **140**N and the plurality of bit-line contacts **146**. In this case, the plurality of storage contacts **120** arranged along the first direction D**1** may not include the first airgap AG_BC.

FIG. **15** to FIG. **22** are diagrams of intermediate steps for illustrating a semiconductor memory device manufacturing method according to some example embodiments. Those of descriptions of the manufacturing method that are duplicate with those described using FIG. **1** to FIG. **14** are briefly described or omitted. Further, the description of the manufacturing method is made using a cross section cut along the lines A-A and B-B of FIG. **4**.

Referring to FIG. **1** to FIG. **5**, FIG. **15** and FIG. **16**, the substrate **100** including the cell area **20**, the peripheral area **24**, and the cell area separation film **22** is provided.

Within the cell area **20**, the cell element separation film **105** defining the cell active area ACT may be formed.

The cell gate structure **110** may be formed in the substrate **100** and in the cell area **20**. The cell gate structure **110** may extend in an elongate manner in the first direction D**1**. The cell gate structure **110** may include the cell gate trench **115**, the cell gate insulating film **111**, the cell gate electrode **112**, the cell gate capping pattern **113**, and the cell gate capping conductive film **114**.

Subsequently, the cell insulating film **130** may be formed on the cell area **20**. The cell insulating film **130** may expose a portion of the substrate **100** in the peripheral area **24**.

Subsequently, the cell conductive lines **140**N, **140**DA, and **140**DB, and the cell line capping film **144** may be formed on a portion of the substrate **100** in the cell area **20**. For example, the plurality of bit-lines BL extending in the second direction D**2** may be formed on the portion of the substrate **100** in the cell area **20**.

While or before or after the cell conductive lines **140**N, **140**DA, and **140**DB and the cell line capping film **144** are being formed, the peripheral gate conductive film **240** and the peripheral capping film **244** may be formed. An insulating material film including the peripheral capping film **244**, the lower etch stop film **250**, and the upper peripheral interlayer insulating film **291** may be patterned to form the cell line capping film **144**.

While or before or after the cell conductive lines **140**N, **140**DA, and **140**DB and the cell line capping film **144** are being formed, the bit-line contact **146** may be formed.

Subsequently, the cell line spacer **150** may be formed. While the fourth cell line spacer **154** is formed, a storage contact recess **120**R may be formed between the cell conductive lines **140**N, **140**DA, and **140**DB adjacent to each other in the first direction D**1**.

Subsequently, a first semiconductor material film **121** may be formed on the substrate **100**. The first semiconductor material film **121** may include a semiconductor material containing impurities, such as but not limited to at least one of boron, phosphorus, or arsenic.

The first semiconductor material film **121** may cover the cell conductive lines **140**N, **140**DA, and **140**DB. The first semiconductor material film **121** may cover an upper surface of the cell line capping film **144** and an upper surface of the upper peripheral interlayer insulating film **291**. The first semiconductor material film **121** may cover an upper surface of the cell gate capping pattern **113**.

The first semiconductor material film **121** may fill the storage contact recess **120**R. The first semiconductor material film **121** may fill a space between the cell conductive lines **140**N, **140**DA, and **140**DB adjacent to each other in the first direction D**1**.

Referring to FIG. **4** and FIG. **17**, a reflective film **50** may be formed on the first semiconductor material film **121**.

The reflective film **50** may be formed on the peripheral area **24**. The reflective film **50** may overlap the peripheral area **24** in the fourth direction D**4**. The reflective film **50** may overlap at least a portion of the cell area separation film **22** in the fourth direction D**4**. The reflective film **50** may not overlap the cell area **20** in the fourth direction D**4**.

Unlike a configuration illustrated, in some other example embodiments, the reflective film **50** may not overlap the cell area separation film **22** in the fourth direction D**4**. In some example embodiments, the reflective film **50** may not overlap a portion of the peripheral area **24** in the fourth direction D**4**. In some example embodiments, at least a portion of the cell area **20** does not overlap the reflective film **50** in the fourth direction D**4**. A portion of the cell area **20** overlaps the reflective film **50** in the fourth direction D**4**, and the remainder of the cell area **20** does not overlap the reflective film **50** in the fourth direction D**4**.

The reflective film **50** may be made of or may include or may consist of insulating material. The reflective film **50** may include, for example, a reflective structure RE_ST.

The reflective structure RE_ST may include a lower reflective film **51** and an upper reflective film **52** sequentially stacked on the first semiconductor material film **121**. An upper surface of the reflective film **50** may be defined by the upper reflective film **52**.

The lower reflective film **51** may be made of an insulating material having a first refractive index. The upper reflective film **52** may be made of an insulating material having a second refractive index greater than the first refractive index. Each of the first refractive index and the second refractive index is smaller than a refractive index of the first semiconductor material film **121**.

For example, the upper reflective film **52** may include silicon nitride or hafnium oxide. Example embodiments are not limited thereto. Although the lower reflective film **51** may include silicon oxide or TEOS (Tetraethyl orthosilicate), example embodiments are not limited thereto.

In a semiconductor memory device manufacturing method according to some example embodiments, the reflective film **50** may include a pair of a lower reflective film **51** and an upper reflective film **52**.

Each of a thickness of the lower reflective film **51** and a thickness of the upper reflective film **52** may vary depending on a wavelength of laser used in a laser annealing process (**60** in FIG. **18**) that is subsequently performed. Further, the thickness of the lower reflective film **51** may vary depending on a refractive index of an insulating material included in the lower reflective film **51**. The thickness of the upper reflective film **52** may vary depending on a refractive index of an insulating material included in the upper reflective film **52**.

Referring to FIG. **4**, FIG. **17** to FIG. **19**, the laser may be irradiated onto the first semiconductor material film **121** on which the reflective film **50** has been formed. The laser annealing process **60** using the reflective film **50** may be performed.

Using the laser annealing process **60**, a second semiconductor material film **122** may be formed on the substrate **100**. The second semiconductor material film **122** may be formed by recrystallizing the first semiconductor material film **121**. The first semiconductor material film **121** is heated and melted by the laser irradiated onto the first semiconductor material film **121**, such that the first semiconductor material film **121** may be recrystallized.

Although not shown, the first void or the first seam or the first airgap (AG_BC of FIG. **6**) may be formed in or within the second semiconductor material film **122**. Alternatively or additionally, the second airgap AG_DC may be formed between each of the cell conductive lines **140**N, **140**DA, and **140**DB and the bit-line contact **146**.

When the laser annealing process **60** is performed without the reflective film **50**, excess heat may be generated in the vicinity of the cell area separation film **22**. In this case, the heat generated from the laser annealing process **60** may flow to the cell area **20** forming a boundary with the cell area separation film **22**. For example, inside the first semiconductor material film **121**, a heat flow from the peripheral area **24** to the cell area **20** may be generated. Thus, the heat flow may affect the bit-line contact **146** made of a semiconductor material near the boundary of the cell area **20**. For example, a defect may be generated between the bit-line contact **146** disposed near the boundary of the cell area **20** and the normal cell conductive line **140**N.

On the contrary, an amount of the laser energy absorbed by a portion of the first semiconductor material film **121** on which the reflective film **50** is formed is smaller than or less than an amount of the laser energy absorbed by a portion of the first semiconductor material film **121** on which the reflective film **50** is not formed. For example, using the reflective film **50** in the laser annealing process **60** may allow preventing or reducing occurrence of and/or impact from the excess heat in the vicinity of the cell area separation film **22**. This may prevent or reduce occurrence of and/or impact from the heat flow from the peripheral area **24** to the cell area **20** inside the first semiconductor material film **121**.

Referring to FIG. **4**, FIG. **20** to FIG. **22**, the reflective film **50** on the second semiconductor material film **122** may be removed.

A portion of the second semiconductor material film **122** may be removed to expose the cell line capping film **144**.

The second semiconductor material film **122** may be patterned to form the storage contact **120** on the substrate **100** and in the cell area **20**. The storage contact **120** may be connected to the active area ACT of the cell area **20**.

The fence pattern **170** may be formed on the cell gate structure **110**. The fence pattern **170** may fill a space in which the second semiconductor material film **122** is removed.

Then, referring to FIG. **6** and FIG. **7**, the storage pad **160** may be formed on the storage contact **120**. Further, the information storage **190** connected to the storage pad **160** may be formed.

FIG. **23** to FIG. **26** are diagrams for illustrating a semiconductor memory device manufacturing method according to some example embodiments, respectively.

For reference, each of FIG. **23** to FIG. **26** may refer to a manufacturing process performed after FIG. **15** and FIG. **16**. Further, after each of FIG. **23** to FIG. **26** is performed, the manufacturing process as described in FIG. **18** to FIG. **22** may proceed.

Referring to FIG. **23**, the reflective film **50** may include a plurality of reflective structures RE_ST.

The reflective film **50** may include a plurality of lower reflective films **51** and a plurality of upper reflective films **52**. The reflective film **50** may include a plurality of lower reflective film **51** and a plurality of upper reflective film **52** alternately stacked on the first semiconductor material film **121**.

Referring to FIG. **24** and FIG. **25**, the reflective film **50** may include an end **50**_EP of the reflective film having a chamfered shape.

The end **50**_EP of the reflective film may have a chamfered shape. The end **50**_EP of the reflective film may be tapered.

In FIG. **24**, the upper reflective film **52** may have a chamfered shape. The lower reflective film **51** may not have a chamfered shape.

In FIG. **25**, each of the upper reflective film **52** and the lower reflective film **51** may have a chamfered shape. A pair of reflective structures RE_ST may have a chamfered shape.

Referring to FIG. **26**, the reflective film **50** including the plurality of reflective structures RE_ST may include an end **50**_EP of the reflective film having a chamfered shape.

An end of at least one of the plurality of reflective structures RE_ST may have a chamfered shape. For example, the reflective film **50** may include a reflective structure RE_ST having a chamfered shape or a beveled shape at an end thereof and a reflective structure RE_ST free of chamfered shape or beveled shape at an end thereof.

Unlike a configuration as shown, in one example, all of reflective structures RE_ST included in the reflective film **50** may include an end having a chamfered shape or a beveled shape. In another example, in a reflective structure RE_ST having an end of a chamfered shape, the upper reflective film **52** may have a chamfered shape, and the lower reflective film **51** may not have a chamfered shape.

FIG. **27** to FIG. **30** are diagrams of intermediate steps for illustrating a semiconductor memory device manufacturing method according to some example embodiments. For reference, FIG. **27** to FIG. **30** may refer to a manufacturing process performed after FIG. **15** and FIG. **16**.

Referring to FIG. **4**, FIG. **27**, and FIG. **28**, an anti-reflective film **70** may be formed on the first semiconductor material film **121**.

The anti-reflective film **70** may be formed on the cell area **20**. The anti-reflective film **70** may overlap the cell area **20** in the fourth direction D**4**. The anti-reflective film **70** may overlap at least a portion of the cell area separation film **22** in the fourth direction D**4**. The anti-reflective film **70** may not overlap the peripheral area **24** in the fourth direction D**4**.

Unlike a configuration as illustrated, in an example, the anti-reflective film **70** may not overlap the cell area separation film **22** in the fourth direction D**4**. In another example, the anti-reflective film **70** may not overlap a portion of the cell area **20** in the fourth direction D**4**. In another example, at least a portion of the peripheral area **24** does not overlap the anti-reflective film **70** in the fourth direction D**4**. A portion of the peripheral area **24** may not overlap the anti-reflective film **70** in the fourth direction D**4**, and the remainder of the peripheral area **24** may overlap the anti-reflective film **70** in the fourth direction D**4**.

The anti-reflective film **70** may be made of insulating material. The anti-reflective film **70** may be formed of, for example, a single film. A refractive index of the anti-reflective film **70** is smaller than a refractive index of the first semiconductor material film **121**. Although the anti-reflective film **70** may include, for example, silicon oxide, example embodiments are not limited thereto.

Reflectivity at which the anti-reflective film **70** reflects the laser used in the laser annealing process (**60** in FIG. **29**) may vary based on a thickness of the anti-reflective film **70**. The thickness of the anti-reflective film **70** may be determined based on the reflectivity at which the anti-reflective film **70** reflects the laser used in the laser annealing process **60**.

Unlike a configuration as shown, the anti-reflective film **70** may include an end having a chamfered shape as shown in FIG. **24** to FIG. **26**.

Referring to FIG. **4**, FIG. **29**, and FIG. **30**, the laser may be irradiated onto the first semiconductor material film **121** on which the anti-reflective film **70** has been formed. The laser annealing process **60** using the anti-reflective film **70** may be performed.

Using the laser annealing process **60**, the first semiconductor material film **121** may be recrystallized, such that the second semiconductor material film **122** may be formed on the substrate **100**.

Although not shown, the first airgap (AG_BC of FIG. **6**) may be formed in the second semiconductor material film **122**. Alternatively or additionally, the second airgap AG_DC may be formed between each of the cell conductive lines **140**N, **140**DA, and **140**DB and the bit-line contact **146**.

An amount of laser energy absorbed by a portion of the first semiconductor material film **121** on which the anti-reflective film **70** is formed is greater than an amount of laser energy absorbed by a portion of the first semiconductor material film **121** on which the anti-reflective film **70** is not formed. For example, using the anti-reflective film **70** in the laser annealing process **60** may allow preventing or reducing occurrence of and/or impact from excess heat in the vicinity of the cell area separation film **22**. This may prevent or reduce occurrence of and/or impact from heat flow from the peripheral area **24** to the cell area **20** inside the first semiconductor material film **121**.

Subsequently, referring to FIG. **20** to FIG. **22**, the anti-reflective film **70** on the second semiconductor material film **122** may be removed. Subsequently, the second semiconductor material film **122** may be patterned to form the storage contact **120** on the substrate **100** and in the cell area **20**.

FIG. **31** and FIG. **32** are diagrams for illustrating a semiconductor memory device manufacturing method according to some example embodiments, respectively.

For reference, each of FIG. **31** and FIG. **32** may refer to a manufacturing process performed after FIG. **15** and FIG. **16**. Further, after each of FIG. **31** and FIG. **32** is performed, the manufacturing process described in FIG. **29** and FIG. **30** may proceed.

Referring to FIG. **31**, the anti-reflective film **70** may include a first area **70**R**1** having a first thickness t**1** and a second area **70**R**2** having a second thickness t**2**.

The first area **70**R**1** of the anti-reflective film may be formed on the cell area **20**. The first area **70**R**1** of the anti-reflective film may overlap the cell area **20** in the fourth direction D**4**. The first area **70**R**1** of the anti-reflective film may overlap with at least a portion of the cell area separation film **22** in the fourth direction D**4**. The first area **70**R**1** of the anti-reflective film may not overlap the peripheral area **24** in the fourth direction D**4**.

The second area **70**R**2** of the anti-reflective film may be formed on the peripheral area **24**. The second area **70**R**2** of the anti-reflective film may overlap the peripheral area **24** in the fourth direction D**4**.

For example, the thickness t**1** of the first area **70**R**1** of the anti-reflective film is greater than the thickness t**2** of the second area **70**R**2** of the anti-reflective film. Reflectivity of the anti-reflective film **70** having the first thickness t**1** is smaller than Reflectivity of the anti-reflective film **70** having the second thickness t**2**.

Unlike a configuration as illustrated, the thickness t**1** of the first area **70**R**1** of the anti-reflective film may be smaller than the thickness t**2** of the second area **70**R**2** of the anti-reflective film. Even in this case, the reflectivity of the anti-reflective film **70** having the first thickness t**1** is smaller than the reflectivity of the anti-reflective film **70** having the second thickness t**2**.

Referring to FIG. **32**, the anti-reflective film **70** may include the first anti-reflective films **71** and the second anti-reflective films **72** that are alternately stacked.

The anti-reflective film **70** may include at least one first anti-reflective film **71** and a plurality of second anti-reflective films **72**. The number of the second anti-reflective films **72** is greater than the number of the first anti-reflective films **71** by one. A portion of the anti-reflective film **70** closest to the first semiconductor material film **121** may be the first anti-reflective film **71**. An upper surface of the anti-reflective film **70** may be defined by the first anti-reflective film **71**.

The first anti-reflective film **71** may be made of an insulating material having a third refractive index. The second anti-reflective film **72** may be made of an insulating material having a fourth refractive index greater than the third refractive index. Each of the third refractive index and the fourth refractive index is smaller than the refractive index of the first semiconductor material film **121**.

Each of a thickness of the first anti-reflective film **71** and a thickness of the second anti-reflective film **72** may vary depending on a wavelength of the laser used in the laser annealing process (**60** in FIG. **29**). Further, the thickness of the first anti-reflective film **71** may vary based on a refractive index of an insulating material included in the first anti-reflective film **71**. The thickness of the second anti-reflective film **72** may vary based on a refractive index of an insulating material included in the second anti-reflective film **72**.

In some examples, the first anti-reflective films **71** respectively disposed on an upper surface and a bottom surface of the second anti-reflective film **72** may include the same material.

In other examples, the first anti-reflective films **71** respectively disposed on an upper surface and a bottom surface of the second anti-reflective film **72** may include different materials. For example, the first anti-reflective film **71** between the second anti-reflective film **72** and the first semiconductor material film **121** may include a material different from a material of the first anti-reflective film **71** disposed on an upper surface of the second anti-reflective film **72**.

FIG. **33** and FIG. **34** are diagrams for illustrating edge diffraction.

In FIG. **33**, the first semiconductor material film **121** may be formed on the substrate **100** including the cell area **20**, the cell area separation film **22**, and the peripheral area **24**. The reflective film **50** may be formed on the first semiconductor material film **121**.

The reflective film **50** is disposed on a portion of the first semiconductor material film **121** in one side area around an end of the reflective film **50** and is not disposed on a portion of the first semiconductor material film **121** in the other side area around the end of the reflective film **50**. For example, a refractive index of a medium through which the laser used in the laser annealing process **60** propagates rapidly changes at the end of the reflective film **50**. That is, edge diffraction may be generated in a boundary portion EDGE_R of the reflective film **50**.

In FIG. **33** and FIG. **34**, fluctuation in an intensity of laser energy absorbed by a portion of the first semiconductor material film **121** on the cell area **20** may occur at a boundary of the cell area **20** and the cell area separation film **22** due to the edge diffraction. As the cell area **20** extends away from the boundary between the cell area and the cell area separation film **22**, the intensity of laser energy absorbed by the portion of the first semiconductor material film **121** on the cell area **20** may converge to a constant value.

In FIG. **34**, when the intensity of laser energy absorbed by the first semiconductor material film **121** is greater than an upper limit U.L. of absorption intensity, the first semiconductor material film **121** may be overheated. In this case, the second airgap AG_DC as described in FIG. **10** and FIG. **11** may be formed.

When the intensity of the laser energy absorbed by the first semiconductor material film **121** is less than a lower limit L.L of the absorption intensity, the first semiconductor material film **121** may not be heated such that the first semiconductor material film **121** is entirely melted. In this case, the first airgap AG_BC as described in FIG. **6** to FIG. **9** may be formed.

When the intensity of laser energy absorbed by the first semiconductor material film **121** is indicated by (1) in FIG. **34**, the intensity of laser energy absorbed by the portion of the first semiconductor material film **121** on the cell area **20** may be located between the upper limit U.L. and the lower limit L.L. of absorption intensity. In this case, both the first airgap (AG_BC of FIG. **6**) and the second airgap (AG_DC of FIG. **11**) may not be formed.

When the intensity of laser energy absorbed by the first semiconductor material film **121** is indicated by (2) in FIG. **34**, the intensity of laser energy absorbed by a portion of the first semiconductor material film **121** on a portion of the cell area **20** may be lower than the lower limit L.L of the absorption intensity. Since the intensity of laser energy absorbed by the first semiconductor material film **121** has a wave form, points at which the intensity of laser energy is lower than the lower limit L.L. of absorption intensity may be arranged discontinuously in the portion of the cell area **20**. In this case, the storage contacts **120** containing therein the first airgap AG_BC may be arranged in a discrete manner as shown in

When the intensity of the laser energy absorbed by the first semiconductor material film **121** is indicated by (3) in FIG. **34**, the intensity of laser energy absorbed by a portion of the first semiconductor material film **121** on a portion of the cell area **20** may be higher than the upper limit U.L. of the absorption intensity. Thus, points at which the intensity of laser energy is greater than the upper limit U.L. of the absorption intensity may be arranged discontinuously in the portion of the cell area **20**. In this case, as shown in FIG. **11**, the second airgaps AG_DC may be arranged in a discrete manner between one normal cell conductive line **140**N and each of the plurality of bit-line contacts **146**.

The fluctuation of the laser absorption intensity due to the edge diffraction via the laser annealing process **60** using the reflective film **50** has been described. However, the above description may also be applied to the laser annealing process **60** using the anti-reflective film (**70** in FIG. **27**).

FIG. **35** to FIG. **38** are diagrams to illustrate an effect of an arrangement of structures on the substrate on the intensity of laser energy absorbed by the semiconductor material film.

In FIG. **35** and FIG. **37**, a first block structure ST**1** and a second block structure ST**2** may be disposed on the substrate **100** including the cell area **20**, the cell area separation film **22**, and the peripheral area **24**. The second block structure ST**2** may be a structure disposed at the outermost location of the cell area **20** among the block structures ST**1** and ST**2**.

The first semiconductor material film **121** may be formed on the first block structure ST**1** and the second block structure ST**2**, and then the reflective film **50** may be formed on the first semiconductor material film **121**.

The first block structure ST**1** may have a fourth width W**41**. The second block structure ST**2** may have a fifth width W**42**. The block structures ST**1** and ST**2** may include one second block structure ST**2** and a plurality of first block structures ST**1**.

The first block structures ST**1** may correspond to the inner dummy cell conductive line **140**DB and the normal cell conductive line **140**N as described in FIG. **1** to FIG. **14**. The second block structure ST**2** may correspond to the outermost dummy cell conductive line **140**DA.

FIG. **36** and FIG. **38** are graphs showing an intensity of laser energy absorbed by a portion of the first semiconductor material film **121** on the cell area **20** in the laser annealing process **60**. FIG. **36** is a graph showing an intensity of laser energy absorbed by the first semiconductor material film **121** when the block structures ST**1** and ST**2** as shown in FIG. **35** are arranged. FIG. **38** is a graph showing an intensity of laser energy absorbed by the first semiconductor material film **121** when the block structures ST**1** and ST**2** as shown in FIG. **37** are arranged.

In FIG. **36** and FIG. **38**, the cell area **20** may include a dummy cell area **20**_DR and an effective cell area **20**_EFR. The dummy cell area **20**_DR may be an area in which the dummy cell conductive lines **140**DA and **140**DB as described in FIG. **1** to FIG. **14** are disposed. The effective cell area **20**_EFR may be an area in which the normal cell conductive line **140**N as described in FIG. **1** to FIG. **14** is disposed.

In FIG. **36** and FIG. **38**, the intensity of the laser energy absorbed by a portion of the first semiconductor material film **121** on the cell area **20** may be located between the upper limit U.L. of the absorption intensity and the lower limit L.L. of absorption intensity.

A ratio W**42**/W**41** of the width W**42** of the second block structure ST**2** to the width W**41** of the first block structure ST**1** in FIG. **35** is larger than a ratio W**42**/W**41** of the width W**42** of the second block structure ST**2** to the width W**41** of the first block structure ST**1** in FIG. **37**. In FIG. **37**, the ratio W**42**/W**41** of the width W**42** of the second block structure ST**2** to the width W**41** of the first block structure ST**1** may be greater than or equal to 1.

In the effective cell area **20**_EFR of FIG. **36**, a difference between a maximum value and a minimum value of the intensity of laser energy absorbed by the first semiconductor material film **121** may be a first energy gap GAP**1**. In the effective cell area **20**_EFR of FIG. **38**, a difference between a local or global maximum value and a local or global minimum value of the intensity of laser energy absorbed by the first semiconductor material film **121** may be a second energy gap GAP**2**.

The second energy gap GAP**2** in the effective cell area **20**_EFR of FIG. **38** is smaller than the first energy gap GAP**1** in the effective cell area **20**_EFR of FIG. **36**. In other words, as the ratio W**42**/W**41** of the width W**42** of the second block structure ST**2** to the width W**41** of the first block structure ST**1** decreases, the energy gap in the effective cell area **20**_EFR may decrease.

When the process condition of the laser annealing process **60** fluctuates, a probability at which the intensity of the laser energy absorbed by the first semiconductor material film **121** exceeds the upper limit U.L. of the absorption intensity or is

lower than the lower limit L.L. of the absorption intensity in FIG. **36** is higher than that in FIG. **38**. For example, reducing the ratio W**42**/W**41** of the width W**42** of the second block structure ST**2** to the width W**41** of the first block structure ST**1** may allow stability and/or reliability of the manufacturing process to be improved.

The ratio W**42**/W**41** of the width W**42** of the second block structure ST**2** to the width W**41** of the first block structure ST**1** may be greater than or equal to 1, and may be less than or equal to 2. For example, the ratio W**42**/W**41** of the width W**42** of the second block structure ST**2** to the width W**41** of the first block structure ST**1** may be greater than or equal to 1 and may be smaller than or equal to 1.7. More preferably, the ratio W**42**/W**41** of the width W**42** of the second block structure ST**2** to the width W**41** of the first block structure ST**1** may be greater than or equal to 1 and may be smaller than or equal to 1.5.

In another example, the description using FIG. **35** to FIG. **38** may be equally applied to the laser annealing process **60** using the anti-reflective film (**70** of FIG. **27**).

Although the embodiments of the present disclosure have been described in more detail with reference to the accompanying drawings, example embodiments are not necessarily limited to these embodiments. The present disclosure may be implemented in various modified manners within the scope not departing from the technical idea of the present disclosure. Accordingly, various example embodiments as disclosed are not intended to limit technical ideas of example embodiments, but to describe various examples. The scope of the technical idea of example embodiments are not limited by example embodiments. Therefore, it should be understood that the embodiments as described above are illustrative and non-limiting in all respects. The scope of protection should be interpreted by the claims, and all technical ideas within the scope should be interpreted as being included in the scope of example embodiments. Example embodiments are not necessarily mutually exclusive with one another. For example, some example embodiments may include one or more features described with reference to one or more figures, and may also include one or more other features described with reference to one or more other figures.

What is claimed is:

1. A semiconductor memory device comprising:

a substrate having a cell area and a peripheral area defined along a periphery of the cell area, wherein the cell area includes an active area defined by a cell element separation film;

a cell area separation film in the substrate and defining the cell area; and

a plurality of storage contacts connected to the active area, and arranged along a first direction,

wherein the plurality of storage contacts includes a first storage contact, a second storage contact, and a third storage contact,

the second storage contact is between the first storage contact and the third storage contact,

each of the first storage contact and the third storage contact defines an airgap, and

the second storage contact is free of an airgap.

2. The semiconductor memory device of claim **1**, wherein each of the first through third storage contacts includes a semiconductor material.

3. The semiconductor memory device of claim **1**, further comprising:

a storage pad; and

an information storage element, the storage pad and the information storage element connected to each of the storage contacts.

4. The semiconductor memory device of claim **3**, wherein the information storage element includes a lower electrode connected to the storage pad, a capacitor dielectric film on the lower electrode, and a plate upper electrode on the capacitor dielectric film.

5. The semiconductor memory device of claim **1**, further comprising:

a plurality of dummy bit-line groups and a plurality of normal bit-line groups, the plurality of dummy bit-line groups and the plurality of normal bit-line groups on the cell area and extending in a second direction perpendicular to the first direction,

wherein the plurality of dummy bit-line groups are along a boundary of the cell area extending in the second direction.

6. The semiconductor memory device of claim **5**, wherein the plurality of dummy bit-line groups include a first dummy bit-line closest to the peripheral area in the first direction, and a second dummy bit-line closest to the first dummy bit-line in the first direction, and

a width in the first direction of the first dummy bit-line is greater than a width in the first direction of the second dummy bit-line.

7. The semiconductor memory device of claim **5**, wherein the plurality of dummy bit-line groups include a first dummy bit-line closest to the peripheral area in the first direction, and a second dummy bit-line closest to the first dummy bit-line in the first direction, and

a width in the first direction of the first dummy bit-line is equal to a width in the first direction of the second dummy bit-line.

8. A semiconductor memory device comprising:

a substrate having a cell area and a peripheral area defined along a periphery of the cell area, wherein the cell area includes an active area defined by a cell element separation film;

a cell area separation film in the substrate and defining the cell area;

a plurality of bit-line contacts connected to the active area and arranged along a first direction; and

a bit-line on the plurality of bit-line contacts, and extending in the first direction,

wherein the plurality of bit-line contacts include a first bit-line contact, a second bit-line contact, and a third bit-line contact,

the second bit-line contact is between the first bit-line contact and the third bit-line contact,

the first bit-line contact and the bit-line have an airgap therebetween, and

the second bit-line contact and the bit line do not have an airgap therebetween.

9. The semiconductor memory device of claim **8**, wherein each of the bit-line contacts includes a semiconductor material.

10. The semiconductor memory device of claim **8**, wherein the bit-line includes a semiconductor conductive line and a metallic conductive line sequentially arranged on the substrate.

11. The semiconductor memory device of claim **10**, wherein each of an upper surface of the first bit-line contact and an upper surface of the third bit-line contact is lower than an upper surface of the semiconductor conductive line.

12. The semiconductor memory device of claim **8**, further comprising:

a storage contact on a side of the bit-line; and

an information storage element connected to the storage contact.

13. The semiconductor memory device of claim **12**, wherein the information storage element includes,

a lower electrode connected to a storage contact,

a capacitor dielectric film on the lower electrode, and

a plate upper electrode on the capacitor dielectric film.

14. A semiconductor memory device comprising:

a substrate having a cell area and a peripheral area defined along a periphery of the cell area, wherein the cell area includes an active area defined by a cell element separation film;

a cell area separation film in the substrate and defining the cell area;

a normal bit-line on the cell area and extending in a first direction;

a group of dummy bit-lines on the cell area and arranged on one side of the normal bit-line; and

a plurality of storage contacts connected to the active area and arranged along a second direction perpendicular to the first direction,

wherein the group of dummy bit-lines includes a first dummy bit-line closest to the peripheral area in the second direction, and a second dummy bit-line closest to the first dummy bit-line in the second direction,

the first dummy bit-line extends in the first direction and has a first width in the second direction,

the second dummy bit-line extends in the first direction and has a second width in the second direction, and

a ratio of the first width to the second width is greater than or equal to 1, and is less than or equal to 2.

15. The semiconductor memory device of claim **14**, wherein a width in the second direction of the normal bit-line is equal to the second width.

16. The semiconductor memory device of claim **14**, wherein the ratio of the first width to the second width is greater than or equal to 1 and is less than or equal to 1.7.

17. The semiconductor memory device of claim **16**, wherein the ratio of the first width to the second width is greater than or equal to 1 and is less than or equal to 1.5.

18. The semiconductor memory device of claim **14**, wherein the group of dummy bit-lines includes at least four dummy bit-lines.

19. The semiconductor memory device of claim **14**, wherein

the plurality of storage contacts includes a first storage contact, a second storage contact, and a third storage contact,

the second storage contact is between the first storage contact and the third storage contact,

wherein each of the first storage contact and the third storage contact defines an airgap, and

the second storage contact does not surround an airgap.

20. The semiconductor memory device of claim **14**, further comprising:

an information storage element connected to each of the storage contacts,

wherein the information storage element includes a lower electrode connected to a storage contact, a capacitor dielectric film on the lower electrode, and a plate upper electrode on the capacitor dielectric film.

* * * * *