US012388207B2

(12) **United States Patent**
Nakamura

(10) **Patent No.: US 12,388,207 B2**
(45) **Date of Patent: Aug. 12, 2025**

(54) **CONNECTOR**

(71) Applicant: **JAPAN AVIATION ELECTRONICS INDUSTRY, LIMITED**, Tokyo (JP)

(72) Inventor: **Keisuke Nakamura**, Tokyo (JP)

(73) Assignee: **JAPAN AVIATION ELECTRONICS INDUSTRY, LIMITED**, Tokyo (JP)

(*) Notice: Subject to any disclaimer, the term of this patent is extended or adjusted under 35 U.S.C. 154(b) by 394 days.

(21) Appl. No.: **18/111,081**

(22) Filed: **Feb. 17, 2023**

(65) **Prior Publication Data**

US 2023/0327351 A1 Oct. 12, 2023

(30) **Foreign Application Priority Data**

Apr. 11, 2022 (JP) 2022-065242

(51) **Int. Cl.**
H01R 12/71 (2011.01)
H01R 13/422 (2006.01)
H01R 13/50 (2006.01)

(52) **U.S. Cl.**
CPC ***H01R 12/716*** (2013.01); ***H01R 13/422*** (2013.01); ***H01R 13/50*** (2013.01)

(58) **Field of Classification Search**
CPC H01R 12/716; H01R 13/422; H01R 13/50; H01R 13/02; H01R 12/71; H01R 13/42; H01R 13/502
See application file for complete search history.

(56) **References Cited**

U.S. PATENT DOCUMENTS

5,876,217 A * 3/1999 Ito H01R 13/20 439/74
5,902,136 A 5/1999 Lemke et al.
6,048,482 A 4/2000 Lemke et al.
6,065,951 A 5/2000 Lemke et al.
6,863,578 B2 3/2005 Templin et al.
9,276,343 B2 3/2016 Nakamura
2004/0171285 A1* 9/2004 Okura H01R 12/716 439/74

(Continued)

FOREIGN PATENT DOCUMENTS

JP H10134913 A 5/1998
JP 2004514296 A 5/2004

(Continued)

Primary Examiner — Abdullah A Riyami
Assistant Examiner — Nelson R. Burgos-Guntin
(74) *Attorney, Agent, or Firm* — Holtz, Holtz & Volek PC

(57) **ABSTRACT**

A connector comprises a housing, a plurality of terminals and a plurality of coupling portions. The terminals form two terminal rows. In each of the two terminal rows, the terminals are arranged in a pitch direction perpendicular to a width direction. The terminals of one of the two terminal rows respectively correspond to the terminals of a remaining one of the two terminal rows. Each of the terminals has a press-fit portion, a supporting portion, a contact point and a coupled portion. The supporting portion extends from the press-fit portion. The coupled portion extends from the contact point. Each of the coupling portions is made of insulator. Each of the coupling portions couples the coupled portion of the terminal of the one of the terminal rows with the coupled portion of the corresponding terminal of the remaining one of the terminal rows in a direction perpendicular to the pitch direction.

8 Claims, 18 Drawing Sheets

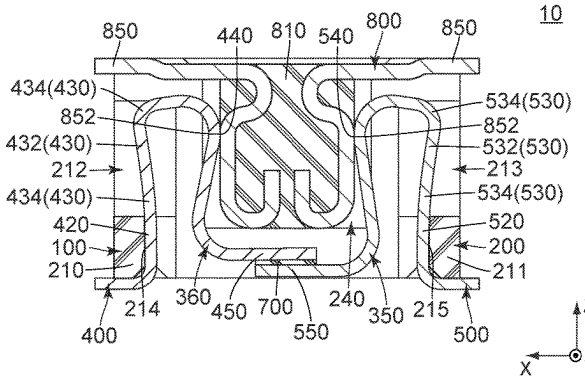

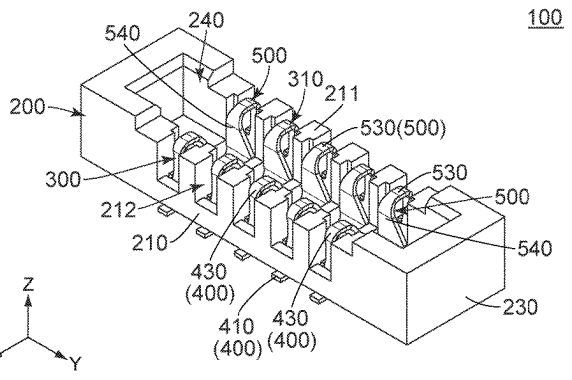

(56) **References Cited**

U.S. PATENT DOCUMENTS

2005/0009383	A1*	1/2005	Okura	H01R 12/79 439/74
2012/0028507	A1*	2/2012	Katano	H01R 13/115 439/660
2017/0125930	A1*	5/2017	Komoto	H01R 13/405
2017/0294737	A1*	10/2017	Horchler	H01R 13/5216
2019/0173233	A1*	6/2019	Horino	H01R 13/6594
2019/0181573	A1*	6/2019	Horino	H01R 12/716
2019/0190209	A1*	6/2019	Horino	H01R 13/6582
2019/0348782	A1*	11/2019	Horii	H01R 12/737
2020/0106200	A1*	4/2020	Ishida	H01R 13/6594
2020/0295511	A1*	9/2020	Shioda	H01R 12/91
2021/0367362	A1*	11/2021	Yamada	H01R 12/716

FOREIGN PATENT DOCUMENTS

JP	2007026964	A	2/2007
JP	2015133202	A	7/2015
JP	6869491	B2	4/2021

* cited by examiner

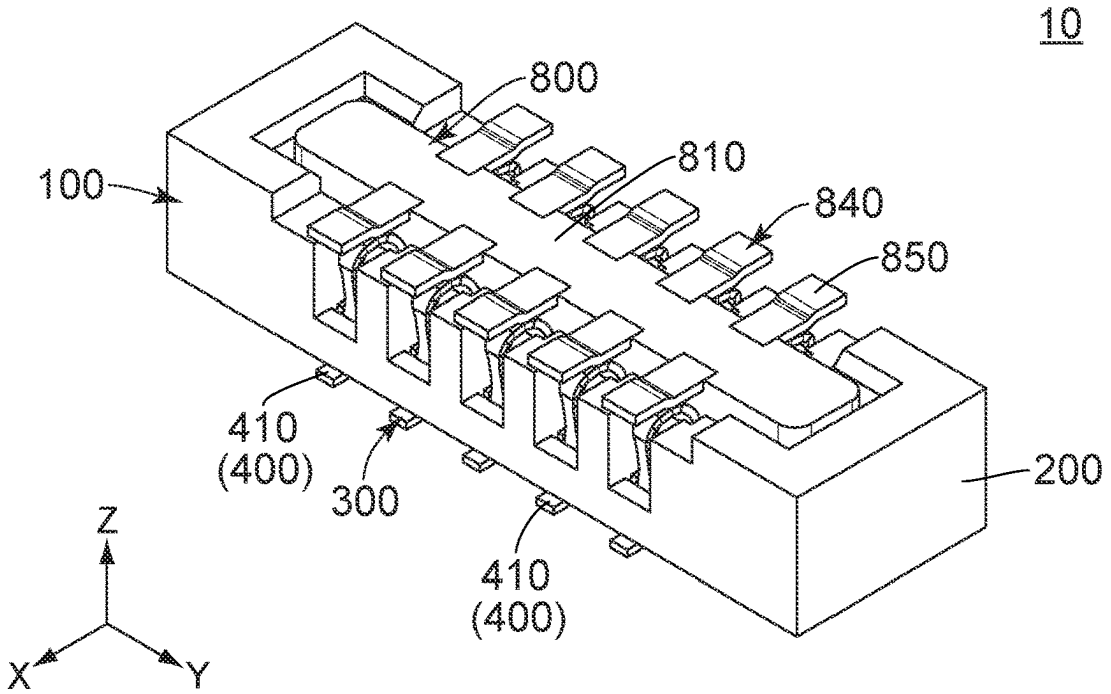
10
800
810
840
850
100
410
(400)
300
410
(400)
200
Z
X
Y

FIG. 1

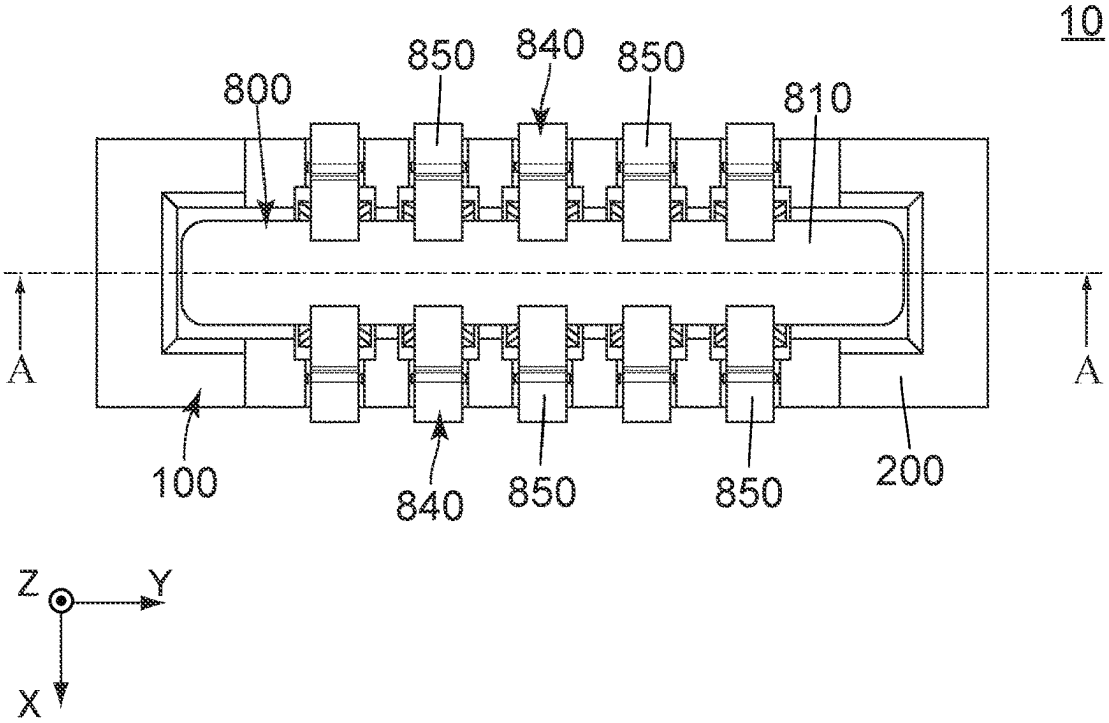
10
850
840
850
800
810
A
A
100
840
850
850
200
Z
Y
X

FIG. 2

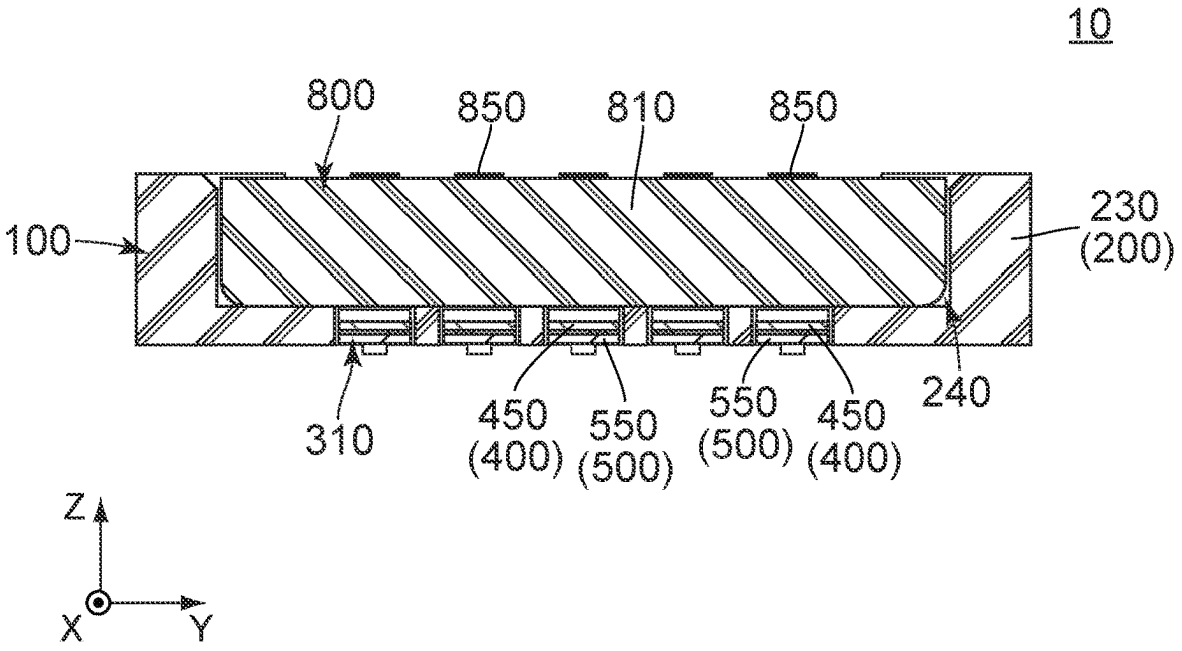
10
800
850
810
850
100
230
(200)
310
450
(400)
550
(500)
550
(500)
450
(400)
240
Z
X
Y

FIG. 3

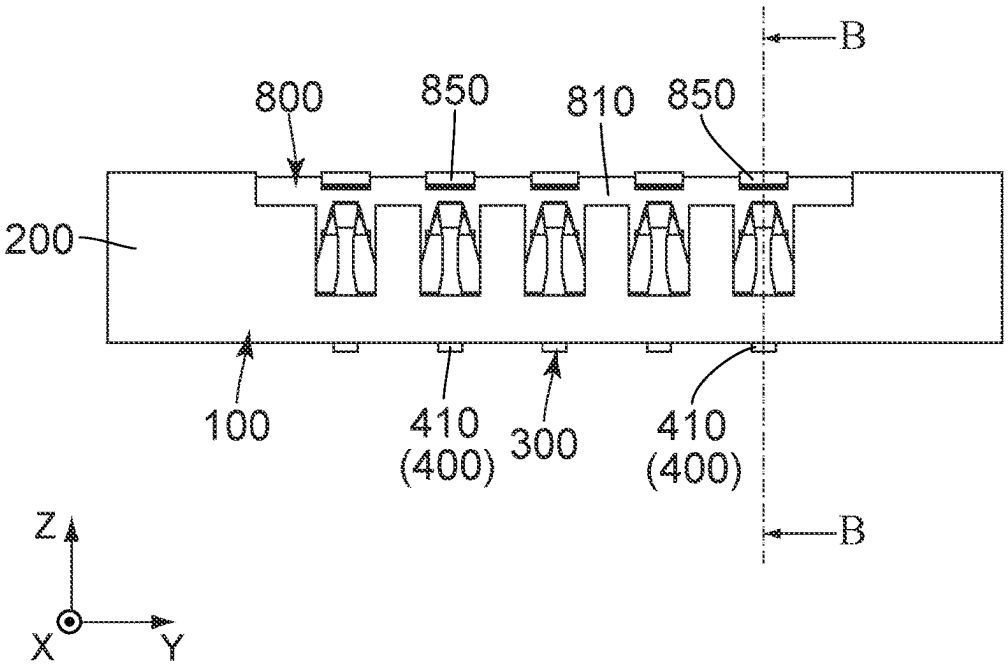
B
800
850
810
850
200
100
410
(400)
300
410
(400)
B
Z
X
Y

FIG. 4

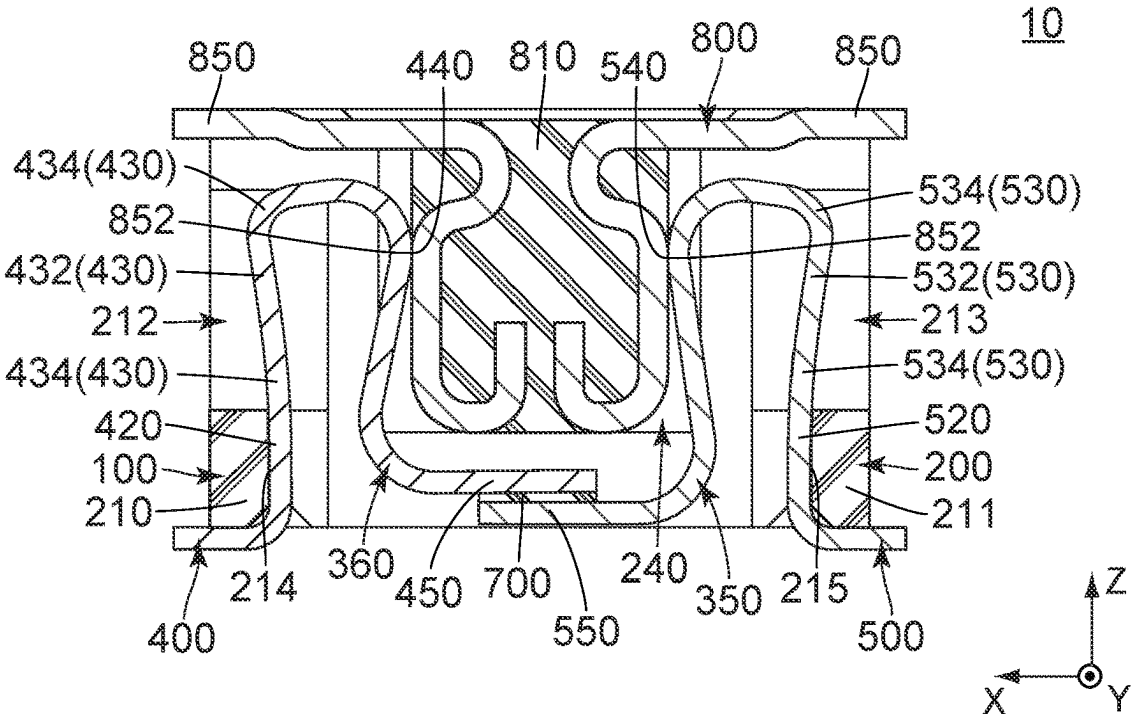
10
850
440
810
540
800
850
434(430)
852
432(430)
212
434(430)
420
100
210
534(530)
852
532(530)
213
534(530)
520
200
211
400
214
360
450
700
550
240
350
215
500
Z
X
Y

FIG. 5

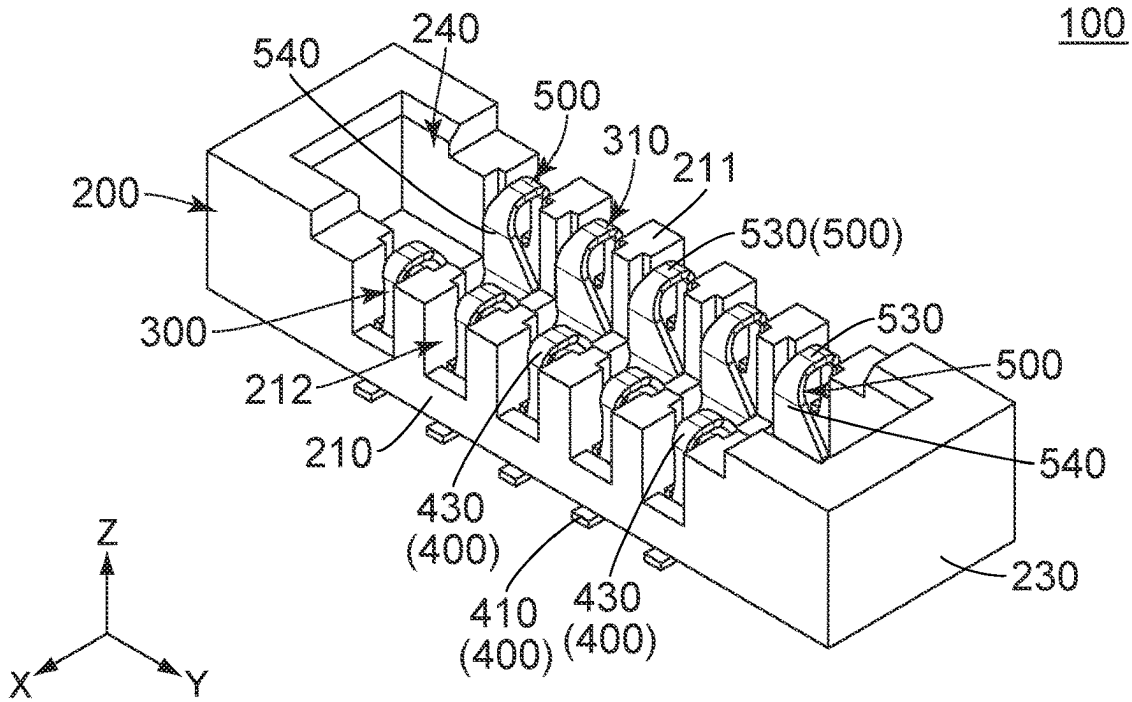
100
240
540
500
310
211
200
530(500)
300
530
500
212
210
540
430
(400)
410
(400)
430
(400)
230
Z
X
Y

FIG. 6

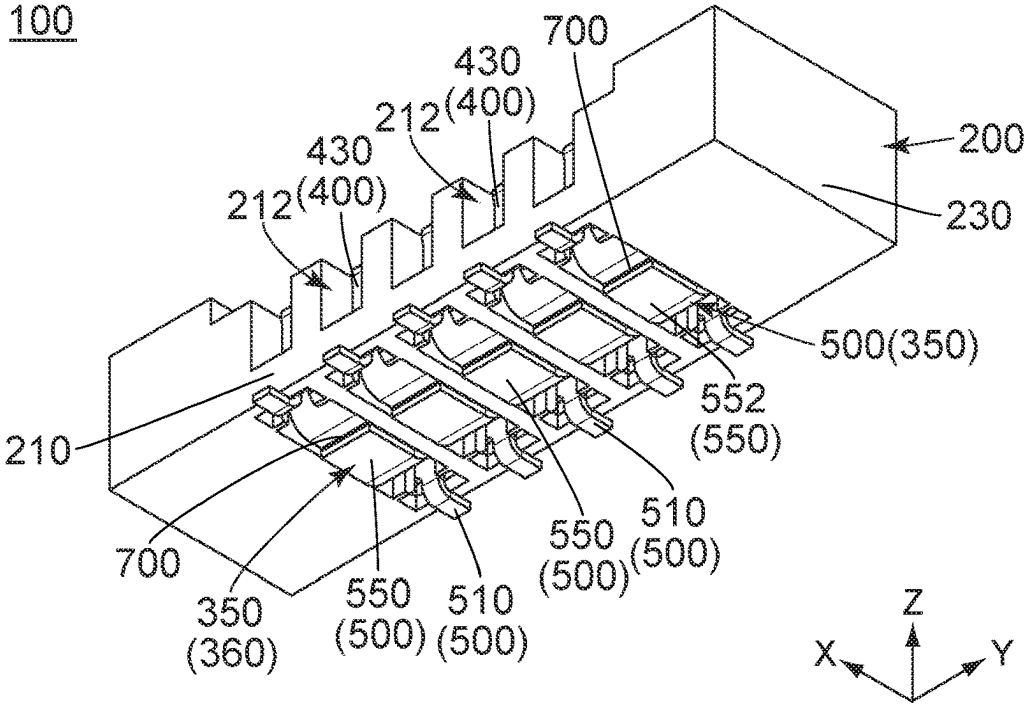
100
700
430
(400)
212
430
(400)
212
200
230
500(350)
552
(550)
210
700
350
(360)
550
(500)
510
(500)
550
(500)
510
(500)
Z
X
Y

FIG. 7

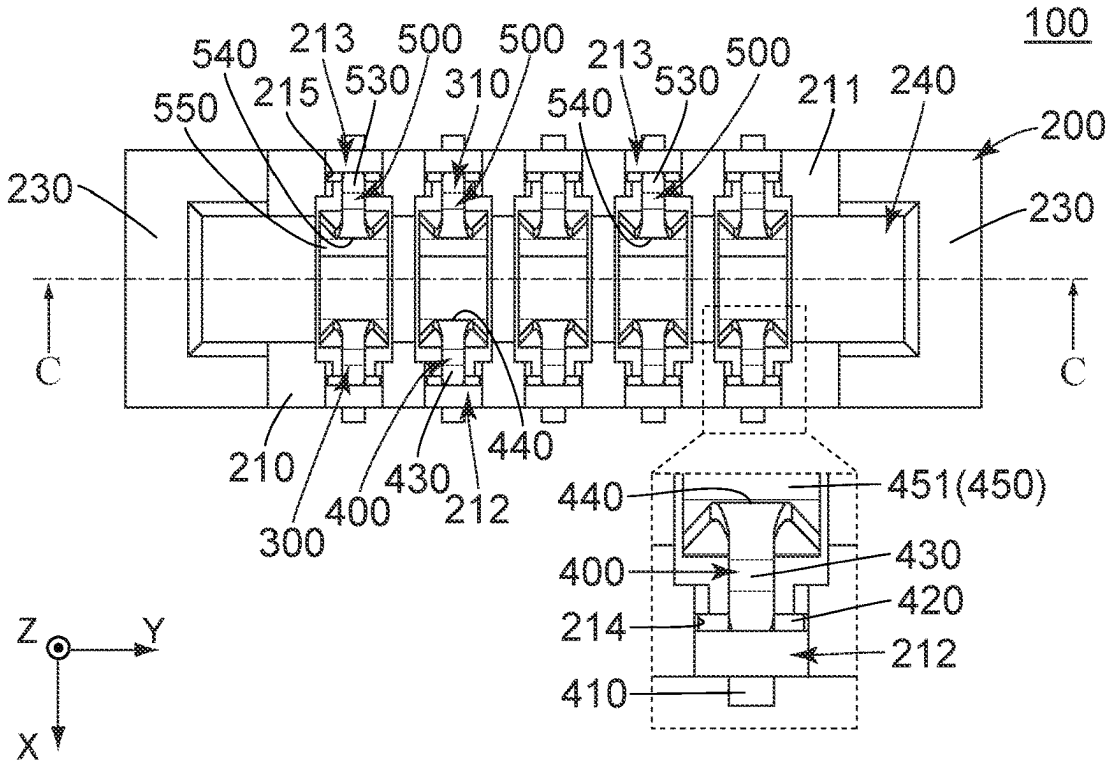
100
540
213
500
500
213
500
550
215
530
310
540
530
211
240
200
230
230
C
C
210
300
400
430
212
440
440
451(450)
400
430
420
214
212
410
Z
Y
X

FIG. 8

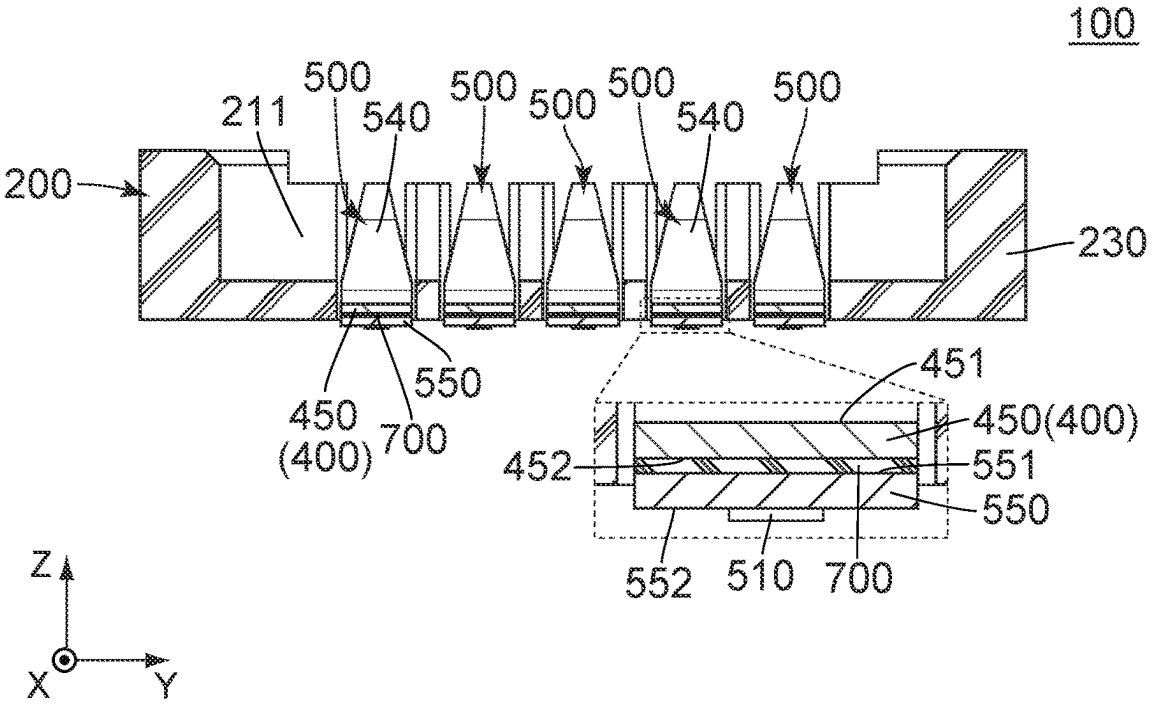
100
500
500
500
500
500
211
540
540
200
230
450
(400)
700
550
451
450(400)
452
551
550
552
510
700
Z
X
Y

FIG. 9

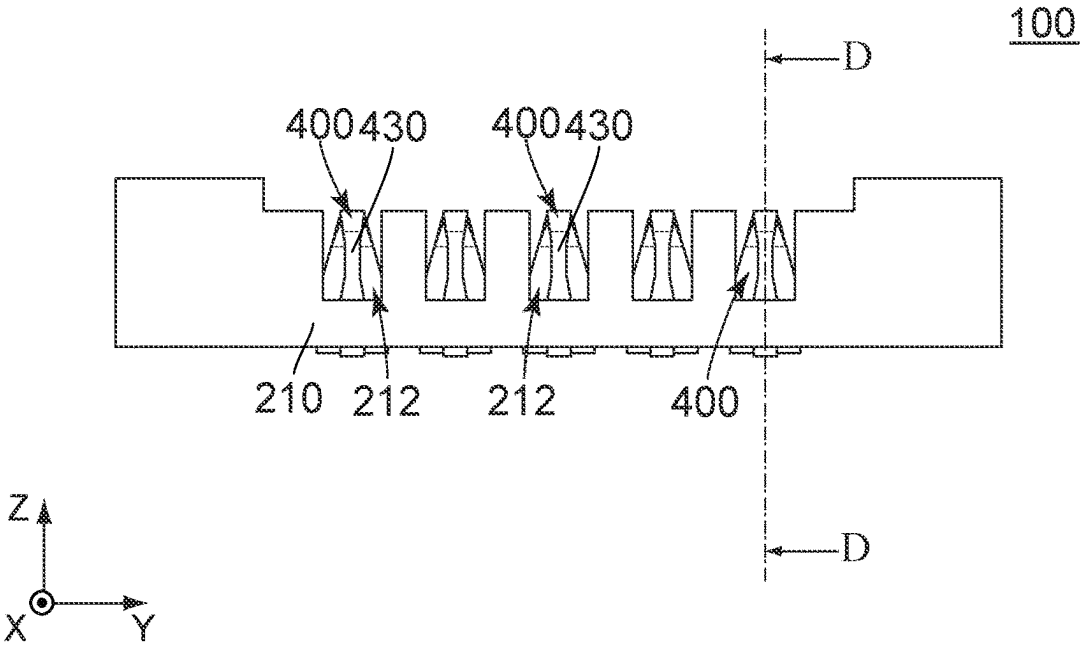
100
D
400430
400430
210
212
212
400
D
Z
X
Y

FIG. 10

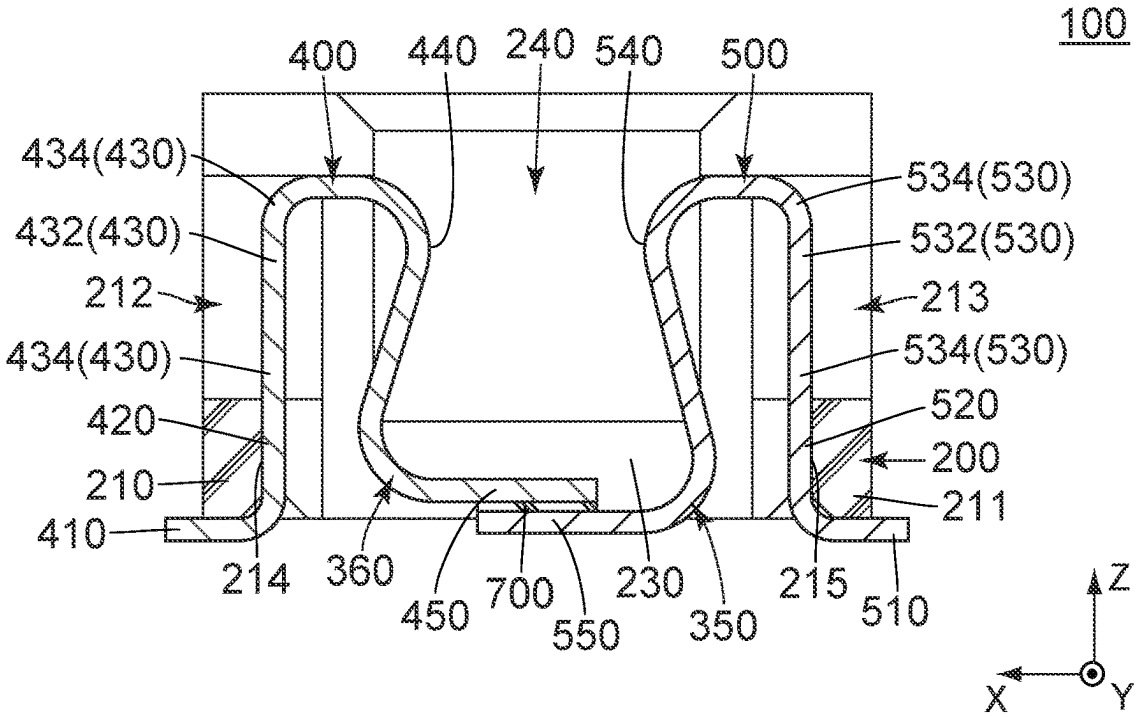
100
400
440
240
540
500
434(430)
432(430)
212
434(430)
420
210
410
534(530)
532(530)
213
534(530)
520
200
211
214
360
450
700
550
230
350
215
510
Z
X
Y

FIG. 11

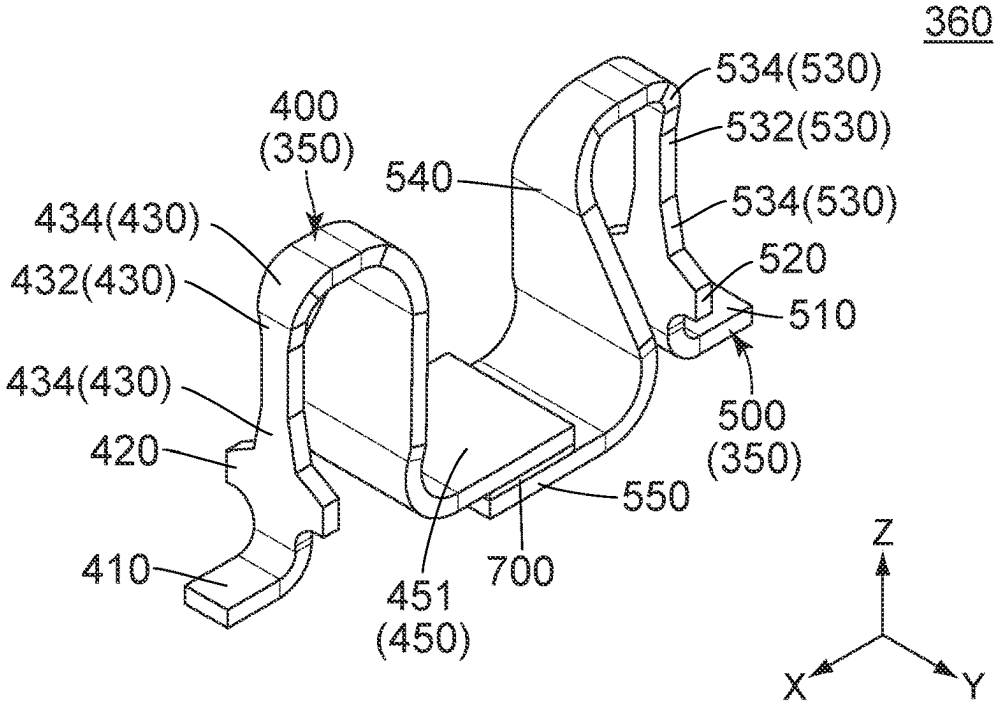
360
400
(350)
434(430)
432(430)
434(430)
420
410
540
534(530)
532(530)
534(530)
520
510
500
(350)
550
700
451
(450)
Z
X
Y

FIG. 12

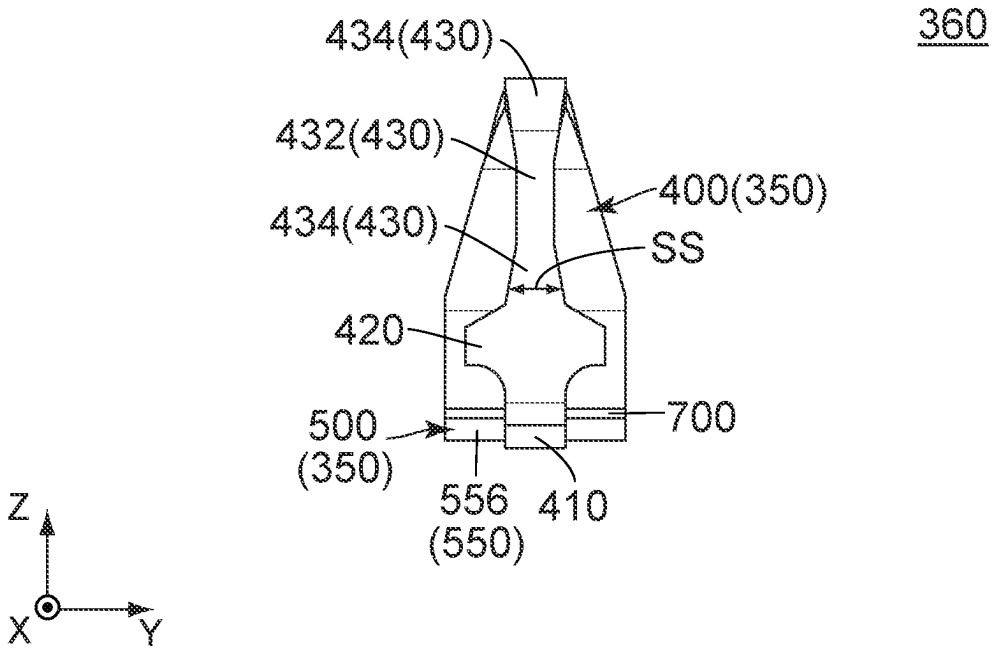
360
434(430)
432(430)
400(350)
434(430)
SS
420
500
(350)
700
556
(550)
410
Z
X
Y

FIG. 13

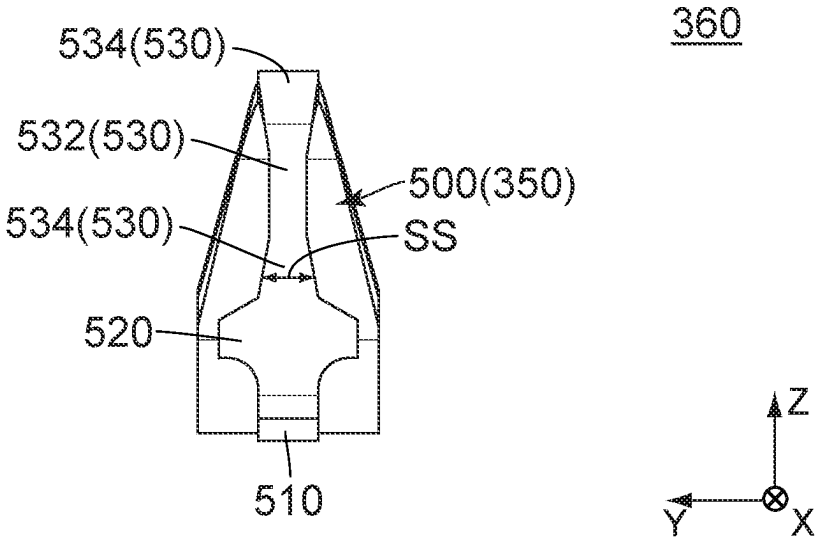
360
534(530)
532(530)
500(350)
534(530)
SS
520
510
Z
Y
X

FIG. 14

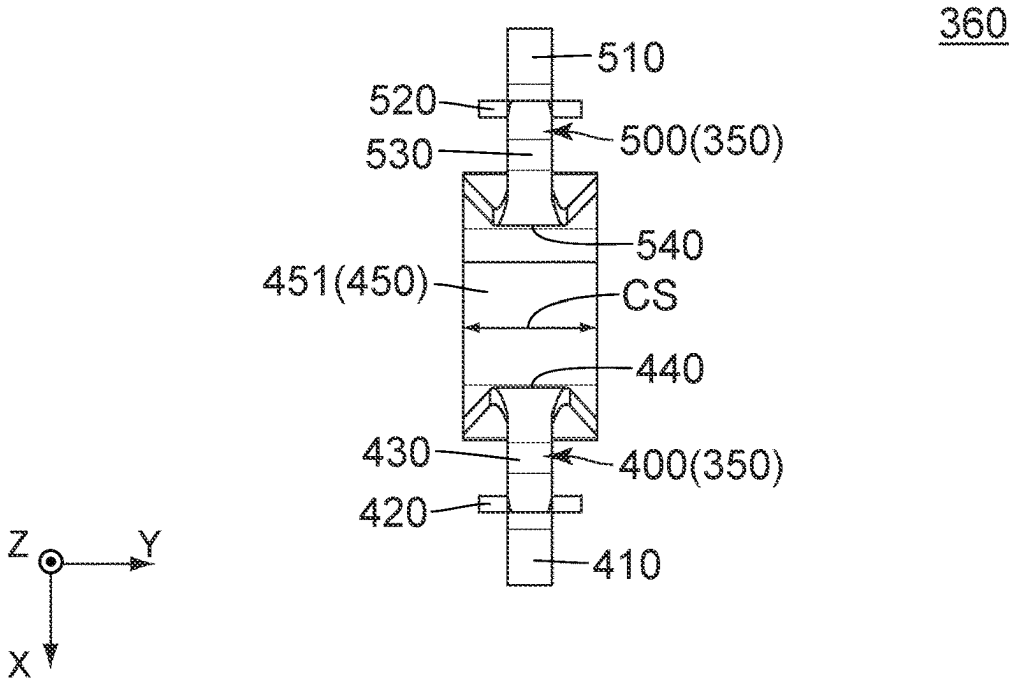
360
510
520
500(350)
530
540
451(450)
CS
440
430
400(350)
420
410
Z
Y
X

FIG. 15

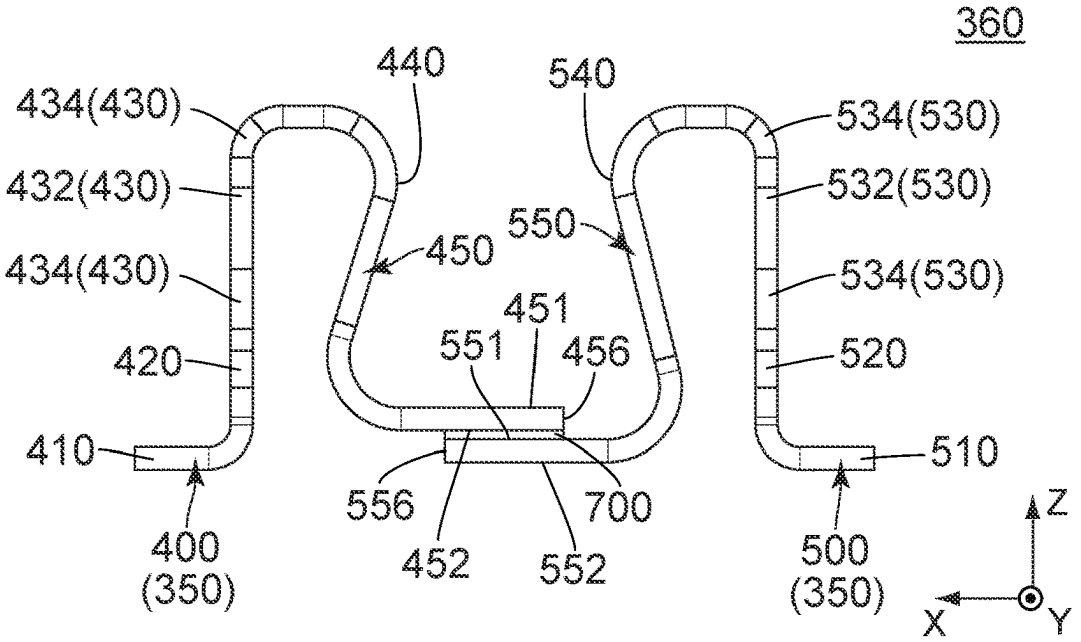
360
440
540
434(430)
534(530)
432(430)
532(530)
550
450
434(430)
534(530)
451
551
456
420
520
410
510
556
700
400
(350)
452
552
500
(350)
Z
X
Y

FIG. 16

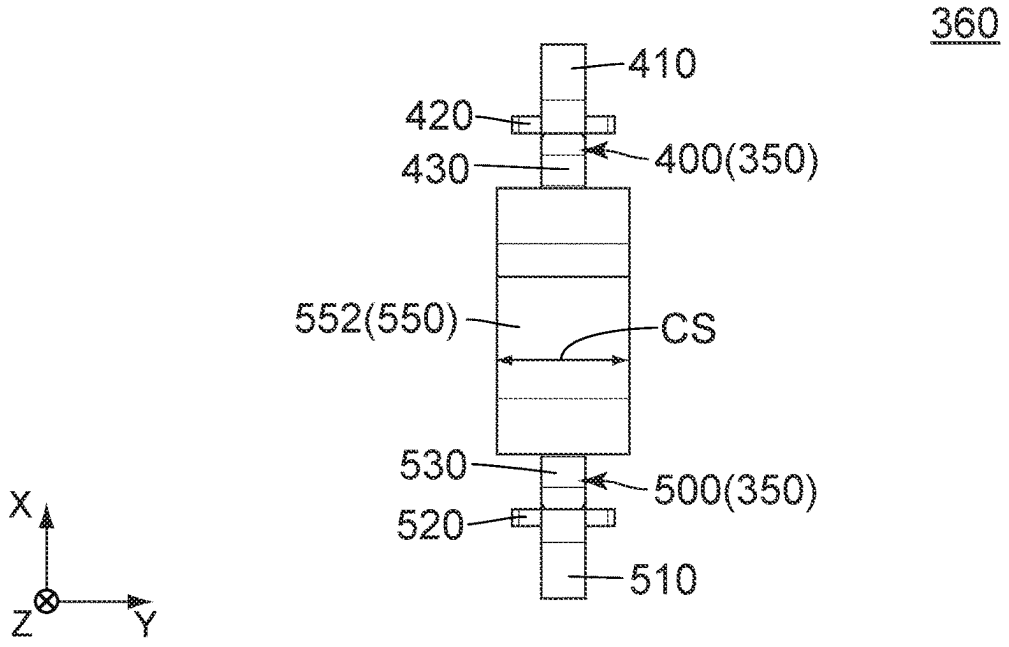
360
410
420
430
400(350)
552(550)
CS
530
500(350)
520
510
X
Z
Y

FIG. 17

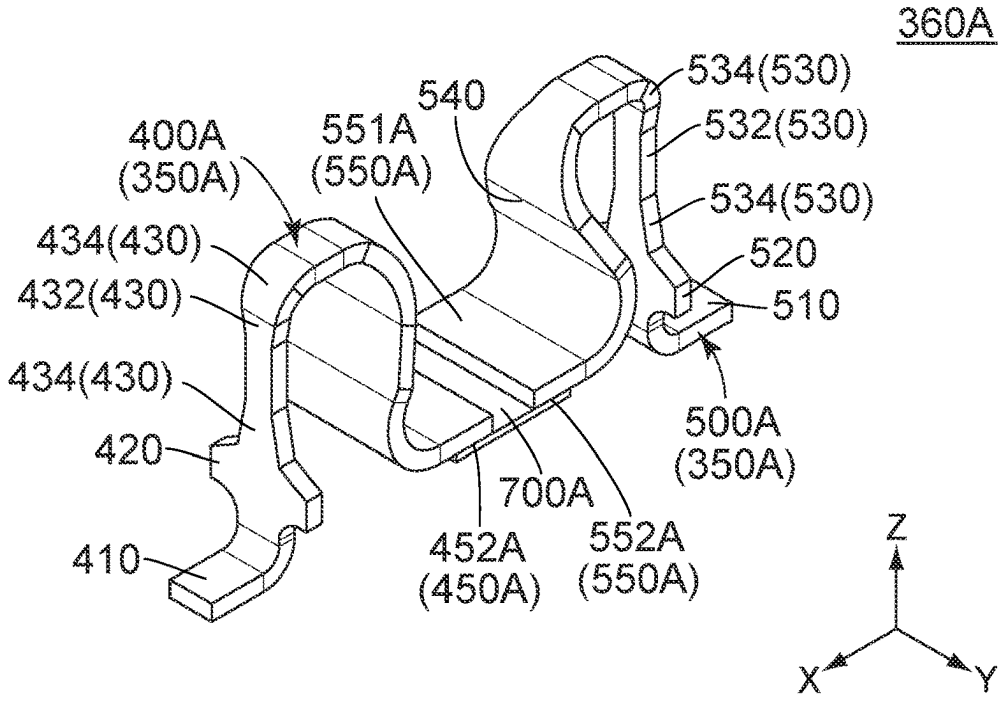
360A
534(530)
540
532(530)
400A
(350A)
551A
(550A)
534(530)
434(430)
520
432(430)
510
434(430)
500A
(350A)
420
700A
410
452A
(450A)
552A
(550A)
Z
X
Y

FIG. 18

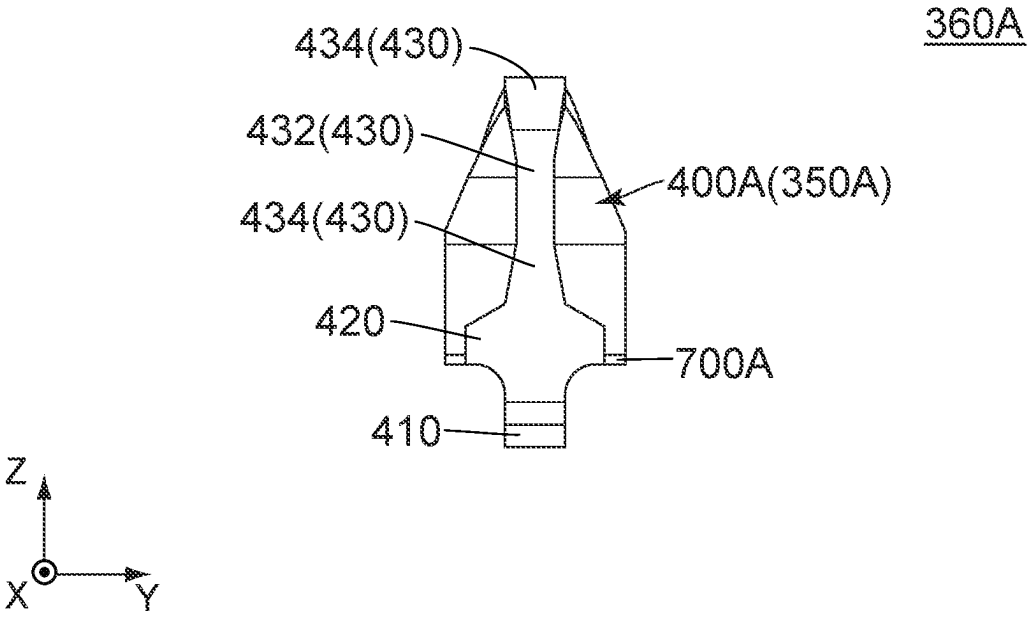
360A
434(430)
432(430)
400A(350A)
434(430)
420
700A
410
Z
X
Y

FIG. 19

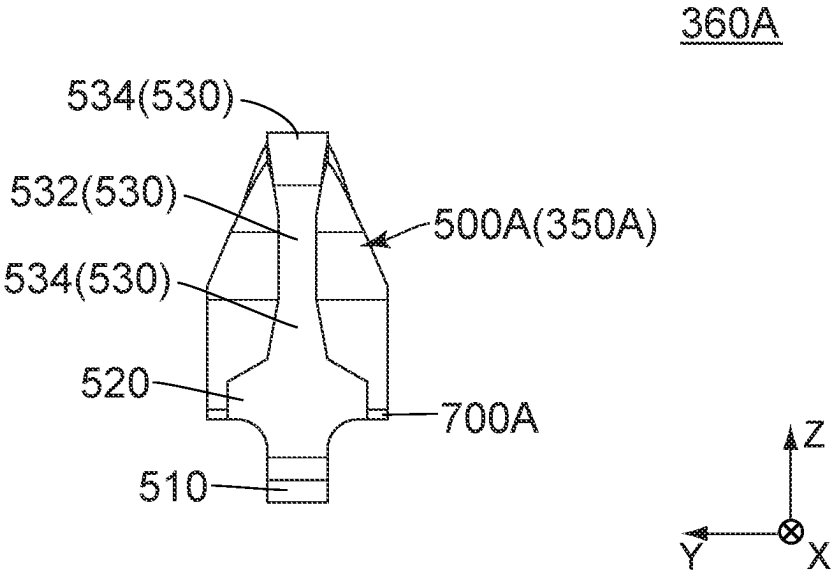
360A
534(530)
532(530)
500A(350A)
534(530)
520
700A
510
Z
Y
X

FIG. 20

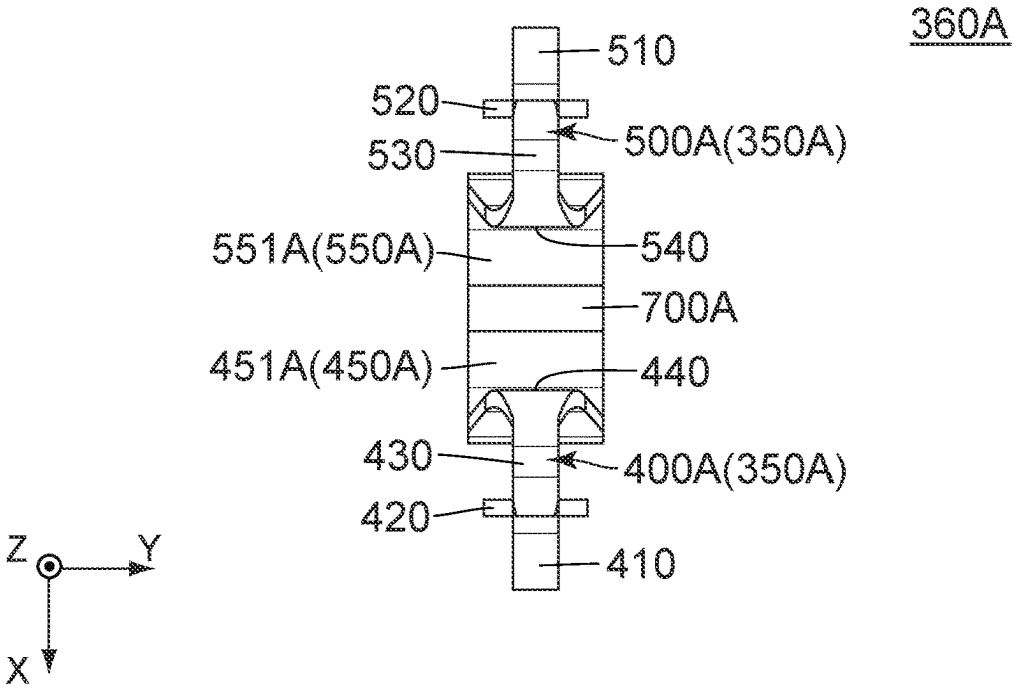
360A
510
520
500A(350A)
530
551A(550A)
540
700A
451A(450A)
440
430
400A(350A)
420
410
Z
Y
X

FIG. 21

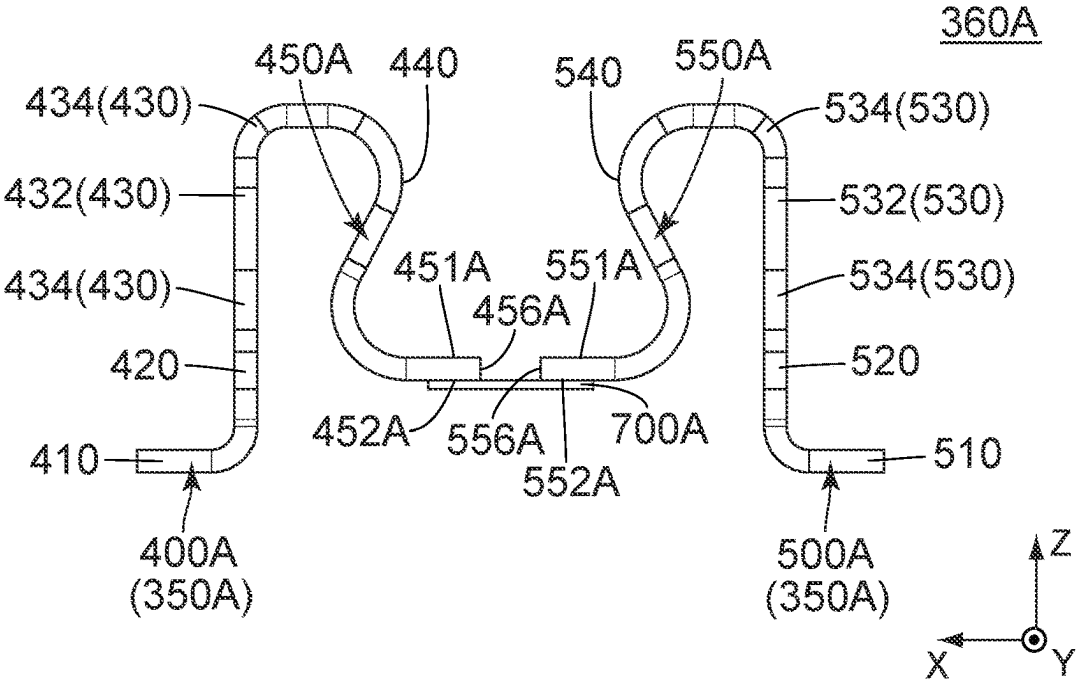
360A
450A
440
540
550A
434(430)
534(530)
432(430)
532(530)
434(430)
451A
551A
534(530)
456A
420
520
452A
556A
700A
410
510
552A
400A
(350A)
500A
(350A)
Z
X
Y

FIG. 22

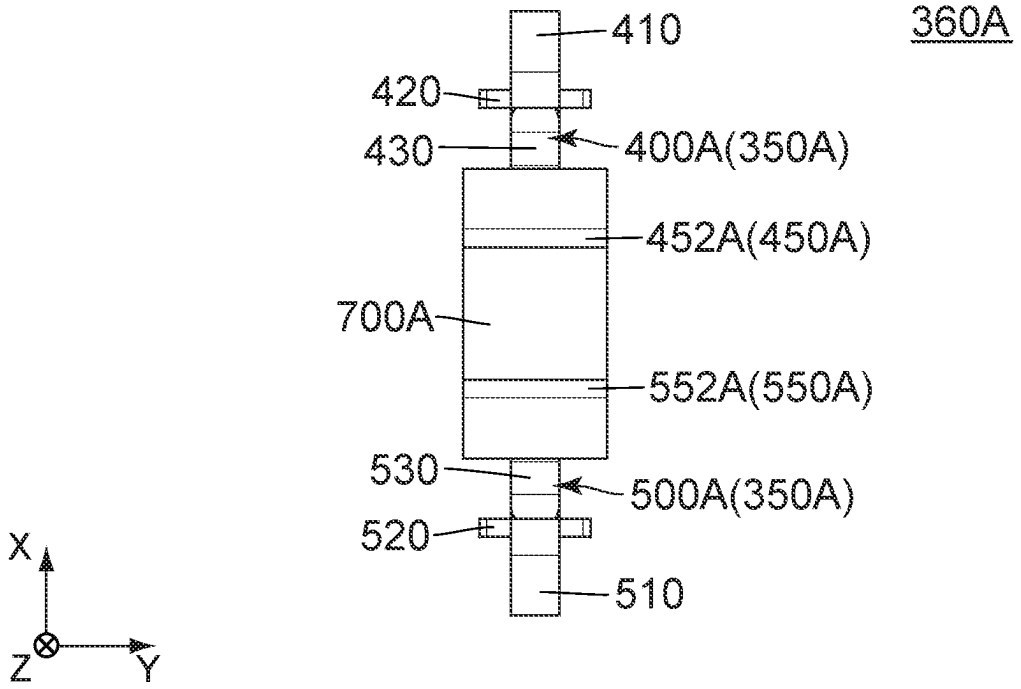
360A
410
420
430
400A(350A)
452A(450A)
700A
552A(550A)
530
500A(350A)
520
510
X
Z
Y

FIG. 23

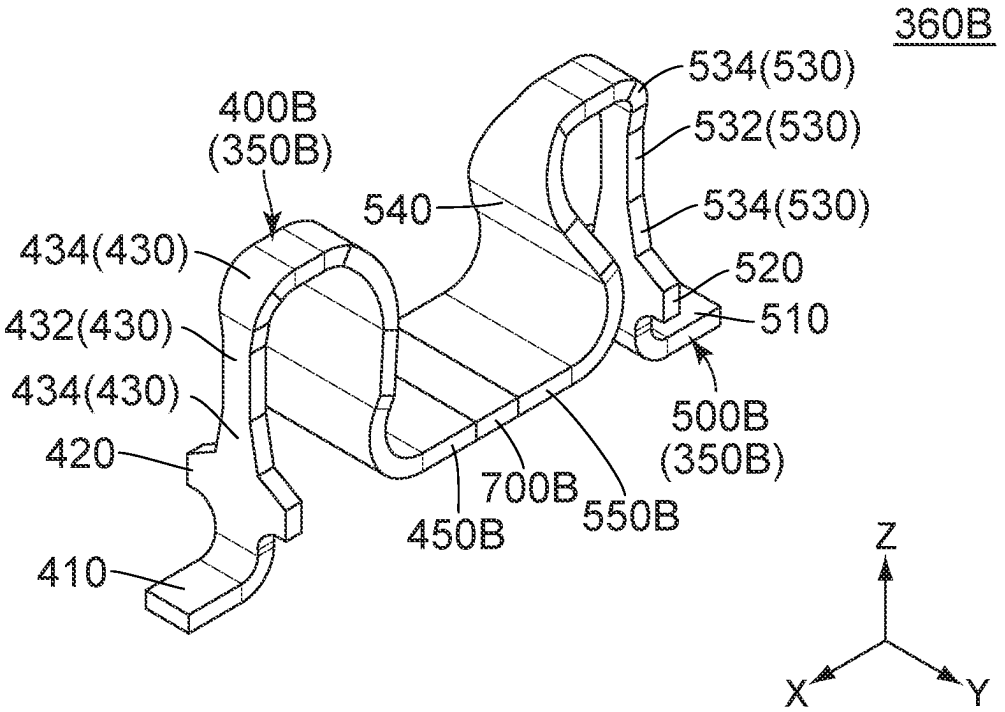
360B
534(530)
532(530)
534(530)
400B
(350B)
540
434(430)
520
510
432(430)
434(430)
500B
(350B)
420
700B
550B
450B
410
Z
X
Y

FIG. 24

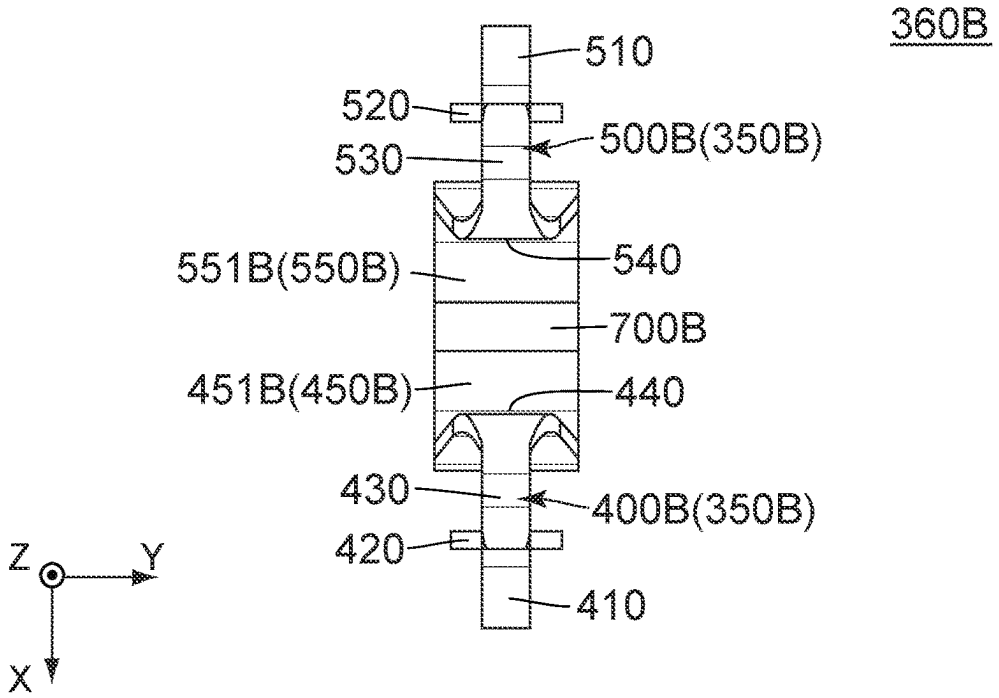
360B
510
520
500B(350B)
530
540
551B(550B)
700B
451B(450B)
440
430
400B(350B)
420
410
Z
Y
X

FIG. 25

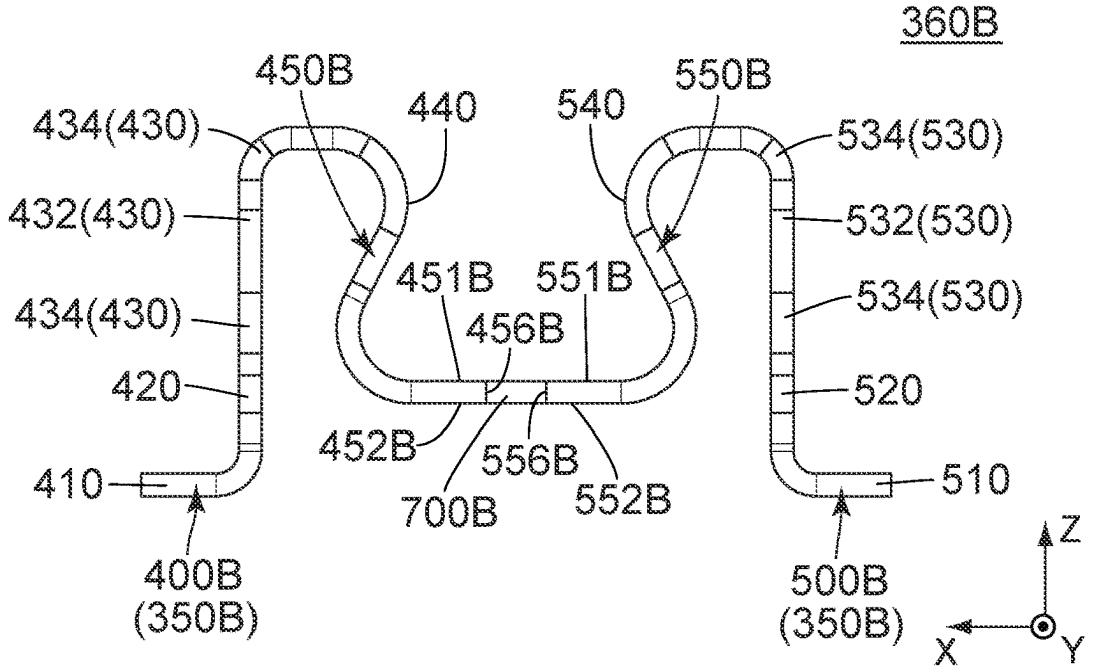
360B
450B
440
540
550B
434(430)
534(530)
432(430)
532(530)
451B
551B
434(430)
534(530)
456B
420
520
452B
556B
410
510
700B
552B
400B
(350B)
500B
(350B)
Z
X
Y

FIG. 26

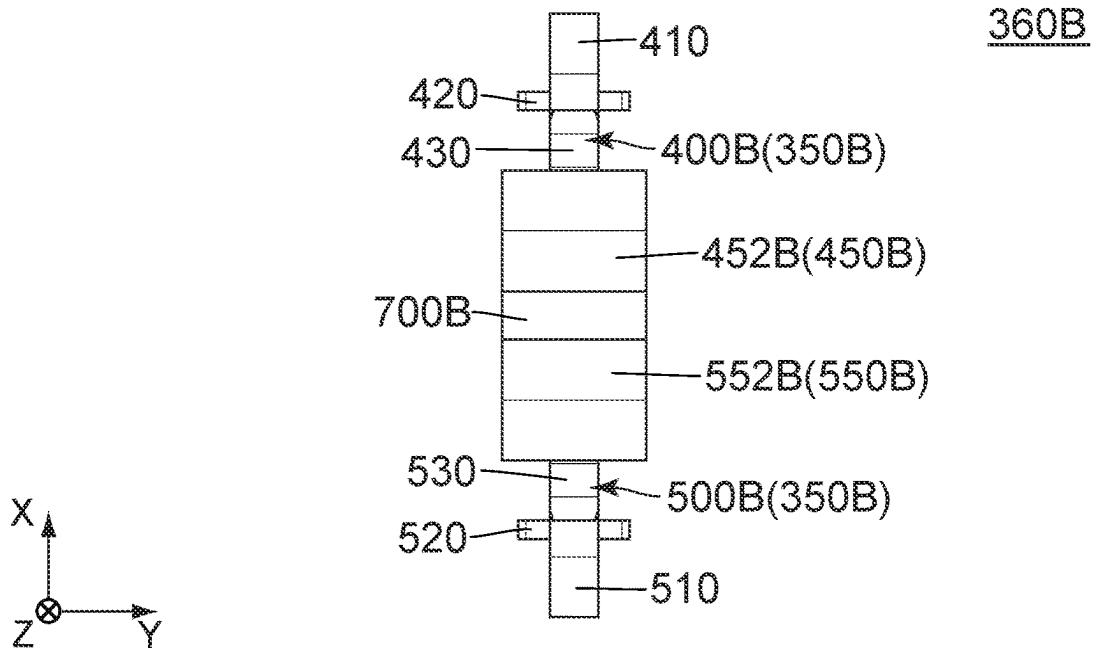
360B
410
420
430
400B(350B)
452B(450B)
700B
552B(550B)
530
500B(350B)
520
510
X
Z
Y

FIG. 27

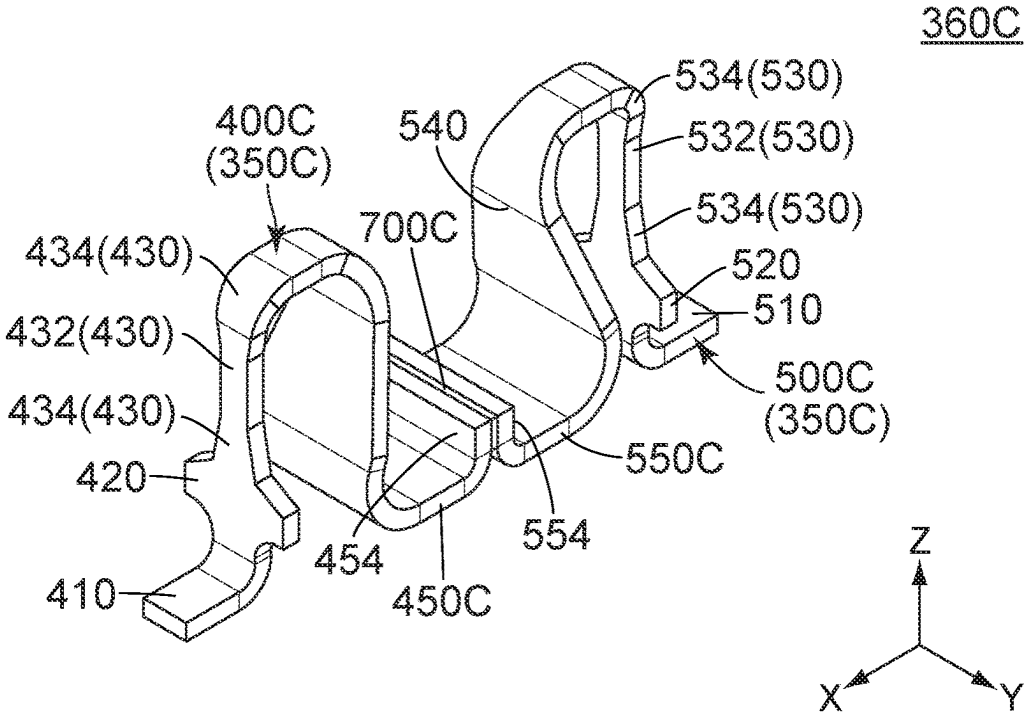
360C
534(530)
532(530)
534(530)
520
510
500C
(350C)
550C
554
450C
454
410
420
434(430)
432(430)
434(430)
400C
(350C)
540
700C
Z
X
Y

FIG. 28

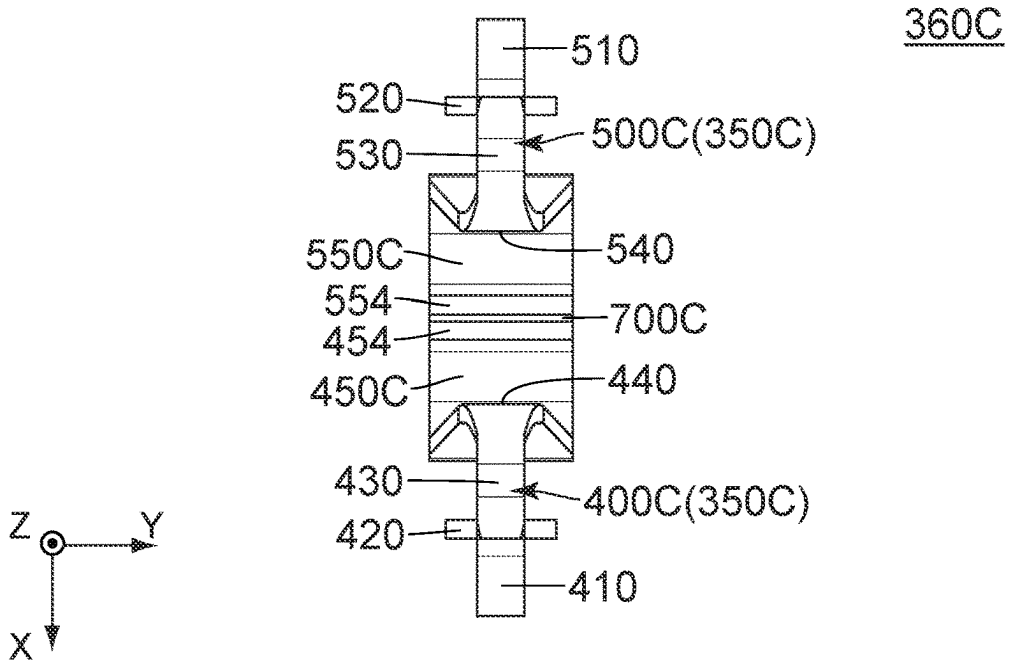
360C
510
520
500C(350C)
530
550C
540
554
700C
454
450C
440
430
400C(350C)
420
410
Z
Y
X

FIG. 29

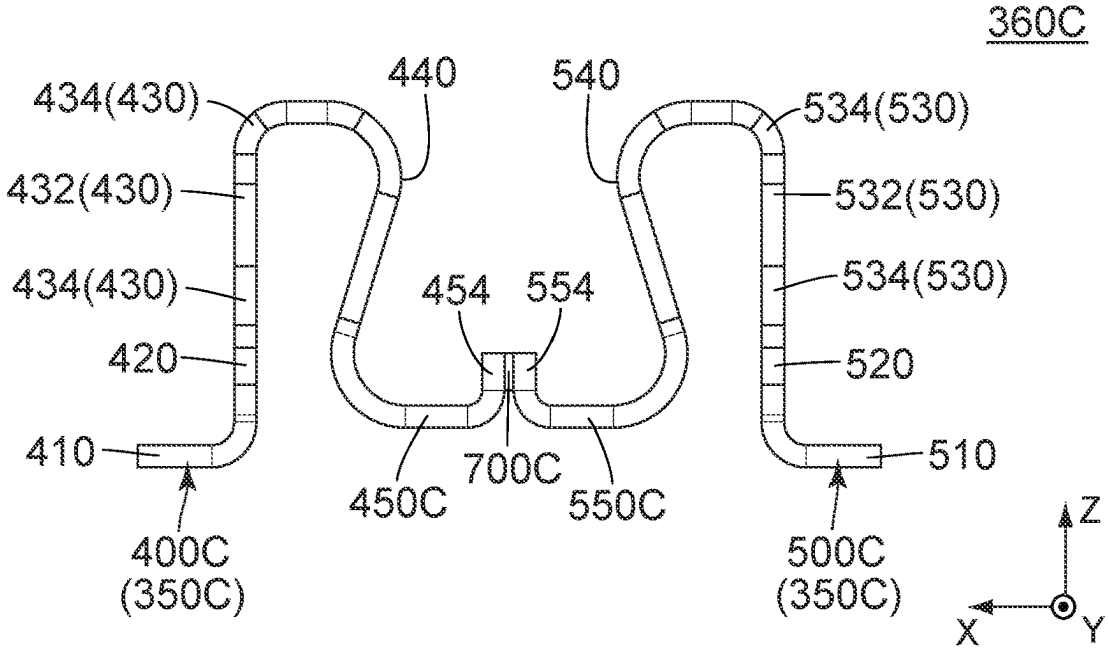
360C
434(430)
440
540
534(530)
432(430)
532(530)
434(430)
454
554
534(530)
420
520
410
510
450C
700C
550C
400C
(350C)
500C
(350C)
Z
X
Y

FIG. 30

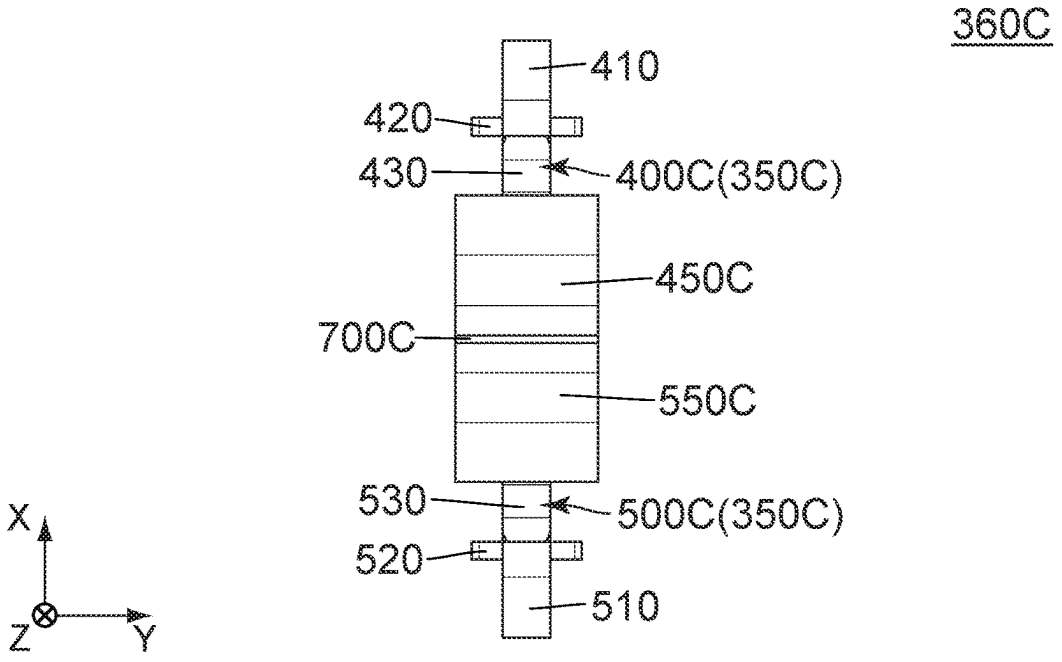
360C
410
420
430
400C(350C)
450C
700C
550C
530
500C(350C)
520
510
X
Z
Y

FIG. 31

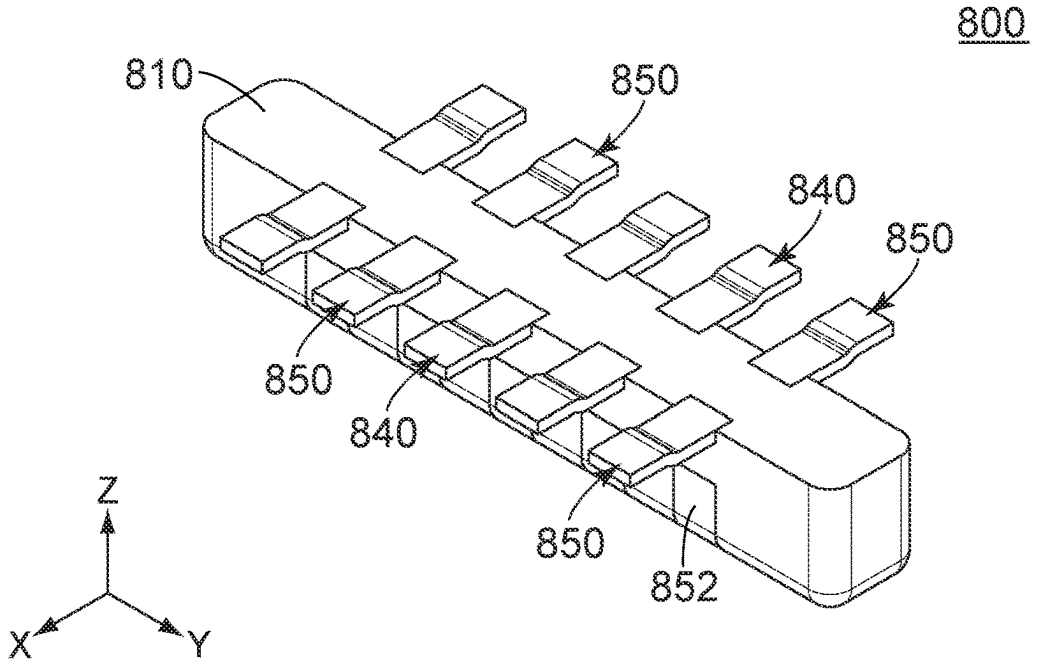
800
810
850
840
850
850
840
850
852
Z
X
Y

FIG. 32

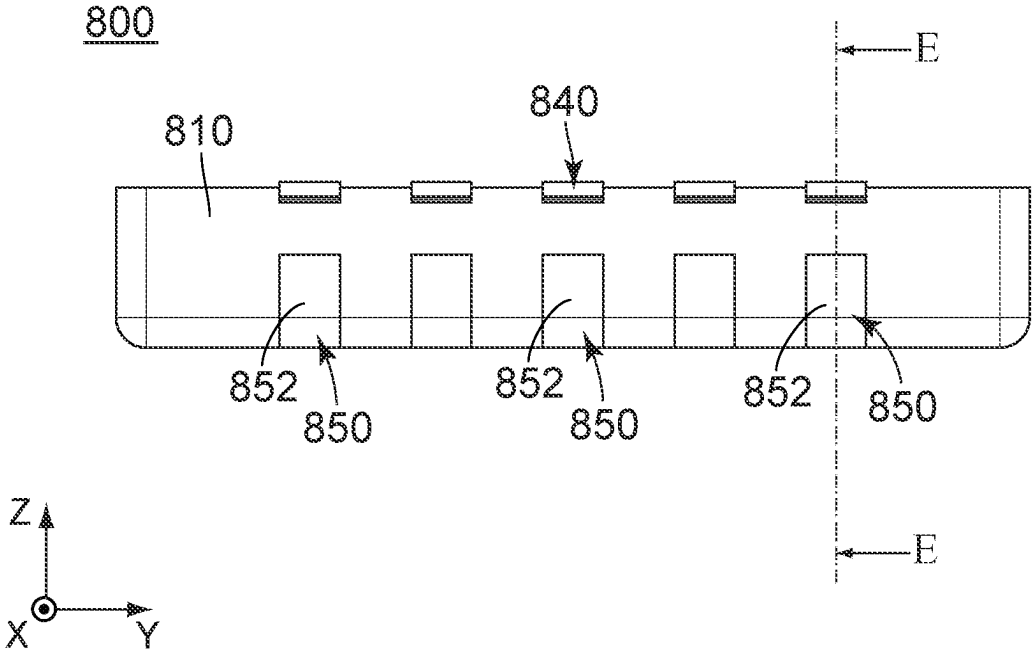
800
E
840
810
852
850
852
850
852
850
E
Z
X
Y

FIG. 33

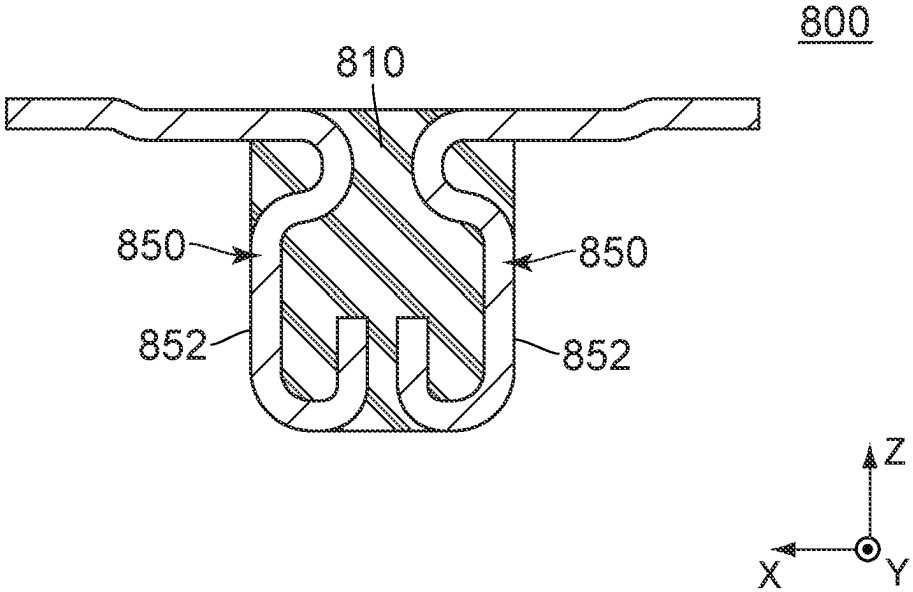
800
810
850
850
852
852
Z
X
Y

FIG. 34

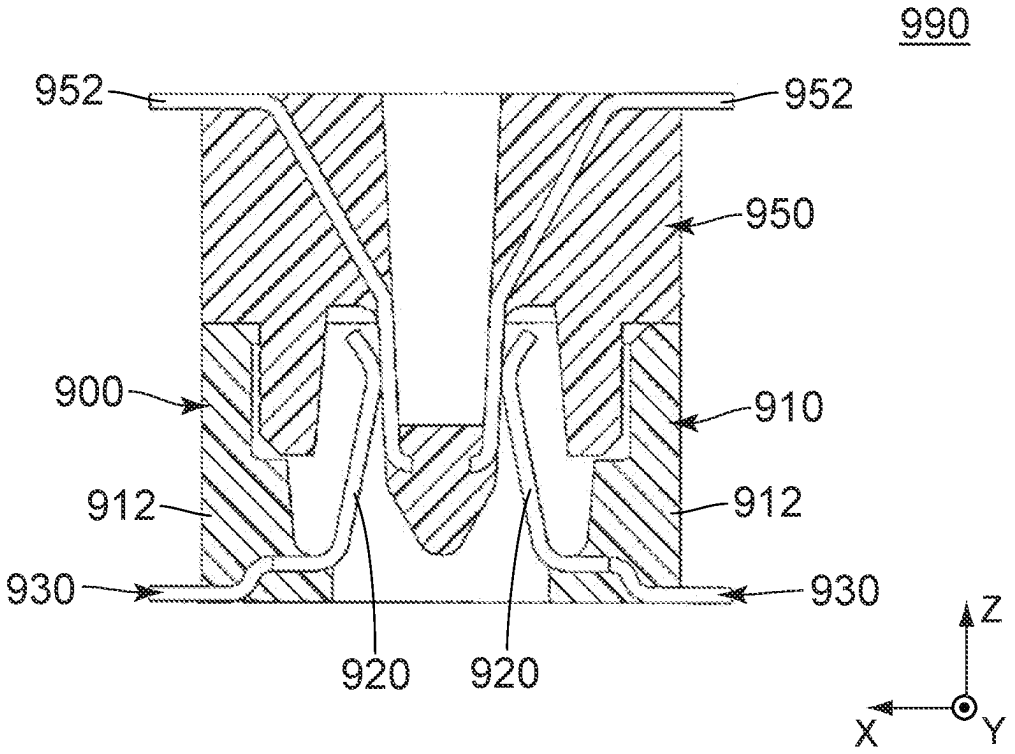

FIG. 35
PRIOR ART

CONNECTOR

CROSS REFERENCE TO RELATED APPLICATIONS

This application is based on and claims priority under 35 U.S.C. § 119 to Japanese Patent Applications No. JP 2022-065242 filed Apr. 11, 2022, the contents of which are incorporated herein in their entirety by reference.

BACKGROUND OF THE INVENTION

This invention relates to a connector comprising terminals which form two terminal rows.

Referring to FIG. 35, JP-A H10-134913 (Patent Document 1) discloses an assembly 990 comprising a connector 900 of this type and a mating connector 950. The connector 900 is mateable in a Z-direction with the mating connector 950 which has mating terminals 952. The connector 900 comprises a housing 910 and a plurality of terminals 920. The housing 910 has two side wall portions 912 and connection portions (not shown). Each of the connection portions connects the two side wall portions 912 with each other so as to maintain a constant distance between the two side wall portions 912 in an X-direction, or in a width direction. The terminals 920 form two terminal rows 930. The two terminal rows 930 are held by the two side wall portions 912, respectively. In each of the two terminal rows 930, the terminals 920 are arranged in a Y-direction, or in a pitch direction.

If, for example, the mating connector 950 is moved relative to the connector 900 in a first orientation of the width direction under a mated state where the connector 900 and the mating connector 950 are mated with each other, one of the mating terminals 952 is pressed against one of the terminals 920 corresponding thereto and belonging to the terminal row 930 which is positioned at a first side of the connector 900 in the first orientation. In this case, there is a possibility that another one of the terminals 920 of the terminal row 930, which is positioned at a second side of the connector 900 in a second orientation opposite to the first orientation of the width direction, is moved away from another one of the mating terminals 952 corresponding thereto and thereby the contact between the terminal 920 of the terminal row 930 at the second side of the connector 900 and the mating terminal 952 corresponding thereto is not maintained. Specifically, a difference between contact force of the terminal 920 at the first side against the mating terminal 952 and contact force of the terminal 920 at the second side against the mating terminal 952 is produced when the mating connector 950 is moved in the width direction relative to the connector 900 under the mated state. Thus, the connector 900 of Patent Document 1 has a drawback that the terminals 920 and the mating terminals 950 might not be in reliable contact with each other in part when the mating connector 950 is moved in the width direction relative to the connector 900 under the mated state.

SUMMARY OF THE INVENTION

It is therefore an object of the present invention to provide a connector which ensures reliable contact between terminals and mating terminals when a mating connector is moved in a width direction relative to the connector under a mated state where the connector and the mating connector are mated with each other.

One aspect of the present invention provides a connector comprising a housing, a plurality of terminals and a plurality of coupling portions. The housing has two side wall portions and a connection portion. The connection portion connects the two side wall portions with each other so as to maintain a constant distance between the two side wall portions in a width direction. The terminals form two terminal rows. The two terminal rows are held by the two side wall portions, respectively. In each of the two terminal rows, the terminals are arranged in a pitch direction perpendicular to the width direction. The terminals of one of the two terminal rows respectively correspond to the terminals of a remaining one of the two terminal rows. Each of the terminals has a press-fit portion, a supporting portion, a contact point and a coupled portion. The press-fit portion is press-fit into the side wall portion. The supporting portion extends from the press-fit portion. The contact point is supported by the supporting portion. The contact point of each of the terminals of the one of the terminal rows faces the contact point of the corresponding terminal of the remaining one of the terminal rows in the width direction. The coupled portion extends from the contact point. Each of the coupling portions is made of insulator. Each of the coupling portions couples the coupled portion of the terminal of the one of the terminal rows with the coupled portion of the corresponding terminal of the remaining one of the terminal rows in a direction perpendicular to the pitch direction.

The connector of the present invention is configured as follows: the connector comprises the plurality of terminals and the plurality of coupling portions each made of insulator; the terminals form the two terminal rows; the terminals of the one of the two terminal rows respectively correspond to the terminals of the remaining one of the two terminal rows; each of the terminals has the coupled portion; and each of the coupling portions couples the coupled portion of the terminal of the one of the two terminal rows with the coupled portion of the corresponding terminal of the remaining one of the two terminal rows in the direction perpendicular to the pitch direction. In other words, the connector of the present invention is configured so that the coupled portion of the terminal of the one of the two terminal rows and the coupled portion of the corresponding terminal of the remaining one of the two terminal rows are coupled with each other in the direction perpendicular to the pitch direction by the coupling portion made of insulator. This enables the connector of the present invention to be configured as follows: in a case where a mating connector is moved relative to the connector in a first orientation of the width direction under a mated state where the connector and the mating connector are mated with each other, one of mating terminals is pressed against one of the terminals corresponding thereto and belonging to the terminal row which is positioned at a first side of the connector in the first orientation; and, in this case, another one of the terminals of the terminal row, which is positioned at a second side of the connector in a second orientation opposite to the first orientation of the width direction, is moved in the first orientation and thereby the contact between the terminal of the terminal row at the second side of the connector and another one of the mating terminals corresponding thereto is also maintained. In other words, the connector of the present invention can ensure reliable contact between the terminals and the mating terminals when the mating connector is moved in the width direction relative to the connector under the mated state where the connector and the mating connector are mated with each other.

An appreciation of the objectives of the present invention and a more complete understanding of its structure may be had by studying the following description of the preferred embodiment and by referring to the accompanying drawings.

BRIEF DESCRIPTION OF THE DRAWINGS

FIG. **1** is a perspective view showing an assembly according to an embodiment of the present invention.

FIG. **2** is a top view showing the assembly of FIG. **1**.

FIG. **3** is a cross-sectional view showing the assembly of FIG. **2**, taken along line A-A.

FIG. **4** is a front view showing the assembly of FIG. **1**.

FIG. **5** is a cross-sectional view showing the assembly of FIG. **4**, taken along line B-B.

FIG. **6** is an upper, perspective view showing a connector which is included in the assembly of FIG. **1**.

FIG. **7** is a lower, perspective view showing the connector of FIG. **6**.

FIG. **8** is a top view showing the connector of FIG. **6**.

FIG. **9** is a cross-sectional view showing the connector of FIG. **8**, taken along line C-C.

FIG. **10** is a front view showing the connector of FIG. **6**.

FIG. **11** is a cross-sectional view showing the connector of FIG. **10**, taken along line D-D.

FIG. **12** is a perspective view showing a contact structure which is included in the connector of FIG. **6**.

FIG. **13** is a front view showing the contact structure of FIG. **12**.

FIG. **14** is a rear view showing the contact structure of FIG. **12**.

FIG. **15** is a top view showing the contact structure of FIG. **12**.

FIG. **16** is a side view showing the contact structure of FIG. **12**.

FIG. **17** is a bottom view showing the contact structure of FIG. **12**.

FIG. **18** is a perspective view showing a contact structure which is included in a first modification of the connector of FIG. **6**.

FIG. **19** is a front view showing the contact structure of FIG. **18**.

FIG. **20** is a rear view showing the contact structure of FIG. **18**.

FIG. **21** is a top view showing the contact structure of FIG. **18**.

FIG. **22** is a side view showing the contact structure of FIG. **18**.

FIG. **23** is a bottom view showing the contact structure of FIG. **18**.

FIG. **24** is a perspective view showing a contact structure which is included in a second modification of the connector of FIG. **6**.

FIG. **25** is a top view showing the contact structure of FIG. **24**.

FIG. **26** is a side view showing the contact structure of FIG. **24**.

FIG. **27** is a bottom view showing the contact structure of FIG. **24**.

FIG. **28** is a perspective view showing a contact structure which is included in a third modification of the connector of FIG. **6**.

FIG. **29** is a top view showing the contact structure of FIG. **28**.

FIG. **30** is a side view showing the contact structure of FIG. **28**.

FIG. **31** is a bottom view showing the contact structure of FIG. **28**.

FIG. **32** is a perspective view showing a mating connector which is included in the assembly of FIG. **1**.

FIG. **33** is a front view showing the mating connector of FIG. **32**.

FIG. **34** is a cross-sectional view showing the mating connector of FIG. **33**, taken along line E-E.

FIG. **35** is a cross-sectional view showing an assembly of Patent Document 1. In the figure, a connector and a mating connector are in a mated state where the connector and the mating connector are mated with each other.

While the invention is susceptible to various modifications and alternative forms, specific embodiments thereof are shown by way of example in the drawings and will herein be described in detail. It should be understood, however, that the drawings and detailed description thereto are not intended to limit the invention to the particular form disclosed, but on the contrary, the intention is to cover all modifications, equivalents and alternatives falling within the spirit and scope of the present invention as defined by the appended claims.

DETAILED DESCRIPTION

As shown in FIG. **5**, an assembly **10** according to an embodiment of the present invention comprises a connector **100** and a mating connector **800**.

Referring to FIG. **5**, the mating connector **800** is mateable with the connector **100** in an up-down direction. In the present embodiment, the up-down direction is a Z-direction. Specifically, it is assumed that upward is a positive Z-direction while downward is a negative Z-direction.

As shown in FIG. **32**, the mating connector **800** of the present embodiment comprises a mating housing **810** and a plurality of mating terminals **850**.

Referring to FIG. **32**, the mating housing **810** of the present embodiment is made of insulator. The mating housing **810** extends in a pitch direction perpendicular to the up-down direction. In the present embodiment, the pitch direction is a Y-direction.

Referring to FIGS. **32** and **33**, the mating terminals **850** form two mating terminal rows **840**. The two mating terminal rows **840** are arranged in a width direction perpendicular to both the up-down direction and the pitch direction. In the present embodiment, the width direction is an X-direction. The width direction is also referred to as a front-rear direction. Specifically, it is assumed that the forward is a positive X-direction while rearward is a negative X-direction. The two mating terminal rows **840** are held by the mating housing **810**. In each of the two mating terminal rows **840**, the mating terminals **850** are arranged in the pitch direction. The mating terminals **850** of one of the two mating terminal rows **840** respectively correspond to the mating terminals **850** of a remaining one of the two mating terminal rows **840**. In the pitch direction, each of the mating terminals **850** of the one of the mating terminal rows **840** is positioned at a position same as a position of the corresponding mating terminal **850** of the remaining one of the mating terminal rows **840**.

As shown in FIG. **34**, each of the mating terminals **850** has a mating contact portion **852**. The mating contact portion **852** is exposed from the mating housing **810**. The mating contact portion **852** faces outward in the width direction. The mating contact portion **852** is a plane perpendicular to the width direction. The mating contact portion **852** of each of the mating terminals **850** of the mating terminal row **840**,

which is positioned at a front side of the mating connector **800** in the front-rear direction, faces forward in the front-rear direction. The mating contact portion **852** of each of the mating terminals **850** of the mating terminal row **840**, which is positioned at a rear side of the mating connector **800** in the front-rear direction, faces rearward in the front-rear direction.

Referring to FIG. **11**, the connector **100** of the present embodiment is configured to be mounted on a circuit board (not shown). The connector **100** comprises a housing **200**, a plurality of terminals **400**, **500** and a plurality of coupling portions **700**.

As shown in FIG. **8**, the housing **200** of the present embodiment has two side wall portions **210**, **211**, two connection portions **230** and a mating connector receiving portion **240**. However, the present invention is not limited thereto, but the number of the connection portion **230** may be one. Specifically, the housing **200** should have the two side wall portions **210**, **211** and the connection portion **230**.

As shown in FIG. **8**, each of the side wall portions **210**, **211** of the present embodiment extends in the pitch direction. The side wall portions **210**, **211** respectively define opposite ends of the housing **200** in the width direction. The two side wall portions **210**, **211** are arranged in the width direction, or in the front-rear direction. The side wall portion **210** is positioned forward of the side wall portion **211** in the front-rear direction.

As shown in FIG. **8**, the side wall portion **210** has a plurality of receiving portions **212** and a plurality of press-fit parts **214**.

Referring to FIGS. **6** and **11**, each of the receiving portions **212** of the present embodiment communicates with the outside of the housing **200** in the width direction. The receiving portions **212** correspond to the press-fit parts **214**, respectively. Each of the receiving portions **212** is positioned above the corresponding press-fit part **214** in the up-down direction. Each of the receiving portions **212** opens forward in the front-rear direction.

Referring to FIGS. **8** and **11**, each of the press-fit parts **214** of the present embodiment is a ditch which pierces the side wall portion **210** in the up-down direction.

As shown in FIGS. **8** and **11**, the side wall portion **211** has a plurality of receiving portions **213** and a plurality of press-fit parts **215**.

Referring to FIG. **11**, each of the receiving portions **213** of the present embodiment communicates with the outside of the housing **200** in the width direction. The receiving portions **213** correspond to the press-fit parts **215**, respectively. Each of the receiving portions **213** is positioned above the corresponding press-fit part **215** in the up-down direction. Each of the receiving portions **213** opens rearward in the front-rear direction.

Referring to FIGS. **8** and **11**, each of the press-fit parts **215** of the present embodiment is a ditch which pierces the side wall portion **211** in the up-down direction.

As shown in FIG. **8**, each of the connection portions **230** of the present embodiment extends in the width direction. The connection portions **230** respectively define opposite ends of the housing **200** in the pitch direction. The two connection portions **230** are arranged in the pitch direction. The connection portions **230** are respectively positioned at opposite ends of the side wall portion **210** in the pitch direction. The connection portions **230** are respectively positioned at opposite ends of the side wall portion **211** in the pitch direction. Each of the connection portions **230** connects the two side wall portions **210**, **211** with each other. More specifically, each of the connection portions **230** connects the two side wall portions **210**, **211** with each other so as to maintain a constant distance between the two side wall portions **210**, **211** in the width direction.

As shown in FIG. **11**, the mating connector receiving portion **240** of the present embodiment opens upward in the up-down direction. The mating connector receiving portion **240** is positioned between the side wall portions **210**, **211** in the width direction. As shown in FIG. **8**, the mating connector receiving portion **240** is positioned between the two connection portions **230** in the pitch direction. As shown in FIG. **5**, the mating connector receiving portion **240** receives a part of the mating connector **800** when the connector **100** and the mating connector **800** are mated with each other.

As shown in FIG. **8**, the terminals **400**, **500** of the present embodiment form two terminal rows **300**, **310**. Specifically, the terminals **400** of the present embodiment form a terminal row **300** while the terminals **500** of the present embodiment form a terminal row **310**. The two terminal rows **300**, **310** are arranged in the width direction, or in the front-rear direction. The terminals **400** of the terminal row **300** are arranged in the pitch direction perpendicular to the width direction. The terminals **500** of the terminal row **310** are arranged in the pitch direction perpendicular to the width direction. The terminal row **300** is held by the side wall portion **210** while the terminal row **310** is held by the side wall portion **211**. The terminals **400** of one of the two terminal rows **300**, **310**, or of the terminal row **300**, respectively correspond to the terminals **500** of a remaining one of the terminal rows **300**, **310**, or of the terminal row **310**. Referring to FIGS. **8** and **15**, the terminal **400** of the one of the terminal rows **300**, **310**, or of the terminal row **300**, and the corresponding terminal **500** of the remaining one of the terminal rows **300**, **310**, or of the terminal row **310**, form a terminal pair **350**. In the pitch direction, the terminal **400** of the one of the terminal rows **300**, **310**, or the terminal row **300**, is positioned at a position same as a position of the corresponding terminal **500** of the remaining one of the terminal rows **300**, **310**, or the terminal row **310**. That is, in each of the terminal pairs **350**, the two terminals **400** and **500** are positioned at the same position as each other in the pitch direction. Referring to FIG. **5**, when the connector **100** and the mating connector **800** are mated with each other, the terminals **400**, **500** are connected with the mating terminals **850**, respectively.

As shown in FIG. **8**, the terminals **400** form the terminal row **300**. The terminals **400** are arranged in the pitch direction. The terminals **400** are held by the side wall portion **210**. The terminals **400** correspond to the terminals **500**, respectively. The terminals **400** correspond to the receiving portions **212** and the press-fit parts **214**, respectively.

As shown in FIG. **16**, each of the terminals **400** is manufactured by punching out a blank from a metal plate, followed by bending the blank. In other words, each of the terminals **400** has a uniform thickness. Each of the terminals **400** has a fixed portion **410**, a press-fit portion **420**, a supporting portion **430**, a contact point **440** and a coupled portion **450**.

As shown in FIG. **16**, the fixed portion **410** of the present embodiment defines an outer end of the terminal **400** in the width direction. Specifically, the fixed portion **410** defines a front end of the terminal **400** in the front-rear direction. The fixed portion **410** defines a lower end of the terminal **400** in the up-down direction. The fixed portion **410** is fixed to a pad (not shown) of the circuit board when the connector **100** is mounted on the circuit board.

As shown in FIG. **16**, the press-fit portion **420** of the present embodiment extends upward in the up-down direction from an inner end of the fixed portion **410** in the width

direction. Specifically, the press-fit portion **420** extends upward in the up-down direction from a rear end of the fixed portion **410** in the front-rear direction. As shown in FIG. **11**, the press-fit portion **420** is press-fit into the side wall portion **210**. More specifically, the press-fit portion **420** of the terminal **400** is press-fit into the corresponding press-fit part **214** of the side wall portion **210**.

As shown in FIG. **16**, the supporting portion **430** of the present embodiment extends from the press-fit portion **420**. More specifically, the supporting portion **430** extends upward in the up-down direction from an upper end of the press-fit portion **420**, and is bent so that it extends inward in the width direction, and is further bent so that it extends downward in the up-down direction. Specifically, the supporting portion **430** extends upward in the up-down direction from the upper end of the press-fit portion **420**, and is bent so that it extends rearward in the front-rear direction, and is further bent so that it extends downward in the up-down direction. The supporting portion **430** is resiliently deformable. As understood from FIGS. **5** and **11**, the receiving portion **212** partially receives the supporting portion **430** when the supporting portion **430** is resiliently deformed. Specifically, each of the receiving portions **212** partially receives the supporting portion **430** of the corresponding terminal **400** when the supporting portion **430** of the corresponding terminal **400** is resiliently deformed. The supporting portion **430** of the terminal **400** is positioned between the corresponding receiving portion **212** and the contact point **440** in the width direction. The supporting portion **430** of the terminal **400** is positioned inward of the corresponding receiving portion **212** in the width direction. Specifically, the supporting portion **430** of the terminal **400** is positioned rearward of the corresponding receiving portion **212** in the front-rear direction.

As shown in FIG. **13**, the supporting portion **430** has a narrow portion **432** and two wide portions **434**. Specifically, in the pitch direction, the narrow portion **432** has a size smaller than an average size of the supporting portion **430**. Additionally, in the pitch direction, each of the wide portions **434** has a size greater than the average size of the supporting portion **430**.

As shown in FIG. **13**, the narrow portion **432** of the present embodiment is positioned between the two wide portions **434** in the up-down direction. The size of the narrow portion **432** in the pitch direction is smaller than the size of any of the wide portions **434** in the pitch direction. As shown in FIG. **16**, the narrow portion **432** is nearer to the contact point **440** than any of the wide portions **434** is in the up-down direction.

As shown in FIG. **13**, in the present embodiment, one of the wide portions **434** is coupled with the press-fit portion **420**. Specifically, a lower end of the one of the wide portions **434** is coupled with an upper end of the press-fit portion **420**. The one of the wide portions **434** couples the narrow portion **432** and the press-fit portion **420** with each other. A remaining one of the wide portions **434** is coupled with the narrow portion **432**. Specifically, a lower end of the remaining one of the wide portions **434** is coupled with an upper end of the narrow portion **432**. The size of each of the wide portions **434** in the pitch direction is greater than the size of the narrow portion **432** in the pitch direction. As shown in FIG. **16**, each of the wide portions **434** is farther away from the contact point **440** than the narrow portion **432** is in the up-down direction.

Referring to FIG. **5**, the contact point **440** of the present embodiment is brought into contact with the mating contact portion **852** when the connector **100** and the mating connector **800** are mated with each other. As shown in FIG. **16**, the contact point **440** is supported by the supporting portion **430**. Specifically, the contact point **440** is resiliently supported by the supporting portion **430**. Since the supporting portion **430** is resiliently deformable as described above, the contact point **440** is movable in the width direction. The contact point **440** faces inward in the width direction. Specifically, the contact point **440** faces rearward in the front-rear direction.

As shown in FIG. **16**, the coupled portion **450** of the present embodiment extends from the contact point **440**. The coupled portion **450** extends downward in the up-down direction and outward in the width direction from the contact point **440**, and is bent so that it extends inward in the width direction. Specifically, the coupled portion **450** extends downward in the up-down direction and forward in the front-rear direction from the contact point **440**, and is bent so that it extends rearward in the front-rear direction. The coupled portion **450** defines an inner end of the terminal **400** in the width direction. Specifically, the coupled portion **450** defines a rear end of the terminal **400** in the front-rear direction. Referring to FIGS. **13** and **15**, in each of the terminals **400**, a size SS of the supporting portion **430** in the pitch direction is smaller than a size CS of the coupled portion **450** in the pitch direction. As shown in FIG. **8**, a part of the coupled portion **450** is visible when the connector **100** is viewed from above.

As shown in FIG. **16**, the coupled portion **450** has an upper surface **451** and a lower surface **452** in the up-down direction perpendicular to both the width direction and the pitch direction. Additionally, the coupled portion **450** has an end surface **456** in the width direction.

As shown in FIG. **16**, the upper surface **451** of the present embodiment faces upward in the up-down direction. The upper surface **451** is a surface intersecting with the up-down direction. As shown in FIG. **8**, the upper surface **451** is visible when the connector **100** is viewed from above.

As shown in FIG. **16**, the lower surface **452** of the present embodiment faces downward in the up-down direction. The lower surface **452** is a surface intersecting with the up-down direction.

As shown in FIG. **16**, the end surface **456** of the present embodiment faces inward in the width direction. Specifically, the end surface **456** faces rearward in the front-rear direction. The end surface **456** is a surface intersecting with the width direction. The end surface **456** defines the inner end of the terminal **400** in the width direction. Specifically, the end surface **456** defines the rear end of the terminal **400** in the front-rear direction.

As shown in FIG. **8**, the terminals **500** form the terminal row **310**. The terminals **500** are arranged in the pitch direction. The terminals **500** are held by the side wall portion **211**. The terminals **500** correspond to the receiving portions **213** and the press-fit parts **215**, respectively.

As shown in FIG. **16**, each of the terminals **500** is manufactured by punching out a blank from a metal plate, followed by bending the blank. In other words, each of the terminals **500** has a uniform thickness. The terminal **500** has a shape different from a shape of the terminal **400**. Each of the terminals **500** has a fixed portion **510**, a press-fit portion **520**, a supporting portion **530**, a contact point **540** and a coupled portion **550**.

As shown in FIG. **16**, the fixed portion **510** of the present embodiment defines an outer end of the terminal **500** in the width direction. Specifically, the fixed portion **510** defines a rear end of the terminal **500** in the front-rear direction. The fixed portion **510** defines a lower end of the terminal **500** in

the up-down direction. The fixed portion **510** is fixed to a pad (not shown) of the circuit board when the connector **100** is mounted on the circuit board.

As shown in FIG. **16**, the press-fit portion **520** of the present embodiment extends upward in the up-down direction from an inner end of the fixed portion **510** in the width direction. Specifically, the press-fit portion **520** extends upward in the up-down direction from a front end of the fixed portion **510** in the front-rear direction. As shown in FIG. **11**, the press-fit portion **520** is press-fit into the side wall portion **211**. More specifically, the press-fit portion **520** of the terminal **500** is press-fit into the corresponding press-fit part **215** of the side wall portion **211**.

As shown in FIG. **16**, the supporting portion **530** of the present embodiment extends from the press-fit portion **520**. More in detail, the supporting portion **530** extends upward in the up-down direction from an upper end of the press-fit portion **520**, and is bent so that it extends inward in the width direction, and is further bent so that it extends downward in the up-down direction. Specifically, the supporting portion **530** extends upward in the up-down direction from the upper end of the press-fit portion **520**, and is bent so that it extends forward in the front-rear direction, and is further bent so that it extends downward in the up-down direction. The supporting portion **530** is resiliently deformable. As understood from FIGS. **5** and **11**, the receiving portion **213** partially receives the supporting portion **530** when the supporting portion **530** is resiliently deformed. Specifically, each of the receiving portions **213** partially receives the supporting portion **530** of the corresponding terminal **500** when the supporting portion **530** of the corresponding terminal **500** is resiliently deformed. The supporting portion **530** of the terminal **500** is positioned between the corresponding receiving portion **213** and the contact point **540** in the width direction. The supporting portion **530** of the terminal **500** is positioned inward of the corresponding receiving portion **213** in the width direction. Specifically, the supporting portion **530** of the terminal **500** is positioned forward of the corresponding receiving portion **213** in the front-rear direction.

As shown in FIG. **14**, the supporting portion **530** has a narrow portion **532** and two wide portions **534**. Specifically, in the pitch direction, the narrow portion **532** has a size smaller than an average size of the supporting portion **530**. Additionally, in the pitch direction, each of the wide portions **534** has a size greater than the average size of the supporting portion **530**.

As shown in FIG. **14**, the narrow portion **532** of the present embodiment is positioned between the two wide portions **534** in the up-down direction. The size of the narrow portion **532** in the pitch direction is smaller than the size of any of the wide portions **534** in the pitch direction. As shown in FIG. **16**, the narrow portion **532** is nearer to the contact point **540** than any of the wide portions **534** is in the up-down direction.

As shown in FIG. **14**, in the present embodiment, one of the wide portions **534** is coupled with the press-fit portion **520**. Specifically, a lower end of the one of the wide portions **534** is coupled with an upper end of the press-fit portion **520**. The one of the wide portions **534** couples the narrow portion **532** and the press-fit portion **520** with each other. A remaining one of the wide portions **534** is coupled with the narrow portion **532**. Specifically, a lower end of the remaining one of the wide portions **534** is coupled with an upper end of the narrow portion **532**. The size of each of the wide portions **534** in the pitch direction is greater than the size of the narrow portion **532** in the pitch direction. As shown in FIG. **16**, each of the wide portions **534** is farther away from the contact point **540** than the narrow portion **532** is in the up-down direction.

Referring to FIG. **5**, the contact point **540** of the present embodiment is brought into contact with the mating contact portion **852** when the connector **100** and the mating connector **800** are mated with each other. As shown in FIG. **16**, the contact point **540** is supported by the supporting portion **530**. Specifically, the contact point **540** is resiliently supported by the supporting portion **530**. Since the supporting portion **530** is resiliently deformable as described above, the contact point **540** is movable in the width direction. The contact point **540** faces inward in the width direction. Specifically, the contact point **540** faces forward in the front-rear direction.

Referring to FIGS. **8** and **15**, the contact point **440** of each of the terminals **400** of the one of the terminal rows **300**, **310**, or of the terminal row **300**, faces the contact point **540** of the corresponding terminal **500** of the remaining one of the terminal rows **300**, **310**, or of the terminal row **310** in the width direction. That is, in each of the terminal pairs **350**, the contact point **440** of the terminal **400** and the contact point **540** of the terminal **500** face each other in the width direction. In each of the terminal pairs **350**, the contact point **440** of the terminal **400** and the contact point **540** of the terminal **500** are positioned at the same position as each other in the pitch direction. That is, in the pitch direction, the contact point **440** of each of the terminals **400** of the one of the terminal rows **300**, **310**, or of the terminal row **300**, is positioned at the position same as the position of the contact point **540** of the corresponding terminal **500** of the remaining one of the terminal rows **300**, **310**, or of the terminal row **310**. Thus, the connector **100** of the present embodiment is configured so that contact force of the contact point **440** of the terminal **400** of the terminal row **300** against the mating terminal **850** and contact force of the contact point **540** of the corresponding terminal **500** of the terminal row **310** against the mating terminal **850** do not act as a couple of forces when the connector **100** and the mating connector **800** are mated with each other and the terminals **400**, **500** are connected with the mating terminals **850**.

As shown in FIG. **16**, the coupled portion **550** of the present embodiment extends from the contact point **540**. The coupled portion **550** extends downward in the up-down direction and outward in the width direction from the contact point **540**, and is bent so that it extends inward in the width direction. Specifically, the coupled portion **550** extends downward in the up-down direction and rearward in the front-rear direction from the contact point **540**, and is bent so that it extends forward in the front-rear direction. The coupled portion **550** defines an inner end of the terminal **500** in the width direction. Specifically, the coupled portion **550** defines a front end of the terminal **500** in the front-rear direction. Referring to FIGS. **14** and **17**, in each of the terminals **500**, a size SS of the supporting portion **530** in the pitch direction is smaller than a size CS of the coupled portion **550** in the pitch direction. As shown in FIG. **7**, a part of the coupled portion **550** is visible when the connector **100** is viewed from below.

Referring to FIGS. **8** and **16**, the coupled portion **450** of each of the terminals **400** of the one of the terminal rows **300**, **310**, or of the terminal row **300**, is positioned at a position different from a position of the coupled portion **550** of the corresponding terminal **500** of the remaining one of the terminal rows **300**, **310**, or of the terminal row **310**, in the up-down direction. Specifically, the coupled portion **450** of each of the terminals **400** of the terminal row **300** is

positioned above the coupled portion **550** of the corresponding terminal **500** of the terminal row **310** in the up-down direction. A position of the coupled portion **450** of each of the terminals **400** of the one of the terminal rows **300**, **310**, or of the terminal row **300**, overlaps with a position of the coupled portion **550** of the corresponding terminal **500** of the remaining one of the terminal rows **300**, **310**, or of the terminal row **310**, in the width direction. Referring to FIGS. **15** and **17**, the coupled portion **450** of each of the terminals **400** of the one of the terminal rows **300**, **310**, or of the terminal row **300**, is positioned at a position same as a position of the coupled portion **550** of the corresponding terminal **500** of the remaining one of the terminal rows **300**, **310**, or of the terminal row **310**, in the pitch direction.

As shown in FIG. **16**, the coupled portion **550** has an upper surface **551** and a lower surface **552** in the up-down direction perpendicular to both the width direction and the pitch direction. Additionally, the coupled portion **550** has an end surface **556** in the width direction.

As shown in FIG. **16**, the upper surface **551** of the present embodiment faces upward in the up-down direction. The upper surface **551** is a surface intersecting with the up-down direction.

As shown in FIG. **16**, the lower surface **552** of the present embodiment faces downward in the up-down direction. The lower surface **552** is a surface intersecting with the up-down direction. As shown in FIG. **7**, the lower surface **552** is visible when the connector **100** is viewed from below.

As shown in FIG. **16**, the end surface **556** of the present embodiment faces inward in the width direction. Specifically, the end surface **556** faces forward in the front-rear direction. The end surface **556** is a surface intersecting with the width direction. The end surface **556** defines the inner end of the terminal **500** in the width direction. Specifically, the end surface **556** defines the front end of the terminal **500** in the front-rear direction.

Referring to FIG. **9**, each of the coupling portions **700** of the present embodiment is made of insulator. Specifically, each of the coupling portions **700** is formed of a sheet-like insulative base member whose upper and lower surfaces are coated with adhesive. Referring to FIG. **16**, the coupling portions **700** correspond to the terminal pairs **350**, respectively. The terminal pair **350** and the corresponding coupling portion **700** form a contact structure **360**. In the contact structure **360**, the coupled portion **450** of the terminal **400** and the coupled portion **550** of the terminal **500** are positioned at the positions different from each other in the up-down direction. The contact structure **360** has an asymmetric shape with respect to a plane which is perpendicular to the width direction while passing through a middle of the contact structure **360** in the width direction. Referring to FIGS. **15** and **17**, in the contact structure **360**, the coupled portion **450** of the terminal **400** and the coupled portion **550** of the terminal **500** are positioned at the same position as each other in the pitch direction.

As described above, the connector **100** of the present embodiment is configured so that the contact force of the contact point **440** of the terminal **400** of the terminal row **300** against the mating terminal **850** and the contact force of the contact point **540** of the corresponding terminal **500** of the terminal row **310** against the mating terminal **850** do not act as the couple of forces when the connector **100** and the mating connector **800** are mated with each other and the terminals **400**, **500** are connected with the mating terminals **850**. Thus, a moment about a rotational axis parallel to the up-down direction is not produced in the contact structure **360** when the connector **100** and the mating connector **800** are mated with each other and the terminals **400**, **500** are connected with the mating terminals **850**.

Referring to FIGS. **8** and **11**, each of the coupling portions **700** couples the coupled portion **450** of the terminal **400** of the one of the terminal rows **300**, **310**, or of the terminal row **300**, with the coupled portion **550** of the corresponding terminal **500** of the remaining one of the terminal rows **300**, **310**, or of the terminal row **310**, in a direction perpendicular to the pitch direction. In other words, the connector **100** of the present embodiment is configured so that the coupled portion **450** of each of the terminals **400** of the terminal row **300** and the coupled portion **550** of the corresponding terminal **500** of the terminal row **310** are coupled with each other in the direction perpendicular to the pitch direction by the coupling portion **700** made of insulator. This enables the connector **100** of the present embodiment to be configured as follows: in a case where the mating connector **800** is moved relative to the connector **100** in a first orientation of the width direction under a mated state where the connector **100** and the mating connector **800** are mated with each other, ones of mating terminals **850** are pressed against ones of the terminals **400**, **500** corresponding thereto and belonging to the terminal row **300**, **310** which is positioned at a first side of the connector **100** in the first orientation; and, in this case, the others of the terminals **400**, **500** of the terminal row **300**, **310**, which is positioned at a second side of the connector **100** in a second orientation opposite to the first orientation of the width direction, are moved in the first orientation and thereby the contact between the others of the terminals **400**, **500** of the terminal row **300**, **310** at the second side of the connector **100** and the others of the mating terminals **850** corresponding thereto is also maintained. In other words, the connector **100** of the present invention can ensure reliable contact between the terminals **400**, **500** and the mating terminals **850** when the mating connector **800** is moved in the width direction relative to the connector **100** under the mated state where the connector **100** and the mating connector **800** are mated with each other.

As described above, in each of the terminals **400**, the size SS of the supporting portion **430** in the pitch direction is smaller than the size CS of the coupled portion **450** in the pitch direction. Additionally, as described above, in each of the terminals **500**, the size SS of the supporting portion **530** in the pitch direction is smaller than the size CS of the coupled portion **550** in the pitch direction. Thus, when the mating connector **800** is moved in the width direction relative to the connector **100** under the mated state where the connector **100** and the mating connector **800** are mated with each other, the supporting portions **430**, **530** are easily deformable resiliently and thereby the contact points **440**, **540** easily follow the movement of the mating connector **800** in the width direction. When the mating connector **800** is moved in the width direction relative to the connector **100** under the mated state where the connector **100** and the mating connector **800** are mated with each other, spring force, which is produced by the coupled portions **450**, **550** and the coupling portion **700**, presses the terminals **400**, **500** against the mating contact portions **852** from the outsides of the mating contact portions **852** in the width direction to produce the contact forces of terminals **400**, **500** against the mating terminals **850**, respectively. That is, the connector **100** of the present embodiment is configured so that a difference between the contact force of the terminal **400** against the mating terminal **850** and the contact force of the corresponding terminal **500** against the mating terminal **850** is not produced even when the mating connector **800** is moved in the width direction relative to the connector **100**

under the mated state where the connector **100** and the mating connector **800** are mated with each other.

As described above, the contact structure **360** of the present embodiment is configured as follows: each of the terminals **400**, **500** has the uniform thickness; the supporting portion **430** has the narrow portion **432** and the two wide portions **434**; in the pitch direction, the narrow portion **432** has the size smaller than the average size of the supporting portion **430**; in the pitch direction, each of the wide portions **434** has the size greater than the average size of the supporting portion **430**; the narrow portion **432** is nearer to the contact point **440** than any of the wide portions **434** is in the up-down direction; the supporting portion **530** has the narrow portion **532** and the two wide portions **534**; in the pitch direction, the narrow portion **532** has the size smaller than the average size of the supporting portion **530**; in the pitch direction, each of the wide portions **534** has the size greater than the average size of the supporting portion **530**; and the narrow portion **532** is nearer to the contact point **540** than any of the wide portions **534** is in the up-down direction. Specifically, referring to FIGS. **5** and **11**, the narrow portion **432**, which has the size smaller than the average size of the supporting portion **430** in the pitch direction, is positioned at a location where bending moment upon the mating of the connector **100** with the mating connector **800** is small because the location is near to the contact point **440**. Similarly, referring to FIGS. **5** and **11**, the narrow portion **532**, which has the size smaller than the average size of the supporting portion **530** in the pitch direction, is positioned at a location where bending moment upon the mating of the connector **100** with the mating connector **800** is small because the location is near to the contact point **540**. In contrast, referring to FIGS. **5** and **11**, each of the wide portions **434**, which has the size greater than the average size of the supporting portion **430** in the pitch direction, is positioned at a location where bending moment upon the mating of the connector **100** with the mating connector **800** is large because the location is farther away from the contact point **440**. Similarly, referring to FIGS. **5** and **11**, each of the wide portions **534**, which has the size greater than the average size of the supporting portion **530** in the pitch direction, is positioned at a location where bending moment upon the mating of the connector **100** with the mating connector **800** is large because the location is farther away from the contact point **540**. This enables bending stresses, which are produced at various locations of the supporting portions **430**, **530** upon the mating of the connector **100** with the mating connector **800**, to be uniform. Thus, the contact structure **360** of the present embodiment prevents plastic deformations of the supporting portions **430**, **530** which might be caused by stress concentrations at parts of the supporting portions **430**, **530** upon the mating of the connector **100** with the mating connector **800**. It is noted that the arrangements and sizes in the pitch direction of the narrow portions **432**, **532** and the wide portions **434**, **534** can be appropriately configured with consideration given to the shape of the contact structure **360**.

Referring to FIGS. **8** and **16**, each of the coupling portions **700** is sandwiched between the coupled portion **450** of the terminal **400** of the one of the terminal rows **300**, **310**, or of the terminal row **300**, and the coupled portion **550** of the corresponding terminal **500** of the remaining one of the terminal rows **300**, **310**, or of the terminal row **310**, in the up-down direction perpendicular to both the width direction and the pitch direction. Each of the coupling portions **700** couples the coupled portion **450** of the terminal **400** of the one of the terminal rows **300**, **310**, or of the terminal row **300**, with the coupled portion **550** of the corresponding terminal **500** of the remaining one of the terminal rows **300**, **310**, or of the terminal row **310**, in the up-down direction. Specifically, each of the coupling portions **700** couples the lower surface **452** of the coupled portion **450** of the terminal **400** of the terminal row **300** with the upper surface **551** of the coupled portion **550** of the corresponding terminal **500** of the terminal row **310** in the up-down direction. It is noted that the coupling portion **700** is not coupled with any of the end surface **456** of the terminal **400** and the end surface **556** of the terminal **500**.

Referring to FIGS. **9** and **16**, in each of the contact structures **360**, the corresponding coupling portion **700** is sandwiched between the coupled portion **450** of the terminal **400** and the coupled portion **550** of the terminal **500** in the up-down direction perpendicular to both the width direction and the pitch direction. In each of the contact structures **360**, the coupling portion **700** couples the coupled portion **450** of the terminal **400** with the coupled portion **550** of the terminal **500** in the direction perpendicular to the pitch direction. Specifically, in each of the contact structures **360**, the coupling portion **700** couples the coupled portion **450** of the terminal **400** with the coupled portion **550** of the terminal **500** in the up-down direction perpendicular to the pitch direction. More in detail, in each of the contact structures **360**, the coupling portion **700** couples the lower surface **452** of the coupled portion **450** of the terminal **400** with the upper surface **551** of the coupled portion **550** of the terminal **500** in the up-down direction.

Referring to FIG. **16**, the coupling of the coupling portion **700** with the coupled portion **450** of the terminal **400** and the coupling of the coupling portion **700** with the coupled portion **550** of the terminal **500** are achieved, for example, as follows. Each of the coupling portions **700** is sandwiched by the coupled portion **450** of the terminal **400** and the coupled portion **550** of the terminal **500**, and heat and pressure are applied to the coupled portions **450**, **550** in this state so that the coupling portion **700** is coupled with both of the coupled portion **450** and the coupled portion **550**.

Where the present embodiment of the present invention is described above, the present embodiment may be modified as follows.

(First Modification)

Referring to FIGS. **6** and **18**, a connector of a first modification (not shown) comprises a housing (not shown), a plurality of terminals **400**A, **500**A and a plurality of coupling portions **700**A. The housing of the present modification has a structure same as that of the housing **200** of the aforementioned embodiment. Accordingly, detailed explanation thereabout is omitted.

Referring to FIG. **22**, the terminals **400**A, **500**A of the present modification form two terminal rows (not shown). Specifically, the terminals **400**A of the present modification form a terminal row (not shown) while the terminals **500**A of the present modification form another terminal row (not shown). The two terminal rows are arranged in the width direction, or in the front-rear direction. The two terminal rows are respectively held by two side wall portions (not shown) of the housing. In each of the two terminal rows, the terminals **400**A are arranged in the pitch direction perpendicular to the width direction while the terminals **500**A are arranged in the pitch direction perpendicular to the width direction. The terminals **400**A of one of the two terminal rows respectively correspond to the terminals **500**A of a remaining one of the two terminal rows. The terminal **400**A of the one of the terminal rows and the corresponding terminal **500**A of the remaining one of the terminal rows

form a terminal pair **350**A. Referring to FIG. **21**, in the pitch direction, the terminal **400**A of the one of the terminal rows is positioned at a position same as a position of the corresponding terminal **500**A of the remaining one of the terminal rows. That is, in each of the terminal pairs **350**A, the two terminals **400**A and **500**A are positioned at the same position as each other in the pitch direction. The terminals **400**A, **500**A are respectively connected with mating terminals (not shown) of a mating connector (not shown) when the connector and the mating connector are mated with each other.

As shown in FIG. **22**, each of the terminals **400**A is manufactured by punching out a blank from a metal plate, followed by bending the blank. In other words, each of the terminals **400**A has a uniform thickness. Each of the terminals **400**A has a fixed portion **410**, a press-fit portion **420**, a supporting portion **430**, a contact point **440** and a coupled portion **450**A. The fixed portion **410**, the press-fit portion **420**, the supporting portion **430** and the contact point **440** of the present modification have structures same as those of the fixed portion **410**, the press-fit portion **420**, the supporting portion **430** and the contact point **440** of the aforementioned embodiment. Accordingly, detailed explanation thereabout is omitted.

As shown in FIG. **22**, the coupled portion **450**A of the present modification extends from the contact point **440**. The coupled portion **450**A extends downward in the up-down direction and outward in the width direction from the contact point **440**, and is bent so that it extends inward in the width direction. Specifically, the coupled portion **450**A extends downward in the up-down direction and forward in the front-rear direction from the contact point **440**, and is bent so that it extends rearward in the front-rear direction. The coupled portion **450**A defines an inner end of the terminal **400**A in the width direction. Specifically, the coupled portion **450**A defines a rear end of the terminal **400**A in the front-rear direction. Referring to FIGS. **19** and **21**, in each of the terminals **400**A, a size of the supporting portion **430** in the pitch direction is smaller than a size of the coupled portion **450**A in the pitch direction.

As shown in FIG. **22**, the coupled portion **450**A has an upper surface **451**A and a lower surface **452**A in the up-down direction perpendicular to both the width direction and the pitch direction. Additionally, the coupled portion **450**A has an end surface **456**A in the width direction. The upper surface **451**A, the lower surface **452**A and the end surface **456**A of the present modification have structures same as those of the upper surface **451**, the lower surface **452** and the end surface **456** of the aforementioned embodiment. Accordingly, detailed explanation thereabout is omitted.

As shown in FIG. **22**, the terminal **500**A has the same shape as the terminal **400**A. Each of the terminals **500**A is manufactured by punching out a blank from a metal plate, followed by bending the blank. Specifically, each of the terminals **500**A has a uniform thickness. Each of the terminals **500**A has a fixed portion **510**, a press-fit portion **520**, a supporting portion **530**, a contact point **540** and a coupled portion **550**A. The fixed portion **510**, the press-fit portion **520**, the supporting portion **530** and the contact point **540** of the present modification have structures same as those of the fixed portion **510**, the press-fit portion **520**, the supporting portion **530** and the contact point **540** of the aforementioned embodiment. Accordingly, detailed explanation thereabout is omitted.

As shown in FIG. **22**, the coupled portion **550**A of the present modification extends from the contact point **540**. The coupled portion **550**A extends downward in the up-down direction and outward in the width direction from the contact point **540**, and is bent so that it extends inward in the width direction. Specifically, the coupled portion **550**A extends downward in the up-down direction and rearward in the front-rear direction from the contact point **540**, and is bent so that it extends forward in the front-rear direction. The coupled portion **550**A defines an inner end of the terminal **500**A in the width direction. Specifically, the coupled portion **550**A defines a front end of the terminal **500**A in the front-rear direction. Referring to FIGS. **20** and **21**, in each of the terminals **500**A, a size of the supporting portion **530** in the pitch direction is smaller than a size of the coupled portion **550**A in the pitch direction.

Referring to FIG. **22**, the coupled portion **450**A of each of the terminals **400**A of the one of the terminal rows is positioned away from the coupled portion **550**A of the corresponding terminal **500**A of the remaining one of the terminal rows in the width direction. The coupled portion **450**A of each of the terminals **400**A of the one of the terminal rows is positioned at a position same as a position of the coupled portion **550**A of the corresponding terminal **500**A of the remaining one of the terminal rows in the up-down direction. Referring to FIG. **21**, the coupled portion **450**A of each of the terminals **400**A of the one of the terminal rows is positioned at a position same as a position of the coupled portion **550**A of the corresponding terminal **500**A of the remaining one of the terminal rows in the pitch direction.

As shown in FIG. **22**, the coupled portion **550**A has an upper surface **551**A and a lower surface **552**A in the up-down direction perpendicular to both the width direction and the pitch direction. Additionally, the coupled portion **550**A has an end surface **556**A in the width direction. The upper surface **551**A, the lower surface **552**A and the end surface **556**A of the present modification have structures same as those of the upper surface **551**, the lower surface **552** and the end surface **556** of the aforementioned embodiment. Accordingly, detailed explanation thereabout is omitted.

Referring to FIG. **22**, each of the coupling portions **700**A of the present embodiment is made of insulator. The coupling portions **700**A correspond to the terminal pairs **350**A, respectively. The terminal pair **350**A and the corresponding coupling portion **700**A form a contact structure **360**A. In the contact structure **360**A of the present modification, the coupled portion **450**A of the terminal **400**A and the coupled portion **550**A of the terminal **500**A are positioned away from each other in the width direction. In the contact structure **360**A, the coupled portion **450**A of the terminal **400**A and the coupled portion **550**A of the terminal **500**A are positioned at the same position as each other in the up-down direction. The contact structure **360**A has a symmetrical shape with respect to a plane which is perpendicular to the width direction while passing through a middle of the contact structure **360**A in the width direction. Referring to FIG. **21**, in the contact structure **360**A, the coupled portion **450**A of the terminal **400**A and the coupled portion **550**A of the terminal **500**A are positioned at the same position as each other in the pitch direction.

Referring to FIG. **22**, each of the coupling portions **700**A couples the coupled portion **450**A of the terminal **400**A of the one of the terminal rows with the coupled portion **550**A of the corresponding terminal **500**A of the remaining one of the terminal rows in a direction perpendicular to the pitch direction. In other words, the connector of the present modification is configured so that the coupled portion **450**A of the terminal **400**A of the one of the two terminal rows and the coupled portion **550**A of the corresponding terminal **500**A of the remaining one of the two terminal rows are

coupled with each other by the coupling portion **700**A, which is made of insulator, in the direction perpendicular to the pitch direction. This enables the connector of the present modification to be configured as follows: in a case where the mating connector is moved relative to the connector in the first orientation of the width direction under a mated state where the connector and the mating connector are mated with each other, ones of the mating terminals are pressed against ones of the terminals **400**A, **500**A corresponding thereto and belonging to the terminal row which is positioned at a first side of the connector in the first orientation; and, in this case, the others of the terminals **400**A, **500**A of the terminal row, which is positioned at a second side of the connector in the second orientation opposite to the first orientation of the width direction, are moved in the first orientation and thereby the contact between the others of the terminals **400**A, **500**A of the terminal row at the second side of the connector and the others of the mating terminals corresponding thereto is also maintained. In other words, the connector of the present modification can ensure reliable contact between the terminals **400**A, **500**A and the mating terminals when the mating connector is moved in the width direction relative to the connector under the mated state where the connector and the mating connector are mated with each other.

Referring to FIG. **22**, each of the coupling portions **700**A couples the coupled portion **450**A of the terminal **400**A of the one of the terminal rows with the coupled portion **550**A of the corresponding terminal **500**A of the remaining one of the terminal rows in the width direction perpendicular to the pitch direction.

Referring to FIG. **22**, each of the coupling portions **700**A couples the lower surface **452**A of the coupled portion **450**A of the terminal **400**A of the one of the terminal rows with the lower surface **552**A of the coupled portion **550**A of the corresponding terminal **500**A of the remaining one of the terminal rows in the width direction. However, the present invention is not limited thereto, but each of the coupling portions **700**A may couple the upper surface **451**A of the coupled portion **450**A of the terminal **400**A of the one of the terminal rows with the upper surface **551**A of the coupled portion **550**A of the corresponding terminal **500**A of the remaining one of the terminal rows in the width direction. In other words, the connector of the present modification should be configured so that each of the coupling portions **700**A couples the upper surface **451**A of the coupled portion **450**A of the terminal **400**A of the one of the terminal rows with the upper surface **551**A of the coupled portion **550**A of the corresponding terminal **500**A of the remaining one of the terminal rows in the width direction or couples the lower surface **452**A of the coupled portion **450**A of the terminal **400**A of the one of the terminal rows with the lower surface **552**A of the coupled portion **550**A of the corresponding terminal **500**A of the remaining one of the terminal rows in the width direction.

Referring to FIG. **22**, in each of the contact structures **360**A, the coupling portion **700**A couples the coupled portion **450**A of the terminal **400**A with the coupled portion **550**A of the terminal **500**A in the direction perpendicular to the pitch direction. Specifically, in each of the contact structures **360**A, the coupling portion **700**A couples the coupled portion **450**A of the terminal **400**A with the coupled portion **550**A of the terminal **500**A in the width direction perpendicular to the pitch direction.

(Second Modification)

Referring to FIGS. **6** and **24**, a connector of a second modification (not shown) comprises a housing (not shown), a plurality of terminals **400**B, **500**B and a plurality of coupling portions **700**B. The housing of the present modification has a structure same as that of the housing **200** of the aforementioned embodiment. Accordingly, detailed explanation thereabout is omitted.

Referring to FIG. **26**, the terminals **400**B, **500**B of the present modification form two terminal rows (not shown). Specifically, the terminals **400**B of the present modification form a terminal row (not shown) while the terminals **500**B of the present modification form another terminal row (not shown). The two terminal rows are arranged in the width direction, or in the front-rear direction. The two terminal rows are respectively held by two side wall portions (not shown) of the housing. In each of the two terminal rows, the terminals **400**B are arranged in the pitch direction perpendicular to the width direction while the terminals **500**B are arranged in the pitch direction perpendicular to the width direction. The terminals **400**B of one of the two terminal rows respectively correspond to the terminals **500**B of a remaining one of the two terminal rows. The terminal **400**B of the one of the terminal rows and the corresponding terminal **500**B of the remaining one of the terminal rows form a terminal pair **350**B. Referring to FIG. **25**, in the pitch direction, the terminal **400**B of the one of the terminal rows is positioned at a position same as a position of the corresponding terminal **500**B of the remaining one of the terminal rows. That is, in each of the terminal pairs **350**B, the two terminals **400**B and **500**B are positioned at the same position as each other in the pitch direction. The terminals **400**B, **500**B are respectively connected with mating terminals (not shown) of a mating connector (not shown) when the connector and the mating connector are mated with each other.

As shown in FIG. **26**, each of the terminals **400**B is manufactured by punching out a blank from a metal plate, followed by bending the blank. In other words, each of the terminals **400**B has a uniform thickness. Each of the terminals **400**B has a fixed portion **410**, a press-fit portion **420**, a supporting portion **430**, a contact point **440** and a coupled portion **450**B. The fixed portion **410**, the press-fit portion **420**, the supporting portion **430** and the contact point **440** of the present modification have structures same as those of the fixed portion **410**, the press-fit portion **420**, the supporting portion **430** and the contact point **440** of the aforementioned embodiment. Accordingly, detailed explanation thereabout is omitted.

As shown in FIG. **26**, the coupled portion **450**B of the present modification extends from the contact point **440**. Specifically, the coupled portion **450**B extends downward in the up-down direction and outward in the width direction from the contact point **440**, and is bent so that it extends inward in the width direction. Specifically, the coupled portion **450**B extends downward in the up-down direction and forward in the front-rear direction from the contact point **440**, and is bent so that it extends rearward in the front-rear direction. The coupled portion **450**B defines an inner end of the terminal **400**B in the width direction. Specifically, the coupled portion **450**B defines a rear end of the terminal **400**B in the front-rear direction. Referring to FIGS. **24** and **25**, in each of the terminals **400**B, a size of the supporting portion **430** in the pitch direction is smaller than a size of the coupled portion **450**B in the pitch direction.

As shown in FIG. **26**, the coupled portion **450**B has an upper surface **451**B and a lower surface **452**B in the up-down direction perpendicular to both the width direction and the pitch direction. Additionally, the coupled portion **450**B has an end surface **456**B in the width direction. The upper surface **451**B, the lower surface **452**B and the end surface

456B of the present modification have structures same as those of the upper surface 451, the lower surface 452 and the end surface 456 of the aforementioned embodiment. Accordingly, detailed explanation thereabout is omitted.

As shown in FIG. 26, the terminal 500B has the same shape as the terminal 400B. Each of the terminals 500B is manufactured by punching out a blank from a metal plate, followed by bending the blank. In other words, each of the terminals 500B has a uniform thickness. Each of the terminals 500B has a fixed portion 510, a press-fit portion 520, a supporting portion 530, a contact point 540 and a coupled portion 550B. The fixed portion 510, the press-fit portion 520, the supporting portion 530 and the contact point 540 of the present modification have structures same as those of the fixed portion 510, the press-fit portion 520, the supporting portion 530 and the contact point 540 of the aforementioned embodiment. Accordingly, detailed explanation thereabout is omitted.

As shown in FIG. 26, the coupled portion 550B of the present modification extends from the contact point 540. The coupled portion 550B extends downward in the up-down direction and outward in the width direction from the contact point 540, and is bent so that it extends inward in the width direction. Specifically, the coupled portion 550B extends downward in the up-down direction and rearward in the front-rear direction from the contact point 540, and is bent so that it extends forward in the front-rear direction. The coupled portion 550B defines an inner end of the terminal 500B in the width direction. Specifically, the coupled portion 550B defines a front end of the terminal 500B in the front-rear direction. Referring to FIGS. 24 and 25, in each of the terminals 500B, a size of the supporting portion 530 in the pitch direction is smaller than a size of the coupled portion 550B in the pitch direction.

Referring to FIG. 26, the coupled portion 450B of each of the terminals 400B of the one of the terminal rows is positioned away from the coupled portion 550B of the corresponding terminal 500B of the remaining one of the terminal rows in the width direction. The coupled portion 450B of each of the terminals 400B of the one of the terminal rows is positioned at a position same as a position of the coupled portion 550B of the corresponding terminal 500B of the remaining one of the terminal rows in the up-down direction. Referring to FIG. 25, the coupled portion 450B of each of the terminals 400B of the one of the terminal rows is positioned at a position same as a position of the coupled portion 550B of the corresponding terminal 500B of the remaining one of the terminal rows in the pitch direction.

Referring to FIG. 26, each of the coupling portions 700B of the present modification is made of insulator. The coupling portions 700B correspond to the terminal pairs 350B, respectively. The terminal pair 350B and the corresponding coupling portion 700B form a contact structure 360B. In the contact structure 360B of the present modification, the coupled portion 450B of the terminal 400B and the coupled portion 550B of the terminal 500B are positioned away from each other in the width direction. In the contact structure 360B, the coupled portion 450B of the terminal 400B and the coupled portion 550B of the terminal 500B are positioned at the same position as each other in the up-down direction. The contact structure 360B has a symmetrical shape with respect to a plane which is perpendicular to the width direction while passing through a middle of the contact structure 360B in the width direction. As shown in FIG. 25, in the contact structure 360B, the coupled portion 450B of the terminal 400B and the coupled portion 550B of the terminal 500B are positioned at the same position as each other in the pitch direction.

Referring to FIG. 26, each of the coupling portions 700B couples the coupled portion 450B of the terminal 400B of the one of the terminal rows with the coupled portion 550B of the corresponding terminal 500B of the remaining one of the terminal rows in a direction perpendicular to the pitch direction. In other words, the connector of the present modification is configured so that the coupled portion 450B of the terminal 400B of the one of the two terminal rows and the coupled portion 550B of the corresponding terminal 500B of the remaining one of the two terminal rows are coupled with each other by the coupling portion 700B, which is made of insulator, in the direction perpendicular to the pitch direction. This enables the connector of the present modification to be configured as follows: in a case where the mating connector is moved relative to the connector in the first orientation of the width direction under a mated state where the connector and the mating connector are mated with each other, ones of the mating terminals are pressed against ones of the terminals 400B, 500B corresponding thereto and belonging to the terminal row which is positioned at a first side of the connector in the first orientation; and, in this case, the others of the terminals 400B, 500B of the terminal row, which is positioned at a second side of the connector in the second orientation opposite to the first orientation of the width direction, are moved in the first orientation and thereby the contact between the others of the terminals 400B, 500B of the terminal row at the second side of the connector and the others of the mating terminals corresponding thereto is also maintained. In other words, the connector of the present modification can ensure reliable contact between the terminals 400B, 500B and the mating terminals when the mating connector is moved in the width direction relative to the connector under the mated state where the connector and the mating connector are mated with each other.

Referring to FIG. 26, each of the coupling portions 700B couples the coupled portion 450B of the terminal 400B of the one of the terminal rows with the coupled portion 550B of the corresponding terminal 500B of the remaining one of the terminal rows in the width direction. Each of the coupling portions 700B is sandwiched between the coupled portion 450B of the terminal 400B of the one of the terminal rows and the coupled portion 550B of the corresponding terminal 500B of the remaining one of the terminal rows in the width direction.

Referring to FIG. 26, the coupling portion 700B is coupled with both of the end surface 456B of the coupled portion 450B of the terminal 400B of the one of the terminal rows and the end surface 556B of the coupled portion 550B of the corresponding terminal 500B of the remaining one of the terminal rows.

Referring to FIG. 26, in each of the contact structures 360B, the coupling portion 700B couples the coupled portion 450B of the terminal 400B with the coupled portion 550B of the terminal 500B in the direction perpendicular to the pitch direction. Specifically, in each of the contact structures 360B, the coupling portion 700B couples the coupled portion 450B of the terminal 400B with the coupled portion 550B of the terminal 500B in the width direction perpendicular to the pitch direction.

(Third Modification)

Referring to FIGS. 6 and 28, a connector of a third modification (not shown) comprises a housing (not shown), a plurality of terminals 400C, 500C and a plurality of

coupling portions **700**C. The housing of the present modification has a structure same as that of the housing **200** of the aforementioned embodiment. Accordingly, detailed explanation thereabout is omitted.

Referring to FIG. **30**, the terminals **400**C, **500**C of the present modification form two terminal rows (not shown). Specifically, the terminals **400**C of the present modification form a terminal row (not shown) while the terminals **500**C of the present modification form another terminal row (not shown). The two terminal rows are arranged in the width direction, or in the front-rear direction. The two terminal rows are respectively held by two side wall portions (not shown) of the housing. In each of the two terminal rows, the terminals **400**C are arranged in the pitch direction perpendicular to the width direction while the terminals **500**C are arranged in the pitch direction perpendicular to the width direction. The terminals **400**C of one of the two terminal rows respectively correspond to the terminals **500**C of a remaining one of the two terminal rows. The terminal **400**C of the one of the terminal rows and the corresponding terminal **500**C of the remaining one of the terminal rows form a terminal pair **350**C. As shown in FIG. **29**, in the pitch direction, the terminal **400**C of the one of the terminal rows is positioned at a position same as a position of the corresponding terminal **500**C of the remaining one of the terminal rows. That is, in each of the terminal pairs **350**C, the two terminals **400**C and **500**C are positioned at the same position as each other in the pitch direction. The terminals **400**C, **500**C are respectively connected with mating terminals (not shown) of a mating connector (not shown) when the connector and the mating connector are mated with each other.

As shown in FIG. **30**, each of the terminals **400**C is manufactured by punching out a blank from a metal plate, followed by bending the blank. In other words, each of the terminals **400**C has a uniform thickness. Each of the terminals **400**C has a fixed portion **410**, a press-fit portion **420**, a supporting portion **430**, a contact point **440** and a coupled portion **450**C. The fixed portion **410**, press-fit portion **420**, the supporting portion **430** and the contact point **440** of the present modification have structures same as those of the fixed portion **410**, the press-fit portion **420**, the supporting portion **430** and the contact point **440** of the aforementioned embodiment. Accordingly, detailed explanation thereabout is omitted.

As shown in FIG. **30**, the coupled portion **450**C of the present modification extends from the contact point **440**. In detail, the coupled portion **450**C extends downward in the up-down direction and outward in the width direction from the contact point **440**, and is bent so that it extends inward in the width direction, and is further bent so that it extends upward in the up-down direction. Specifically, the coupled portion **450**C extends downward in the up-down direction and forward in the front-rear direction from the contact point **440**, and is bent so that it extends rearward in the front-rear direction, and is further bent so that it extends upward in the up-down direction. The coupled portion **450**C defines an inner end of the terminal **400**C in the width direction. Specifically, the coupled portion **450**C defines a rear end of the terminal **400**C in the front-rear direction. Referring to FIGS. **28** and **29**, in each of the terminals **400**C, a size of the supporting portion **430** in the pitch direction is smaller than a size of the coupled portion **450**C in the pitch direction.

As shown in FIG. **30**, the coupled portion **450**C of the present modification has a vertical portion **454**.

As shown in FIG. **30**, the vertical portion **454** of the present modification extends in the up-down direction perpendicular to both the width direction and the pitch direction. The vertical portion **454** defines the inner end of the terminal **400**C in the width direction. Specifically, the vertical portion **454** defines the rear end of the terminal **400**C in the front-rear direction.

As shown in FIG. **30**, the terminal **500**C has the same shape as the terminal **400**C. Each of the terminals **500**C is manufactured by punching out a blank from a metal plate, followed by bending the blank. In other words, each of the terminals **500**C has a uniform thickness. Each of the terminals **500**C has a fixed portion **510**, a press-fit portion **520**, a supporting portion **530**, a contact point **540** and a coupled portion **550**C. The fixed portion **510**, the press-fit portion **520**, the supporting portion **530** and the contact point **540** of the present modification have structures same as those of the fixed portion **510**, the press-fit portion **520**, the supporting portion **530** and the contact point **540** of the aforementioned embodiment. Accordingly, detailed explanation thereabout is omitted.

As shown in FIG. **30**, the coupled portion **550**C of the present modification extends from the contact point **540**. The coupled portion **550**C extends downward in the up-down direction and outward in the width direction from the contact point **540**, and is bent so that it extends inward in the width direction, and is further bent so that it extends upward in the up-down direction. Specifically, the coupled portion **550**C extends downward in the up-down direction and rearward in the front-rear direction from the contact point **540**, and is bent so that it extends forward in the front-rear direction, and is further bent so that it extends upward in the up-down direction. The coupled portion **550**C defines an inner end of the terminal **500**C in the width direction. Specifically, the coupled portion **550**C defines a front end of the terminal **500**C in the front-rear direction. Referring to FIGS. **28** and **29**, in each of the terminals **500**C, a size of the supporting portion **530** in the pitch direction is smaller than a size of the coupled portion **550**C in the pitch direction.

Referring to FIG. **30**, the coupled portion **450**C of each of the terminals **400**C of the one of the terminal rows is positioned at a position same as a position of the coupled portion **550**C of the corresponding terminal **500**C of the remaining one of the terminal rows in the up-down direction. Referring to FIG. **29**, the coupled portion **450**C of each of the terminals **400**C of the one of the terminal rows is positioned at a position same as a position of the coupled portion **550**C of the corresponding terminal **500**C of the remaining one of the terminal rows in the pitch direction.

As shown in FIG. **30**, the coupled portion **550**C of the present modification has a vertical portion **554**.

As shown in FIG. **30**, the vertical portion **554** of the present modification extends in the up-down direction perpendicular to both the width direction and the pitch direction. The vertical portion **554** defines the inner end of the terminal **500**C in the width direction. Specifically, the vertical portion **554** defines the front end of the terminal **500**C in the front-rear direction.

Referring to FIG. **30**, each of the coupling portions **700**C of the present modification is made of insulator. The coupling portions **700**C correspond to the terminal pairs **350**C, respectively. The terminal pair **350**C and the corresponding coupling portion **700**C form a contact structure **360**C. In the contact structure **360**C of the present modification, the coupled portion **450**C of the terminal **400**C and the coupled portion **550**C of the terminal **500**C are positioned away from each other in the width direction. Specifically, in the contact structure **360**C, the vertical portion **454** of the terminal **400**C and the vertical portion **554** of the terminal **500**C are positioned away from each other in the width direction. In

the contact structure **360**C, the coupled portion **450**C of the terminal **400**C and the coupled portion **550**C of the terminal **500**C are positioned at the same position as each other in the up-down direction. Specifically, in the contact structure **360**C, the vertical portion **454** of the terminal **400**C and the vertical portion **554** of the terminal **500**C are positioned at the same position as each other in the up-down direction. The contact structure **360**C has a symmetrical shape with respect to a plane which is perpendicular to the width direction while passing through a middle of the contact structure **360**C in the width direction. As shown in FIG. **29**, in the contact structure **360**C, the coupled portion **450**C of the terminal **400**C and the coupled portion **550**C of the terminal **500**C are positioned at the same position as each other in the pitch direction. Specifically, in the contact structure **360**C, the vertical portion **454** of the terminal **400**C and the vertical portion **554** of the terminal **500**C are positioned at the same position as each other in the pitch direction.

Referring to FIG. **30**, each of the coupling portions **700**C is sandwiched between the coupled portion **450**C of the terminal **400**C of the one of the terminal rows and the coupled portion **550**C of the corresponding terminal **500**C of the remaining one of the terminal rows in the width direction. More specifically, each of the coupling portions **700**C is sandwiched between the vertical portion **454** of the terminal **400**C of the one of the terminal rows and the vertical portion **554** of the corresponding terminal **500**C of the remaining one of the terminal rows in the width direction.

Referring to FIG. **30**, each of the coupling portions **700**C couples the coupled portion **450**C of the terminal **400**C of the one of the terminal rows with the coupled portion **550**C of the corresponding terminal **500**C of the remaining one of the terminal rows in a direction perpendicular to the pitch direction. Specifically, the connector of the present modification is configured so that the coupled portion **450**C of the terminal **400**C of the one of the two terminal rows and the coupled portion **550**C of the corresponding terminal **500**C of the remaining one of the two terminal rows are coupled with each other by the coupling portion **700**C, which is made of insulator, in the direction perpendicular to the pitch direction. This enables the connector of the present modification to be configured as follows: in a case where the mating connector is moved relative to the connector in the first orientation of the width direction under a mated state where the connector and the mating connector are mated with each other, ones of the mating terminals are pressed against ones of the terminals **400**C, **500**C corresponding thereto and belonging to the terminal row which is positioned at a first side of the connector in the first orientation; and, in this case, the others of the terminals **400**C, **500**C of the terminal row, which is positioned at a second side of the connector in the second orientation opposite to the first orientation of the width direction, are moved in the first orientation and thereby the contact between the others of the terminals **400**C, **500**C of the terminal row at the second side of the connector and the others of the mating terminals corresponding thereto is also maintained. In other words, the connector of the present modification can ensure reliable contact between the terminals **400**C, **500**C and the mating terminals when the mating connector is moved in the width direction relative to the connector under the mated state where the connector and the mating connector are mated with each other.

Referring to FIG. **30**, each of the coupling portions **700**C couples the coupled portion **450**C of the terminal **400**C of the one of the terminal rows with the coupled portion **550**C of the corresponding terminal **500**C of the remaining one of the terminal rows in the width direction. More specifically, each of the coupling portions **700**C couples the vertical portion **454** of the terminal **400**C of the one of the terminal rows with the vertical portion **554** of the corresponding terminal **500**C of the remaining one of the terminal rows in the width direction.

Referring to FIG. **30**, in each of the contact structures **360**C, the corresponding coupling portion **700**C is sandwiched between the coupled portion **450**C of the terminal **400**C and the coupled portion **550**C of the terminal **500**C in the width direction. More specifically, in each of the contact structures **360**C, the corresponding coupling portion **700**C is sandwiched between the vertical portion **454** of the coupled portion **450**C of the terminal **400**C and the vertical portion **554** of the coupled portion **550**C of the terminal **500**C in the width direction. In each of the contact structures **360**C, the coupling portion **700**C couples the coupled portion **450**C of the terminal **400**C with the coupled portion **550**C of the terminal **500**C in the direction perpendicular to the pitch direction. Specifically, in each of the contact structures **360**C, the coupling portion **700**C couples the coupled portion **450**C of the terminal **400**C with the coupled portion **550**C of the terminal **500**C in the width direction perpendicular to the pitch direction. More in detail, in each of the contact structures **360**C, the coupling portion **700**C couples the vertical portion **454** of the coupled portion **450**C of the terminal **400**C with the vertical portion **554** of the coupled portion **550**C of the terminal **500**C in the width direction.

Although the specific explanation about the present invention is made above referring to the embodiments, the present invention is not limited thereto and is susceptible to various modifications and alternative forms. In addition, the above embodiments and variations may also be combined.

Although the connector **100** of the present embodiment is configured so that the coupled portions **450** of the terminal **400** and the coupled portions **550** of the terminal **500** are coupled with each other by the sheet-like coupling portion **700**, the present invention is not limited thereto. Specifically, the coupled portions **450** and **550** may be coupled with each other by insert-molding both of the coupled portion **450** of the terminal **400** and the coupled portion **550** of the terminal **500** into a molded product so that the coupled portions **450** and **550** are put together while the coupled portion **450** of the terminal **400** and the coupled portion **550** of the terminal **500** are insulated from each other. In this case, the molded product functions as a coupling portion **700**. Alternatively, the coupled portions **450** and **550** may be coupled with each other by press-fitting both of the coupled portion **450** of the terminal **400** and the coupled portion **550** of the terminal **500** into an insulative block made of resin. In this case, the insulative block made of resin functions as a coupling portion **700**.

While there has been described what is believed to be the preferred embodiment of the invention, those skilled in the art will recognize that other and further modifications may be made thereto without departing from the spirit of the invention, and it is intended to claim all such embodiments that fall within the true scope of the invention.

What is claimed is:

1. A connector comprising a housing, a plurality of terminals and a plurality of coupling portions, wherein:

the housing has two side wall portions and a connection portion;

the connection portion connects the two side wall portions with each other so as to maintain a constant distance between the two side wall portions in a width direction;

the terminals form two terminal rows;

the two terminal rows are held by the two side wall portions, respectively;

in each of the two terminal rows, the terminals are arranged in a pitch direction perpendicular to the width direction;

the terminals of one of the two terminal rows respectively correspond to the terminals of a remaining one of the two terminal rows;

each of the terminals has a press-fit portion, a supporting portion, a contact point and a coupled portion;

the press-fit portion is press-fit into the side wall portion;

the supporting portion extends from the press-fit portion;

the contact point is supported by the supporting portion;

the contact point of each of the terminals of the one of the terminal rows faces the contact point of the corresponding terminal of the remaining one of the terminal rows in the width direction;

the coupled portion extends from the contact point;

each of the coupling portions is made of insulator; and

each of the coupling portions couples the coupled portion of the terminal of the one of the terminal rows with the coupled portion of the corresponding terminal of the remaining one of the terminal rows in a direction perpendicular to the pitch direction.

2. The connector as recited in claim **1**, wherein:

each of the coupling portions is sandwiched between the coupled portion of the terminal of the one of the terminal rows and the coupled portion of the corresponding terminal of the remaining one of the terminal rows in an up-down direction perpendicular to both the width direction and the pitch direction; and

each of the coupling portions couples the coupled portion of the terminal of the one of the terminal rows with the coupled portion of the corresponding terminal of the remaining one of the terminal rows in the up-down direction.

3. The connector as recited in claim **1**, wherein:

the coupled portion has an upper surface and a lower surface in an up-down direction perpendicular to both the width direction and the pitch direction; and

each of the coupling portions couples the upper surface of the coupled portion of the terminal of the one of the terminal rows with the upper surface of the coupled portion of the corresponding terminal of the remaining one of the terminal rows in the width direction or couples the lower surface of the coupled portion of the terminal of the one of the terminal rows with the lower surface of the coupled portion of the corresponding terminal of the remaining one of the terminal rows in the width direction.

4. The connector as recited in claim **1**, wherein:

each of the coupling portions is sandwiched between the coupled portion of the terminal of the one of the terminal rows and the coupled portion of the corresponding terminal of the remaining one of the terminal rows in the width direction; and

each of the coupling portions couples the coupled portion of the terminal of the one of the terminal rows with the coupled portion of the corresponding terminal of the remaining one of the terminal rows in the width direction.

5. The connector as recited in claim **4**, wherein:

the coupled portion has a vertical portion;

the vertical portion extends in an up-down direction perpendicular to both the width direction and the pitch direction;

each of the coupling portions is sandwiched between the vertical portion of the terminal of the one of the terminal rows and the vertical portion of the corresponding terminal of the remaining one of the terminal rows in the width direction; and

each of the coupling portions couples the vertical portion of the terminal of the one of the terminal rows with the vertical portion of the corresponding terminal of the remaining one of the terminal rows in the width direction.

6. The connector as recited in claim **1**, wherein, in each of the terminals, a size of the supporting portion in the pitch direction is smaller than a size of the coupled portion in the pitch direction.

7. The connector as recited in claim **6**, wherein:

each of the side wall portions has a receiving portion; and

the receiving portion partially receives the supporting portion when the supporting portion is resiliently deformed.

8. The connector as recited in claim **6**, wherein:

each of the terminals has a uniform thickness;

the supporting portion has a narrow portion and two wide portions;

in the pitch direction, a size of the narrow portion is smaller than a size of any of the wide portions; and

the narrow portion is nearer to the contact point than any of the wide portions is in the up-down direction.

* * * * *