US012412773B2

(12) **United States Patent**
Su et al.

(10) **Patent No.: US 12,412,773 B2**
(45) **Date of Patent: Sep. 9, 2025**

(54) **VACUUM CHUCK**

(71) Applicant: **Taiwan Semiconductor Manufacturing Co., Ltd.**, Hsinchu (TW)

(72) Inventors: **Po-Yu Su**, Keelung (TW); **Young-Wei Lin**, Taoyuan (TW); **Yu Liang Huang**, Taoyuan (TW); **Chia-Ching Lee**, Taoyuan (TW); **Chi-Chun Peng**, Hsinchu County (TW); **Chen Liang Chang**, New Taipei (TW); **Kuo Hui Chang**, Taoyuan County (TW)

(73) Assignee: **Taiwan Semiconductor Manufacturing Company, Ltd.**, Hsinchu (TW)

(*) Notice: Subject to any disclaimer, the term of this patent is extended or adjusted under 35 U.S.C. 154(b) by 493 days.

(21) Appl. No.: **17/876,381**

(22) Filed: **Jul. 28, 2022**

(65) **Prior Publication Data**

US 2024/0038571 A1 Feb. 1, 2024

(51) **Int. Cl.**
H01L 21/683 (2006.01)
H01L 21/687 (2006.01)
H01L 21/67 (2006.01)

(52) **U.S. Cl.**
CPC ***H01L 21/6838*** (2013.01); ***H01L 21/68721*** (2013.01); *H01L 21/67288* (2013.01)

(58) **Field of Classification Search**
CPC H01L 21/6838; H01L 21/68721; H01L 21/67288; H01L 21/6875; H01L 21/68785
See application file for complete search history.

(56) **References Cited**

U.S. PATENT DOCUMENTS

10,663,434 B2 * 5/2020 Wright G01N 29/069
2020/0006104 A1 * 1/2020 Chen B08B 5/02

FOREIGN PATENT DOCUMENTS

CN 114220762 A * 3/2022
CN 114567957 A * 5/2022
KR 20190030929 A * 3/2019

OTHER PUBLICATIONS

CN-114220762-A PE2E translation (Year: 2022).*
CN-114567957-A PE2E translation (Year: 2022).*
KR-20190030929-A PE2E translation (Year: 2019).*

* cited by examiner

Primary Examiner — Sunil K Singh
Assistant Examiner — Dustin James Trujillo
(74) *Attorney, Agent, or Firm* — Seed Intellectual Property Law Group LLP

(57) **ABSTRACT**

At least one embodiment, a vacuum chuck includes a moisture gate structure that allows for moisture to escape to reduce an amount of warpage in a workpiece when present on the vacuum chuck. The moisture gate structure includes a base portion that extends laterally outward from a central vacuum portion of the vacuum chuck, and a plurality of protrusions are spaced apart from the central vacuum portion and extend outward from the base portion. End surfaces of the plurality of protrusions contact a backside surface of the workpiece (e.g., a wafer on a carrier) when the workpiece is present on the vacuum chuck. The vacuum chuck may further include one or more guide portions that act as guides such that the workpiece remains properly aligned and within position when present on the vacuum chuck.

20 Claims, 9 Drawing Sheets

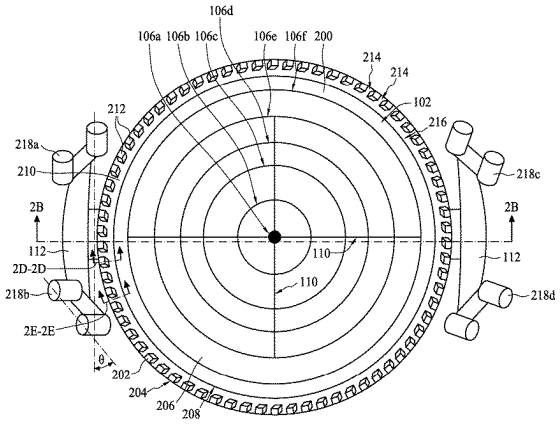

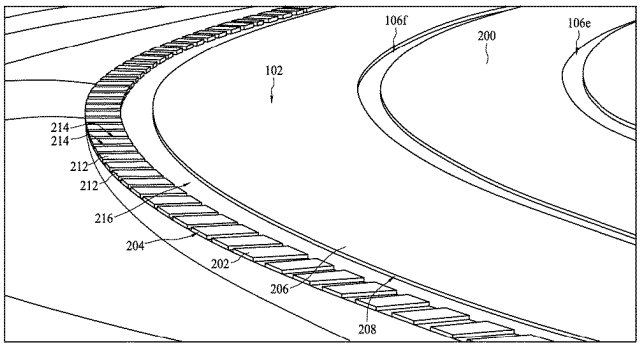

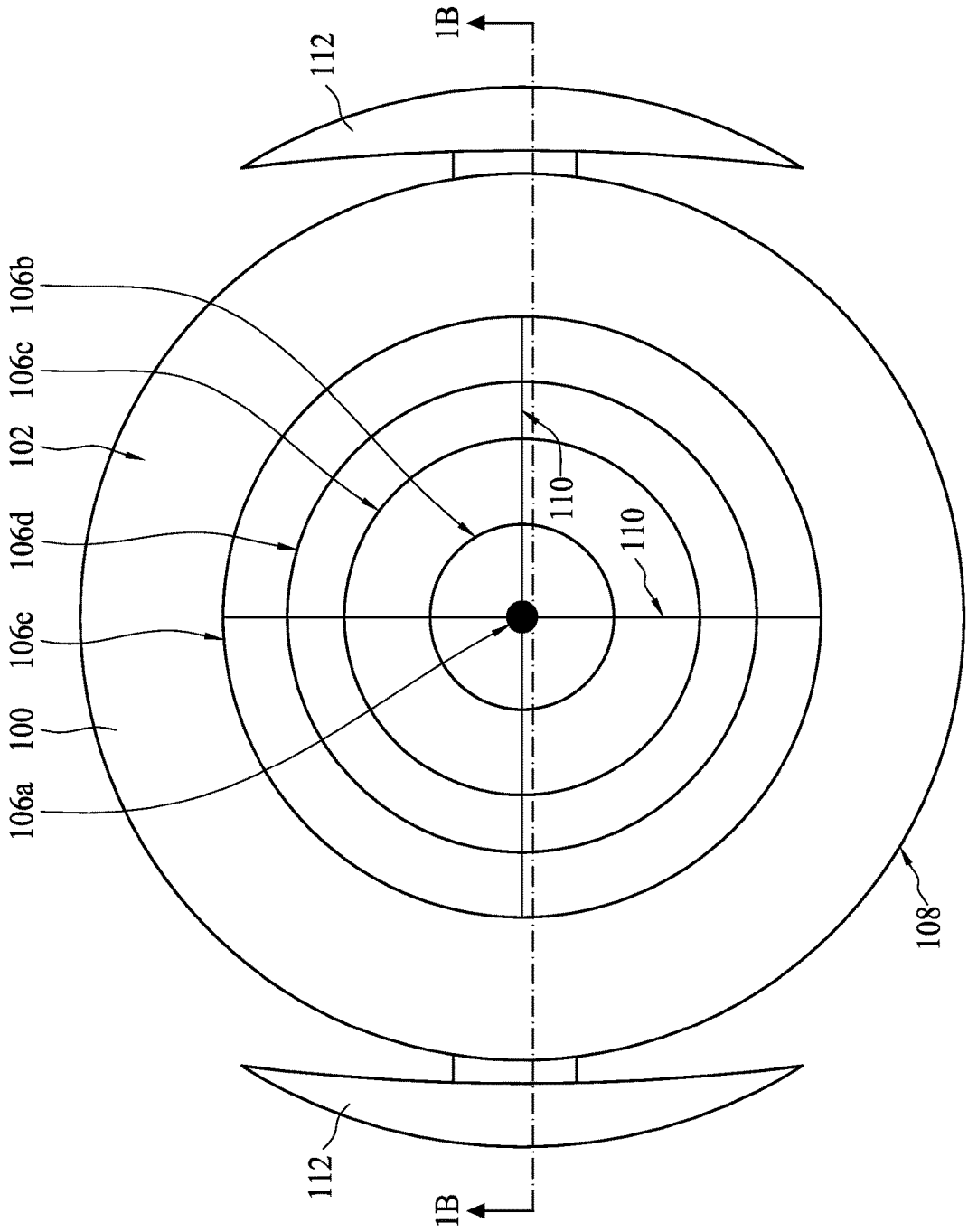

Figure 1A

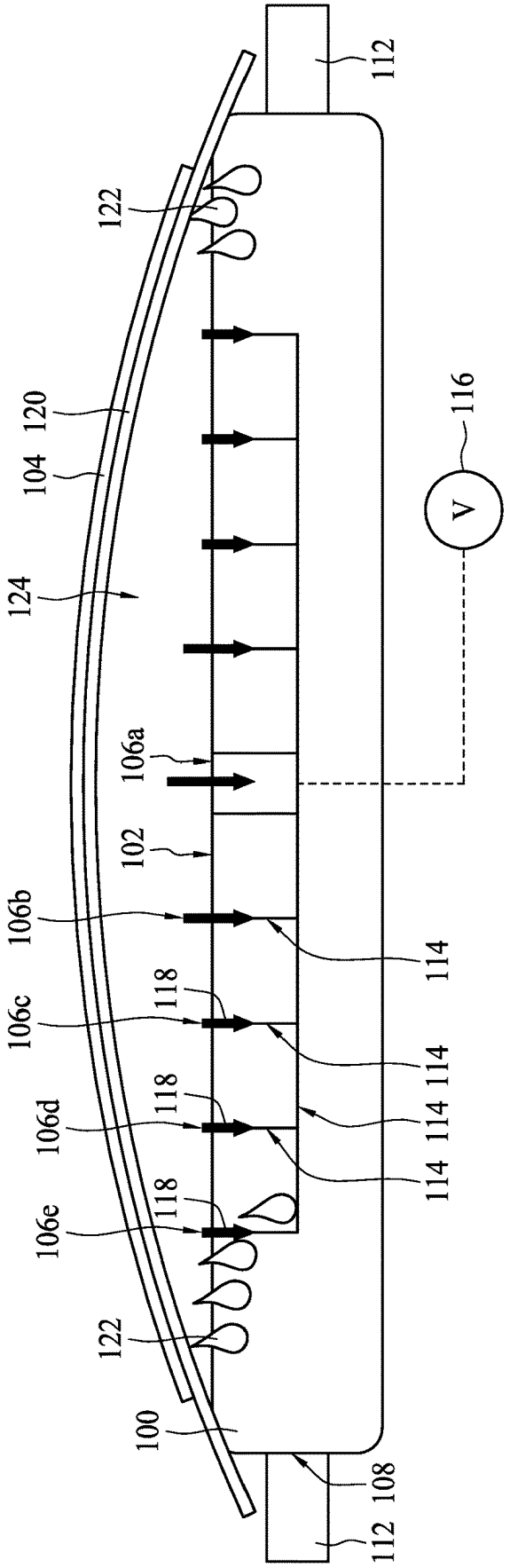
112
122
120
104
124
106a
102
106b
106c
106d
106e
118
118
118
114
114
114
114
122
100
108
112
116
V

Figure 1B

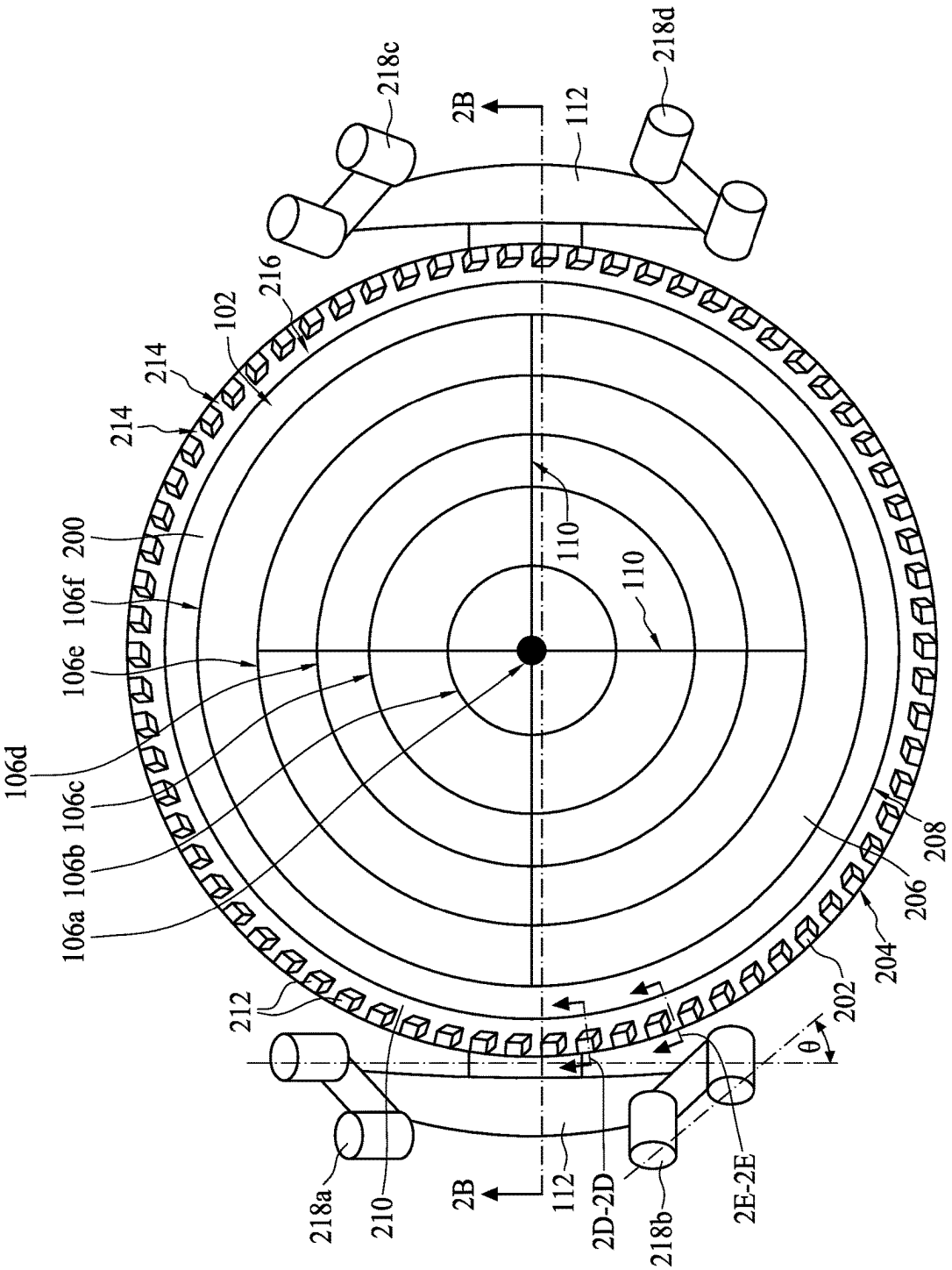
218c
218d
2B
112
216
102
214
214
200
106f
106e
106d
106c
106b
106a
110
110
212
210
218a
2B
112
2D-2D
218b
2E-2E
θ
202
204
206
208

Figure 2A

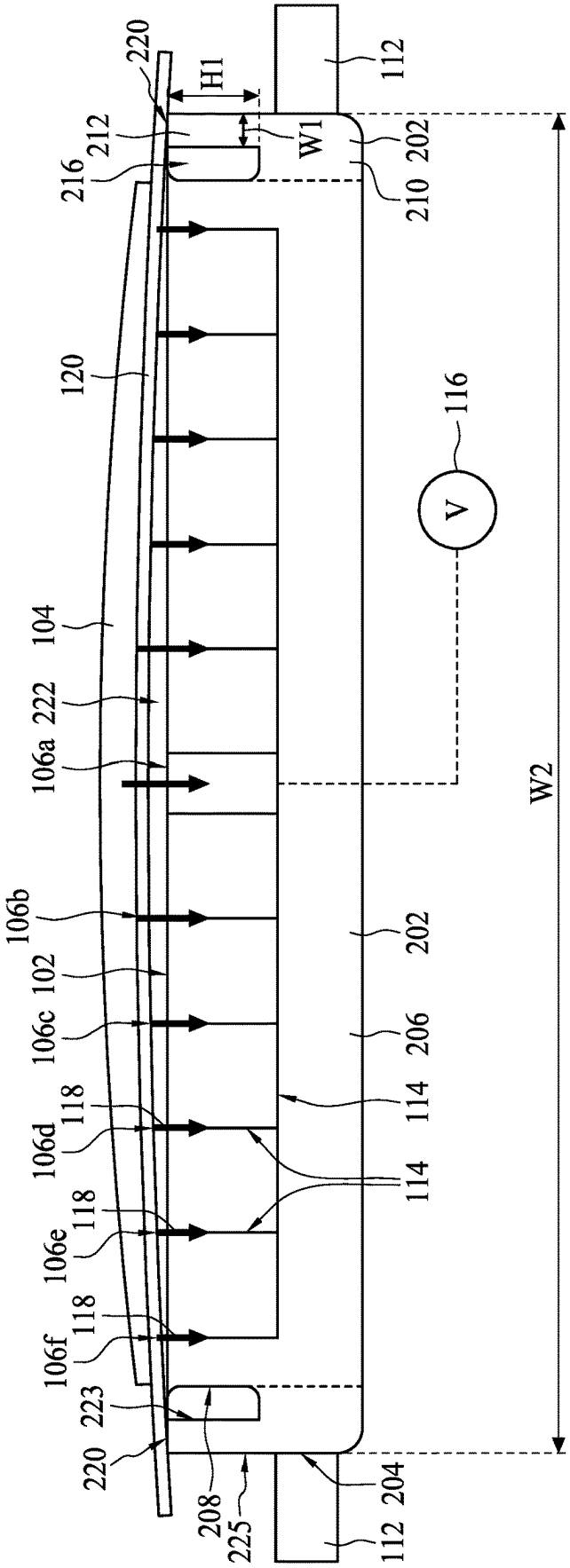
220
H1
112
212
W1
202
216
210
120
116
V
104
222
106a
W2
106b
202
102
106c
206
118
114
106d
114
118
106e
118
106f
223
220
208
225
204
112

Figure 2B

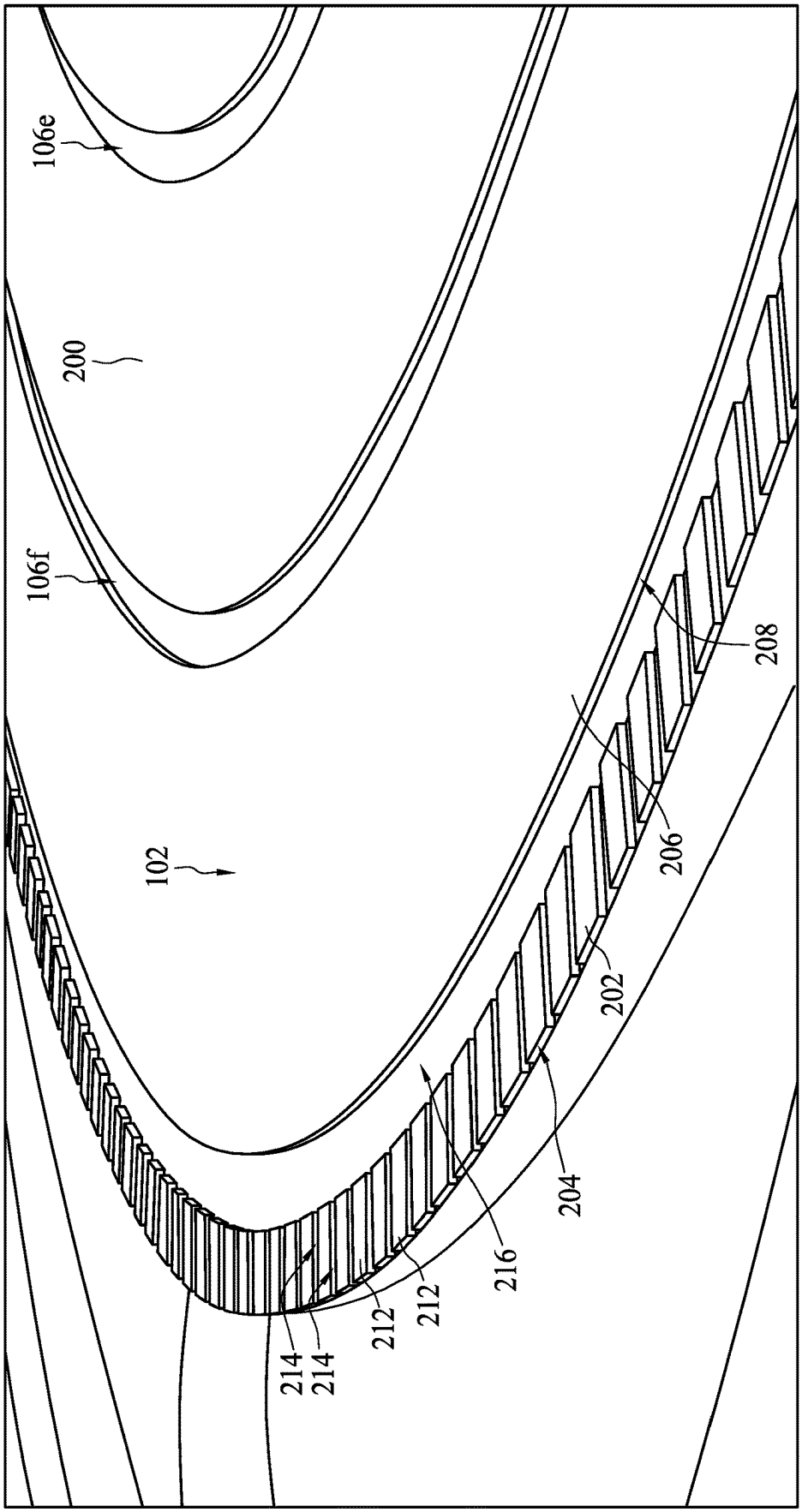

Figure 2C

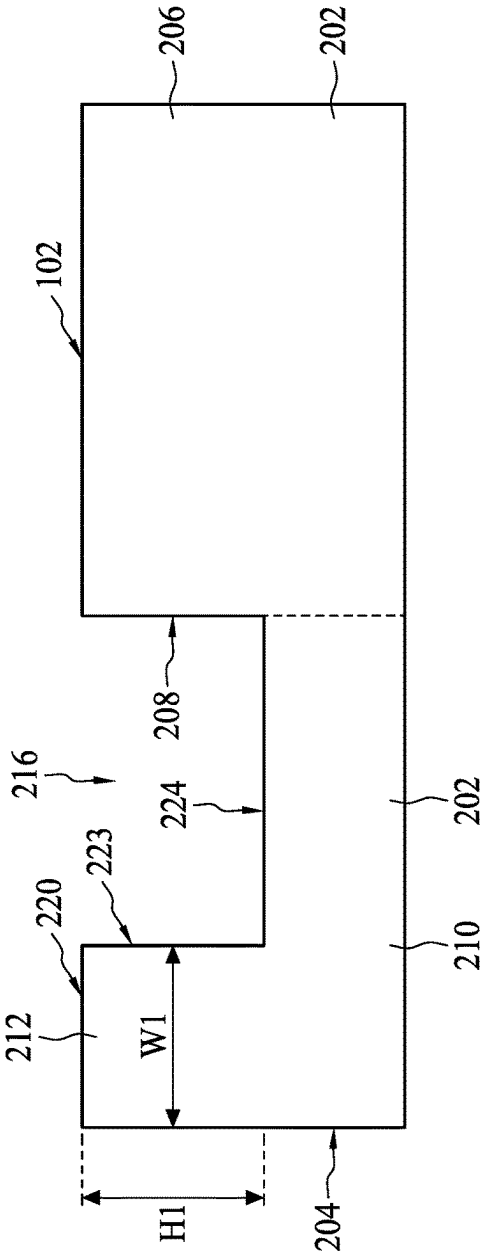

Figure 2D

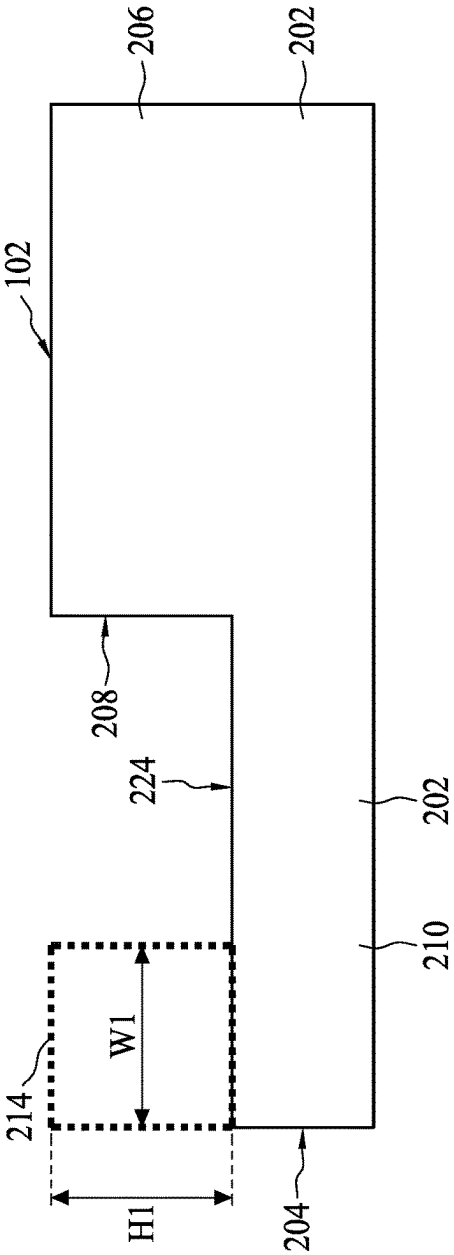

Figure 2E

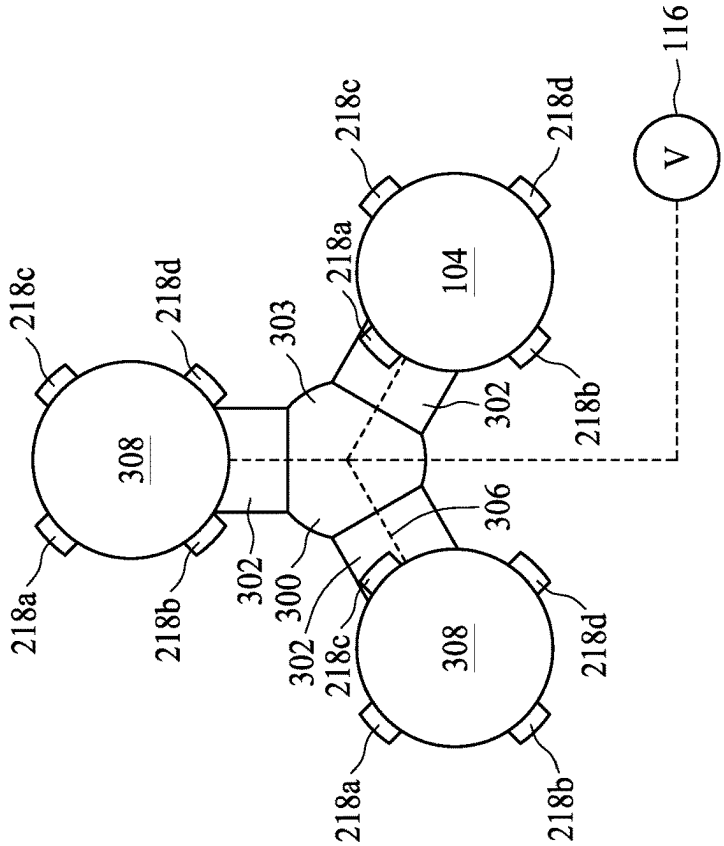

Figure 3B

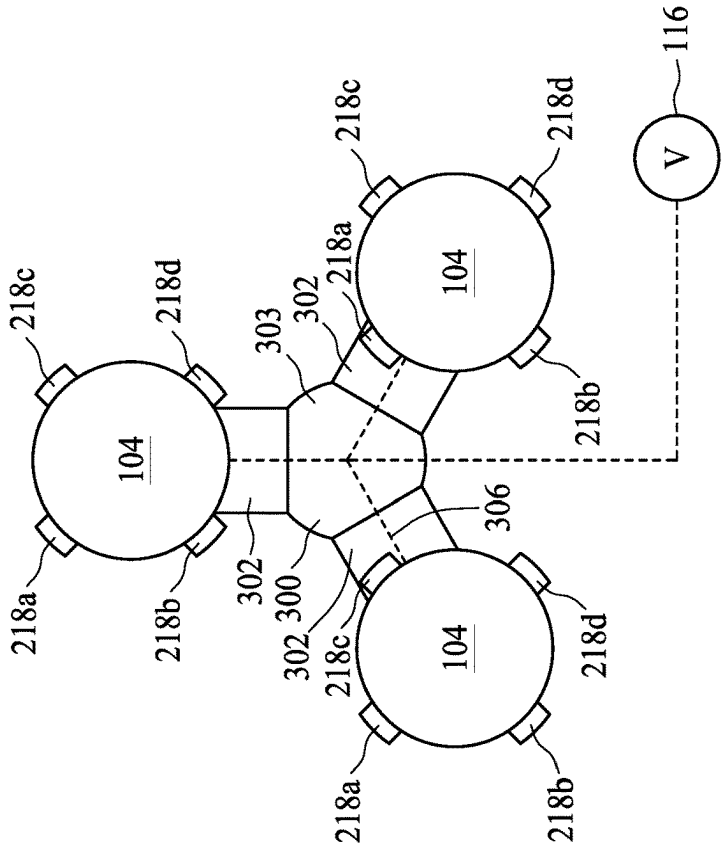

Figure 3A

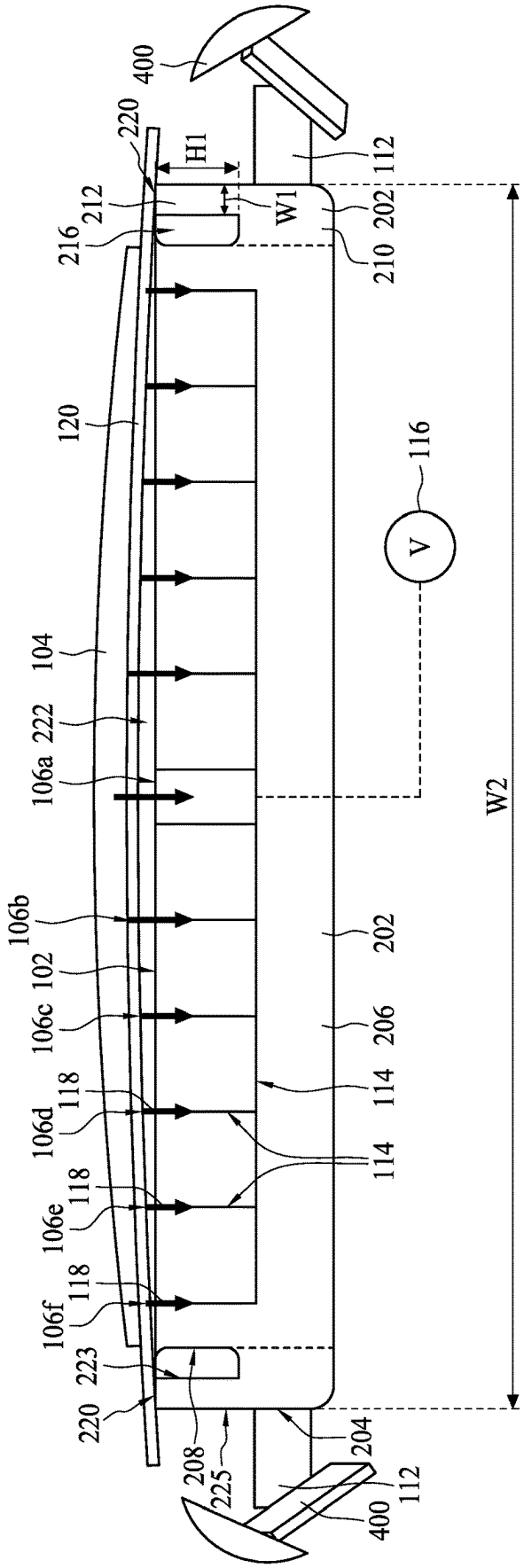
400
220
H1
212
216
W1
112
202
210
120
116
V
104
222
106a
W2
106b
102
202
106c
206
106d
118
114
114
106e
118
106f
118
223
220
208
225
204
112
400

Figure 4

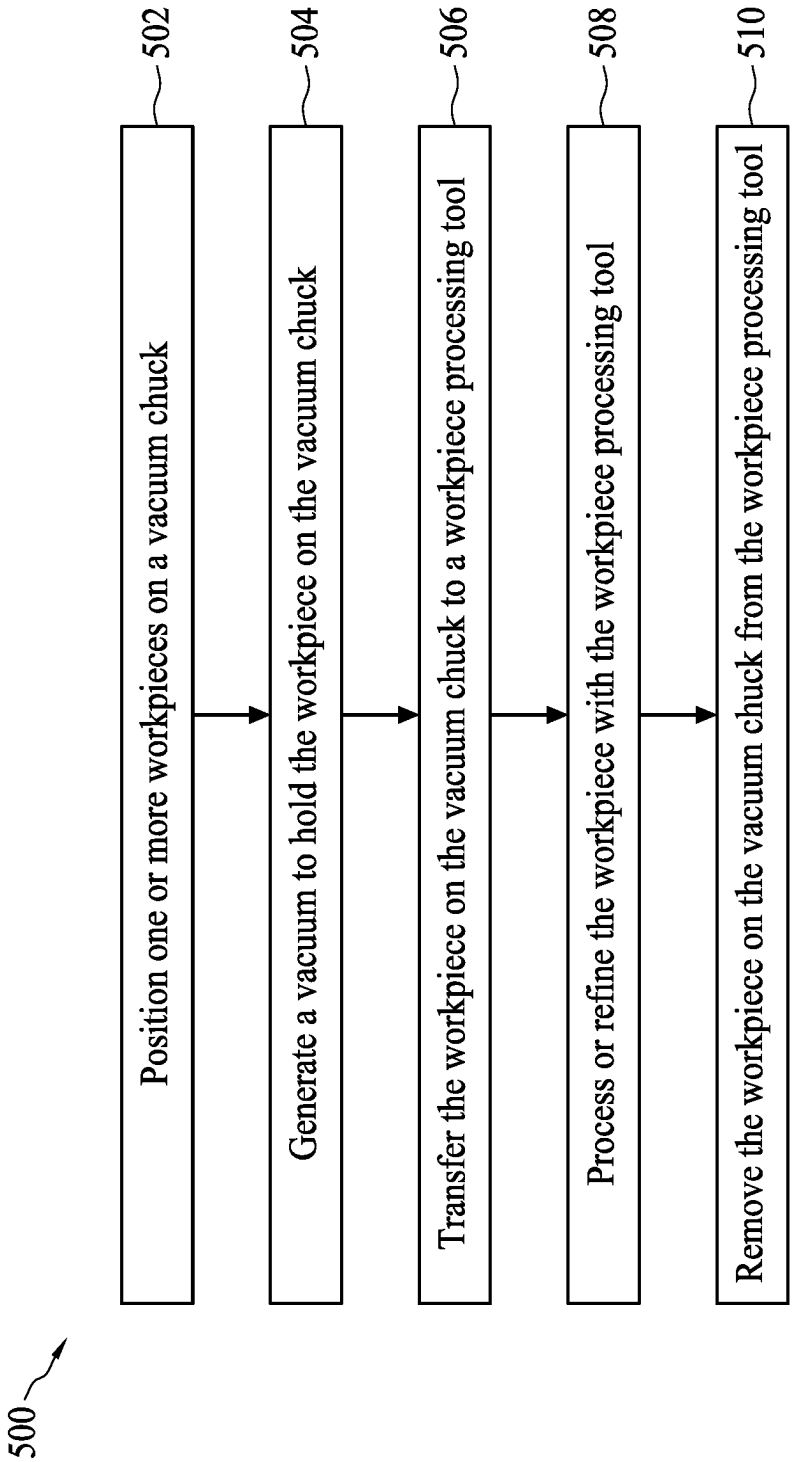
500
502
Position one or more workpieces on a vacuum chuck
504
Generate a vacuum to hold the workpiece on the vacuum chuck
506
Transfer the workpiece on the vacuum chuck to a workpiece processing tool
508
Process or refine the workpiece with the workpiece processing tool
510
Remove the workpiece on the vacuum chuck from the workpiece processing tool

Figure 5

VACUUM CHUCK

BACKGROUND

Generally, in the manufacture of semiconductor devices, semiconductor packages, or integrated circuits within a semiconductor manufacturing plant (FAB) several workpieces or components (e.g., wafers, pattern lenses, dummy wafers, etc.) are transported between and through various workpiece processing tools (e.g., etching and lithography tools, patterning tools, EUV lithography tools, etc.) to refine and process the workpieces. These processing steps performed by the workpiece processing tools within the FAB result in the formation of a large number of conductive structures, such as transistors, in highly complex arrangements in conjunction with a substrate (e.g., semiconductor or silicon). These processing steps also may result in the formation of dielectric layers, metal interconnects, vias, plugs, and other integrated circuit structures and components.

Generally, in the manufacture of electrical or semiconductor devices, robots are often utilized to transfer and transport these workpieces in the manufacture of the semiconductor devices, semiconductor packages, or integrated circuits throughout the FAB. For example, a workpiece may be positioned on a vacuum chuck of the transfer robot and a vacuum may be generated through the vacuum chuck to hold the workpiece on the vacuum chuck. This vacuum may be generated utilizing a vacuum source that is in fluid communication with vacuum lines present within the vacuum chuck.

BRIEF DESCRIPTION OF THE DRAWINGS

Aspects of the present disclosure are best understood from the following detailed description when read with the accompanying figures. It is noted that, in accordance with the standard practice in the industry, various features are not drawn to scale. In fact, the dimensions of the various features may be arbitrarily increased or reduced for clarity of discussion.

FIG. **1**A is a top plan view of an example of a vacuum chuck.

FIG. **1**B is a cross-sectional of the example of the vacuum chuck taken along line **1**B-**1**B as shown in FIG. **1**A.

FIG. **2**A is a top plan view of an example of a vacuum chuck, in accordance with some embodiments.

FIG. **2**B is a cross-sectional view of an example of the vacuum chuck taken along line **2**B-**2**B as shown in FIG. **2**A, in accordance with some embodiments.

FIG. **2**C is a partial, perspective view of an example of the vacuum chuck as shown in FIGS. **2**A and **2**B, in accordance with some embodiments.

FIG. **2**D is a zoomed in, cross-sectional view of the vacuum chuck taken along line **2**D-**2**D as shown in FIG. **2**A, in accordance with some embodiments.

FIG. **2**E is a zoomed in, cross-sectional view of the vacuum chuck taken along line **2**E-**2**E as shown in FIG. **2**A, in accordance with some embodiments.

FIG. **3**A is a top plan view of a robot including the vacuum chuck as shown in FIGS. **2**A-**2**E, in accordance with some embodiments.

FIG. **3**B is a top plan view of a robot including the vacuum chuck as shown in FIGS. **2**A-**2**E, in accordance with some embodiments.

FIG. **4** is a side view of the vacuum chuck as shown in FIGS. **2**A and **2**B mounted to the robot as shown in FIGS. **3**A and **3**B, in accordance with some embodiments.

FIG. **5** is a flowchart of a method of use of the vacuum chuck as shown in FIGS. **2**A-**2**E, in accordance with some embodiments.

DETAILED DESCRIPTION

The following disclosure provides many different embodiments, or examples, for implementing different features of the provided subject matter. Specific examples of components and arrangements are described below to simplify the present disclosure. These are, of course, merely examples and are not intended to be limiting. For example, the formation of a first feature over or on a second feature in the description that follows may include embodiments in which the first and second features are formed in direct contact, and may also include embodiments in which additional features may be formed between the first and second features, such that the first and second features may not be in direct contact. In addition, the present disclosure may repeat reference numerals and/or letters in the various examples. This repetition is for the purpose of simplicity and clarity and does not in itself dictate a relationship between the various embodiments and/or configurations discussed.

Further, spatially relative terms, such as "beneath," "below," "lower," "above," "upper" and the like, may be used herein for ease of description to describe one element or feature's relationship to another element(s) or feature(s) as illustrated in the figures. The spatially relative terms are intended to encompass different orientations of the device in use or operation in addition to the orientation depicted in the figures. The apparatus may be otherwise oriented (rotated 90 degrees or at other orientations) and the spatially relative descriptors used herein may likewise be interpreted accordingly.

Generally, semiconductor devices, semiconductor packages, or integrated circuits are manufactured within a semiconductor manufacturing or fabrication plant (FAB). These semiconductor devices, semiconductor packages, or integrated circuits may be manufactured by refining and processing workpieces such that the workpieces eventually become semiconductor devices, semiconductor packages, or integrated circuits. Multiple workpiece processing tools (e.g., etching tools, patterning tools, layer formation tools, sputtering tools, etc.) are utilized within the FAB to refine and process the workpieces to form the semiconductor devices, semiconductor packages, or integrated circuits. The workpieces may be transported through and between these workpiece processing tools within the FAB by robots, which may include vacuum chucks that are in fluid communication with a vacuum source. For example, a workpiece (e.g., a silicon wafer) may be positioned on one of the vacuum chucks, and the vacuum source, which is in fluid communication with the vacuum chuck, generates a vacuum at a surface of the vacuum chuck on which the workpiece is present. This vacuum holds the workpiece on the vacuum chuck, which may be referred to as a vacuum or seal effect. However, while being transported throughout the FAB and refined and processed by the workpiece processing tools, residual fluid or moisture utilized to refine or process the workpiece may remain on the workpiece after processing when present on the vacuum chuck. This residual fluid or moisture on the workpiece may become trapped between the workpiece and the surface of the vacuum chuck on which the workpiece is being transported by the transfer robot to which

the vacuum chuck is mounted. This residual fluid or moisture between the workpiece and the surface of the vacuum chuck generally increases an amount of warpage within the workpiece. This warpage of the workpiece, which may be due to the presence of the residual fluid or moisture, increases the likelihood of the workpiece being damaged due to the warpage or increases the likelihood of manufacturing a defective semiconductor package, semiconductor device, or integrated circuit. The warpage of the workpiece, which may be due to the residual fluid or moisture, increases the likelihood of the workpiece falling off or shifting on the vacuum chuck while being transported within the FAB as the vacuum generated may not be strong enough to hold or maintain the workpiece's position on the vacuum chuck.

In view of the above, at least some of the present disclosure is directed to devices, systems, and methods to prevent warpage of workpieces as well as prevent improper positioning of the workpieces on vacuum chucks in accordance with the present disclosure when being transferred or transported through a semiconductor manufacturing or fabrication plant (FAB). For example, a vacuum chuck in accordance with some embodiments of the present disclosure includes a moisture gate structure or portion. This moisture gate structure or portion provides a pathway through which residual fluid or moisture that remains on the workpiece may escape or evaporate through when the workpiece is present on the vacuum chuck in accordance with some embodiments of the present disclosure. The escaping of the residual fluid or moisture through the drainage structure or portion of the vacuum chuck in accordance with some embodiments of the present disclosure reduces or mitigates an amount of warpage of the workpiece. Reducing the amount of warpage of the workpiece when present on the vacuum chuck, reduces the likelihood of the workpiece falling off or shifting when present on the vacuum chuck when being transferred or transported through the FAB, and increases a yield number of semiconductor devices, semiconductor packages, or integrated circuits that are manufactured within tolerance.

In other words, this reduction in the amount of warpage of the workpieces by utilizing the vacuum chuck with the moisture gate structure or portion, which may also be referred to as a drainage structure or portion, of the present disclosure, increases a yield number of the FAB such that a greater number of semiconductor devices, semiconductor packages, or integrated circuits are manufactured within tolerance and may be sold to customers increasing profitability and reducing waste expenses. For example, this prevention of warpage of the workpiece by the presence of the moisture gate structure or portion of the vacuum chuck allows a vacuum generated through the vacuum chuck by a vacuum source to be strong enough to hold and maintain the position of the workpiece on the vacuum chuck. In other words, the vacuum or seal effect is stronger reducing the likelihood of the workpiece shifting out of place when present on vacuum chuck. This mitigating or reducing the likelihood of shifting of the workpiece may increase productivity of the FAB as the workpiece is properly aligned when positioned within a workpiece processing tool either when present on the vacuum chuck or when removed from the vacuum chuck.

In view of the above, a vacuum chuck in accordance with some embodiments of the present disclosure may include one or more guide structures, portions, or frames that prevent the workpiece from falling off or shifting when present on the vacuum chuck. For example, the one or more guide structures, portions, or frames may include one or more guide protrusions or extensions that are adjacent to an edge of the workpiece. These guide protrusions or extensions may contact the edge of the workpiece when transferring or transporting the workpiece on the vacuum chuck between various locations within the FAB. Reducing the shifting of the workpiece when present on the vacuum chuck, as well as preventing the workpiece from falling off the vacuum chuck by the presence of the one or more guide structures, portions, or frames, increases the yield number of semiconductor devices, semiconductor packages, or integrated circuits that are manufactured by the FAB within tolerance.

FIG. **1**A is a top plan view of an example of a vacuum chuck **100**. The vacuum chuck **100** includes a workpiece surface **102** on which a workpiece **104** (see FIG. **1**B) may be positioned for transferring or transporting the workpiece **104** through a semiconductor manufacturing or fabrication plant (FAB). The workpiece **104** may be a production wafer made of a silicon material, a semiconductor material, or some other suitable type of material. The workpiece **104** may have a diameter of 300-mm or may have some other suitable diameter. A plurality of vacuum openings **106***a*, **106***b*, **106***c*, **106***d*, **106***e* are present at the workpiece surface **102**. The plurality of vacuum openings **106***a*, **106***b*, **106***c*, **106***d*, **106***e* includes a first opening **106***a*, a second opening **106***b*, a third opening **106***c*, a fourth opening **106***d*, and a fifth opening **106***e*. The first opening **106***a* is a central opening that is present at a center of the vacuum chuck **100**, and the second, third, fourth, and fifth openings **106***b*, **106***c*, **106***d*, **106***e* are peripheral openings that are successively spaced apart from the first opening **106***a*. The second, third, fourth, and fifth openings **106***b*, **106***c*, **106***d*, **106***e* successively surround each other and all surround the first opening **106***a*. The plurality of openings **106***a*, **106***b*, **106***c*, **106***d*, **106***e* are spaced inward from a peripheral sidewall **108** of the vacuum chuck **100**.

A pair of transverse vacuum openings **110** extend from the first opening **106***a* to the fifth opening **106***e*. A first one of the pair of transverse vacuum openings **110** is transverse to a second one of the pair of transverse vacuum openings **110**. The pair of transverse vacuum openings **110** are spaced inward from the peripheral sidewall **108** of the vacuum chuck **100**.

A pair of opposing mounting structures or portions **112** extend outward from the peripheral sidewall **108** of the vacuum chuck **100**. The pair of opposing mounting structures **112** includes a first one at the left-hand side of the vacuum chuck **100**, a second one at the right-hand side of the vacuum chuck **100**, and the first one is opposite to the second one. The mounting structures **112** are configured to be utilized in mounting the vacuum chuck **100** to a transfer robot, which may be utilized to transfer or transport one or more workpieces within the FAB. For example, one or more clamps **400** may be utilized to mount the vacuum chuck **100** to a robot **300** (See FIGS. **3**A, **3**B, and **4** of the present disclosure).

FIG. **1**B is a cross-sectional view of the vacuum chuck **100** taken along lines **1**B-**1**B as shown in FIG. **1**A. A plurality of vacuum lines **114** that are in fluid communication with the plurality of vacuum openings **106***a*, **106***b*, **106***c*, **106***d*, **106***e*. For example, each one of the plurality of vacuum lines **114** is in fluid communication with at least one of the plurality of vacuum openings **106***a*, **106***b*, **106***c*, **106***d*, **106***e*, respectively. The plurality of vacuum lines **114** and the plurality of vacuum openings **106***a*, **106***b*, **106***c*, **106***d*, **106***e* are in fluid communication with a vacuum source **116** (e.g., a vacuum pump or some other suitable type of vacuum

generation device or system), which is configured to generate a vacuum **118** through the plurality of vacuum lines **114** and the plurality of vacuum openings **106***a*, **106***b*, **106***c*, **106***d*, **106***e*. The vacuum **118** is represented by arrows **118**. The vacuum **118** generates suction such that the workpiece **104** is held in place on the vacuum chuck **100**.

A carrier or support **120** is present on a backside surface of the workpiece **104**. The carrier **120** may be present to provide support to the workpiece **104**. The carrier **120** may be a tape, for example, a double-sided tape that is utilized to assist in holding the workpiece **104** on the vacuum chuck **100** along with the vacuum **118**.

When the workpiece **104** is being refined and processed through one or more workpiece processing tools (e.g., etching and lithography tools, patterning tools, EUV lithography tools, etc.) within the FAB, a residual fluid or moisture **122** may build up on or be present on the workpiece **104** and/or the carrier **120**. The residual fluid or moisture **122** present on the workpiece **104** or the carrier **120** becomes trapped within a space **124** between the carrier **120** and the workpiece surface **102**. The residual fluid or moisture **122** results in the workpiece **104** and the carrier **120** warping such that the workpiece **104** and the carrier **120** have a radius of curvature as shown in FIG. **1**B. This warpage of the workpiece **104** and the carrier **120** resulting in the radius of curvature of the workpiece **104** as shown in FIG. **1**B may increase the likelihood that the workpiece **104** will be damaged and may increase the likelihood the workpiece **104** will fall off the vacuum chuck **100** or shift out of place on the vacuum chuck **100**. The increased likelihood of falling or shifting of the workpiece **104** may be result of the space **124** increasing in size due to the warpage of the workpiece **104** such that vacuum **118** generated is not strong enough to hold the workpiece **104** in position on the vacuum chuck **100**.

A point along the backside surface of the carrier **120** furthest away from the workpiece surface **102** may be equal to or less than 6-millimeters (mm). In some embodiments, the point along the backside surface of the carrier **120** furthest away from the workpiece surface **102** may be greater than 6-mm. The amount of warpage may depend on the size and shape of the workpiece **104** and the carrier **120**, respectively.

This increase in the likelihood of damaging the workpiece **104** as well as the increase in the likelihood of the workpiece **104** falling or shifting generally decreases a yield number of usable semiconductor devices, semiconductor packages, or integrated circuits that are manufactured utilizing the FAB. For example, if cracks or scratches propagate on or within the workpiece **104**, a semiconductor package or die manufactured utilizing the workpiece **104** may not function as intended and/or may be out of tolerance such that the semiconductor package or die is defective. This out-of-tolerance or defective semiconductor package is not capable of being sold to a customer for profit. Similarly, if the workpiece **104** is out of position on the vacuum chuck **200**, the workpiece **104** may be improperly patterned due to the misalignment resulting in a semiconductor package or die manufactured utilizing the workpiece that is manufactured out of tolerance and/or defective. This out-of-tolerance or defective semiconductor package is not capable of being sold to a customer for profit.

FIG. **2**A is a top plan view of an example of a vacuum chuck **200**, in accordance with some embodiments. The vacuum chuck **200** as shown in FIG. **2**A has some of the same or similar features of the vacuum chuck **100** as shown in FIGS. **1**A and **1**B. Accordingly, these same or similar features of the vacuum chuck **200** as compared to the vacuum chuck **100** have the same or similar reference numerals.

As shown in FIG. **2**A, the vacuum chuck **200** includes the plurality of vacuum openings **106***a*, **106***b*, **106***c*, **106***d*, **106***e*. However, unlike the plurality of vacuum openings **106***a*, **106***b*, **106***c*, **106***d*, **106***e* of the vacuum chuck **100** as shown in FIGS. **1**A and **1**B in which there are five total, the plurality of vacuum openings **106***a*, **106***b*, **106***c*, **106***d*, **106***e* of the vacuum chuck **200** includes a sixth vacuum opening **106***f*, which surrounds the first, second, third, fourth, and fifth vacuum openings **106***a*, **106***b*, **106***c*, **106***d*, **106***e* of the plurality of vacuum openings **106***a*, **106***b*, **106***c*, **106***d*, **106***e*. The vacuum chuck **200** may include more vacuum openings relative to the vacuum chuck **100** due to the presence of a moisture gate portion or structure **202** at a peripheral edge **204** of the vacuum chuck **200**. The peripheral edge **204** may be a sidewall of the vacuum chuck **200**. The moisture gate portion **202** may be referred to as a moisture escape structure, a moisture release structure, a water escape structure, a drainage structure, or some other reference to the moisture gate portion or structure **202** that allows moisture to escape from underneath a workpiece when present over the workpiece surface **102** of the vacuum chuck **200**. The moisture gate portion **202** extends outward from a central vacuum portion or structure **206**. For example, the moisture gate portion **202** is a peripheral portion of the vacuum chuck **200** that surrounds the central vacuum portion **206** and extends from a sidewall **208** of the central vacuum portion **206**. The sidewall **208** may be at an edge of the central vacuum portion **206**.

A base portion **210** of the moisture gate portion **202** extends laterally outward from the sidewall **208** of the central vacuum portion **206**. The base portion **210** may be referred to as a cantilever portion, a shelf portion, a ledge portion, a lip portion, or some other similar or like reference to the base portion **210** protruding or extending laterally outward from the sidewall **208** of the central vacuum portion **206**.

A plurality of protrusions or extensions **212** protrude or extend outward from the base portion **210**. Each one of the plurality of protrusions **212** is spaced apart from adjacent ones of the plurality of protrusions **212**. For example, a plurality of channels **214** are present between adjacent ones of the plurality of protrusions **212** such that the plurality of channels **214** are separate and distinct from each other. In other words, each one of the plurality of channels **214** is between pairs of adjacent ones of the plurality of protrusions **212**. In some embodiments, the plurality of protrusions are integral with the base portion such that the base portion **210** and the plurality of protrusions **212** are made of a single continuous material. In some embodiments, the plurality of protrusions **212** may be made of a moisture resistant or proof material and the plurality of protrusions **212** are coupled to a surface **224** (see FIGS. **2**D and **2**E) of the base portion **210**.

Each one of plurality of channels **214** extends laterally outward from a main channel **216** that surrounds the central vacuum portion **206** and that extends from the sidewall **208** of the central vacuum portion **206** to the plurality of protrusions **212**. The main channel **216** is in fluidic communication with each one of the plurality of channels **214**. The workpiece surface **102** is a surface of the central vacuum portion **206** of the vacuum chuck **200**. The main channel **216** and the plurality of channels **214** are configured to act as fluid pathways that allow moisture and/or fluids to escape or

evaporate through to reduce warpage in a workpiece when present on the workpiece surface **102** of the vacuum chuck **200**.

In this embodiment as shown in FIG. **2**A, the main channel **216** has a circular profile that extends around a perimeter of the central vacuum portion **206** as the central vacuum portion **206** has a circular profile. However, it will be readily appreciated that the profile of the main channel **216** may be different based on the profile of the central vacuum portion **206**. For example, if the central vacuum portion **206** has a rectangular or square profile, the main channel **216** may similarly have a rectangular or square profile that extends around a perimeter of the central vacuum portion **206**. In other words, the main channel **216** extends around a boundary of the central vacuum portion **206** such that the main channel **216** surrounds the central vacuum portion **206**.

The vacuum chuck **200** includes the pair of opposing mounting structures or portions **112**. However, unlike the vacuum chuck **100**, ones of a plurality of guide portions **218***a*, **218***b*, **218***c*, **218***d* protrude or extend outward from each of the pair of opposing mounting structures **112**, respectively. As shown in FIG. **2**A, there are four of the plurality of guide portions **218***a*, **218***b*, **218***c*, **218***d*. However, in some alternative embodiments, there may be a greater or a lesser number of ones of the plurality of guide portions **218***a*, **218***b*, **218***c*, **218***d* than the four as shown in FIG. **2**A.

A first guide portion **218***a* and a second guide portion **218***b* protrude or extend outward from the mounting structure **112** at the left-hand side of the vacuum chuck **200** based on the orientation as shown in FIG. **2**A, and a third guide portion **218***c* and a fourth guide portion **218***d* protrude or extend outward from the mounting structure **112** at the right-hand side of the vacuum chuck **200**. Each one of the plurality of guide portions **218***a*, **218***b*, **218***c*, **218***d* is angled by an angle θ relative to a vertical axis that extends in a direction directed from opposing ones of the guide portions **218***a*, **218***b* at the left-hand side of the vacuum chuck **200**. The angle θ may be 5-degrees, 10-degrees, 15-degrees, 30-degrees, 40-degrees, or some other suitable angle that may be selected based on a size, shape, and profile of a workpiece to be positioned on the vacuum chuck **200**. This workpiece may be coupled to a carrier similar to the carrier **120**.

The plurality of guide portions **218***a*, **218***b*, **218***c*, **218***d* are configured to act as guides such that a workpiece is properly positioned on vacuum chuck **200**, and to act as barriers to prevent the workpiece on the vacuum chuck **200** from falling off or shifting too much when being transported utilizing the vacuum chuck **200** or when being processed or refined when the workpiece is present on the vacuum chuck **200**. In other words, the plurality of guide portions **218***a*, **218***b*, **218***c*, **218***d* reduces the likelihood of the workpiece being misaligned when being placed on the vacuum chuck **200**, and the plurality of guide portions **218***a*, **218***b*, **218***c*, **218***d* reduces the likelihood of the workpiece being damaged when present on the vacuum chuck **200** as the likelihood of the workpiece falling off or shifting too much when present on the vacuum chuck **200** is reduced.

FIG. **2**B is a cross-sectional view of the vacuum chuck **200** taken along line **2**B-**2**B as shown in FIG. **2**A. The vacuum chuck **200** includes the plurality of vacuum lines **114**, and each one of the plurality of vacuum lines **114** is in fluid communication with at least one of the plurality of vacuum openings **106***a*, **106***b*, **106***c*, **106***d*, **106***e*, **106***f* of the vacuum chuck **200**. The vacuum source is in fluid communication with the plurality of vacuum lines **114** such that the workpiece **104** may be held in position by the vacuum **118** generated by the vacuum source **116** through the plurality of vacuum lines **114** and the plurality of vacuum openings **106***a*, **106***b*, **106***c*, **106***d*, **106***e*, **106***f*. The vacuum **118** generated is represented by the arrows **118**. The vacuum **118** generates suction such that the workpiece **104** to which the carrier **120** is coupled is held in place on the vacuum chuck **200**.

Each one of the plurality of protrusions **212** includes an end surface **220** on which the carrier **120** is present and is supported by when present on the vacuum chuck **200**. For example, the end surfaces **220** come into contact with a peripheral region of a backside surface of the carrier **120** such that, when present on the vacuum chuck **200**, the workpiece **104** and the carrier **120** are supported by the end surfaces **220** of the plurality of protrusions **212**. In some embodiments, the end surfaces **220** of the plurality of protrusions **212** may be coplanar with the workpiece surface **102**. In some alternative embodiments, the end surfaces **220** of the plurality of protrusions may be slightly raised relative to the workpiece surface **102** such that the residual fluid or moisture **122** may more readily escape through the plurality of channels **214** and the main channel **216**, respectively, as the carrier **120** may be further spaced apart from the workpiece surface **102**. However, this raised distance is balanced with respect to the vacuum **118** generated such that the vacuum or seal effect maintains a strong hold on the workpiece and the carrier **120** when present on the vacuum chuck **200**.

Heights H**1**, widths W**1**, and lengths of the plurality of protrusions **212** may be adjusted and adapted to more readily allow the escape or evaporation of the residual fluid or moisture **122**, respectively. For example, each one of the plurality of protrusions **212** has the height H**1**, the width W**1** that is transverse to the height H**1**, and the length that is transverse to both the height H**1** and the width W**1**. The height H**1** of each one of the plurality of protrusions **212** extends from the base portion **210** to the corresponding end surface **220** of the plurality of protrusions **212**, respectively. The width W**1** of each one of the plurality of protrusions **212** extends from an inner sidewall **223** of one of the plurality of protrusions **212** to an outer sidewall **225** of the one of the plurality of protrusions **212**. While not readily visible in FIG. **2**B, the length of each one of the plurality of protrusions extends inward or outward of the page such that the length is transverse to both the height H**1** and the width W**1**. In some embodiments, the height H**1** may be equal to or less than 20-mm (millimeters), the width W**1** may be equal to or less than 100-mm, and the length may be equal to or less than 100-mm. In some embodiments, in the plurality of protrusions **212** the width W**1** may be equal to 1.9-mm and the height H**1** may be equal to 1.9-mm.

Unlike the workpiece **104** as shown in FIG. **1**B in which a relatively large amount of warpage (e.g., flexure and bending) occurred due to the residual fluid or moisture **122** built up and present on the workpiece **104**, the workpiece **104** as shown in FIG. **2**B has no or has a miniscule amount of warpage due to the moisture gate portion **202** of the vacuum chuck **200** being present. For example, the main channel **216** and the plurality of channels **214** of the moisture gate portion **202** allows the residual fluid or moisture **122**, which is on or along the workpiece **104** and the carrier **120**, to escape or evaporate as the residual fluid or moisture **122** may readily pass through the main channel **216** and the plurality of channels **214** of the moisture gate portion **202**.

A space **222** is present between the backside surface of the carrier **120** and the workpiece surface **102** of the central vacuum portion **206**. The space **222** is similar to the space **124**, however, the space **222** as shown in FIG. **2**B is smaller than the space **124** as the residual fluid or moisture **122** is capable of escaping through the main channel **216** and the plurality of channels **214**. This results in a miniscule or non-existent amount of warpage in the workpiece **104** and the carrier **120**. In other words, in the event of a miniscule amount of warpage, a radius of curvature of the workpiece **104** and the carrier **120** as shown in FIG. **2**B is less than the warpage in the workpiece **104** and the carrier **120** as shown in FIG. **1**B. This miniscule or non-existent warpage in the workpiece **104** and the carrier **120** as shown in FIG. **2**B relative to FIG. **1**B results in the space **222** as shown in FIG. **2**B being smaller than the space **124** as shown in FIG. **1**B.

This reduced warpage in the workpiece **104** and the carrier **120** as shown in FIG. **2**B relative to as shown in FIG. **1**B reduces the likelihood of damage propagating within the workpiece **104** and/or the carrier **120**. For example, there is a reduced likelihood of crack propagation occurring within the workpiece **104** and the carrier **120** as there is less bending and flexing due to the miniscule or non-existent warpage as shown in FIG. **2**B, and there is less stress and strain that occurs within the workpiece **104** and carrier **120** due to the miniscule or non-existent warpage as shown in FIG. **2**B.

This reduced warpage in the workpiece **104** and the carrier as shown in FIG. **2**B relative to as shown in FIG. **1**B reduces the likelihood of workpiece falling off or shifting while the workpiece **104** and the carrier **120** are present on the vacuum chuck **200**. When utilizing the vacuum chuck **200**, the miniscule or non-existent warpage in the workpiece **104** and the carrier **120** as shown in FIG. **2**B results in a first surface area at a region of the backside surface of the carrier **120** being in contact with the vacuum chuck **200**, and results in the vacuum **118** maintaining a good hold on the workpiece **104** and the carrier **120**. When utilizing the vacuum chuck **100**, the larger amount of warpage in the workpiece **104** and the carrier **120** as shown in FIG. **1**B results in a second surface area at a region of the backside surface of the carrier **120** being in contact with the vacuum chuck **100**. The first surface area is larger than the second surface area such that the workpiece **104** and the carrier **120** will shift less or not shift at all when present on the vacuum chuck **200**. This shifting of the workpiece **104** and the carrier **120** may be further limited by the presence of the plurality of guide portions **218***a*, **218***b*, **218***c*, **218***d*. A width of the guide portions **218***a*, **218***b*, **218***c*, **218***d* may be equal to or less than 50-mm.

The reduced likelihood of shifting and reduced amount of warpage of the workpiece **104** and the carrier **120** when utilizing the vacuum chuck **200** reduces the likelihood of misalignment of the workpiece **104** and the carrier **120** when being refined or processed within a workpiece processing tool. For example, if the workpiece **104** and the carrier **120** on the vacuum chuck **200** are positioned within a laser patterning tool, the small to no shifting of the workpiece **104** when present on the vacuum chuck **200** increases the likelihood of proper alignment of the workpiece **104** relative to the laser such that the workpiece **104** is accurately and properly patterned.

Alternatively, when the workpiece **104** and the carrier **120** are on the vacuum chuck **100** and are positioned within the laser patterning tool, the workpiece **104** and the carrier **120** may have an increased likelihood of shifting or warpage. For example, this increase in the likelihood of shifting and warpage increases the likelihood of misalignment between the laser of the laser patterning tool and the workpiece **104** when being positioned within the laser patterning tool utilizing the vacuum chuck **100**. If misalignment occurs, which is more likely with the vacuum chuck **100** than the vacuum chuck **200**, the workpiece **104** may be patterned in an unexpected manner or inaccurately such that a semiconductor package or device may be manufactured outside of pre-determined tolerances (e.g., quality control). The manufacture of insufficient quality semiconductor packages or devices results in increased waste costs of a FAB.

The vacuum chuck **200** has a width W**2** that extends from opposing points of a pair of points of the vacuum chuck **200** as shown in FIG. **2**B. When the vacuum chuck **200** has a circular profile, the width W**2** is a diameter of the vacuum chuck **200**. The width W**2** may be equal to or greater than 150-mm. In some embodiments, the width W**2** may be slightly larger than a width or diameter of the workpiece **104** on the carrier **120**, and the width W**2** may be slightly less than a width or diameter of the carrier **120**. For example, this dimensional relationship may be readily seen in the embodiment as shown FIG. **2**B of the present disclosure.

FIG. **2**C is a partial, perspective view of an example of the vacuum chuck **200** as shown in FIGS. **2**A and **2**B, in accordance with some embodiments. As may be more readily seen in FIG. **2**C, each one of the plurality of protrusions **212** is spaced apart from adjacent ones of the plurality of protrusions **212** by ones of the plurality of channels **214**, respectively. Each one of the adjacent ones of the plurality of protrusions **212** may be spaced apart by a distance equal to or less than 50-mm. In other words, the plurality of channels **214** may have a length extending between sidewalls of adjacent ones of the plurality of protrusions **212**. In some embodiments, the length may be equal to or less than 50-mm. For example, the length of each one of the plurality of channels **214** may be less than 1.3-mm and a pitch measurement between adjacent ones of the plurality of protrusions **212** may be equal to 1.3-mm. The length of the plurality of channels **214** and the pitch measurement between adjacent ones of the plurality of protrusions **212** may be adjusted and adapted to allow the residual moisture **122** to escape and evaporate through the plurality of channels **214**, respectively. The dimensions of the moisture gate portion **202** of the vacuum chuck **200** and the vacuum chuck **200** may be selected depending on the size and shape of the workpiece **104** and the carrier **120**.

A width of the plurality of channels **214** is transverse to the length of the plurality of channels **214** and extends away from the peripheral edge **204** to the inner sidewall **223**. In some embodiments, the width of the plurality of channels **214** may range from 1-mm to 3-mm, and may be equal to the upper and lower ends of this range. The width of the plurality of channels **214** may be adjusted to allow for the residual moisture or fluid to escape or evaporate. A height of the plurality of channels **214** may be equal to the height H**1**.

FIG. **2**D is a zoomed in, cross-sectional view of the vacuum chuck **200** taken along line **2**D-**2**D as shown in FIG. **2**A. The line **2**D-**2**D is along a respective one of the plurality of protrusions **212**. Each one of the plurality of protrusions **212** includes an inner sidewall **223** that is transverse to a corresponding one of the plurality of end surfaces **220** of the plurality of protrusions **212**. The inner sidewalls **223** face towards the sidewall **208** of the central vacuum portion **206**. The inner sidewalls **223** extend from the surface **224** of the base portion **210** to corresponding ones of the end surfaces **220** of the plurality of protrusions **212**. The surface **224** of the base portion **210** is transverse to the inner sidewalls **223**

and transverse to the sidewall **208** of the central vacuum portion **206**. The sidewall **208** of the central vacuum portion **206**, the inner sidewalls **223** of the plurality of protrusions **212**, and the surface **224** of the base portion **210** at least partially delimit the main channel **216**.

FIG. **2**E is a zoomed in, cross-sectional view of the vacuum chuck **200** taken along **2**E-**2**E as shown in FIG. **2**A. The line **2**E-**2**E is along a respective one of the plurality of channels **214**. The dotted line is representative of one of the plurality of channels **214** that is between a pair of adjacent ones of the plurality of protrusions **212**. As shown in FIG. **2**E, each one of the plurality of channels **214** may have the height H**1**.

FIG. **3**A is a top plan view of a robot (e.g., a transfer robot) **300** that includes a central hub **303** and a plurality of arms **302** that extend from the central hub **303**. While not readily visible, each one of the plurality of arms **302** is coupled to a corresponding one of a plurality of the vacuum chucks **200**, in accordance with some embodiments. For example, each one of the plurality of vacuum chucks **200** is at a corresponding end of one of the plurality of arms **302** opposite to the ends of the plurality of arms **302** that are coupled to the central hub **303**. Each one of the plurality of vacuum chucks **200** may be mounted to each one of the plurality of arms **302** by the one or more clamps **400** (see FIG. **5** of the present disclosure).

As shown in FIG. **3**A, a plurality of the workpieces **104** are on the plurality of vacuum chucks **200**. For example, each one of the plurality of the workpieces **104** is on a corresponding one of the plurality of vacuum chucks **200** such that there is a one to one relationship as shown in FIG. **3**. Each one of the plurality of workpieces **104** is within corresponding ones of the plurality of guide portions **218***a*, **218***b*, **218***c*, **218***d*, respectively, of the vacuum chucks **200**. The guide portions **218***a*, **218***b*, **218***c*, **218***d* are configured to guide the workpieces **104** onto the vacuum chucks **200** such that the workpieces **104** are properly aligned with a corresponding one of the vacuum chucks **200**, and the guide portions **218***a*, **218***b*, **218***c*, **218***d* are configured to act as barriers to reduce the likelihood of the workpieces **104** becoming misaligned due to shifting when present on the vacuum chucks **200** or from falling off the vacuum chucks **200**.

The vacuum source **116** is fluidically coupled to fluid pathways **306** that pass through or extend along the robot **300**. In some embodiments, the vacuum source **116** is integrated within the robot **300**. The fluid pathways **306** may be referred to as vacuum fluid pathways, vacuum pathways, or some other similar or like reference of the fluid pathways **306**, which are configured to be utilized to generate the vacuum **118**. These fluid pathways **306** are in fluid communication with the plurality of vacuum lines **114** of the plurality of the vacuum chucks **200** to generate the vacuums **118** to hold the plurality of the workpieces **104** on each corresponding one of the plurality of the vacuum chucks **200**, respectively.

FIG. **3**B is a top plan view of the robot **300**. However, unlike FIG. **3**A in which each one of the vacuum chucks **200** is holding a corresponding one of the plurality workpieces, one of the vacuum chucks **200** is holding one of the workpieces **104** and the two other vacuum chucks **200** are each holding a dummy workpiece **308**. The dummy workpieces **308** may not be exposed to processing as the dummy workpieces **308** may be placed on ones of the vacuum chucks **200** to maintain the vacuum **118** generated by the vacuum source **116**. The dummy workpieces **308** may be flatter than the workpieces **104** (e.g., production wafer) so that the vacuum **118** generated by the vacuum source **116** is stronger.

In view of FIGS. **3**A and **3**B, the plurality of vacuum lines **114** of each of the vacuum chucks **200** may be in direct fluid communication with each other through the fluid pathways **306** such that when the vacuum source **116** is activated the vacuums **118** are generated at all three of the vacuum chucks **200** mounted to the robot **300** simultaneously. When all three of the vacuums **118** at each of the vacuum chucks **200** are generated simultaneously by activating the vacuum source **116**, the vacuums **118** at each one of the vacuum chucks **200** may be less strong when each of the workpieces **104** is on the vacuum chucks **200** as shown in FIG. **3**A as compared to when the two dummy workpieces **308**, which are flatter than the workpieces **104**, and the one workpiece **104** is present on the vacuum chucks **200** as shown in FIG. **3**B. For example, as the dummy workpieces **308** are flatter than the workpieces **104**, this results in the vacuums **118** generated through and at the vacuum chucks **200** simultaneously being stronger as the greater flatness of the dummy workpieces **308** results in a greater vacuum or seal effect between the backside surfaces of the dummy workpieces **308** and the workpiece surface **200**. Alternatively, when the three workpieces **104** are present on the three vacuum chucks **200**, the vacuums **118** simultaneously being generated are weaker than the vacuums **118** generated relative to when the two dummy workpieces **308** and the one workpiece **104** is present on the vacuum chucks **200**, respectively.

As discussed earlier, utilizing the vacuum chucks **200** instead of the vacuum chucks **100** results in less warpage occurring in the workpieces **104**. This reduced warpage causes the vacuums **118** generated at the vacuum chucks **200** being greater than those generated when utilizing the vacuum chucks **100**. When utilizing the vacuum chucks **100**, the residual moisture or fluid **122** cannot effectively escape or evaporate resulting in the workpieces **104** warping by a larger amount (see FIG. **1**B) as compared to when utilizing the vacuum chucks **200** (see FIG. **2**B). This is because the vacuum chucks **200** include the moisture gate portion **202** that allows for the residual moisture or fluid **122** to effectively escape or evaporate. Utilizing the vacuum chucks **200** each with the moisture gate portion **202** results in the spaces **222** being smaller than the spaces **124** when utilizing the vacuum chucks **100**. As the spaces **222** are smaller, the vacuum or seal effect between the backside surfaces of the workpieces **104** and the workpiece surfaces **102** of the vacuum chucks **100** is not as strong as the vacuum or seal effect between the backside surface of the workpieces **104** and the workpiece surfaces **102** of the vacuum chucks **200**. In other words, the vacuums **118** generated through and at the workpiece surfaces **102** of the vacuum chucks **200** when the workpieces **104** are present is greater than when the workpieces **104** are on the vacuum chucks **100** as there is less warpage in the workpieces **104** when present on the vacuum chuck **200**. In view of the above discussion, utilizing the vacuum chucks **200** instead of the vacuum chucks **100** increases the strength of the vacuum **118** as the moisture gate portions **202** of the vacuum chucks **200** allow the residual moisture or fluid **122** to effectively escape or evaporate reducing the amount of warpage and increasing the strength of the vacuums **118**, respectively.

When the workpieces **104** are present on each one of the vacuum chucks **200** as shown in FIGS. **3**A, the vacuums **118** generated may have a strength equal to or less than 26-kilopascal (kPa). When there are two workpieces **104** and one dummy workpiece **308** on the vacuum chucks **200**, the

vacuums **118** generated may have a strength equal to or less than 47-kPa. When there is one workpiece **104** and two dummy wafers **308** on the vacuum chucks **200**, the vacuums **118** generated may have a strength equal to or less than 85-kPa. When there are three dummy wafers **308** on the vacuum chucks **200**, the vacuums **118** generated may have a strength equal to or less than 86-kPa.

When the vacuum chucks **100** are utilized instead of the vacuum chucks **200** in FIGS. **3**A and **3**B, the vacuums **118** generated when there are three workpieces **104** on the vacuum chucks **100** may have a strength equal to or less than 13-kPa. When the vacuum chucks **100** are utilized instead of the vacuum chucks **200** in FIGS. **3**A and **3**B, the vacuums **118** generated when there are two workpieces **104** and one dummy workpiece **308** on the vacuum chucks **100** may have a strength equal to or less than 25-kPA. When the vacuum chucks **100** are utilized instead of the vacuum chucks **200** in FIGS. **3**A and **3**B, the vacuums **118** generated when there is one workpiece **104** and two dummy workpieces **308** on the vacuum chucks **100** may have a strength equal to or less than 46-kPA. When the vacuum chucks **100** are utilized instead of the vacuum chucks **200** in FIGS. **3**A and **3**B, the vacuums **118** generated when there are three dummy workpiece **308** on the vacuum chucks **100** may have a strength equal to or less than 85-kPA.

In view of the above strengths of the vacuums **118** generated when utilizing the vacuum chucks **200** and the vacuum chucks **100**, the vacuums **118** generated when utilizing the vacuum chucks **200** are greater than those generated utilizing the vacuum chucks **100**. However, the vacuums **118** generated when utilizing the vacuum chucks **200** and the vacuum chucks **100** are almost the same when three dummy workpieces **308** are present on each one of the vacuum chucks **100**, **200**, respectively. In other words, the vacuums **118** generated utilizing the vacuum chucks **200** are generally stronger than those generated utilizing the vacuum chucks **100** resulting in a stronger vacuum or seal effect on the workpieces **104** and/or the dummy workpieces **308** reducing the likelihood of shifting of the workpieces **104** and/or the dummy workpieces **308** when utilizing the vacuum chucks **200** instead of the vacuum chucks **100**.

In some alternative embodiments, there may be more than one of the vacuum source **116** such that there are a plurality of vacuum sources **116**. Each one of the plurality of vacuum sources **116** is each in fluid communication with a corresponding one of the vacuum chucks **200**. In this alternative embodiment, the vacuums **118** at each one of the vacuum chucks **200** may be independently generated instead of being generated simultaneously all together. In other word, the vacuums **118** at each one of the vacuum chucks **200** may be independently controlled from the others.

FIG. **4** is a side view of the vacuum chuck **200** as shown in FIGS. **2**A and **2**B held within the one or more clamps **400**. The clamps **400** may be one type of mounting structure that may be utilized to mount the vacuum chuck **200** to the robot as shown in FIGS. **3**A and **3**B, in accordance with some embodiments. The one or more clamps **400** may be coupled to an end of one of the plurality of arms **302** of the robot **300**. The one or more clamps **400** clamp onto the pair of opposing mounting structures **112**, respectively, such that the vacuum chuck **200** is mounted to the end of the respective arm of the plurality of arms **302** of the robot **300**. While there are two of the pair of mounting structures **112** and there are two clamps **400** as shown in FIG. **4**, it will be readily appreciated that a number of the mounting structures **112** and a number of the one or more clamps **400** may be increased or decreased (e.g., 1, 3, 4, 5, etc.) such that a different number of the mounting structures **112** and a different number of the one or more clamps **400** is present in alternative embodiments.

FIG. **5** is a flowchart **500** of a method of use of the vacuum chuck **200** as shown in FIGS. **2**A and **2**E when utilized on the robot **300** as shown in FIGS. **3**A and **3**B. Each respective step of the flowchart **500** will be discussed in detail as follows.

In a first step **502**, one or more of the workpieces **104** and/or the dummy workpieces **308** are positioned on the vacuum chucks **200** of the robot **300**. For example, the workpieces **104** and/or dummy workpieces **308** may be positioned on the vacuum chucks **200** by another robot or by a user in a position similar to that as shown in FIG. **2**B. The workpieces **104** and/or dummy workpieces **308** are positioned within the respective guide portions **218***a*, **218***b*, **218***c*, **218***d* such that the workpieces **104** and/or the dummy workpieces **308** are properly and correctly aligned and present on the respective workpiece surfaces **102** of the vacuum chucks **200**, respectively. This proper alignment may facilitate a strong vacuum or seal effect when generating the vacuums **118**. The workpieces **104** may be present on the end surfaces **220** of the plurality of protrusions **212** of the vacuum chucks **200**, respectively.

After the first step **502**, a second step **504** is carried out in which the vacuum source **116** is activated such that air is removed from within the spaces **222** through the plurality of vacuum lines **114** and the fluid pathways **306**. Removing the air from within the spaces **222** generates the vacuum **118** resulting in a suction force holding the workpieces **104** and/or the dummy workpieces **308** on the vacuum chucks **200**. If the residual moisture or fluid **122** is present on the workpieces **104**, the residual moisture or fluid **122** is capable of effectively escaping or evaporating such that the residual moisture or fluid **122** is not trapped within the spaces **222** reducing the warpage of the workpieces **104**. For example, the residual moisture or fluid **122** may be present as the workpieces **104** may have undergone processing or may have been exposed to a small amount of moisture when being shipped to a FAB for refinement and processing.

After second step **504**, a third step **506** is carried out in which the robot **300** may articulate or actuate the plurality of arms **302** to transfer or transport the workpieces **104** and/or dummy wafers **308** between various locations within the FAB. For example, the workpieces **104** may be transferred or transported to a workpiece processing tool and then the workpieces **104** may be inserted into the workpiece processing tool for refinement and processing. The workpiece processing tool may be an etching or lithography tool, a patterning tool, an EUV lithography tool, or some other suitable type of workpiece processing tool configured to refine or process the workpieces **104**. The plurality of arms **302** may be configured to extend outward and retract inward, and the central hub **303** may be configured to rotate allowing for the robot **300** to transport or transfer the workpieces **104** to and from workpiece processing tools and various locations within the FAB.

After the third step **506**, in a fourth step **508** the workpiece **104** is inserted into the workpiece processing tool for processing and refining. If the workpiece processing tool utilizes a fluid or liquid to process or refine the workpiece **104**, the residual moisture or fluid **122** may build up on the workpiece **104** within the workpiece processing tool as the workpiece processing tool processes or refines the workpiece **104**.

After the fourth step **508**, in a fifth step **510** the workpiece **104** is removed from the workpiece processing tool after

being processed and/or refined. For example, if the workpiece **104** was processed or refined when present on the vacuum chuck **200**, the workpiece **104** is already present on the vacuum chuck **200**. Alternatively, if the workpiece **104** was previously removed from the vacuum chuck to be processed or refined by the workpiece processing tool, the workpiece **104** is repositioned onto one of the vacuum chucks **200**. The residual moisture or fluid **122** that is left over from being processed or refined by the workpiece processing tool may effectively escape or evaporate through the moisture gate portion **202** maintaining a miniscule amount of warpage in the workpiece **104** or resulting in no warpage of the workpiece **104** when present on the vacuum chuck **200**.

If the workpiece **104** was previously removed from the vacuum chuck **200** to be processed and refined by the workpiece processing tool, one of the dummy workpieces **308** may be positioned on the vacuum chuck **200**. After the workpiece **104** is refined or processed by the workpiece processing tool, the dummy workpiece **308** present on the corresponding vacuum chuck **200** may be removed and then the processed or refined workpiece **104** may be positioned back on the vacuum chuck **200**.

In view of the above discussion, any combination of the workpieces **104** and/or the dummy workpieces **308** may be positioned on the vacuum chucks **200** to carry out the method as shown in the flowchart **500**. Various respective steps of the method as shown in the flowchart **500** may be completed in different orders depending on a process flow within the FAB to manufacture electronic or semiconductor devices (e.g., dice, packages, etc.). Various respective steps of the method as shown in the flowchart **500** may be completed in succession over and over again depending on a process flow within the FAB to manufacture electronic devices or semiconductor devices (e.g., dice, packages, etc.).

During the method as shown in the flowchart **500**, the guide portions **218***a*, **218***b*, **218***c*, **218***d* act as barriers that prevent the workpieces **104** and/or the dummy workpieces **308** from shifting on the vacuum chucks **200** when being transferred or transported, and act as barriers to prevent the workpieces **104** and/or the dummy workpiece **308** from falling off the vacuum chucks **200**. During the method as shown in the flowchart **500**, the workpiece **104** may be on the carrier **120** such that the carrier **120** comes into contact with the end surfaces **220** of the plurality of protrusions **212** of the vacuum chuck **200**.

In view of the discussion herein, utilizing the vacuum chuck **200** instead of the vacuum chuck **100** reduces an amount of warpage in the workpiece **104** and the carrier **120** as the moisture gate portion **202** of the vacuum chuck **200** effectively allows for the residual moisture or fluid **122** to escape or evaporate unlike the vacuum chuck **100**. This reduced warpage reduces a likelihood of shifting or misalignment of the workpiece **104** on the vacuum chuck **200** relative to when utilizing the vacuum chuck **100**. This reduced warpage of the workpieces **104** when utilizing the vacuum chuck **200** increases the strength of the vacuum **118** relative to when utilizing the vacuum chuck **100**. The presence of the guide portions **218***a*, **218***b*, **218***c*, **218***d* of the vacuum chuck reduces the likelihood of shifting of the workpieces **104** and/or the dummy workpieces **308** when present on the vacuum chuck **200** relative to when present on the vacuum chuck **100**, which does not include the guide portions **218***a*, **218***b*, **218***c*, **218***d*. The presence of the guide portions **218***a*, **218***b*, **218***c*, **218***d* of the vacuum chuck reduces the likelihood of the workpieces **104** and/or the dummy workpieces **308** falling when present on the vacuum chuck **200** relative to when present on the vacuum chuck **100**, which does not include the guide portions **218***a*, **218***b*, **218***c*, **218***d*. In view of this discussion, the reduction in warpage of the workpieces **104** when utilizing the vacuum chuck **200**, increases a yield number of electronic or semiconductor devices (e.g., dice, packages, etc.) that are manufactured within tolerance and are capable of being sold to customers, which reduces waste expenses and increases profitability.

In view of the discussion within the present disclosure, embodiments of the vacuum chuck **200** of the present disclosure may be utilized in the manufacture of integrated fan out (InFO) semiconductor packages, an InFO_B semiconductor package, chip-on-wafer-on-substrate semiconductor packages (CoWoS), large-scale integration (LSI) semiconductor packages, or may be utilized in the formation of any number of suitable types of semiconductor packages. More specifically, the vacuum chuck **200** may be utilized during manufacturing these various types of semiconductor packages by maintaining a position of various components on the vacuum chuck **200** (e.g., a silicon wafer) utilizing the vacuum passing through the vacuum chuck while also reducing the likelihood, or in some instance, preventing moisture damage to the various components present on the vacuum chuck **200**. For example, the vacuum chuck **200** may be at an end of a respective arm of a transfer robot present within the FAB to transfer pieces between various semiconductor manufacturing and processing tools within the FAB to manufacture the various types of semiconductor packages.

A vacuum chuck may be summarized as including a central vacuum portion including a workpiece surface; a peripheral edge spaced outward from the central vacuum portion; a peripheral drainage portion present at the peripheral edge, the peripheral drainage portion including a drainage channel; and a vacuum line extending into the central vacuum portion, the vacuum line including a vacuum opening at the workpiece surface of the central vacuum portion.

A system may be summarized as including a workpiece transfer device including a clamp; and a vacuum chuck mounted to the workpiece transfer device by the clamp, the vacuum chuck including: a central vacuum portion including a workpiece surface; a peripheral edge spaced outward from the central vacuum portion; a peripheral drainage portion present at the peripheral edge, the peripheral drainage portion including a drainage channel; and a vacuum line extending into the central vacuum portion, the vacuum line including a vacuum opening at the workpiece surface of the central vacuum portion.

A method may be summarized as including positioning a workpiece on a vacuum chuck to overlap a plurality of extensions of a peripheral drainage portion of a vacuum chuck adjacent to a peripheral edge of the vacuum chuck; generating a vacuum through a plurality of vacuum openings at a workpiece surface of the vacuum chuck through a plurality of vacuum lines in the vacuum chuck; and utilizing the vacuum to hold the workpiece on the vacuum chuck.

The foregoing outlines features of several embodiments so that those skilled in the art may better understand the aspects of the present disclosure. Those skilled in the art should appreciate that they may readily use the present disclosure as a basis for designing or modifying other processes and structures for carrying out the same purposes and/or achieving the same advantages of the embodiments introduced herein. Those skilled in the art should also realize that such equivalent constructions do not depart from the spirit and scope of the present disclosure, and that they may

make various changes, substitutions, and alterations herein without departing from the spirit and scope of the present disclosure.

What is claimed is:

1. A vacuum chuck, comprising:

a central vacuum portion including a workpiece surface;

a peripheral edge spaced outward from the central vacuum portion, the peripheral edge surrounding the central vacuum portion;

a peripheral drainage portion present between the peripheral edge and the central vacuum portion, the peripheral drainage portion including a drainage channel and a plurality of extensions, and the plurality of extensions extend from the peripheral edge to the drainage channel; and

a vacuum line extending into the central vacuum portion, the vacuum line including a vacuum opening at the workpiece surface of the central vacuum portion.

2. The vacuum chuck of claim **1**, wherein:

the drainage channel is between the central vacuum portion and the plurality of extensions, and the drainage channel surrounds the central vacuum portion.

3. The vacuum chuck of claim **2**, wherein the central vacuum portion includes a center, and the drainage channel is closer to the center of the central vacuum portion than the plurality of extensions.

4. The vacuum chuck of claim **3**, wherein each one of the plurality of extensions is spaced apart from an adjacent one of the plurality of extensions by the drainage channel.

5. The vacuum chuck of claim **3**, wherein each one of the plurality of extensions further includes a sidewall facing towards the central vacuum portion and an end surface transverse to the sidewall.

6. The vacuum chuck of claim **2**, wherein:

the central vacuum portion further includes a sidewall facing towards the extension, the sidewall of the central vacuum portion is transverse to the workpiece surface;

the extension further includes a sidewall facing towards the sidewall of the central vacuum portion; and

the drainage channel extends from the sidewall of the central vacuum portion to the sidewall of the extension.

7. The vacuum chuck of claim **2**, wherein each respective extension of the plurality of extensions further includes an end surface coplanar with the workpiece surface of the central vacuum portion.

8. The vacuum chuck of claim **1**, further comprising:

a mounting portion extending from the peripheral drainage portion; and

a workpiece guide structure extending from the mounting portion.

9. The vacuum chuck of claim **1**, wherein the drainage channel has an L-shape.

10. The vacuum chuck of claim **1**, wherein the drainage channel includes a first portion that surrounds the central vacuum portion and a plurality of second portions that extend from the first portion to the drainage channel to the peripheral edge.

11. The vacuum chuck of claim **10**, wherein the peripheral drainage portion further includes a plurality of extensions, each one of the plurality of extensions is spaced apart from an adjacent one of the plurality of extensions by the plurality of second portions of the drainage channel.

12. A system, comprising:

a workpiece transfer device including a clamp; and

a vacuum chuck mounted to the workpiece transfer device by the clamp, the vacuum chuck including:

a central vacuum portion including a workpiece surface;

a peripheral edge spaced outward from the central vacuum portion, the peripheral edge surrounding the central vacuum portion;

a peripheral drainage portion present between the peripheral edge and the central vacuum portion, the peripheral drainage portion including a drainage channel and a plurality of extensions, and the plurality of extensions extend from the peripheral edge to the drainage channel; and

a vacuum line extending into the central vacuum portion, the vacuum line including a vacuum opening at the workpiece surface of the central vacuum portion.

13. The system of claim **12**, wherein:

the drainage channel is between the central vacuum portion and the plurality of extensions, and the drainage channel surrounds the central vacuum portion.

14. The system of claim **13**, wherein the central vacuum portion includes a center, and the drainage channel is closer to the center of the central vacuum portion than the plurality of extensions.

15. The system of claim **14**, wherein each one of the plurality of extensions is spaced apart from an adjacent one of the plurality of extensions by the drainage channel.

16. The system of claim **15**, wherein the drainage channel of the vacuum chuck further includes:

a first portion that surrounds the central vacuum portion; and

a plurality of second portions that extend from the first portion to the peripheral edge, and the plurality of second portions are positioned between ones of the plurality of extensions and space adjacent ones of the plurality of extension from each other.

17. The system of claim **12**, wherein:

the vacuum chuck further includes:

a mounting portion extending outward from the peripheral edge; and

a workpiece guide structure spaced outward from the peripheral edge and extending from the mounting portion;

the clamp mechanically engages with the mounting portion to mount the vacuum chuck to the workpiece transfer device.

18. A vacuum chuck, comprising:

a central vacuum portion including a workpiece surface;

a peripheral edge spaced outward from the central vacuum portion, the peripheral edge surrounding the central vacuum portion;

a peripheral drainage portion present between the peripheral edge and the central vacuum portion, the peripheral drainage portion including a main drainage channel, a plurality of extensions, and a plurality of sub-drainage channels that extend outward from the main drainage channel to the peripheral edge, and each respective sub-drainage channel of the plurality of sub-drainage channels is at least partially delimited by respective pair of extensions of the plurality of extensions; and

a vacuum line extending into the central vacuum portion, the vacuum line including a vacuum opening at the workpiece surface of the central vacuum portion;

a first mounting portion extending outward from the peripheral edge, the first mounting portion including a first guide structure configured to, in operation, direct placement of a workpiece onto the workpiece surface of the central vacuum portion; and

a second mounting portion extending outward from the peripheral edge, the second mounting portion including a second guide structure configured to, in operation, guide the workpiece onto the workpiece surface of the central vacuum portion.

19. The vacuum chuck of claim **18**, wherein the first mounting portion is opposite to the second mounting portion about the central vacuum portion.

20. The vacuum chuck of claim **18**, wherein

a first width of each respective extension of the plurality of extensions is equal to a second width of each respective sub-drainage channel of the plurality of sub-drainage channels.

* * * * *