US012405162B2

(12) **United States Patent**
Tabata et al.

(10) **Patent No.: US 12,405,162 B2**
(45) **Date of Patent: Sep. 2, 2025**

(54) **SPECTROSCOPIC UNIT AND SPECTROSCOPIC MODULE**

(71) Applicant: **HAMAMATSU PHOTONICS K.K.**, Hamamatsu (JP)

(72) Inventors: **Kei Tabata**, Hamamatsu (JP); **Yumi Kuramoto**, Hamamatsu (JP)

(73) Assignee: **HAMAMATSU PHOTONICS K.K.**, Hamamatsu (JP)

(*) Notice: Subject to any disclaimer, the term of this patent is extended or adjusted under 35 U.S.C. 154(b) by 0 days.

(21) Appl. No.: **17/631,941**

(22) PCT Filed: **Sep. 24, 2020**

(86) PCT No.: **PCT/JP2020/036020**
§ 371 (c)(1),
(2) Date: **Feb. 1, 2022**

(87) PCT Pub. No.: **WO2021/065668**
PCT Pub. Date: **Apr. 8, 2021**

(65) **Prior Publication Data**

US 2024/0035888 A1 Feb. 1, 2024

(30) **Foreign Application Priority Data**

Oct. 4, 2019 (JP) 2019-183873

(51) **Int. Cl.**
G01J 3/26 (2006.01)
G01J 3/02 (2006.01)
G01J 3/12 (2006.01)

(52) **U.S. Cl.**
CPC ***G01J 3/26*** (2013.01); ***G01J 3/0262*** (2013.01); ***G01J 3/0291*** (2013.01); *G01J 2003/1213* (2013.01)

(58) **Field of Classification Search**
CPC G01J 3/26; G01J 3/0262; G01J 3/0291; G01J 2003/1213
See application file for complete search history.

(56) **References Cited**

U.S. PATENT DOCUMENTS

3,389,256 A 6/1968 Astheimer
9,587,978 B2 * 3/2017 Okudo G01J 1/0411
(Continued)

FOREIGN PATENT DOCUMENTS

CN 103969726 A 8/2014
CN 106017670 A 10/2016
(Continued)

OTHER PUBLICATIONS

English-language translation of International Preliminary Report on Patentability (IPRP) dated Apr. 14, 2022 that issued in WO Patent Application No. PCT/JP2020/036020.
(Continued)

Primary Examiner — Uzma Alam
Assistant Examiner — Mohamed Doumbia
(74) *Attorney, Agent, or Firm* — Faegre Drinker Biddle & Reath LLP

(57) **ABSTRACT**

A spectroscopic unit includes a housing having a wall part formed with an opening, a first aperture part formed with a first aperture, and a second aperture part formed with a second aperture, in which a length of the second aperture in the facing direction is larger than a length of the first aperture in the facing direction, an outer edge of the first aperture is positioned inside each of an outer edge of the opening and an outer edge of the second aperture, and the first aperture includes at least one of a first tapered portion reaching a first surface of the first aperture part and extending toward the
(Continued)

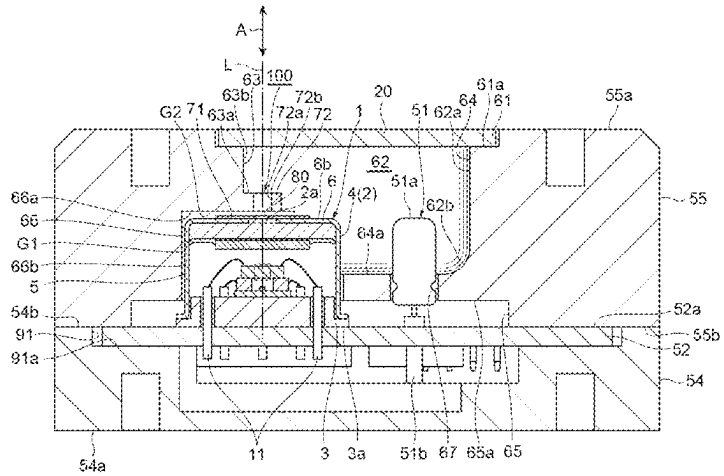

first surface, and a second tapered portion reaching a second surface of the first aperture part and extending toward the second surface.

17 Claims, 10 Drawing Sheets

(56) **References Cited**

U.S. PATENT DOCUMENTS

2002/0101574	A1	8/2002	Tsuji	
2004/0227928	A1	11/2004	Bonne et al.	
2016/0182765	A1	6/2016	Hirokubo	
2016/0282183	A1*	9/2016	Kanai	G01J 3/524
2018/0292267	A1*	10/2018	Hirose	G01J 3/0213

FOREIGN PATENT DOCUMENTS

CN	108344506	A		7/2018
CN	112955721	A		6/2021
JP	S61-077728	A		4/1986
JP	S62-047932	U		3/1987
JP	H8-189863	A		7/1996
JP	H11-160156	A		6/1999
JP	3063513	U		11/1999
JP	2001-517120	A		10/2001
JP	2002-287200	A		10/2002
JP	2003-501113	A		1/2003
JP	2010151639	A	*	7/2010
JP	2011-220770	A		11/2011
JP	2013-508677	A		3/2013
JP	2014-115244	A		6/2014
JP	2014-132304	A		7/2014
JP	2014-145643	A		8/2014
JP	2015-049276	A		3/2015
JP	2016-176910	A		10/2016
JP	2017-122688	A		7/2017
WO	WO-98/044322	A1		10/1998
WO	WO-99/039375	A1		8/1999
WO	WO-00/016046	A2		3/2000
WO	WO-2011/045722	A2		4/2011
WO	WO-2015/107655	A1		7/2015
WO	WO 2017/054098	A1		4/2017
WO	WO-2017/057372	A1		4/2017
WO	WO-2020/090181	A1		5/2020

OTHER PUBLICATIONS

Fischer. R.E. et al., "Optical System Design, Second edition", The McGraw-Hill Companies Inc., 2008, p. 703-p. 737.

* cited by examiner

Fig.1

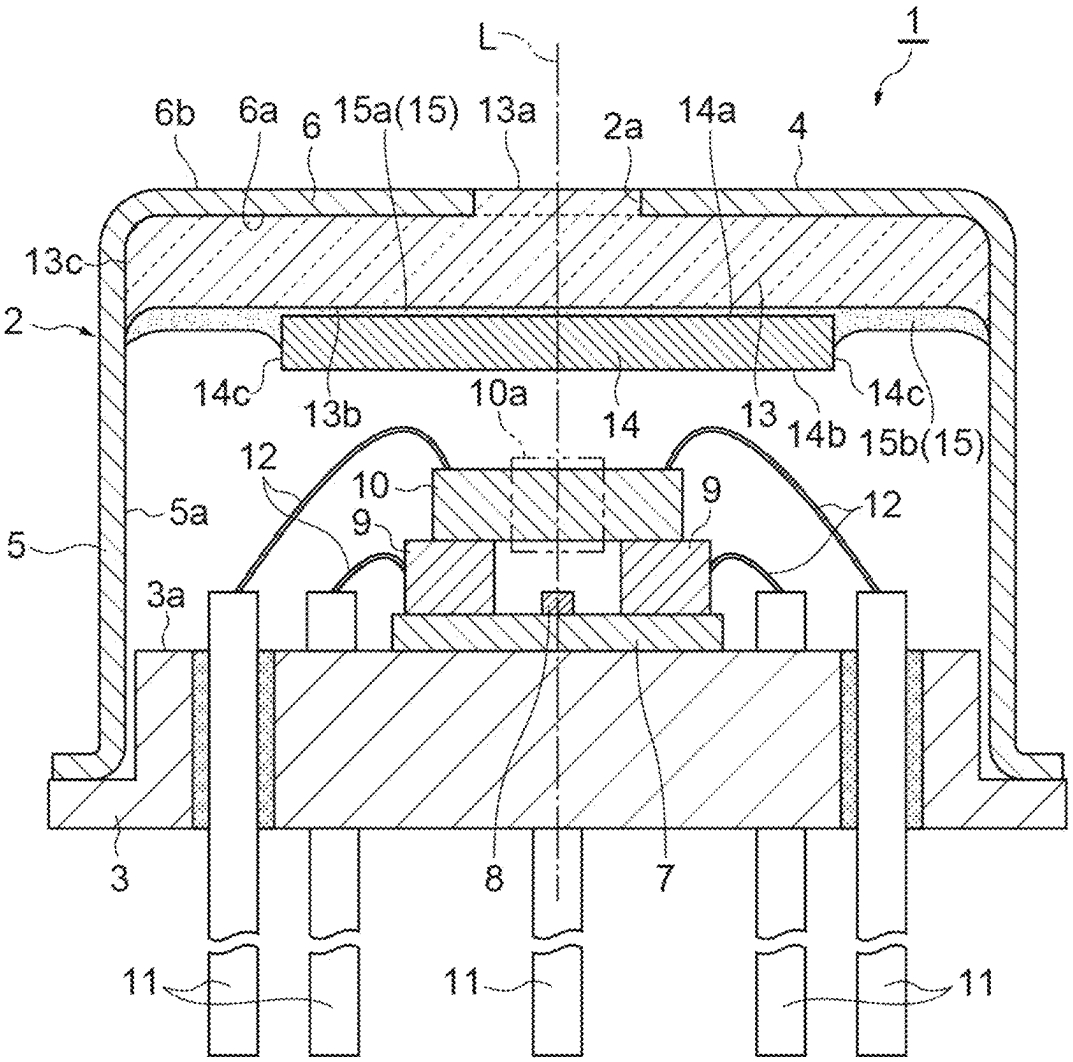
L
1
6b
6a
6
15a(15)
13a
2a
14a
4
13c
2
14c
13b
10a
14
13
14b
15b(15)
14c
12
10
9
9
12
5a
5
3a
3
8
7
11
11
11

Fig.2

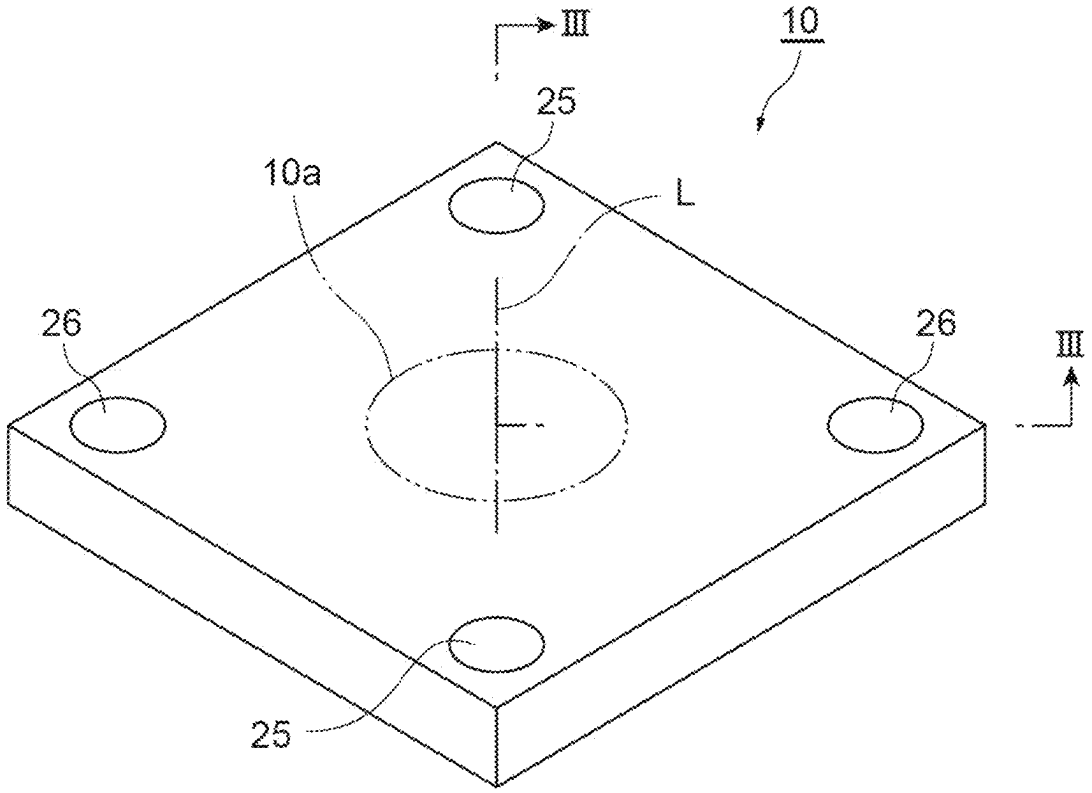

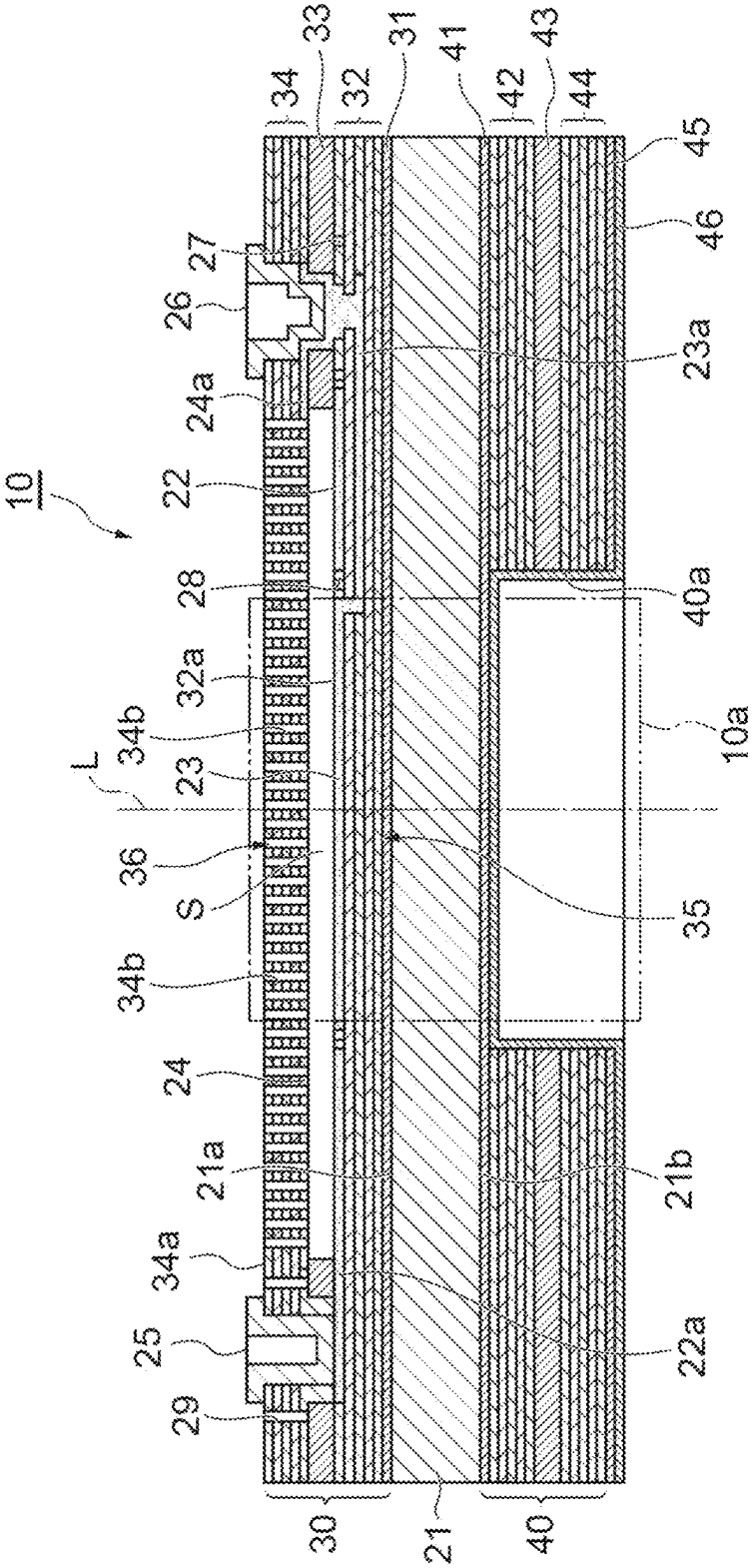
10
34
33
32
31
41
42
43
44
45
46
27
26
24a
22
28
32a
34b
L
23
36
S
34b
24
21a
34a
25
29
30
21
40
23a
40a
10a
35
21b
22a

Fig.3

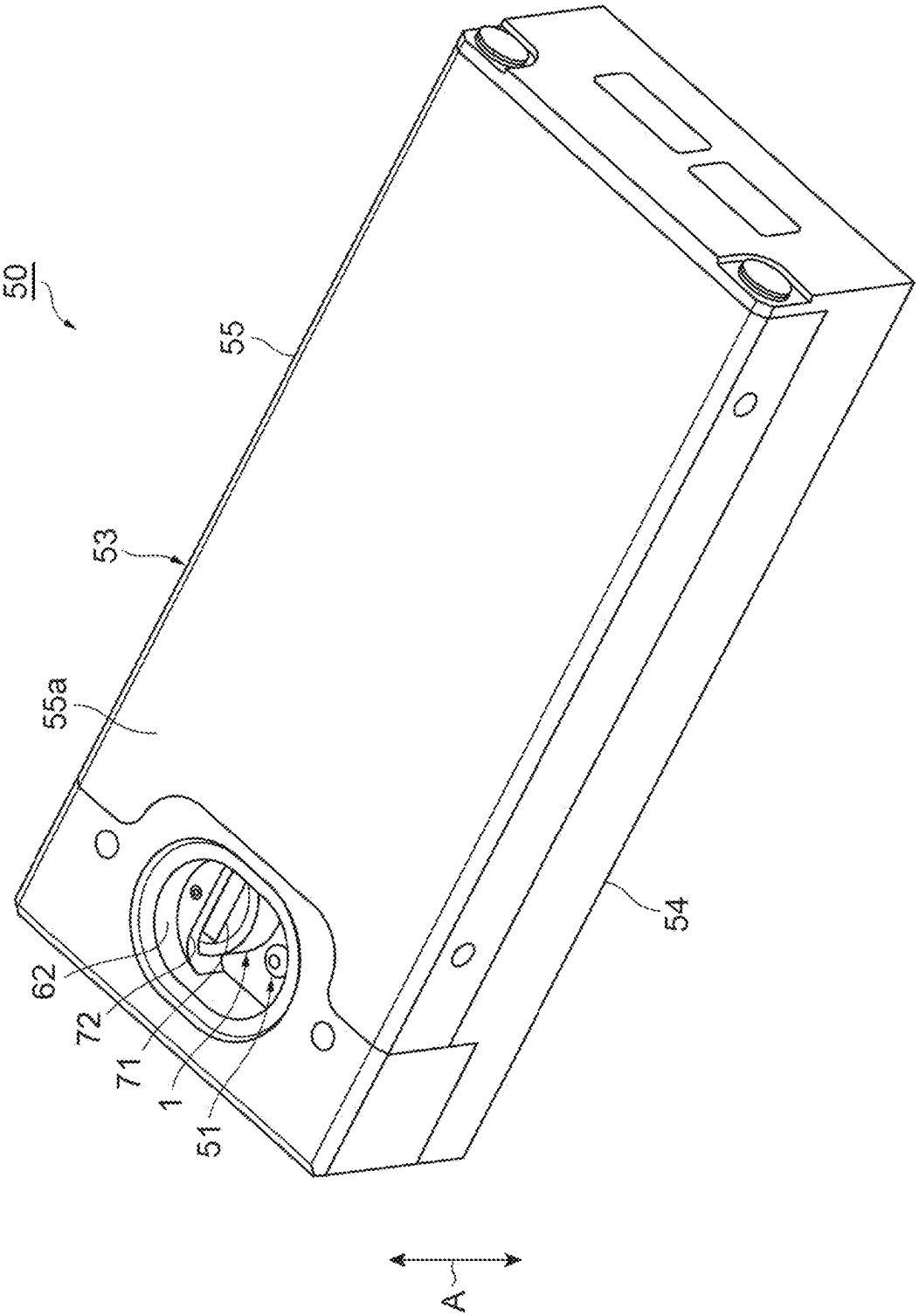

Fig.4

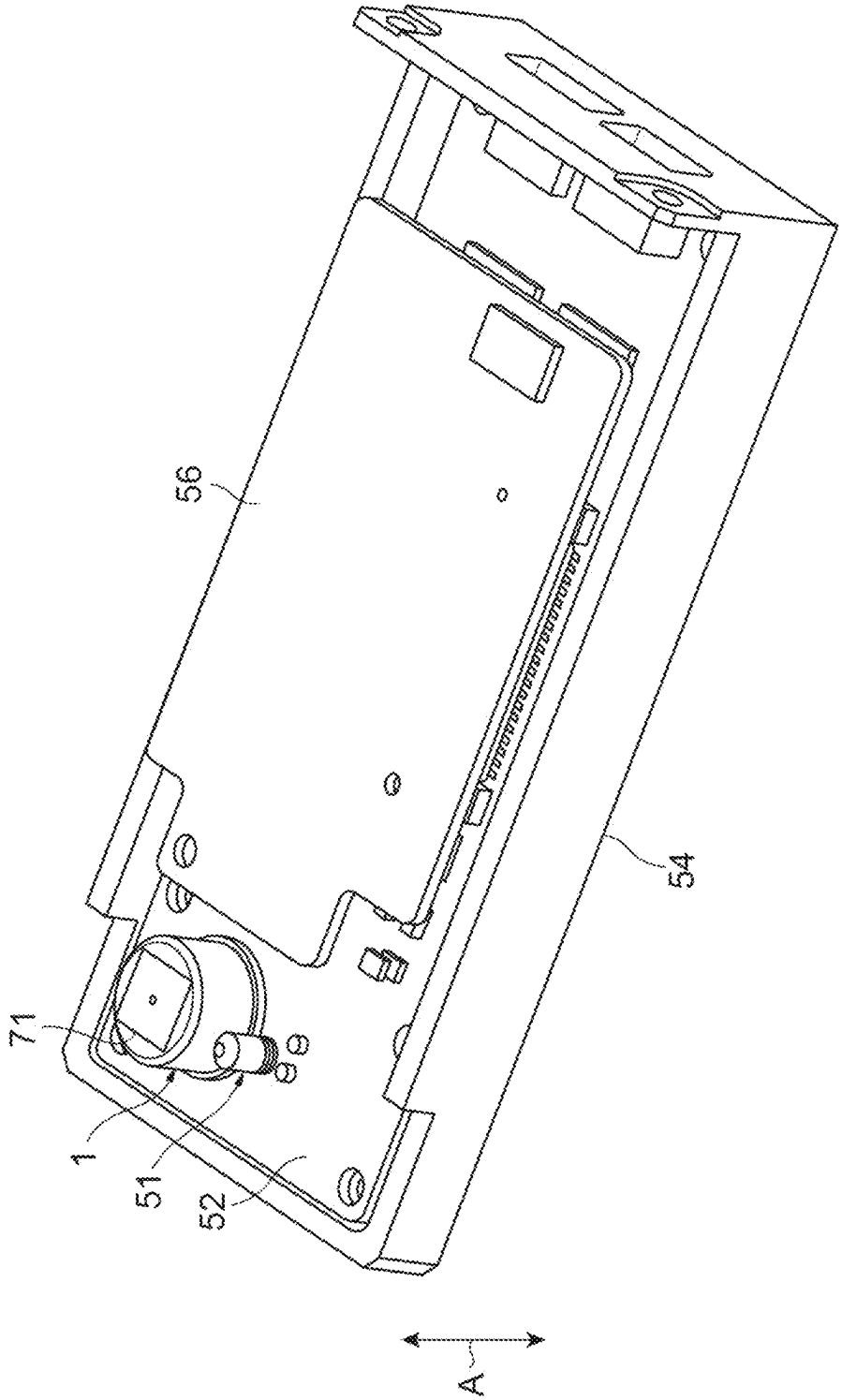

Fig.5

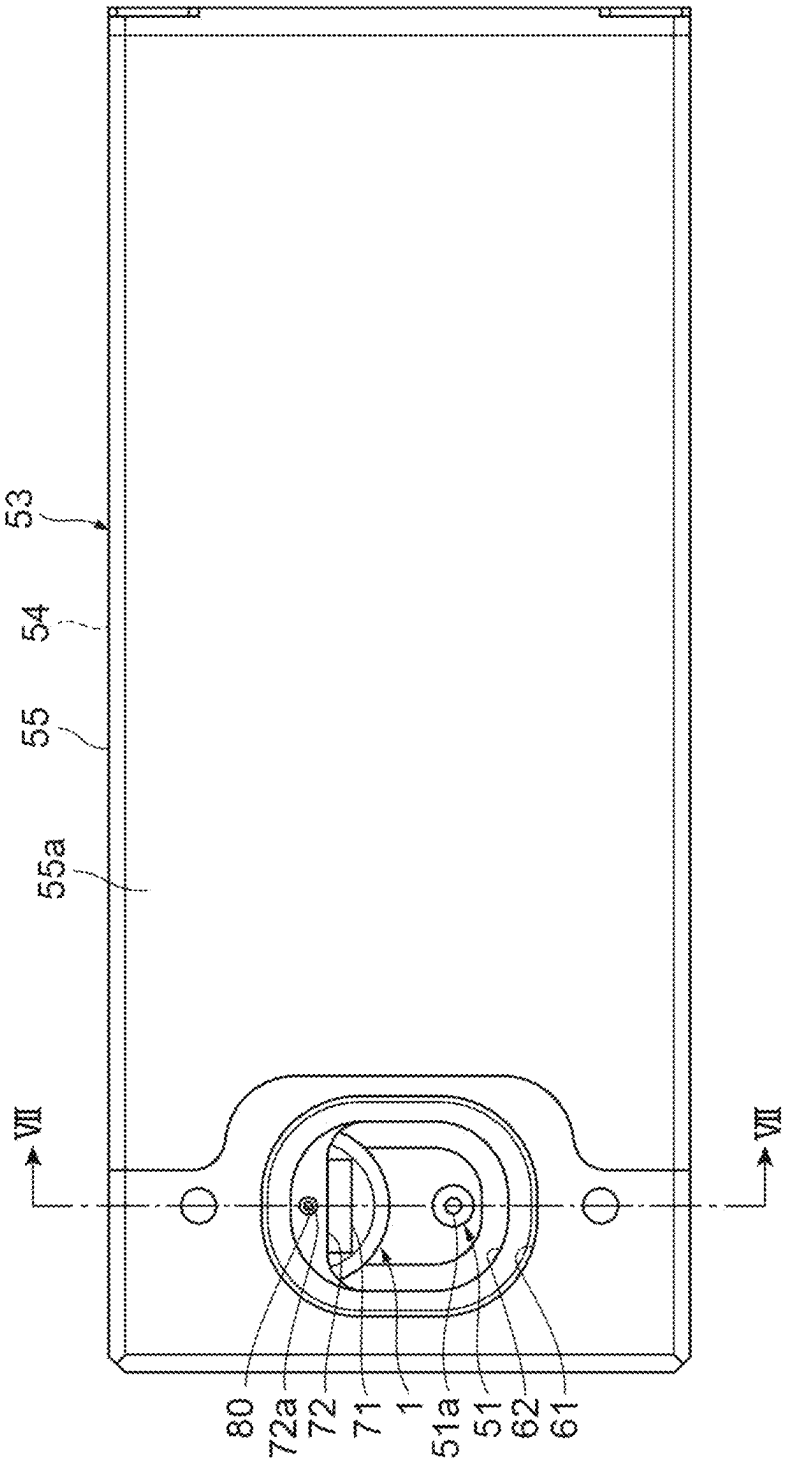

Fig.6

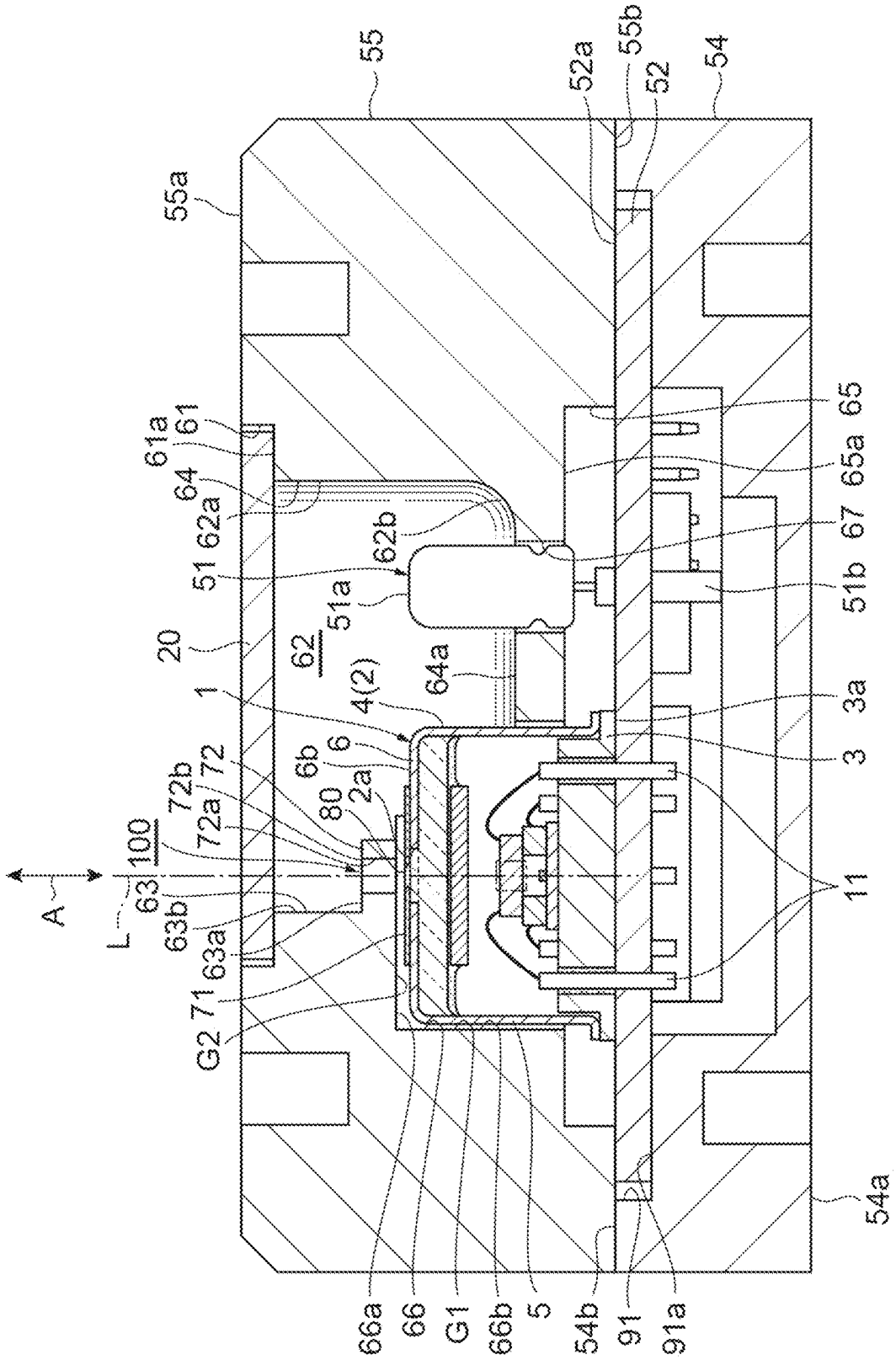
55
55a
52a
55b
52
54
61a
61
64
62a
51
62b
51a
62
20
1
4(2)
64a
6b
6
72
72b
72a
80
2a
100
63
63b
63a
A
L
G2
71
66a
66
G1
66b
5
54b
91
91a
54a
65
65a
67
51b
3a
3
11

Fig.7

Fig.8

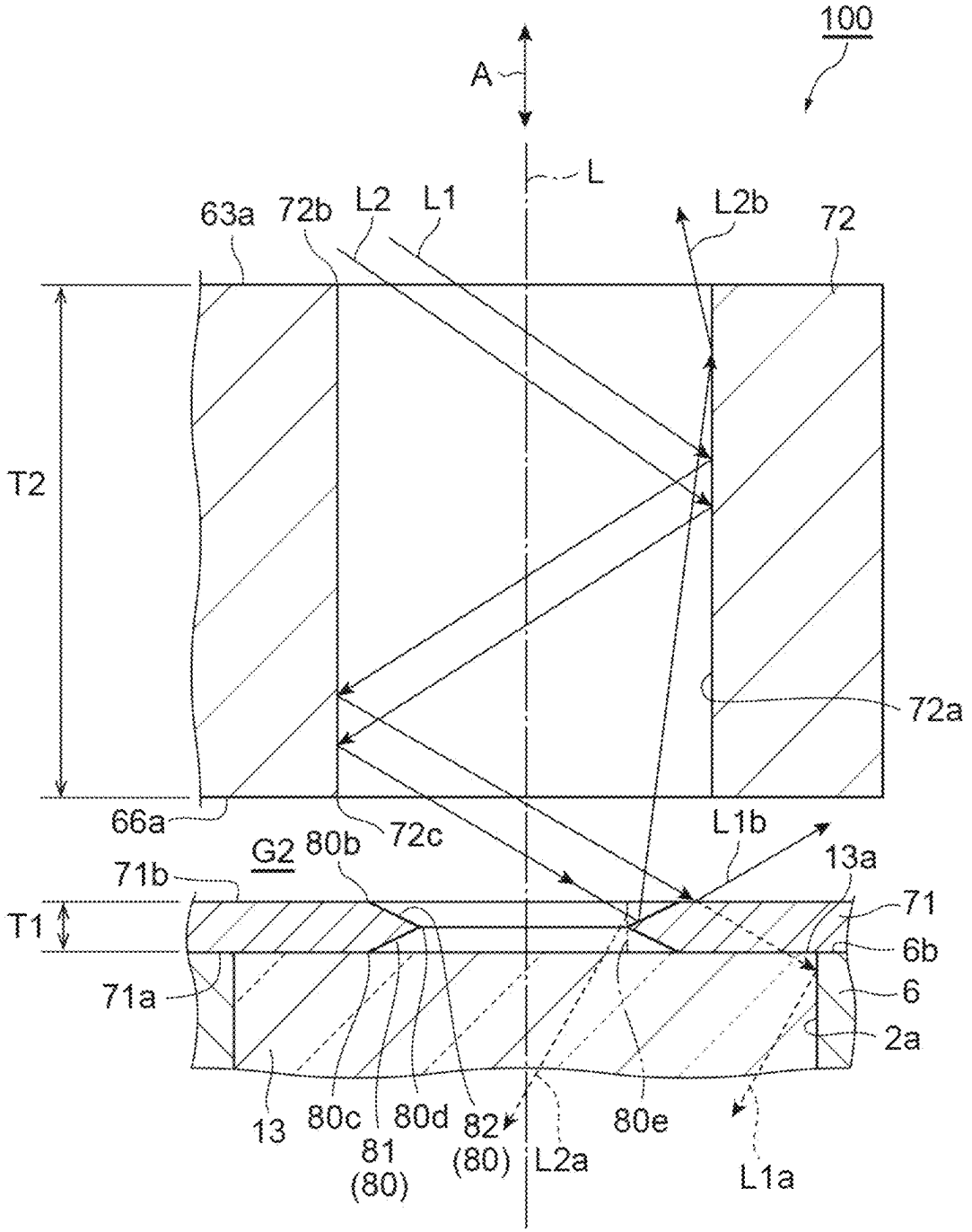
100
A
L
63a
72b
L2
L1
L2b
72
T2
72a
66a
72c
L1b
G2
80b
13a
71b
71
T1
6b
71a
6
2a
13
80c
80d
82
(80)
80e
81
(80)
L2a
L1a

Fig.9

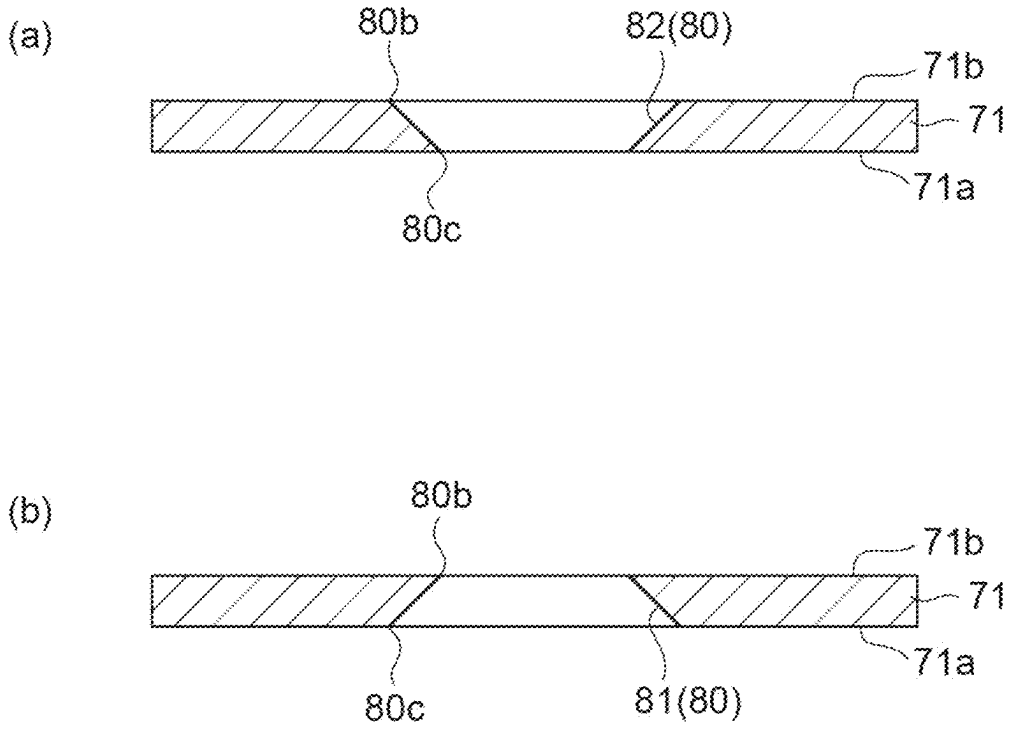

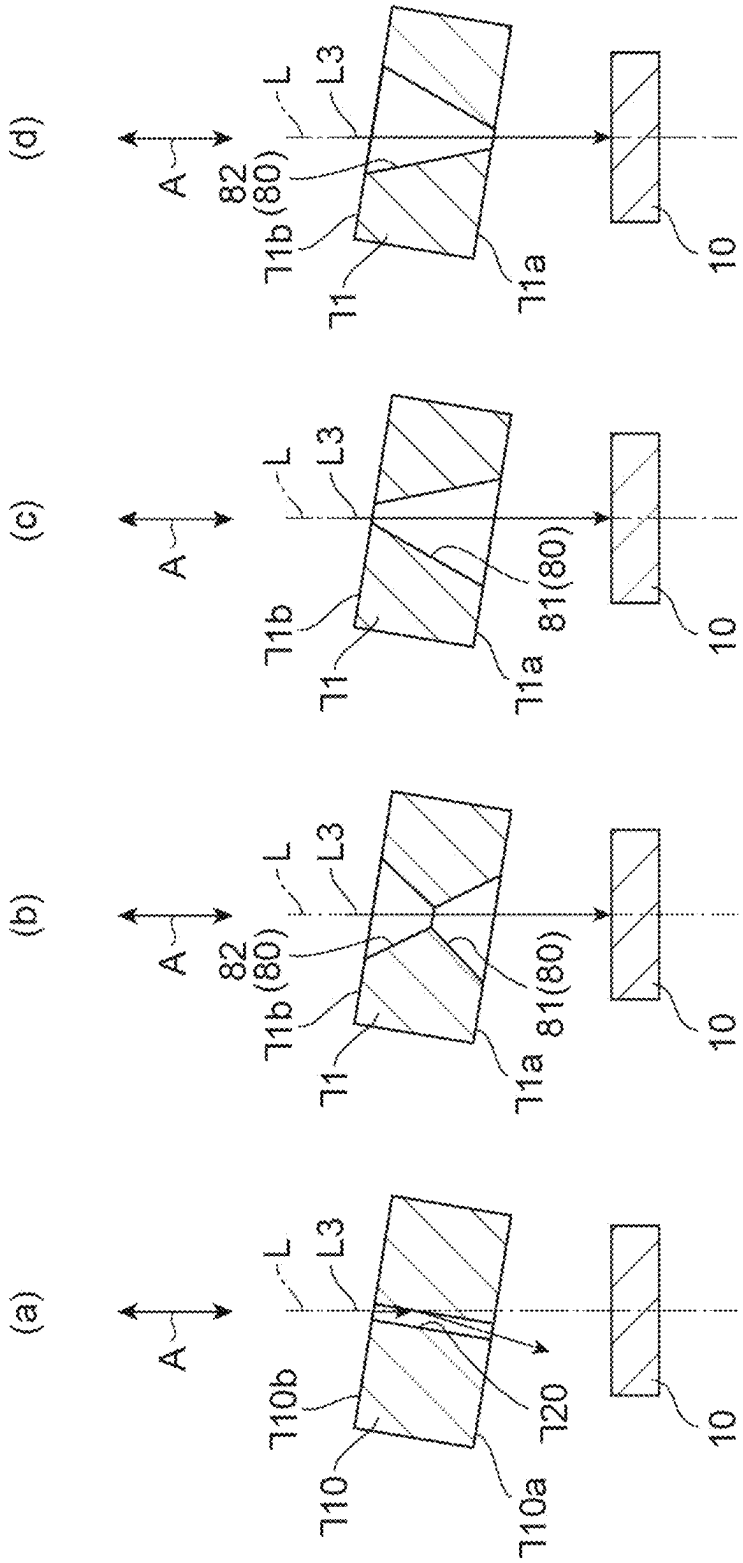
(a)
A
L
L3
710b
710
710a
720
10
(b)
A
82
(80)
L
L3
71b
71
71a
81(80)
10
(c)
A
L
L3
71b
71
71a
81(80)
10
(d)
A
82
(80)
L
L3
71b
71
71a
10

Fig.10

SPECTROSCOPIC UNIT AND SPECTROSCOPIC MODULE

TECHNICAL FIELD

The present disclosure relates to a spectroscopic unit and a spectroscopic module.

BACKGROUND ART

A spectroscopic module including a light source emitting light for irradiating an object, a spectroscopic unit configured to disperse light reflected by the object or light transmitted through the object, and a photodetector detecting the light dispersed by the spectroscopic unit is known (see, for example, Patent Literature 1). According to such a spectroscopic module, for example, components of an object can be analyzed in a non-destructive manner.

CITATION LIST

Patent Literature

[Patent Literature 1] Japanese Unexamined Patent Publication No. 2014-145643

SUMMARY OF INVENTION

Technical Problem

In the spectroscopic module as described above, there are cases in which a Fabry-Perot interference filter is applied to the spectroscopic unit. In that case, improving the spectral accuracy by the Fabry-Perot interference filter is extremely important, for example, in improving the accuracy of analysis of components of an object.

An objective of the present disclosure is to provide a spectroscopic unit and a spectroscopic module in which the spectral accuracy by a Fabry-Perot interference filter can be improved.

Solution to Problem

A spectroscopic unit of one aspect of the present disclosure includes a Fabry-Perot interference filter having a first mirror part and a second mirror part in which a distance therebetween is variable, a housing having a wall part formed with an opening facing the Fabry-Perot interference filter in a facing direction of the first mirror part and the second mirror part, the housing accommodating the Fabry-Perot interference filter, a first aperture part provided on a side opposite to the Fabry-Perot interference filter with respect to the wall part and formed with a first aperture facing the opening in the facing direction, and a second aperture part provided on a side opposite to the wall part with respect to the first aperture part and formed with a second aperture facing the first aperture in the facing direction, in which a length of the second aperture in the facing direction is larger than a length of the first aperture in the facing direction, an outer edge of the first aperture is positioned inside each of an outer edge of the opening and an outer edge of the second aperture when viewed from the facing direction, and the first aperture includes at least one of a first tapered portion reaching a first surface of the first aperture part on the wall part side and extending toward the first surface, and a second tapered portion reaching a second surface of the first aperture part on the second aperture part side and extending toward the second surface.

In the spectroscopic unit, a length of the second aperture in the facing direction is larger than a length of the first aperture in the facing direction, and the outer edge of the first aperture is positioned inside each of an outer edge of the opening and the outer edge of the second aperture when viewed from the facing direction. Therefore, light that has passed through the second aperture, the first aperture, and the opening is incident on the Fabry-Perot interference filter in a state in which a range of the incident angle is made small. Thereby, the Fabry-Perot interference filter can be made to function appropriately. Also, in this spectroscopic unit, the outer edge of the first aperture is positioned inside the outer edge of the second aperture when viewed from the facing direction, and the first aperture includes at least one of the first tapered portion and the second tapered portion. Therefore, light incident on the second aperture at a large incident angle becoming stray light by being incident into the housing while being reflected by an inner surface of the second aperture can be suppressed. As described above, according to the spectroscopic unit, a resolution can be improved in a spectroscopic spectrum obtained by the Fabry-Perot interference filter, and the spectral accuracy by the Fabry-Perot interference filter can be improved.

In the spectroscopic unit of one aspect of the present disclosure, the first aperture may include both the first tapered portion and the second tapered portion. Alternatively, in the spectroscopic unit of one aspect of the present disclosure, the first aperture may include only the second tapered portion, and the second tapered portion may reach both the first surface and the second surface. In these cases, even when light incident on the second aperture at a large incident angle travels into the second aperture while being reflected by the inner surface of the second aperture, the light is reflected by the inner surface of the second tapered portion toward a side opposite to the inside of the housing. Therefore, according to this, the light incident on the second aperture at a large incident angle becoming stray light by being incident into the housing while being reflected by the inner surface of the second aperture can be reliably suppressed.

In the spectroscopic unit of one aspect of the present disclosure, the outer edge of the first aperture may be positioned inside an outer edge of a light transmission region of the Fabry-Perot interference filter when viewed from the facing direction. According to this, a proportion of light transmitting through the light transmission region of the Fabry-Perot interference filter in the light that has passed through the second aperture and the first aperture can be increased.

In the spectroscopic unit of one aspect of the present disclosure, the outer edge of the opening may be positioned outside the outer edge of the second aperture when viewed from the facing direction. According to this, a range of the incident angle of the light to be incident into the housing can be appropriately defined by the first aperture and the second aperture.

In the spectroscopic unit of one aspect of the present disclosure, the first aperture may be an opening formed by etching. In this case, the first aperture has a highly accurate shape as compared with a case in which the first aperture is an opening formed by, for example, machining. Therefore, according to this, the first aperture can be made to function appropriately.

In the spectroscopic unit of one aspect of the present disclosure, the first aperture part may be a first aperture

member formed separately from the wall part and may be provided on a surface of the wall part. According to this, a degree of freedom in designing the first aperture part such as selection of a suitable material can be improved. Also, a positional relationship between the first aperture and the Fabry-Perot interference filter can be adjusted while the accuracy for positioning the Fabry-Perot interference filter in the housing can be relaxed by forming a large light incident opening in the housing. Further, even if a gap is formed between the first aperture part and the second aperture part, the light becoming stray light by being incident into the housing via the gap can be suppressed.

In the spectroscopic unit of one aspect of the present disclosure, the first aperture part may be fixed to the wall part. According to this, deviation in positional relationship between the first aperture and the Fabry-Perot interference filter due to vibration or the like can be prevented from occurring.

In the spectroscopic unit of one aspect of the present disclosure, the second aperture part may be a second aperture member formed separately from the first aperture part. According to this, a degree of freedom in designing the second aperture part and the first aperture part such as selection of a suitable material can be improved. Also, a positional relationship between the second aperture and the Fabry-Perot interference filter can be adjusted while the accuracy for positioning the Fabry-Perot interference filter in the housing can be relaxed by forming a large light incident opening in the housing. Also, a positional relationship between the second aperture and the first aperture can be adjusted.

In the spectroscopic unit of one aspect of the present disclosure, a cross-sectional shape of the first aperture in a direction perpendicular to the facing direction may be circular, and a cross-sectional shape of the second aperture in the direction perpendicular to the facing direction may be circular. According to this, an aperture having a desired performance can be easily formed.

In the spectroscopic unit of one aspect of the present disclosure, a region in the first aperture may be a space, and a region in the second aperture may be a space. According to this, loss of light while passing through the first aperture and the second aperture can be prevented.

The spectroscopic unit of one aspect of the present disclosure may further include a photodetector disposed in the housing and configured to detect light transmitted through the Fabry-Perot interference filter. According to this, dispersed light can be detected with high accuracy while suppressing occurrence of noise caused by stray light. Also, since the photodetector is disposed in the housing, reduction in size of the spectroscopic unit including the photodetector can be achieved.

The spectroscopic unit of one aspect of the present disclosure may further include a bandpass filter disposed between the first aperture and the Fabry-Perot interference filter, in which the first aperture part and the second aperture part may be configured so that all light which has passed through the first aperture and the second aperture is incident on the bandpass filter. According to this, all the light that has passed through the second aperture, the first aperture, and the opening is incident on the bandpass filter in a state in which a range of the incident angle is made small. Thereby, the bandpass filter functions appropriately, and light in a desired wavelength range is incident on the Fabry-Perot interference filter in a state in which the range of the incident angle is made small. Therefore, a resolution improves in the spectroscopic spectrum obtained by the Fabry-Perot interference filter.

In the spectroscopic unit of one aspect of the present disclosure, the first aperture part and the second aperture part may be configured so that all the light which has passed through the first aperture and the second aperture and transmitted through the bandpass filter is incident on the Fabry-Perot interference filter. According to this, generation of stray light in the housing can be suppressed.

In the spectroscopic unit of one aspect of the present disclosure, the bandpass filter may be separated from the first aperture part via the wall part. According to this, since the bandpass filter is disposed in the housing, the bandpass filter can be protected from physical interference or the like.

A spectroscopic module of the present disclosure includes the spectroscopic unit described above, a light source, and a package accommodating the housing of the spectroscopic unit and the light source, in which the first aperture and the second aperture are disposed to be adjacent to a light emitting part of the light source along an outer surface of the package.

According to the spectroscopic module, a reflection-type spectroscopic module in which the spectral accuracy by the Fabry-Perot interference filter is improved can be realized.

Advantageous Effects of Invention

According to the present disclosure, it is possible to provide a spectroscopic unit and a spectroscopic module in which the spectral accuracy by a Fabry-Perot interference filter can be improved.

BRIEF DESCRIPTION OF DRAWINGS

FIG. **1** is a cross-sectional view of a photodetection device applied to a spectroscopic module of one embodiment.

FIG. **2** is a perspective view of a Fabry-Perot interference filter illustrated in FIG. **1**.

FIG. **3** is a cross-sectional view along line III-III illustrated in FIG. **2**.

FIG. **4** is a perspective view of the spectroscopic module of one embodiment.

FIG. **5** is a perspective view of an internal structure of the spectroscopic module illustrated in FIG. **4**.

FIG. **6** is a plan view of the spectroscopic module illustrated in FIG. **4**.

FIG. **7** is a cross-sectional view along line VII-VII illustrated in FIG. **6**.

FIG. **8** is a cross-sectional view of a spectroscopic unit illustrated in FIG. **7**.

FIG. **9** is a cross-sectional view of a modified example of a first aperture part illustrated in FIG. **8**.

FIG. **10** is a view for explaining an effect of the first aperture part illustrated in FIGS. **8** and **9**.

DESCRIPTION OF EMBODIMENTS

Hereinafter, an embodiment of the present disclosure will be described in detail with reference to the drawings. In each of the drawings, the same or corresponding portions are denoted by the same Reference Signs, and Duplicate Descriptions Thereof Will be Omitted.

[Photodetection Device]

Prior to description of a spectroscopic module of one embodiment, a photodetection device applied to the spectroscopic module will be described. As illustrated in FIG. **1**,

a photodetection device **1** includes a housing **2**. In the present embodiment, the housing **2** is a CAN package including a stein **3** and a cap **4**. The cap **4** includes a side wall **5** and a top wall (wall part) **6** that are integrally formed. A material of the stein **3** and the cap **4** may be, for example, a metal. The cap **4** has a cylindrical shape with a line L as a center line. The side wall **5** of the cap **4** extends along the line L. The top wall **6** of the cap **4** is provided on one end side of the side wall **5** in a direction along the line L. The top wall **6** extends along a surface intersecting the line L.

A wiring substrate **7** is fixed to an inner surface **3***a* of the stein **3**. A substrate material of the wiring substrate **7** may be, for example, silicon, a ceramic, quartz, glass, a plastic, or the like. A photodetector **8** and a temperature detector (not illustrated) such as a thermistor are mounted on the wiring substrate **7**. The photodetector **8** is disposed in the housing **2** so that a center line of a light receiving part thereof coincides with the line L. The photodetector **8** detects light transmitted through a Fabry-Perot interference filter **10** to be described later. In the present embodiment, the photodetector **8** is an infrared detector and is constituted by a light receiving element such as, for example, an InGaAs photodiode, a thermopile, or a bolometer. Further, the photodetector **8** may be constituted by a light receiving element such as, for example, a Si photodiode when detecting ultraviolet light, visible light, and near-infrared light. Also, the photodetector **8** may be constituted by one light receiving element or may be constituted by a plurality of light receiving elements.

A plurality of spacers **9** are fixed on the wiring substrate **7**. A material of the spacers **9** may be, for example, silicon, a ceramic, quartz, glass, a plastic, or the like. The Fabry-Perot interference filter **10** is fixed on the plurality of spacers **9**. The Fabry-Perot interference filter **10** is disposed in the housing **2** so that a center line of a light transmission region **10***a* thereof coincides with the line L. That is, the housing **2** accommodates the Fabry-Perot interference filter **10**. Further, in the present embodiment, the light transmission region **10***a* of the Fabry-Perot interference filter **10** has a circular shape when viewed from a direction parallel to the line L. Also, the plurality of spacers **9** may be formed integrally with the wiring substrate **7**. Also, the Fabry-Perot interference filter **10** may be fixed on one spacer **9**.

A plurality of lead pins **11** are fixed to the stein **3**. The lead pins **11** each penetrate the stein **3** in a state of maintaining electrical insulating properties and airtightness with the stein **3**. The lead pins **11** are each electrically connected to an electrode pad of the wiring substrate **7** and a terminal of the Fabry-Perot interference filter **10** via a wire **12**. Thereby, input/output of electrical signals or the like with respect to the Fabry-Perot interference filter **10**, the photodetector **8**, and the temperature detector is made possible.

An opening **2***a* is formed in the housing **2**. The opening **2***a* is formed in the top wall **6** of the cap **4** so that a center line thereof coincides with the line L. The opening **2***a* faces the light transmission region **10***a* of the Fabry-Perot interference filter **10** in the direction parallel to the line L. In the present embodiment, the opening **2***a* has a circular shape when viewed from the direction parallel to the line L. A light transmitting member **13** is joined to an inner surface **6***a* of the top wall **6** to close the opening **2***a*. A material of the light transmitting member **13** may be, for example, glass or the like. The light transmitting member **13** includes a light incident surface **13***a* and a light emitting surface **13***b* facing each other in the direction parallel to the line L, and a side surface **13***c*. The light incident surface **13***a* is substantially coplanar with an outer surface (surface) **6***b* of the top wall **6** of the cap **4** at the opening **2***a*. The side surface **13***c* is in contact with an inner surface **5***a* of the side wall **5** of the cap **4**. Such a light transmitting member **13** is formed by melting glass pellets disposed on an inner side of the cap **4** with the opening **2***a* on a downward side.

A bandpass filter **14** is fixed to the light emitting surface **13***b* of the light transmitting member **13** by an adhesive member **15** made of a light transmitting material. The bandpass filter **14** selectively transmits light in a measurement wavelength range (light in a predetermined wavelength range that needs to be incident on the light transmission region **10***a* of the Fabry-Perot interference filter **10**) of the photodetection device **1** in light transmitted through the light transmitting member **13**. In the present embodiment, the bandpass filter **14** has, for example, a quadrangular plate shape. The bandpass filter **14** includes a light incident surface **14***a* and a light emitting surface **14***b* facing each other in the direction parallel to the line L, and four side surfaces **14***c*. The bandpass filter **14** is constituted by a light transmitting member made of, for example, silicon, glass, or the like and a dielectric multilayer film formed on a surface of the light transmitting member. The dielectric multilayer film is formed of a film formed of a high-refractive material (for example, TiO_2, Ta_2O_5, or the like) and a film formed of a low-refractive material (for example, SiO_2, MgF_2, or the like).

The adhesive member **15** includes a first portion **15***a* and a second portion **15***b*. The first portion **15***a* is a portion of the adhesive member **15** disposed between the light emitting surface **13***b* of the light transmitting member **13** and the light incident surface **14***a* of the bandpass filter **14**. The second portion **15***b* is a portion of the adhesive member **15** disposed between the side surface **14***c* of the bandpass filter **14** and the inner surface **5***a* of the side wall **5** of the cap **4** on the light emitting surface **13***b* of the light transmitting member **13**.

In the photodetection device **1** configured as described above, when light is incident on the bandpass filter **14** from the outside of the housing **2** through the opening **2***a*, the light transmitting member **13**, and the adhesive member **15**, only light in a predetermined wavelength range passes through the bandpass filter **14**. The light transmitted through the bandpass filter **14** is incident on the light transmission region **10***a* of the Fabry-Perot interference filter **10**, and light having a wavelength corresponding to a distance between a first mirror part **35** and a second mirror part **36**, which will be described later, passes through the light transmission region **10***a*. The light transmitted through the light transmission region **10***a* is incident on the light receiving part of the photodetector **8** and then detected by the photodetector **8**. Therefore, the photodetector **8** detects an intensity of the light transmitted through the light transmission region **10***a* while changing a distance between the first mirror part **35** and the second mirror part **36** in the Fabry-Perot interference filter **10**, and thereby a spectroscopic spectrum can be obtained.

[Fabry-Perot Interference Filter]

The Fabry-Perot interference filter **10** described above will be described in more detail. As illustrated in FIGS. **2** and **3**, the light transmission region **10***a* that transmits light having a wavelength according to a distance between the first mirror part **35** and the second mirror part **36** is provided in the Fabry-Perot interference filter **10**. The light transmission region **10***a* is, for example, a columnar region with the line L as a center line.

The Fabry-Perot interference filter **10** includes a substrate **21**. The substrate **21** has, for example, a rectangular plate shape. A material of the substrate **21** may be, for example,

silicon, quartz, glass, or the like. The substrate **21** has a first surface **21***a* and a second surface **21***b* facing each other in the direction parallel to the line L. The first surface **21***a* is a surface on a light incident side (on the bandpass filter **14** side). The second surface **21***b* is a surface on a light emitting side (on the photodetector **8** side).

A first layer structure **30** is disposed on the first surface **21***a* of the substrate **21**. The first layer structure **30** is configured by laminating a first antireflection layer **31**, a first laminate **32**, a first intermediate layer **33**, and a second laminate **34** in that order on the first surface **21***a*. A gap (air gap) S is formed between the first laminate **32** and the second laminate **34** by the first intermediate layer **33** having a frame shape. When the material of the substrate **21** may be silicon, a material of the first antireflection layer **31** and the first intermediate layer **33** may be, for example, silicon oxide. A thickness of the first intermediate layer **33** is, for example, tens of nanometers to tens of micrometers.

A portion of the first laminate **32** corresponding to the light transmission region **10***a* functions as the first mirror part **35**. The first laminate **32** is formed by alternately laminating a plurality of polysilicon layers and a plurality of silicon nitride layers layer by layer. An optical thickness of each of the polysilicon layers and the silicon nitride layers constituting the first mirror part **35** is preferably an integral multiple of ¼ of a central transmission wavelength of light transmitting through the light transmission region **10***a*. Further, the first mirror part **35** may be disposed on the first surface **21***a* of the substrate **21** without interposing the first antireflection layer **31**.

A portion of the second laminate **34** corresponding to the light transmission region **10***a* functions as the second mirror part **36**. The second mirror part **36** faces the first mirror part **35** via a gap S in the direction parallel to the line L. The second laminate **34** is formed by alternately laminating a plurality of polysilicon layers and a plurality of silicon nitride layers layer by layer. An optical thickness of each of the polysilicon layers and the silicon nitride layers constituting the second mirror part **36** is preferably an integral multiple of ¼ of a central transmission wavelength of light transmitting through the light transmission region **10***a*.

Further, in the first laminate **32** and the second laminate **34**, a silicon oxide layer may be disposed instead of the silicon nitride layer. Also, materials of the layers constituting the first laminate **32** and the second laminate **34** are not limited to the above-described materials, and may include, for example, titanium oxide, tantalum oxide, zirconium oxide, magnesium fluoride, aluminum oxide, calcium fluoride, silicon, germanium, zinc sulfide, and the like.

A plurality of through holes **34***b* are formed in a portion of the second laminate **34** corresponding to the gap S. Each of the through holes **34***b* reaches the gap S from a surface **34***a* on a side of the second laminate **34** opposite to the first laminate **32**. The plurality of through holes **34***b* are formed to such an extent that they do not substantially affect the function of the second mirror part **36**. The plurality of through holes **34***b* are used to form the gap S by removing a part of the first intermediate layer **33** by etching.

A first electrode **22** is formed in the first laminate **32** to surround the light transmission region **10***a*. A second electrode **23** is formed in the first laminate **32** to include the light transmission region **10***a*. The first electrode **22** and the second electrode **23** are formed by causing a polysilicon layer of the first laminate **32** closest to the gap S to be doped with impurities to lower a resistance thereof. In the second laminate **34**, a third electrode **24** is formed to face the first electrode **22** and the second electrode **23** via the gap S. The third electrode **24** is formed by causing a polysilicon layer of the second laminate **34** closest to the gap S to be doped with impurities to lower a resistance thereof. Further, the second electrode **23** need only have substantially the same size as the light transmission region **10***a* or a size equal to or larger than that of the light transmission region **10***a*.

A pair of first terminals **25** and a pair of second terminals **26** are provided in the first layer structure **30**. The pair of first terminals **25** face each other with the light transmission region **10***a* interposed therebetween. The first terminals **25** are each disposed in a through hole extending from the surface **34***a* of the second laminate **34** to the first laminate **32**. The first terminals **25** are each electrically connected to the first electrode **22** via a wiring **22***a* formed in the first laminate **32**. The pair of second terminals **26** face each other with the light transmission region **10***a* interposed therebetween in a direction perpendicular to a direction in which the pair of first terminals **25** face each other. The second terminals **26** are each disposed in a through hole extending from the surface **34***a* of the second laminate **34** to the inside of the first intermediate layer **33**. The second terminals **26** are each electrically connected to the second electrode **23** via a wiring **23***a* formed in the first laminate **32** and electrically connected to the third electrode **24** via a wiring **24***a* formed in the second laminate **34**.

Trenches **27** and **28** are provided on a surface **32***a* of the first laminate **32** on the second laminate **34** side. The trench **27** extends in an annular shape to surround a connection portion of the wiring **23***a* with the second terminal **26**. The trench **27** electrically insulates the first electrode **22** from the wiring **23***a*. The trench **28** extends in an annular shape along an inner edge of the first electrode **22**. The trench **28** electrically insulates the first electrode **22** from a region on an inner side of the first electrode **22** (that is, a region in which the second electrode **23** is present). A trench **29** is provided on the surface **34***a* of the second laminate **34**. The trench **29** extends in an annular shape to surround the first terminal **25**. The trench **29** electrically insulates the first terminal **25** from the third electrode **24**. A region in each of the trenches **27**, **28**, and **29** may be an insulating material or may be a gap.

A second layer structure **40** is disposed on the second surface **21***b* of the substrate **21**. The second layer structure **40** is configured by laminating a second antireflection layer **41**, a third laminate **42**, a second intermediate layer **43**, and a fourth laminate **44** in that order on the second surface **21***b*. The second antireflection layer **41**, the third laminate **42**, the second intermediate layer **43**, and the fourth laminate **44** have the same configurations as the first antireflection layer **31**, the first laminate **32**, the first intermediate layer **33**, and the second laminate **34**. That is, the second layer structure **40** has a laminated structure symmetrical with the first layer structure **30** with respect to the substrate **21**. When the second layer structure **40** is configured to correspond to the first layer structure **30**, the Fabry-Perot interference filter **10** warping is suppressed.

An opening **40***a* is formed in the third laminate **42**, the second intermediate layer **43**, and the fourth laminate **44** to include the light transmission region **10***a*. The opening **40***a* has, for example, a columnar shape with the line L as a center line and has substantially the same diameter as the light transmission region **10***a*. The opening **40***a* opens toward a light emitting side, and a bottom surface of the opening reaches the second antireflection layer **41**. The opening **40***a* allows light transmitted through the first mirror part **35** and the second mirror part **36** to pass therethrough.

A light-shielding layer **45** is formed on a surface of the fourth laminate **44** on the light emitting side. A material of the light-shielding layer **45** may be, for example, aluminum or the like. A protective layer **46** is formed on a surface of the light-shielding layer **45** and an inner surface of the opening **40***a*. A material of the protective layer **46** may be, for example, aluminum oxide. Further, when a thickness of the protective layer **46** is set to 1 to 100 nm (preferably about 30 nm), an optical influence of the protective layer **46** can be ignored.

In the Fabry-Perot interference filter **10** configured as described above, when a voltage is applied between the first terminal **25** and the second terminal **26**, a potential difference is generated between the first electrode **22** and the third electrode **24**, and an electrostatic force corresponding to the potential difference is generated between the first electrode **22** and the third electrode **24**. Thereby, the second mirror part **36** is attracted to the first mirror part **35** side fixed to the substrate **21**, and a distance between the first mirror part **35** and the second mirror part **36** changes. At this time, since a potential difference is not generated between the second electrode **23** and the third electrode **24**, flatness of the second mirror part **36** in the light transmission region **10***a* is secured. As described above, in the Fabry-Perot interference filter the distance between the first mirror part **35** and the second mirror part **36** is variable. Here, a wavelength of light transmitting through the light transmission region **10***a* depends on the distance between the first mirror part **35** and the second mirror part **36**. Therefore, when a voltage applied between the first terminal **25** and the second terminal **26** is adjusted, a wavelength of light transmitting through the light transmission region **10***a* can be adjusted.

[Spectroscopic Module]

A spectroscopic module of one embodiment to which the above-described photodetection device **1** is applied will be described. In the following description, a direction in which the first mirror part **35** and the second mirror part **36** face each other (in the present embodiment, a direction parallel to the line L) is referred to as a direction A.

As illustrated in FIGS. **4** and **5**, the spectroscopic module **50** includes a photodetection device **1**, a light source **51**, a wiring board **52**, and a package **53**. The light source **51** emits light for irradiating an object. The light source **51** may be, for example, an infrared lamp that emits light in a wavelength range of near infrared to mid-infrared. The plurality of lead pins **11** of the photodetection device **1** and a plurality of lead pins of the light source **51** are electrically connected to the wiring board **52**. The package **53** accommodates the photodetection device **1**, the light source **51**, the wiring board **52**, the wiring substrate **56**, and the like. The package **53** has, for example, a rectangular parallelepiped shape. The package **53** has a package main body **54** and a lid **55**. The photodetection device **1**, the light source **51**, the wiring board **52**, a wiring substrate **56**, and the like are disposed in the package main body **54**. The lid **55** has a planar outer surface **55***a*. In the spectroscopic module **50**, irradiation of the object with light and detection of light reflected by the object can be performed in a state in which an outer surface of a cover **20** (see FIG. **7**) is brought into contact with the object. Further, power is supplied to the spectroscopic module **50** via a general-purpose connector such as, for example, a USB (universal serial bus) socket. Also, the package **53** may also accommodate, for example, a wireless communication board, a battery case, or the like.

As illustrated in FIGS. **6** and **7**, a recessed part **91** is formed on an inner surface **54***b* of the package main body **54**. The wiring board **52** is placed on a bottom surface **91***a* of the recessed part **91**. The wiring board **52** is placed on the bottom surface **91***a* of the recessed part **91** so that a surface **52***a* of the wiring board **52** is coplanar with the inner surface **54***b* of the package main body **54**. The housing **2** is placed on the surface **52***a* of the wiring board **52**. The housing **2** is fixed to the wiring board **52** by the plurality of lead pins **11** that penetrate the wiring board **52** to be fixed to the wiring board **52**. The light source **51** is fixed to the wiring board **52**. The light source **51** is adjacent to the housing **2** in a direction perpendicular to the direction A. The light source **51** is fixed to the wiring board **52** by a lead pin holding part **51***b* that penetrates the wiring board **52** to be fixed to the wiring board **52** in a state of floating from the surface **52***a* of the wiring board **52**.

A recessed part **61** is formed on the outer surface **55***a* of the lid **55**. The cover (window glass) **20** formed of, for example, glass or the like is provided on a bottom surface **61***a* of the recessed part **61**. An outer surface of the cover **20** may be coplanar with the outer surface **55***a* of the lid **55** or may slightly protrude with respect to the outer surface **55***a*. A recessed part **62** opening toward an outer side of the package **53** is formed on the bottom surface **61***a* of the recessed part **61**. The recessed part **62** is constituted by a first portion **63** and a second portion **64**. The second portion **64** is deeper than the first portion **63**. A concave curved surface **62***b* is formed between a bottom surface **64***a* of the second portion **64** and a side surface **62***a* of the recessed part **62**. The concave curved surface **62***b* has a shape corresponding to a round chamfered surface applied to a corner formed by the bottom surface **64***a* and the side surface **62***a*.

A recessed part **65** is formed on an inner surface **55***b* of the lid **55**. A recessed part **66** opening toward an inner side of the package **53** is formed on a bottom surface **65***a* of the recessed part **65**. When viewed from the direction A, an outer edge of the recessed part **66** is positioned outside an outer edge of the first portion **63** of the recessed part **62**. The recessed part **66** communicates with the second portion **64** of the recessed part **62**. A portion of the lid **55** between the first portion **63** of the recessed part **62** and the recessed part **66** constitutes a second aperture part **72**. That is, the second aperture part **72** is integrally formed with the lid **55**. The second aperture part **72** protrudes from the side surface **63***b* of the first portion **63** of the recessed part **62**. A second aperture **72***a* is formed in the second aperture part **72**.

A hole **67** is formed on the bottom surface **64***a* of the second portion **64** of the recessed part **62**. The hole **67** opens to the bottom surface **64***a* of the second portion **64** and the bottom surface **65***a* of the recessed part **65**. When viewed from the direction A, the hole **67** has a size including the second aperture **72***a*. That is, when shapes of the hole **67** and the second aperture **72***a* in a cross section perpendicular to the direction A are each circular, a minimum diameter of the hole **67** in the cross section is larger than a maximum diameter of the second aperture **72***a* in the cross section.

The lid **55** is attached to the package main body **54** so that the inner surface **55***b* is in contact with the inner surface **54***b* of the package main body **54**. In a state in which the lid **55** is attached to the package main body **54**, the housing **2** of the photodetection device **1** is disposed in the recessed part **66** of the lid **55**, and the light source **51** is disposed in the hole **67** of the lid **55**. More specifically, the cap **4** of the housing **2** is disposed in the recessed part **66** with the opening **2***a* of the housing **2** facing the second aperture **72***a*. Also, the light source **51** is disposed in the hole **67** in a state in which the light emitting part **51***a* of the light source **51** is disposed in the second portion **64** of the recessed part **62**. In a state in which the lid **55** is attached to the package main body **54**, at

least a part of the photodetection device **1** and the light source **51** are exposed in the recessed part **62** of the lid **55**.

A gap is formed between the lid **55** and the housing **2**. More specifically, in a state in which the lid **55** is attached to the package main body **54**, a gap G**1** is formed between a side surface **66***b* of the recessed part **66** of the lid **55** and the side wall **5** of the cap **4** of the housing **2**. Also, in a state in which the lid **55** is attached to the package main body **54**, a gap G**2** is formed between a bottom surface **66***a* of the recessed part **66** of the lid **55** and the top wall **6** of the cap **4**. A length of the gap G**2** in the direction A is, for example, about 0.25 mm A first aperture part **71** is provided on the outer surface **6***b* of the top wall **6** of the housing **2**. The first aperture part **71** is disposed in the gap G**2**. A first aperture **80** is formed in the first aperture part **71**.

In the spectroscopic module **50** configured as described above, a light incident opening **72***b* of the second aperture **72***a*, a light incident opening **80***b* of the first aperture **80** (see FIG. **8**), and the light emitting part **51***a* of the light source **51** are disposed in the recessed part **62**. The second aperture **72***a* and the first aperture **80** are disposed to be adjacent to the light emitting part **51***a* of the light source **51** along the outer surface **55***a* of the lid **55**.

The first aperture **80** and the second aperture **72***a* described above will be described in more detail. In the present embodiment, the bandpass filter **14** is separated from the first aperture part **71** via the top wall **6** of the cap **4** which is a part of the housing **2**. The bandpass filter **14** is disposed between the first aperture **80** and the Fabry-Perot interference filter **10**. In the present embodiment, a spectroscopic unit **100** is constituted by the housing **2**, the first aperture part **71**, the second aperture part **72**, the bandpass filter **14**, the Fabry-Perot interference filter **10**, and the photodetector **8**.

As illustrated in FIG. **8**, the first aperture part **71** is provided on a side opposite to the Fabry-Perot interference filter **10** with respect to the top wall **6**. The first aperture part **71** has, for example, a quadrangular plate shape (see FIG. **5**). A thickness of the first aperture part **71** is, for example, about 0.1 mm to 0.2 mm. The first aperture part **71** has a first surface **71***a* and a second surface **71***b* on a side opposite to the first surface **71***a*. The first aperture part **71** is disposed between the top wall **6** and the second aperture part **72** so that the first surface **71***a* faces the outer surface **6***b* of the top wall **6** and the second surface **71***b* faces the second aperture part **72**. The first surface **71***a* of the first aperture part **71** is in contact with the outer surface **61***b* of the top wall **6**. The first aperture part **71** is fixed to the outer surface **6***b* of the top wall **6** by, for example, resin bonding or the like. The first aperture part **71** may be provided on the outer surface **61***b* of the top wall **6** via an adhesive member such as a resin. The first aperture part **71** may be provided on the outer surface **6***b* of the top wall **6** via a member such as a thin plate. As described above, the first aperture part **71** is a first aperture member formed separately from the top wall **6**. A material of the first aperture part **71** may be, for example, stainless steel or the like.

The first aperture **80** formed in the first aperture part **71** is a through hole penetrating the first aperture part **71**. The first aperture opens to the first surface **71***a* and the second surface **71***b*. The first aperture **80** is an opening formed by etching. A region in the first aperture **80** is space. The first aperture **80** faces the opening **2***a* in the direction A. A center line of the first aperture **80** coincides with the line L. The light incident opening **80***b* of the first aperture **80** is a portion of the first aperture **80** that opens to the second surface **71***b*. A light emitting opening **80***c* of the first aperture **80** is a portion of the first aperture **80** that opens to the first surface **71***a*.

The first aperture **80** includes a first tapered portion **81** and a second tapered portion **82**. The first tapered portion **81** reaches the first surface **71***a* of the first aperture part **71** on the top wall **6** side and extends toward the first surface **71***a*. The second tapered portion **82** reaches the second surface **71***b* of the first aperture part **71** on the second aperture part **72** side and extends toward the second surface **71***b*.

In the present embodiment, the first tapered portion **81** and the second tapered portion **82** each have a truncated cone shape. That is, cross-sectional shapes of the first tapered portion **81** and the second tapered portion **82** in the direction perpendicular to the direction A are each circular. A cross-sectional shape of the first aperture **80** in the direction perpendicular to the direction A is circular. A diameter of the first tapered portion **81** gradually increases from the second surface **71***b* side toward the first surface **71***a*. A diameter of the second tapered portion **82** gradually increases from the first surface **71***a* side toward the second surface **71***b*. A rate of change in the diameter of the first tapered portion **81** is the same as a rate of change in the diameter of the second tapered portion **82**. That is, an angle between the first tapered portion **81** and the first surface **71***a* is the same as an angle between the second tapered portion **82** and the second surface **71***b*.

The first tapered portion **81** and the second tapered portion **82** are in contact with each other at a central position of the first aperture part **71** in the direction A. An outer edge **80***d* of the first aperture **80** is formed by an edge formed by the first tapered portion **81** and the second tapered portion **82** being in contact with each other. When viewed from the direction A, the outer edge **80***d* has a circular shape. The outer edge of the first aperture **80** refers to an innermost edge of the first aperture **80** when viewed from the direction A. The first tapered portion **81** and the second tapered portion **82** are plane-symmetrical with respect to a plane (a plane including the outer edge **80***d*) that divides the first aperture part **71** into two in the direction A.

The second aperture part **72** is provided on a side opposite to the top wall **6** with respect to the first aperture part **71**. The second aperture part **72** is separated from the second surface **71***b* of the first aperture part **71**. The second aperture part **72** is a second aperture member formed separately from the first aperture part **71**. The second aperture **72***a* formed in the second aperture part **72** is a through hole penetrating the second aperture part **72**. The second aperture **72***a* opens to a bottom surface **63***a* of the first portion **63** of the recessed part **62** and the bottom surface **66***a* of the recessed part **66** which are formed in the lid **55**.

A region in the second aperture **72***a* is space. The second aperture **72***a* faces the first aperture **80** in the direction A. A center line of the second aperture **72***a* coincides with the line L. The light incident opening **72***b* of the second aperture **72***a* is a portion of the second aperture **72***a* that opens to the bottom surface **63***a* of the first portion **63** of the recessed part **62**. A light emitting opening **72***c* of the second aperture **72***a* is a portion of the second aperture **72***a* that opens to the bottom surface **66***a* of the recessed part **66**. In the present embodiment, a region in the second aperture **72***a* has a columnar shape. That is, a cross-sectional shape of the second aperture **72***a* in the direction perpendicular to the direction A is circular.

The second aperture part **72** is configured such that a value (an aspect ratio of the second aperture **72***a*) obtained by dividing a length T**2** of the second aperture **72***a* in the direction A by a width of the second aperture **72***a* in the

direction perpendicular to the direction A is 0.5 or more. The length of the second aperture **72***a* in the direction A refers to a distance between the light incident opening **72***b* and the light emitting opening **72***c*. The width of the second aperture **72***a* in the direction perpendicular to the direction A refers to a value of ½ of a sum of an effective diameter of the light incident opening **72***b* and an effective diameter of the light emitting opening **72***c*. The effective diameter of the light incident opening **72***b* refers to a diameter thereof when a shape of the light incident opening **72***b* is circular, and a diameter of a circle having an area thereof when the shape of the light incident opening **72***b* is other than circular. Similarly, the effective diameter of the light emitting opening **72***c* refers to a diameter when a shape of the light emitting opening **72***c* is circular, and a diameter of a circle having an area thereof when the shape of the light emitting opening **72***c* is other than circular.

A distance between the second aperture part **72** and the first aperture part **71** in the direction A (a distance between the bottom surface **66***a* and the second surface **71***b*) is smaller than the length T**2** of the second aperture **72***a* in the direction A. The length T**2** of the second aperture **72***a* is, for example, about 1 mm. The length T**2** of the second aperture **72***a* in the direction A is larger than a length T**1** of the first aperture **80** in the direction A. That is, a thickness of the second aperture part **72** is larger than a thickness of the first aperture part **71**. The length of the first aperture **80** in the direction A refers to a distance between the light incident opening **80***b* and the light emitting opening **80***c*. The length T**1** of the first aperture **80** is, for example, about 0.1 mm to 0.2 mm.

When viewed from the direction A, an outer edge of the opening **2***a* formed in the top wall **6** is positioned outside an outer edge of the second aperture **72***a*. That is, a diameter of the opening **2***a* is larger than a diameter of the second aperture **72***a*. When viewed from the direction A, the outer edge of the second aperture **72***a* is positioned inside an outer edge of the light transmission region **10***a* of the Fabry-Perot interference filter **10**. That is, the diameter of the second aperture **72***a* is smaller than a diameter of the light transmission region **10***a*. When viewed from the direction A, the outer edge **80***d* of the first aperture **80** is positioned inside each of the outer edge of the opening **2***a*, the outer edge of the second aperture **72***a*, and the outer edge of the light transmission region **10***a* of the Fabry-Perot interference filter **10**. That is, the diameter of the outer edge **80***d* is smaller than each of the diameter of the opening **2***a*, the diameter of the second aperture **72***a*, and the diameter of the light transmission region **10***a*. The distance between the second aperture part **72** and the first aperture part **71** in the direction A is smaller than the diameter of the outer edge of the second aperture **72***a*. The diameter of the opening **2***a* is, for example, about 1.5 mm. The diameter of the outer edge **80***d* of the first aperture **80** is, for example, about 0.5 mm. The diameter of the outer edge of the second aperture **72***a* is, for example, about 1.0 mm.

An incident angle and an emitting angle of light passing through the second aperture **72***a* and the first aperture **80** (light passing through the second aperture **72***a* and the first aperture **80** in an ideal state in which reflections or the like by an inner surface of the second aperture **72***a*, and an inner surface of the first tapered portion **81** and an inner surface of the second tapered portion **82** of the first aperture **80** are ignored) are defined by the light incident opening **72***b* of the second aperture **72***a* and the outer edge **80***d* of the first aperture **80**. In other words, the light incident opening **72***b* and the outer edge **80***d* are portions that define the incident angle and the emitting angle of the light passing through the second aperture **72***a* and the first aperture **80** (the light passing through the second aperture **72***a* and the first aperture **80** in an ideal state in which reflections or the like by the inner surface of the second aperture **72***a*, and the inner surface of the first tapered portion **81** and the inner surface of the second tapered portion **82** of the first aperture **80** are ignored).

The first aperture part **71** and the second aperture part **72** are configured so that all the light that has passed through the second aperture **72***a* and the first aperture **80** (the light that has passed through the second aperture **72***a* and the first aperture **80** in an ideal state in which reflections or the like by the inner surface of the second aperture **72***a*, and the inner surface of the first tapered portion **81** and the inner surface of the second tapered portion **82** of the first aperture **80** are ignored) is incident on the bandpass filter **14**. Further, the first aperture part **71** and the second aperture part **72** are configured so that all the light that has passed through the second aperture **72***a* and the first aperture **80** and transmitted through the bandpass filter **14** is incident on the Fabry-Perot interference filter **10**.

[Operation and Effects]

As described above, in the spectroscopic unit **100**, the length T**2** of the second aperture **72***a* in the direction A is larger than the length T**1** of the first aperture **80** in the direction A, and when viewed from the direction A, the outer edge **80***d* of the first aperture **80** is positioned inside each of the outer edge of the opening **2***a* and the outer edge of the second aperture **72***a*. Therefore, light that has passed through the second aperture **72***a*, the first aperture **80**, and the opening **2***a* is incident on the Fabry-Perot interference filter **10** in a state in which a range of the incident angle is made small. Thereby, the Fabry-Perot interference filter **10** can be made to function appropriately. Also, in the spectroscopic unit **100**, the outer edge **80***d* of the first aperture **80** is positioned inside the outer edge of the second aperture **72***a* when viewed from the direction A, and the first aperture **80** includes the first tapered portion **81** and the second tapered portion **82**. Therefore, light incident on the second aperture **72***a* at a large incident angle becoming stray light by being incident into the housing **2** while being reflected by the inner surface of the second aperture **72***a* can be suppressed. As described above, according to the spectroscopic unit **100**, a resolution can be improved in a spectroscopic spectrum obtained by the Fabry-Perot interference filter **10**, and the spectral accuracy by the Fabry-Perot interference filter **10** can be improved.

The above-described effect will be described in more detail. As illustrated in FIG. **8**, for example, when light L**1** is incident on the second aperture **72***a* at a large incident angle, the light L**1** travels toward the housing **2** while being reflected by the inner surface of the second aperture **72***a*. Here, for example, when the outer edge **80***d* of the first aperture **80** is positioned outside the outer edge of the second aperture **72***a*, or when the first aperture part **71** is not present, the light L**1** is reflected by the inner surface of the opening **2***a* (or passes directly through the opening **2***a*) and then is incident into the housing **2** (see the light L**1***a* illustrated by the dotted line). On the other hand, in the spectroscopic unit **100**, since the outer edge **80***d* of the first aperture **80** is positioned inside the outer edge of the second aperture **72***a*, the light L**1** is reflected by the second surface **71***b* of the first aperture part **71** and is not incident into the housing **2** (see light L**1***b* illustrated by the solid line).

Also, for example, when light L**2** is incident on the second aperture **72***a* at a large incident angle, the light L**2** travels

toward the housing **2** while being reflected by the inner surface of the second aperture **72***a*. Here, for example, when the first aperture **80** does not have the first tapered portion **81** and the second tapered portion **82**, and the region in the first aperture **80** has a columnar shape (see the portion illustrated by the two-dot dashed line), the light L**2** is reflected by an inner surface **80***e* of the first aperture **80** and then is incident into the housing **2** (see light L**2***a* illustrated by the dotted line). On the other hand, in the spectroscopic unit **100**, since the first aperture **80** includes the first tapered portion **81** and the second tapered portion **82**, the light L**2** is reflected by the inner surface of the second tapered portion **82** toward a side opposite to the inside of the housing **2** and is not incident into the housing **2** (see light L**2***b* illustrated by the solid line).

Incidentally, in a spectroscopic module such as the spectroscopic module **50**, even when there is dimensional variation in each part, it is required to surely assemble the parts. As a result, gaps such as the gap G**1** and the gap G**2** may be formed in the spectroscopic module **50** after the parts are assembled. When the gap G**2** is formed between the second aperture part **72** and the top wall **6**, there is a likelihood that light incident via the gap G**2** (for example, light not reflected by the object) will be incident into the housing **2** and become stray light. In the spectroscopic module **50**, the first aperture part **71** is provided on the outer surface **6***b* of the top wall **6**. According to this, as described above, not only the light incident on the second aperture **72***a* at a large incident angle but also the light incident via the gap G**2** becoming stray light by being incident into the housing **2** can be suppressed. In other words, even when the gap G**2** is difficult to be made zero, entering of stray light into the housing **2** can be reduced by disposing the first aperture part **71** in the gap G**2**. Thereby, an effect of suppressing entering of stray light that is the same as that when the gap G**2** is zero can be obtained.

Also, in the spectroscopic unit **100**, the first aperture **80** includes both the first tapered portion **81** and the second tapered portion **82**. According to this, even when light incident on the second aperture **72***a* at a large incident angle travels into the second aperture **72***a* while being reflected by the inner surface of the second aperture **72***a*, the light is reflected by the inner surface of the second tapered portion **82** toward a side opposite to the inside of the housing **2**. Therefore, the light incident on the second aperture **72***a* at a large incident angle becoming stray light by being incident into the housing **2** while being reflected by the inner surface of the second aperture **72***a* can be reliably suppressed. Also, even if the first aperture part **71** is provided in an opposite direction (misassembled), the above-described effect can be obtained. That is, even when the first aperture part **71** is provided so that the first surface **71***a* faces the second aperture part **72** and the second surface **71***b* faces the outer surface **6***b* of the top wall **6**, the light L**2** can be reflected as the light L**2***b* by the first tapered portion **81** instead of the second tapered portion **82** as described above. Further, the first tapered portion **81** and the second tapered portion **82** are plane-symmetrical with respect to a plane that divides the first aperture part **71** into two in the direction A. According to this, as described above, even when the first aperture part **71** is provided in an opposite direction, the same function as the second tapered portion **82** can be exhibited by the first tapered portion **81**.

Also, in the spectroscopic unit **100**, the outer edge **80***d* of the first aperture **80** is positioned inside the outer edge of the light transmission region **10***a* of the Fabry-Perot interference filter **10** when viewed from the direction A. According to this, a proportion of light transmitting through the light transmission region **10***a* of the Fabry-Perot interference filter **10** in the light that has passed through the second aperture **72***a* and the first aperture **80** can be increased.

Also, in the spectroscopic unit **100**, the outer edge of the opening **2***a* is positioned outside the outer edge of the second aperture **72***a* when viewed from the direction A. According to this, a range of the incident angle of the light to be incident into the housing **2** can be appropriately defined by the first aperture **80** and the second aperture **72***a*.

Also, in the spectroscopic unit **100**, the first aperture **80** is an opening formed by etching. According to this, the first aperture **80** has a highly accurate shape as compared with a case in which the first aperture **80** is an opening formed by, for example, machining Therefore, according to this, the first aperture **80** can be made to function appropriately.

Also, in the spectroscopic unit **100**, the first aperture part **71** is the first aperture member formed separately from the top wall **6** and is provided on the outer surface **6***b* of the top wall **6**. According to this, a degree of freedom in designing the first aperture part **71** such as selection of a suitable material can be improved. Also, a positional relationship between the first aperture **80** and the Fabry-Perot interference filter **10** can be adjusted while the accuracy for positioning the Fabry-Perot interference filter **10** in the housing **2** can be relaxed by forming a large light incident opening in the housing **2**. Further, even if the gap G**2** is formed between the first aperture part **71** and the second aperture part **72**, as described above, the light becoming stray light by being incident into the housing **2** via the gap G**2** can be suppressed.

Also, in the spectroscopic unit **100**, the first aperture part **71** is fixed to the top wall **6**. According to this, deviation in positional relationship between the first aperture **80** and the Fabry-Perot interference filter **10** due to vibration or the like can be prevented from occurring.

Also, in the spectroscopic unit **100**, the second aperture part **72** is the second aperture member formed separately from the first aperture part **71**. According to this, a degree of freedom in designing the second aperture part **72** and the first aperture part **71** such as selection of a suitable material can be improved. Also, a positional relationship between the second aperture **72***a* and the Fabry-Perot interference filter **10** can be adjusted while the accuracy for positioning the Fabry-Perot interference filter **10** in the housing **2** can be relaxed by forming a large light incident opening in the housing **2**. Also, a positional relationship between the second aperture **72***a* and the first aperture **80** can be adjusted.

Also, in the spectroscopic unit **100**, a cross-sectional shape of the first aperture **80** in the direction perpendicular to the direction A is circular, and a cross-sectional shape of the second aperture **72***a* in the direction perpendicular to the direction A is circular. According to this, an aperture having a desired performance can be easily formed.

Also, in the spectroscopic unit **100**, the region in the first aperture **80** is a space, and the region in the second aperture **72***a* is a space. According to this, loss of light while passing through the first aperture **80** and the second aperture **72***a* can be prevented.

Also, the spectroscopic unit **100** includes the photodetector **8** disposed in the housing **2** and detecting light transmitted through the Fabry-Perot interference filter **10**. According to this, dispersed light can be detected with high accuracy while suppressing occurrence of noise caused by stray light. Also, since the photodetector **8** is disposed in the housing **2**, reduction in size of the spectroscopic unit **100** including the photodetector **8** can be achieved.

Also, the spectroscopic unit **100** includes the bandpass filter **14** disposed between the first aperture **80** and the

Fabry-Perot interference filter **10**. The first aperture part **71** and the second aperture part **72** are configured so that all the light that has passed through the first aperture **80** and the second aperture **72***a* is incident on the bandpass filter **14**. According to this, all the light that has passed through the second aperture **72***a*, the first aperture **80**, and the opening **2***a* is incident on the bandpass filter **14** in a state in which a range of the incident angle is made small. Thereby, the bandpass filter **14** functions appropriately, and light in a desired wavelength range is incident on the Fabry-Perot interference filter **10** in a state in which the range of the incident angle is made small. Therefore, a resolution improves in the spectroscopic spectrum obtained by the Fabry-Perot interference filter **10**.

Also, in the spectroscopic unit **100**, the first aperture part **71** and the second aperture part **72** are configured so that all the light that has passed through the first aperture **80** and the second aperture **72***a* and transmitted through the bandpass filter **14** is incident on the Fabry-Perot interference filter **10**. According to this, generation of stray light in the housing **2** can be suppressed.

Also, in the spectroscopic unit **100**, the bandpass filter **14** is separated from the first aperture part **71** via the top wall **6**. According to this, since the bandpass filter **14** is disposed in the housing **2**, the bandpass filter **14** can be protected from physical interference or the like.

Also, the spectroscopic module **50** includes the spectroscopic unit **100**, the light source **51**, the housing **2** of the spectroscopic unit **100**, and the package **53** accommodating the light source **51**. The first aperture **80** and the second aperture **72***a* are disposed to be adjacent to the light emitting part **51***a* of the light source **51** along the outer surface of the package **53**. According to this, the reflection-type spectroscopic module **50** in which the spectral accuracy by the Fabry-Perot interference filter **10** is improved can be realized.

Also, in the spectroscopic module **50**, the light incident opening **72***b* of the second aperture **72***a* and the light emitting part **51***a* of the light source **51** are positioned in the recessed part **62**. Thereby, even in a state in which the outer surface **55***a* of the lid **55** is brought into contact with the object, since a region in the recessed part **62** is secured as an optical path, irradiation of the object with light and detection of light reflected by the object can be performed.

Also, in the spectroscopic module **50**, the second aperture **72***a* is formed on the bottom surface **63***a* of the first portion **63** of the recessed part **62**. Thereby, even in a state in which the outer surface **55***a* of the lid **55** is brought into contact with the object, light reflected by the object can be reliably incident on the second aperture **72***a*.

Also, in the spectroscopic module **50**, the hole **67** in which the light source **51** is disposed is formed on the bottom surface **64***a* of the second portion **64** which is deeper than the first portion **63** of the recessed part **62**. Thereby, even in a state in which the outer surface of the lid **55** is brought into contact with the object, light emitted from the light source **51** can be sufficiently irradiated to the object.

Also, in the spectroscopic module **50**, the concave curved surface **62***b* is formed between the bottom surface **64***a* of the second portion **64** and the side surface **62***a* of the recessed part **62**. Thereby, since light reflected by the concave curved surface **62***b* is also irradiated to the object, the light emitted from the light source **51** can be more sufficiently irradiated to the object.

Also, in the spectroscopic module **50**, the hole **67** has a size including the second aperture **72***a* when viewed from the direction A. Thereby, the light emitted from the light source **51** can be irradiated to the object over a wide range.

Modified Example

The present disclosure is not limited to the above-described embodiment. For example, an example in which the first tapered portion **81** and the second tapered portion **82** are in contact with each other has been illustrated, but the first tapered portion **81** and the second tapered portion **82** may be separated from each other. The first tapered portion **81** and the second tapered portion **82** may reach, for example, an intermediate portion formed between the first tapered portion **81** and the second tapered portion **82** in the direction A. A region in the intermediate portion may have, for example, a columnar shape extending in the direction A. Also, an example in which a rate of change in the diameter of the first tapered portion **81** is the same as a rate of change in the diameter of the second tapered portion **82** has been illustrated, but the rate of change in the diameter of the first tapered portion **81** may be different from the rate of change in the diameter of the second tapered portion **82**.

Also, as illustrated in (a) of FIG. **9**, the first aperture **80** may include only the second tapered portion **82**. The second tapered portion **82** may reach both the first surface **71***a* and the second surface **71***b*. In this case, an outer edge of the first aperture **80** is the edge of the light emitting opening **80***c*. According to this, even when the light incident on the second aperture **72***a* at a large incident angle travels in the second aperture **72***a* while being reflected by the inner surface of the second aperture **72***a*, the light is reflected by the inner surface of the second tapered portion **82** toward a side opposite to the inside of the housing **2**. Therefore, according to this, the light incident on the second aperture **72***a* at a large incident angle becoming stray light by being incident into the housing **2** while being reflected by the inner surface of the second aperture **72***a* can be reliably suppressed. Also, as illustrated in (b) of FIG. **9**, the first aperture **80** may include only the first tapered portion **81**. The first tapered portion **81** may reach both the first surface **71***a* and the second surface **71***b*. In this case, an outer edge of the first aperture **80** is the edge of the light incident opening **80***b*. As described above, the first aperture **80** may include at least one of the first tapered portion **81** and the second tapered portion **82**. When the first aperture **80** includes at least one of the first tapered portion **81** and the second tapered portion **82**, at least one of the first tapered portion **81** and the second tapered portion **82** can be easily formed by etching. Also, weight reduction of the first aperture **80** can be achieved.

Also, when the first aperture **80** includes at least one of the first tapered portion **81** and the second tapered portion **82**, even when the first aperture part **71** is disposed in an inclined state (a state in which the center line of the first aperture **80** intersects the line L) with respect to the direction A (the line L), a traveling direction of light incident on the first aperture **80** in the direction A can be maintained. Specifically, as illustrated in (a) of FIG. **10**, when an aperture **720** formed in an aperture part **710** does not include a tapered portion, that is, when an inner surface of the aperture **720** has, for example, a cylindrical shape, if the aperture part **710** is disposed in a state of being inclined with respect to the direction A, light L**3** incident on the aperture **720** in the direction A is reflected by the inner surface of the aperture **720**. As a result, the light L**3** that has been incident in the direction A travels in the aperture **720** while being reflected by the inner surface of the aperture **720**, and then emits from the aperture **720** in a direction intersecting the direction A.

On the other hand, as illustrated in (b) of FIG. **10**, when the first aperture **80** includes the first tapered portion **81** and the second tapered portion **82**, even if the first aperture part **71** is disposed in a state of being inclined with respect to the direction A, the light L**3** incident on the first aperture **80** in the direction A travels in the first aperture **80** in the direction A without being reflected by the inner surface of the first tapered portion **81** or the second tapered portion **82**, and then emits from the first aperture **80** in the direction A. Similarly, as illustrated in (c) of FIG. **10**, when the first aperture **80** includes only the first tapered portion **81**, even if the first aperture part **71** is disposed in a state of being inclined with respect to the direction A, the light L**3** incident on the first aperture **80** in the direction A travels in the first aperture **80** in the direction A without being reflected by the inner surface of the first tapered portion **81**, and then emits from the first aperture **80** in the direction A. Similarly, as illustrated in (d) of FIG. **10**, when the first aperture **80** includes only the second tapered portion **82**, even if the first aperture part **71** is disposed in a state of being inclined with respect to the direction A, the light L**3** incident on the first aperture **80** in the direction A travels in the first aperture **80** in the direction A without being reflected by the inner surface of the second tapered portion **82**, and then emits from the first aperture **80** in the direction A. According to this, the light L**3** incident on the first aperture **80** in the direction A is emitted in the direction A while the accuracy for positioning the first aperture part **71** can be relaxed, and thereby the bandpass filter **14** or the Fabry-Perot interference filter **10** can be made to function appropriately.

Such a point is especially important when a width (for example, diameter) of an outer edge of the aperture is small. That is, when a width of the outer edge of the aperture is small, an amount of light passing through the aperture (here, light traveling in the direction A) tends to be small. Therefore, in order to secure an amount of light passing through the aperture, it is important not to reduce the amount of light traveling in the direction A. Also, as the width of the outer edge of the aperture becomes smaller, when the aperture part is slightly inclined with respect to the direction A (for example, see (a) of FIG. **10**), the light incident on the aperture in the direction A becomes to be easily reflected by the inner surface of the aperture. According to the first aperture part **71**, as described above, even if the first aperture part **71** is disposed in a state of being inclined with respect to the direction A, a traveling direction of the light incident on the first aperture **80** in the direction A can be maintained. Therefore, decrease in the amount of light passing through the aperture in the direction A can be suppressed. Further, for convenience of illustration, dimensional ratios and the like are different between the first aperture part **71** and the Fabry-Perot interference filter **10** illustrated in (a) to (d) of FIG. **10** and the first aperture part **71** and the Fabry-Perot interference filter **10** illustrated in other drawings.

Also, when viewed from the direction A, the outer edge of the second aperture **72***a* may be positioned outside the outer edge of the light transmission region **10***a* of the Fabry-Perot interference filter **10** or the outer edge of the opening **2***a*. In that case, a sufficient amount of light entering inside the housing **2** can be secured.

Also, the first aperture part **71** may be integrally formed with the housing **2**. In this case, a part of the top wall **6** of the cap **4** functions as the first aperture part **71**, and the first aperture **80** is formed in the top wall **6** to communicate with the opening **2***a*. When the first aperture part **71** is integrally formed with the housing **2**, deviation in positional relationship between the first aperture **80** and the Fabry-Perot interference filter **10** due to vibration or the like can be prevented from occurring with a simple configuration.

Also, an example in which the first aperture part **71** is in contact with the top wall **6** has been illustrated, but the first aperture part **71** may be separated from the top wall **6**. Also, the first aperture part **71** may be in contact with the second aperture part **72**. Also, the first aperture part **71** may be integrally formed with the second aperture part **72**. In this case, a part of the lid **55** functions as the first aperture part **71**, and the first aperture **80** is formed on the lid **55** to communicate with the second aperture **72***a*. When the first aperture part **71** is integrally formed with the second aperture part **72**, deviation in positional relationship between the first aperture **80** and the second aperture **72***a* due to vibration or the like can be prevented from occurring with a simple configuration.

Also, the second aperture part **72** may be the second aperture member formed separately from the lid **55**. In this case, a degree of freedom in designing the second aperture part **72** such as selection of a suitable material can be improved. Also, a positional relationship between the second aperture **72***a* and the first aperture **80** or the Fabry-Perot interference filter **10** can be more easily adjusted.

Also, the reflection-type spectroscopic module **50** described above can perform irradiation of the object with light and detection of light reflected by the object even in a state in which the outer surface of the lid **55** is separated from the object without bringing the outer surface **55***a* of the lid **55** into contact with the object. Also, the spectroscopic unit **100** may also be applied to a transmission-type spectroscopic module **50** that detects light emitted from the light source **51** and transmitted through the object. Also, the spectroscopic unit **100** may not include the photodetector **8**, and light transmitted through the Fabry-Perot interference filter **10** may be detected by the photodetector **8** disposed outside the housing **2**.

REFERENCE SIGNS LIST

1 Photodetection device
2 Housing
2*a* Opening
6 Top wall (wall part)
8 Photodetector
10 Fabry-Perot interference filter
10*a* Light transmission region
35 First mirror part
36 Second mirror part
50 Spectroscopic module
51 Light source
51*a* Light emitting part
53 Package
55*a* Outer surface
71 First aperture part
71*a* First surface
71*b* Second surface
72 Second aperture part
72*a* Second aperture
80 First aperture
80*d* Outer edge
81 First tapered portion
82 Second tapered portion
100 Spectroscopic unit
A Direction (facing direction)
T**1**, T**2** Length

The invention claimed is:

1. A spectroscopic unit comprising:

a Fabry-Perot interference filter including a first mirror part and a second mirror part in which a distance therebetween is variable;

a housing including a wall part that extends along a direction intersecting a facing direction of the first mirror part and the second mirror part, the wall part formed with an opening facing the Fabry-Perot interference filter in the facing direction of the first mirror part and the second mirror part, wherein the opening is a through hole penetrating the wall part and the opening is a light passage, the housing accommodating the Fabry-Perot interference filter;

a first aperture part provided on a side opposite to the Fabry-Perot interference filter with respect to the wall part and formed with a first aperture facing the opening in the facing direction; and

a second aperture part provided on a side opposite to the wall part with respect to the first aperture part and formed with a second aperture facing the first aperture in the facing direction, wherein

a length of the second aperture in the facing direction is larger than a length of the first aperture in the facing direction,

an outer edge of the first aperture is positioned inside each of an outer edge of the opening and an outer edge of the second aperture when viewed from the facing direction, and

the first aperture includes at least one of a first tapered portion reaching a first surface of the first aperture part on the wall part side and extending toward the first surface, and a second tapered portion reaching a second surface of the first aperture part on the second aperture part side and extending toward the second surface.

2. The spectroscopic unit according to claim 1, wherein the first aperture includes both the first tapered portion and the second tapered portion.

3. The spectroscopic unit according to claim 1, wherein

the first aperture includes only the second tapered portion, and

the second tapered portion reaches both the first surface and the second surface.

4. The spectroscopic unit according to claim 1, wherein the outer edge of the first aperture is positioned inside an outer edge of a light transmission region of the Fabry-Perot interference filter when viewed from the facing direction.

5. The spectroscopic unit according to claim 1, wherein the outer edge of the opening is positioned outside the outer edge of the second aperture when viewed from the facing direction.

6. The spectroscopic unit according claim 1, wherein the first aperture is an opening formed by etching.

7. The spectroscopic unit according to claim 1, wherein the first aperture part is a first aperture member formed separately from the wall part and is provided on a surface of the wall part.

8. The spectroscopic unit according to claim 7, wherein the first aperture part is fixed to the wall part.

9. The spectroscopic unit according to claim 1, wherein the second aperture part is a second aperture member formed separately from the first aperture part.

10. The spectroscopic unit according to claim 1, wherein

a cross-sectional shape of the first aperture in a direction perpendicular to the facing direction is circular, and

a cross-sectional shape of the second aperture in the direction perpendicular to the facing direction is circular.

11. The spectroscopic unit according to claim 1, wherein

a region in the first aperture is a space, and

a region in the second aperture is a space.

12. The spectroscopic unit according to claim 1, further comprising a photodetector disposed in the housing and configured to detect light transmitted through the Fabry-Perot interference filter.

13. The spectroscopic unit according to claim 1, further comprising:

a bandpass filter disposed between the first aperture and the Fabry-Perot interference filter, wherein

the first aperture part and the second aperture part are configured so that all light which has passed through the first aperture and the second aperture is incident on the bandpass filter.

14. The spectroscopic unit according to claim 13, wherein the first aperture part and the second aperture part are configured so that all the light which has passed through the first aperture and the second aperture and transmitted through the bandpass filter is incident on the Fabry-Perot interference filter.

15. The spectroscopic unit according to claim 13, wherein the bandpass filter is separated from the first aperture part via the wall part.

16. A spectroscopic module comprising:

the spectroscopic unit according to claim 1;

a light source; and

a package accommodating the housing of the spectroscopic unit and the light source, wherein

the first aperture and the second aperture are disposed to be adjacent to a light emitting part of the light source along an outer surface of the package.

17. A spectroscopic unit comprising:

a Fabry-Perot interference filter including a first mirror part and a second mirror part in which a distance therebetween is variable;

a housing including a wall part that extends along a direction intersecting a facing direction of the first mirror part and the second mirror part, the wall part formed with an opening facing the Fabry-Perot interference filter in the facing direction of the first mirror part and the second mirror part, wherein the opening is a through hole penetrating the wall part and the opening is a light passage, the housing accommodating the Fabry-Perot interference filter;

a first aperture part formed with a first aperture facing the opening in the facing direction; and

a second aperture part provided on a side opposite to the wall part with respect to the first aperture part and formed with a second aperture facing the first aperture in the facing direction, wherein

a length of the second aperture in the facing direction is larger than a length of the first aperture in the facing direction,

an outer edge of the first aperture is positioned inside each of an outer edge of the opening and an outer edge of the second aperture when viewed from the facing direction, and

the first aperture includes at least one of a first tapered portion reaching a first surface of the first aperture part on the wall part side and extending toward the first surface, and a second tapered portion reaching a second

surface of the first aperture part on the second aperture part side and extending toward the second surface.

* * * * *