US012384233B1

(12) **United States Patent**
Mordukhovich et al.

(10) **Patent No.: US 12,384,233 B1**
(45) **Date of Patent: Aug. 12, 2025**

(54) **DIFFERENTIAL FOR ELECTRIC DRIVE MODULE WITH DUAL COAXIAL MOTORS AND CLUTCH DISCONNECT**

(71) Applicant: **FCA US LLC**, Auburn Hills, MI (US)

(72) Inventors: **Gregory Mordukhovich**, Auburn Hills, MI (US); **Marco Vassallo**, Turin (IT)

(73) Assignee: **FCA US LLC**, Auburn Hills, MI (US)

(*) Notice: Subject to any disclaimer, the term of this patent is extended or adjusted under 35 U.S.C. 154(b) by 0 days.

(21) Appl. No.: **18/819,648**

(22) Filed: **Aug. 29, 2024**

(51) **Int. Cl.**

B60K 17/16	(2006.01)
B60K 1/02	(2006.01)
B60K 17/04	(2006.01)
F16H 37/08	(2006.01)
F16H 59/14	(2006.01)
F16H 59/58	(2006.01)
F16H 61/28	(2006.01)
F16H 61/30	(2006.01)
B60K 7/00	(2006.01)
B60K 17/348	(2006.01)

(52) **U.S. Cl.**
CPC ***B60K 1/02*** (2013.01); ***B60K 17/043*** (2013.01); ***B60K 17/165*** (2013.01); ***F16H 37/0806*** (2013.01); ***F16H 59/14*** (2013.01); ***F16H 59/58*** (2013.01); ***F16H 61/2807*** (2013.01); ***F16H 61/30*** (2013.01); *B60K 7/0007* (2013.01); *B60K 2007/0092* (2013.01); *B60K 17/348* (2013.01)

(58) **Field of Classification Search**
CPC B60K 1/02; B60K 17/043; B60K 17/165; B60K 7/0007; B60K 17/348; B60K 2007/0092; F16H 37/0806; F16H 59/14; F16H 59/58; F16H 61/2807; F16H 61/30
See application file for complete search history.

(56) **References Cited**

U.S. PATENT DOCUMENTS

11,780,328	B2 *	10/2023	Seemann	B60K 17/046 180/65.7
2023/0311628	A1 *	10/2023	Raeder	B60K 1/02 475/198
2024/0109425	A1 *	4/2024	Brolles	B60K 17/22

FOREIGN PATENT DOCUMENTS

CN	105966223	A *	9/2016	
CN	106945496	A *	7/2017	B60K 1/02
CN	207931390	U *	10/2018	B60B 35/125
CN	112277611	A *	1/2021	
CN	217730192	U *	11/2022	
CN	115435069	A *	12/2022	B60K 1/00

* cited by examiner

Primary Examiner — Justin Holmes
(74) *Attorney, Agent, or Firm* — Jeremy J. Klobucar

(57) **ABSTRACT**

An electrified powertrain that generates and transfers drive torque to a driveline of an electrified vehicle is provided. The electrified powertrain includes an electric drive module (EDM), and a controller. The EDM includes a first electric motor having a first output drivingly coupled to a first output shaft that drives a first drive wheel; a second electric motor having a second output selectively coupled to a second output shaft; and a clutch. The first output is coupled to the first output shaft through a differential. The second output is coupled to the second output shaft through the differential. The clutch moves between a first position that decouples the second electric motor from the second output shaft; and a second position that couples the second electric motor to the second output shaft.

9 Claims, 5 Drawing Sheets

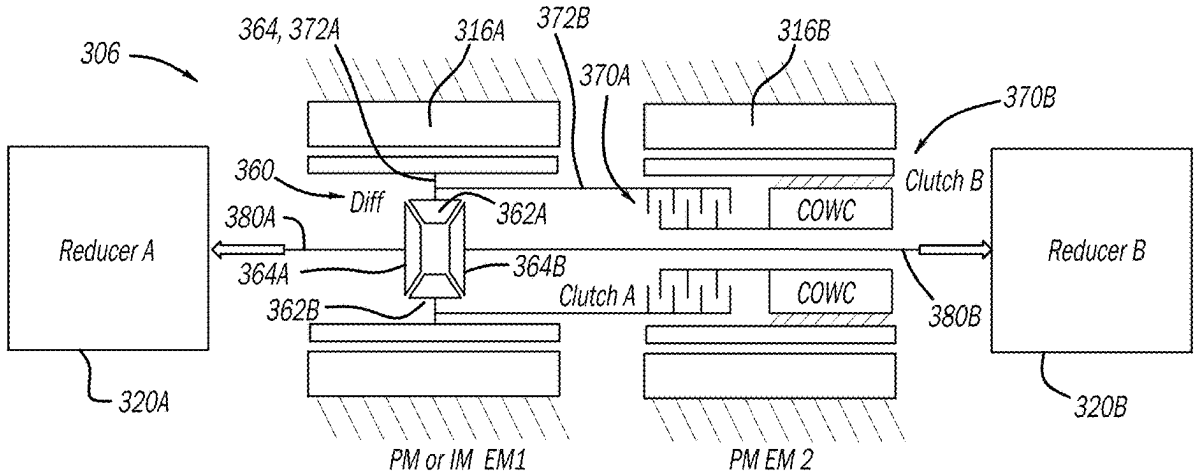

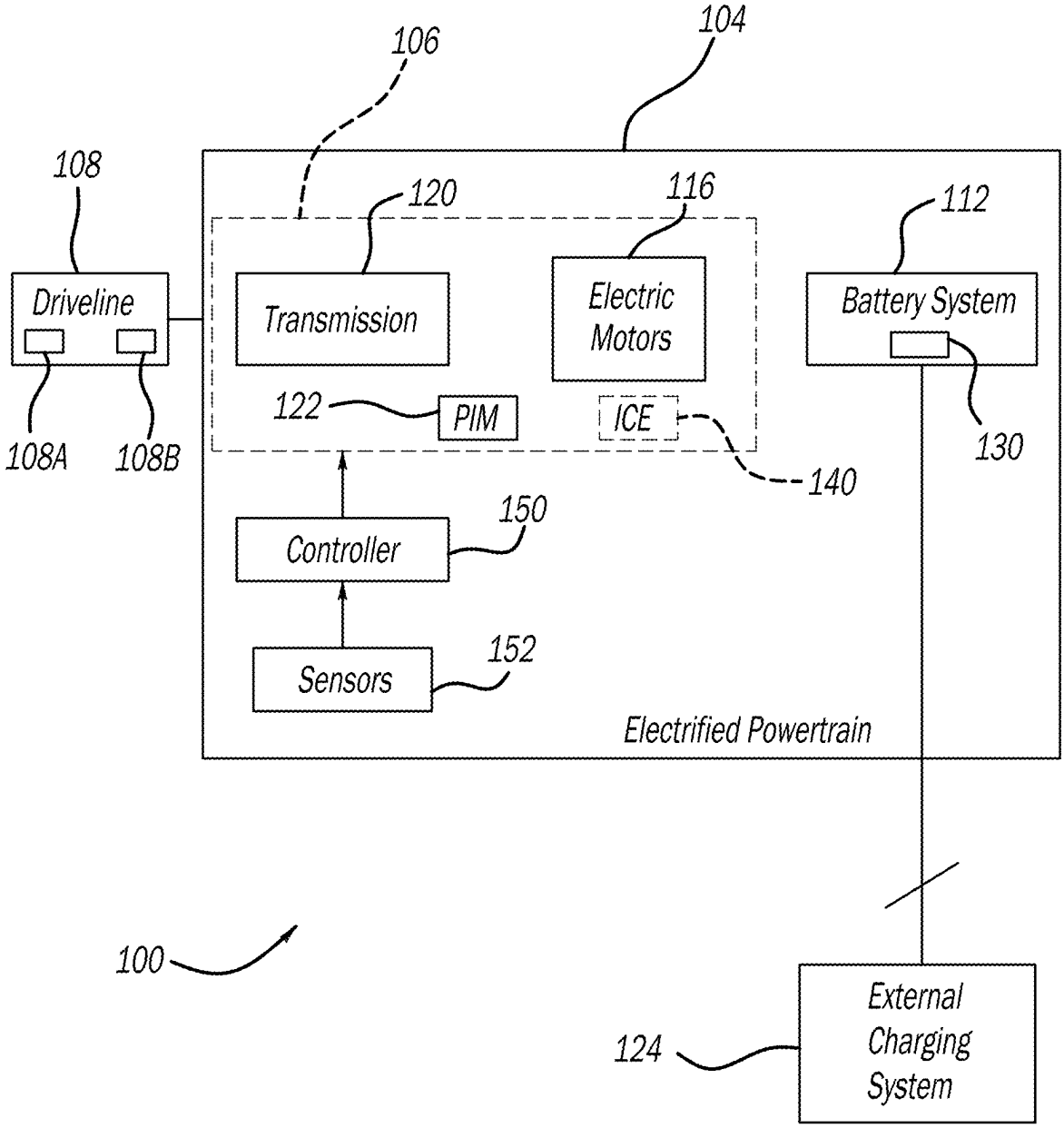
104
106
108
120
116
112
Driveline
Transmission
Electric Motors
Battery System
122
PIM
ICE
108A
108B
130
140
150
Controller
152
Sensors
Electrified Powertrain
100
External Charging System
124

FIG. 1

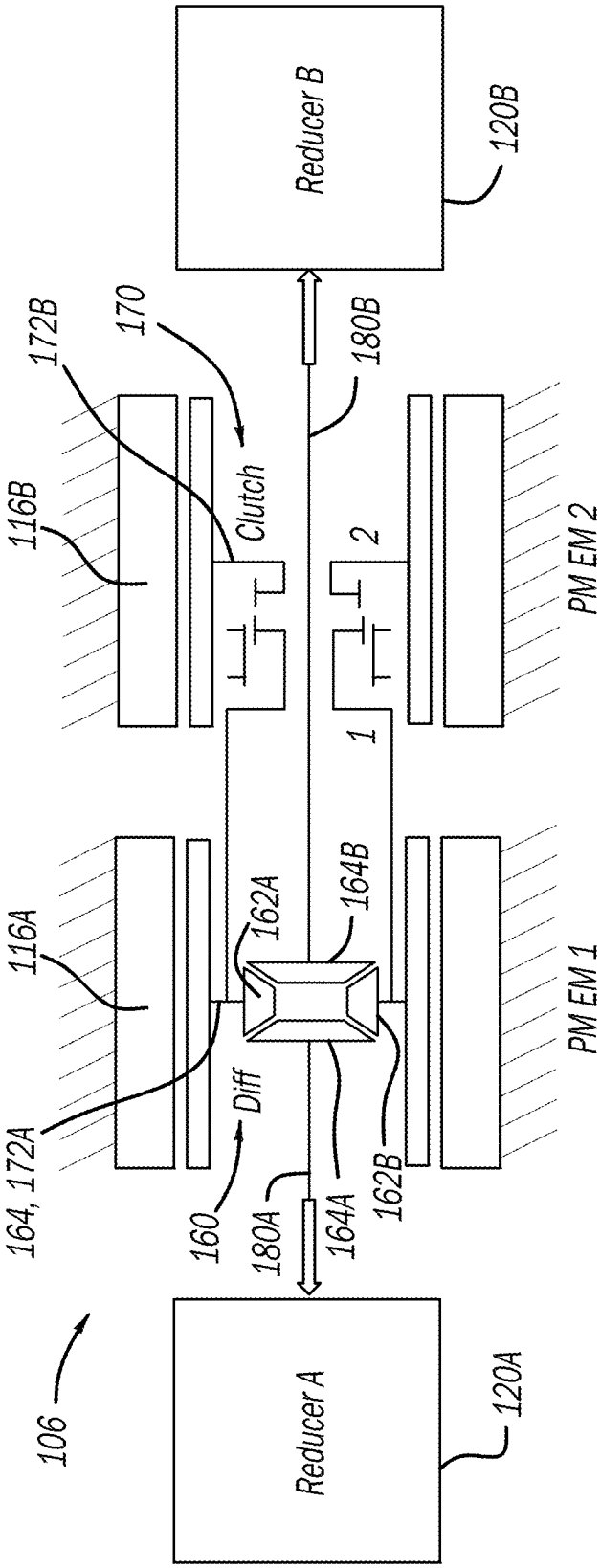

FIG. 2A

190

	E-Motors		Clutch	
	EM1 (PM or IM)	EM2 (IM)	Position 1	Position 2
Launch/Max Power/City Cycle	X	X		X
Highway Cycle	X	X	X	

FIG. 2B

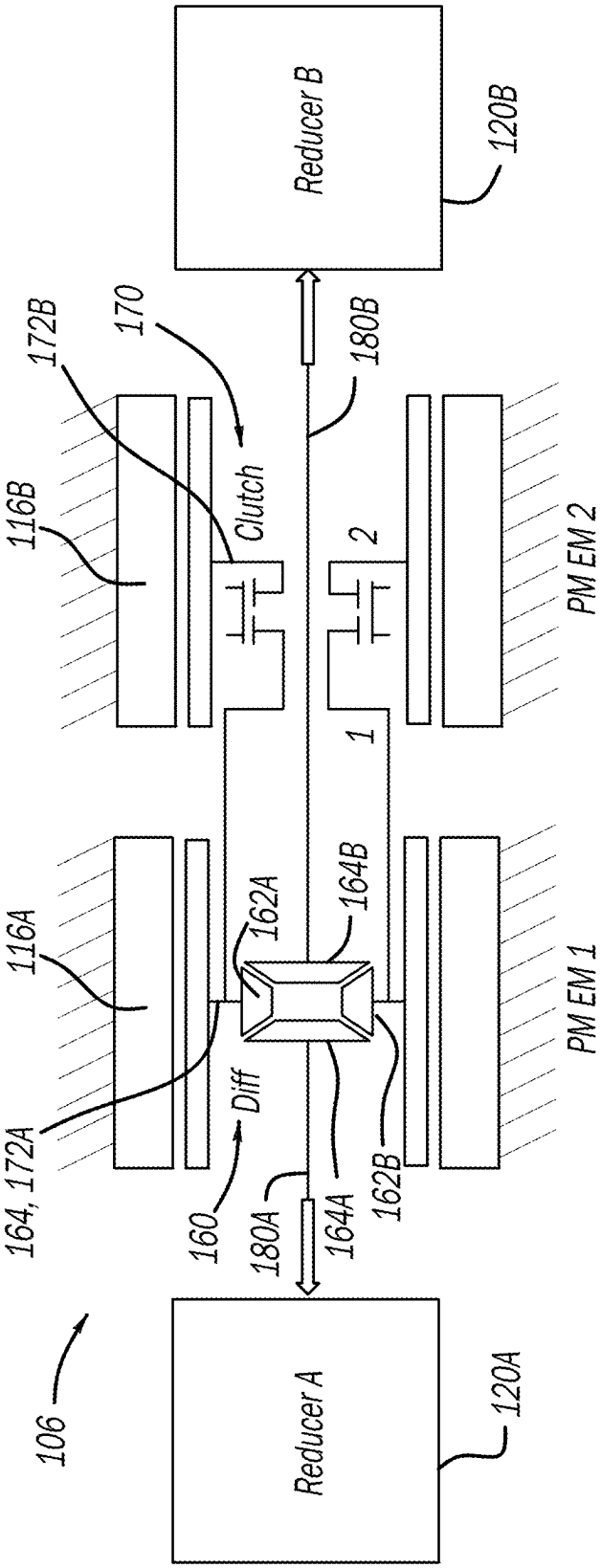

FIG. 3A

190

	E-Motors		Clutch	
	EM1 (PM or IM)	EM2 (IM)	Position 1	Position 2
Launch/Max Power/City Cycle	X	X		X
Highway Cycle	X	X	X	

FIG. 3B

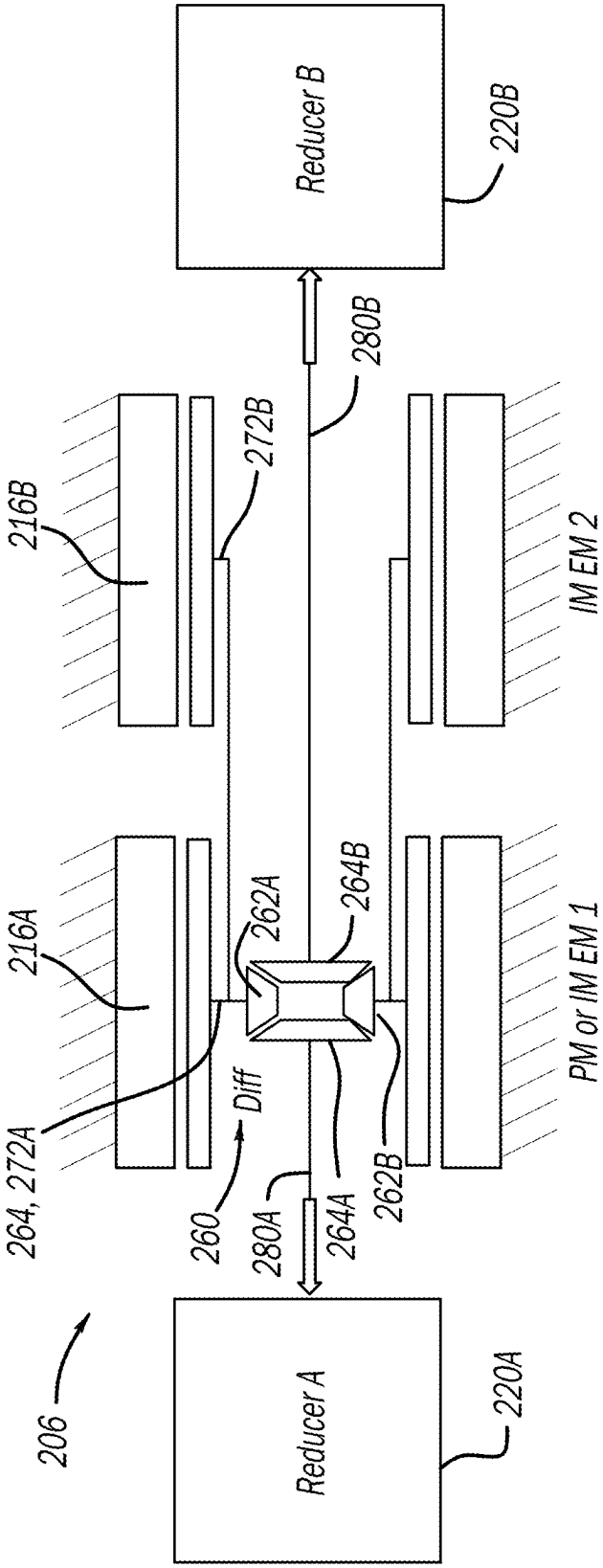

FIG. 4A

290

	E-Motors	
	EM1 (PM or IM)	EM1 (IM)
Launch/Max Power/City Cycle	X	X
Highway Cycle	X	

FIG. 4B

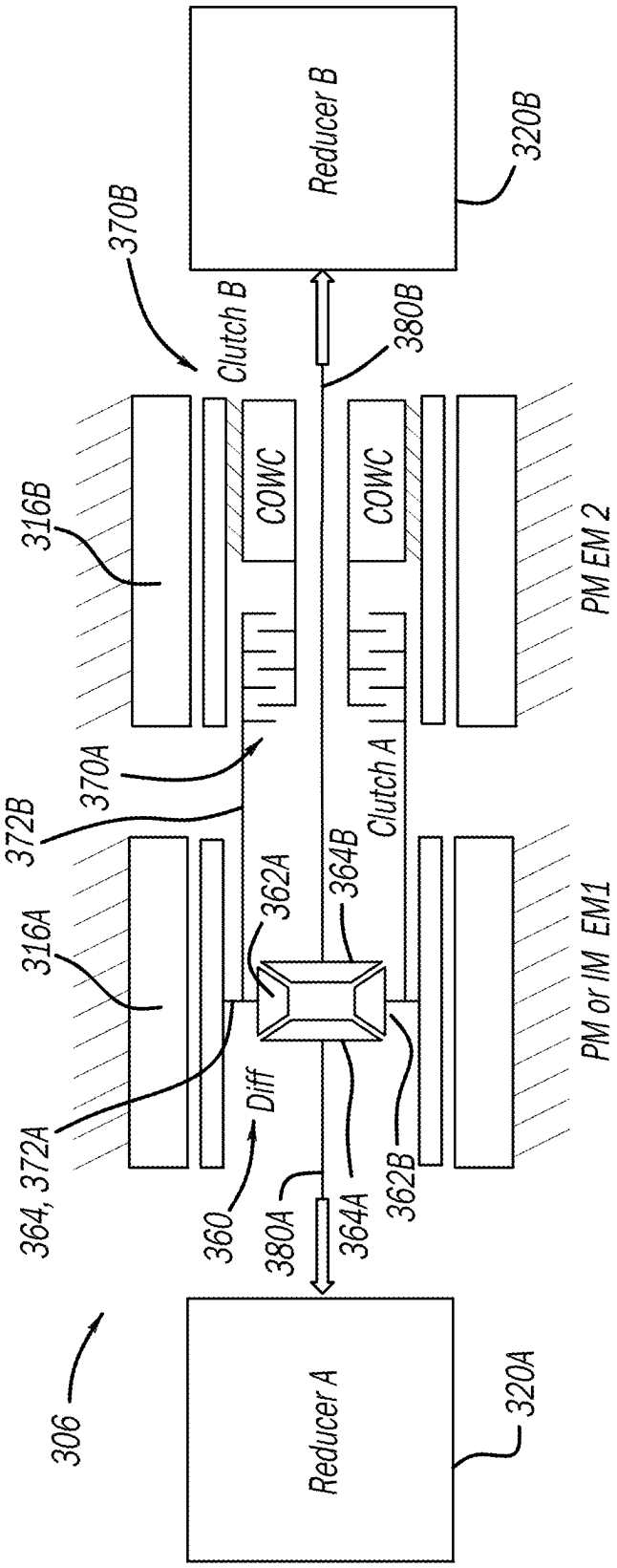

FIG. 5A

390

	E-Motors		Clutch A (EM or HEM)		Clutch B (COWC)	
	EM1 (PM or IM)	EM2 (IM)	Open	Closed (Default)	Locked (Default)	Free Rolling
Launch/Max Power/City Cycle	X	X		X	X	
Highway Cycle	X		X			X

FIG. 5B

DIFFERENTIAL FOR ELECTRIC DRIVE MODULE WITH DUAL COAXIAL MOTORS AND CLUTCH DISCONNECT

FIELD

The present application generally relates to electrified vehicles and, more particularly, to a differential for an electric drive module having dual coaxial electric motors, a differential and a clutch for selectively disconnecting at least one of the electric motors based on operating conditions.

BACKGROUND

An electrified vehicle (hybrid electric, plug-in hybrid electric, range-extended electric, battery electric, etc.) includes at least one battery system and at least one electronic drive module having at least one electric motor and associated electric drive gearbox assembly. Typically, the electrified vehicle would include a high voltage battery system and a low voltage (e.g., 12 volt) battery system. In such a configuration, the high voltage battery system is utilized to power at least one electric motor configured on the vehicle and to recharge the low voltage battery system via a direct current to direct current (DC-DC) convertor. The electric drive gearbox assembly can be configured in many ways to achieve various gear ratios for accessing during specific drive conditions. In some dual motor examples however it can be inefficient operating both motors concurrently providing more power and torque than is needed. Accordingly, while such electronic drive modules do work well for their intended purpose, there is a desire for improvement in the relevant art.

SUMMARY

According to one example aspect of the invention, an electrified powertrain that generates and transfers drive torque to a driveline of an electrified vehicle is provided. The electrified powertrain includes an electric drive module (EDM), and a controller. The EDM includes a first electric motor having a first output coupled to a first output shaft that drives a first drive wheel; a second electric motor having a second output selectively coupled to a second output shaft; and a clutch. The first output is coupled to the first output shaft through a differential. The second output is coupled to the second output shaft through the differential. The clutch moves between a first position that decouples the second electric motor from the second output shaft, wherein in the first position drive torque is provided to the first and second drive wheels exclusively from the first electric motor; and a second position that couples the second electric motor to the second output shaft, wherein in the second position the first and second electric motors drive the first and second drive wheel through the differential. The controller controls operation of the clutch based on operating conditions.

In some implementations, the electrified powertrain includes a first reducer disposed between the first output shaft and the first drive wheel; and a second reducer disposed between the second output shaft and the second drive wheel.

In some implementations, at least one of the first and second electric motors are induction motors.

In some implementations, at least one of the first and second electric motors are permanent magnet motors.

In some implementations, the clutch is a dog clutch.

In additional aspects, the clutch is a one of a multi-plate electromagnetic and hydro-electric magnetic clutch.

In additional features, the clutch collectively comprises a first multi-plate clutch; and a second controllable one way clutch (COWC). In the first position the first clutch is closed and the second clutch is free rolling. In the second position, the first clutch is open and the second clutch is locked.

In examples, the first and second electric motors are coaxially arranged.

In additional features, the controller is configured to command the clutch to operate in the first position based on low torque operating conditions.

In other features, the controller is configured to command the clutch to operate in the second position based on high torque request operating conditions.

In additional aspects, the controller is configured to command the clutch to operate in the second position based on turning torque request operating conditions.

In other features, the electric drive module is operable in a first drive mode wherein only the first electric motor provides drive torque and in a second drive mode wherein both of the first and second electric motors provide drive torque.

According to another example aspect of the invention, an electrified powertrain that generates and transfers drive torque to a driveline of an electrified vehicle is provided. The electrified powertrain includes an electric drive module (EDM) including a first electric motor having a first output drivingly coupled to a first output shaft that drives a first drive wheel; and a second electric motor having a second output selectively coupled to a second output shaft that drives a second drive wheel. The first output is coupled to the first output shaft through a differential. The second output is coupled to the second output shaft through the differential.

In examples, the first and second electric motors are coaxially arranged.

In other features, the electric drive module is operable in a first drive mode wherein only the first electric motor provides drive torque and in a second drive mode wherein both of the first and second electric motors provide drive torque.

Further areas of applicability of the teachings of the present application will become apparent from the detailed description, claims and the drawings provided hereinafter, wherein like reference numerals refer to like features throughout the several views of the drawings. It should be understood that the detailed description, including disclosed embodiments and drawings referenced therein, are merely exemplary in nature intended for purposes of illustration only and are not intended to limit the scope of the present disclosure, its application or uses. Thus, variations that do not depart from the gist of the present application are intended to be within the scope of the present application.

BRIEF DESCRIPTION OF THE DRAWINGS

FIG. **1** is a functional block diagram of an electrified vehicle having an electronic drive module (EDM) according to various principles of the present application;

FIG. **2**A is schematic illustration of an EDM having a differential and a clutch configuration according to a first example of the present application, the clutch shown in a first position;

FIG. **2**B is a table illustrating various operating modes used by the EDM of FIG. **2**A according to various principles of the present application;

FIG. **3**A is schematic illustration of the EDM of FIG. **2** and shown with the clutch in a second position according to the present application;

FIG. **3**B is a table illustrating various operating modes used by the EDM of FIG. **3**A according to various principles of the present application;

FIG. **4**A is schematic illustration of an EDM having a differential configuration according to a second example of the present application;

FIG. **4**B is a table illustrating various operating modes used by the EDM of FIG. **4**A according to various principles of the present application;

FIG. **5**A is schematic illustration of an EDM having a differential, a wet clutch and a one way clutch configuration according to a third example of the present application; and

FIG. **5**B is a table illustrating various operating modes used by the EDM of FIG. **5**A according to various principles of the present application.

DESCRIPTION

As discussed above, in some EDM's having dual motors, it can be inefficient operating both motors concurrently providing more power and torque than is needed. In particular, in some prior art dual motor configurations, both motors provide all power and torque during full driving cycles and are on all the time regardless of the required power and torque. For example, during high speed highway driving where only low torque is necessary, operating both electric motors is inefficient.

The instant disclosure provides an EDM that incorporates two coaxial electric motors, a differential and in some examples, one or more clutches. The EDM is configured to operate in two modes for optimal efficiency. In a first configuration, a clutch selectively couples a first electric motor to first and second output shafts through a differential in a first highway drive mode. In a second drive mode, the clutch selectively couples both a first and second electric motor to first and second outputs shafts through a differential in a second launch or maximum power mode. In a second configuration, a first electric motor drives a first output shaft through a differential and a second electric motor drives a second output shaft through the differential. In a first highway drive mode only the first electric motor provides a torque input. In a second launch or maximum power mode, both of the electric motors provide a torque input. In a third configuration, a first and a second clutch connect a differential to a second electric motor. A first electric motor drives a first output shaft through a differential. A second electric motor drives a second output shaft through the differential depending on a state of the first and second clutches. The disclosed configurations all increase efficiency of the EDM requiring reduced time when both the electric motors need to be on such as during turning. Further, decreased battery weight and cost is required. Distances between recharging are further increased.

Referring now to FIG. **1**, a functional block diagram of an example electrified vehicle **100** (also referred to herein as "vehicle **100**") according to the principles of the present application is illustrated. The vehicle **100** includes an electrified powertrain **104** having an electric drive module (EDM) **106** configured to generate and transfer drive torque to a driveline **108** for vehicle propulsion. The EDM **106** generally includes two electric motors, collectively identified at **116** (e.g., electric traction motors), an electric drive gearbox assembly or transmission, collectively identified at **120**, and power electronics including a power inverter module (PIM) **122**.

The electric motors **116** are selectively connectable via the PIM **124** to a high voltage battery system **112** for powering the electric motors **116**. The battery system **112** is selectively connectable (e.g., by the driver) to an external charging system **124** (also referred to herein as "charger **124**") for charging of the battery system **112**. The battery system **112** includes at least one battery pack assembly **130**. In some examples, described herein, the electrified powertrain **104** can be a hybrid powertrain that additionally includes an internal combustion engine **140**. A controller **150** can provide various inputs to the EDM **106**, based on signals received from sensors **152** to operate the EDM in various modes based on operating conditions as described herein.

With additional reference now to FIGS. **2**A and **2**B, an EDM **106** constructed in accordance to a first example of the present disclosure will be described. The EDM **106** includes a first electric motor **116**A, a second electric motor **116**B, a differential **160** and a clutch **170**. The differential **160** can include planet gears **162**A, **162**B rotatably coupled to a carrier **164**. The planet gears **162**A, **162**B are meshed for rotation with output gears **164**A, **164**B. In the example shown the planet gear **162**A drives the output shaft **180**A while the planet gear **162**B drives the output shaft **180**B.

The clutch **170** can be a dog clutch or other clutch configuration. As will become appreciated, the dog clutch **170** operates with two on positions of engagement. The first and second electric motors **116**A and **116**B selectively communicate drive torque to reducers **120**A and **120**B that are respectively coupled to the driveline **108** for driving first and second drive axles/wheels **108**A, **108**B. The EDM **106** includes a first output shaft **180**A drivingly coupled to a first output **172**A of the first electric motor **116**A and a second output shaft **180**B selectively coupled to a second output **172**B of the second electric motor **116**B. The clutch **170** further selectively connects the first and second output shafts **180**A, **180**B through the differential **160**.

As shown in the Table **190** of FIG. **2**B, the EDM **106** can be operated in various modes by actuating the clutch **170** between a first position and a second position. In examples, the clutch **170** can be commanded to actuate based on a signal from the controller **150**. In the first position (FIG. **2**A), the clutch **170** decouples the second electric motor **116**B from the second output shaft **180**B and couples the first and second output shafts **180**A and **180**B to each other through the differential **160**. In this first position, the first electric motor **116**A exclusively provides torque input through the differential **160** and through the reducers **120**A, **120**B to the driveline **108**.

As identified above, the first position can be used when full torque is not necessary, such as, but not limited to highway driving. In this first position, only the first electric motor **116**A is on. The second electric motor **116**B can be turned off saving power and running the EDM **106** more efficiently. In the second position (FIG. **3**A), the clutch **170** couples the second electric motor **116**B to the first output **172**A. The controller **150** activates the clutch **170** when speed synchronization between the first and second electric motors **116**A, **116**B is acceptable (e.g., based on inputs from sensors **152** such as wheel speeds and other inputs) for noise vibration and harshness (NVH). In other examples, an additional disconnect clutch can be added to the first electric motor **116**A or reducer **120**A for sailing and towing capabilities if a permanent magnet (PM) is used for the first

electric motor **116**A. In other examples, a lock-up and/or limited slip clutch can be added based on vehicle application. Operation of the electric motor **116**B is not necessary for turning.

In the second position (FIG. **3**A), the first and second electric motors **116**A, **116**B drive the first output shaft **180**A, and the second output shaft **180**B through the differential **160**. In this regard, the output gear **164**A drives the first output shaft **180**A, the first reducer **120**A and the first drive axle/wheel **108**A. Similarly, the output gear **164**B drives the second output shaft **180**B, the second reducer **120**B and the second drive axle/wheel **108**B. In the second position, both the first and second electric motors **116**A, **116**B provide torque input through the differential to the first and second output shafts **180**A, **180**B.

With additional reference now to FIGS. **4**A and **4**B, an EDM **206** constructed in accordance to a second example of the present disclosure will be described. The EDM **206** includes a first electric motor **216**A, a second electric motor **216**B and a differential **260**. The differential **260** can include planet gears **262**A, **262**B rotatably coupled to a carrier **264**. The planet gears **262**A, **262**B are meshed for rotation with output gears **264**A, **264**B. In the example shown the planet gear **262**A drives the output shaft **280**A while the planet gear **262**B drives the output shaft **280**B.

The first and second electric motors **216**A and **216**B selectively communicate drive torque to reducers **220**A and **220**B that are respectively coupled to the driveline **208** for driving first and second drive axles/wheels (see reference **108**A, **108**B, FIG. **1**). The EDM **206** includes a first output shaft **280**A drivingly coupled, through the differential **260**, to a first output **272**A of the first electric motor **216**A and a second output shaft **280**B drivingly coupled, through the differential **260**, to a second output **272**B of the second electric motor **216**B.

In advantages, only the first electric motor **216**A is on during highway cycle. In a launch or maximum power mode, both of the first and second electric motors **216**A, **216**B provide a torque input. In other examples, an additional disconnect clutch can be added to the first electric motor **216**A or reducer **220**A for sailing and towing capabilities if a permanent magnet (PM) is used for the first electric motor **216**A. In other examples, a lock-up and/or limited slip clutch can be added based on vehicle application. Operation of the electric motor **216**B is not necessary for turning.

With additional reference now to FIGS. **5**A and **5**B, an EDM **306** constructed in accordance to a third example of the present disclosure will be described. The EDM **306** includes a first electric motor **316**A, a second electric motor **316**B, a differential **360**, a first clutch **370**A and a second clutch **370**B. The first clutch **370**A can be a multi-plate electromagnetic or hydro-electric magnetic clutch or other clutch configuration. The second clutch **370**B can be a controllable one way clutch (COWC) or other configuration.

The first and second electric motors **316**A and **316**B selectively communicate drive torque to reducers **320**A and **320**B that are respectively coupled to the driveline for driving first and second drive axles (see axles **108**A, **108**B). The EDM **306** includes a first output shaft **380**A drivingly coupled to a first output **372**A of the first electric motor **416**A through the differential **360**. The EDM further includes a second output shaft **480**B selectively coupled to a second output **372**B of the second electric motor **316**B through the differential **360** based on a status of clutches **370**A, **370**B. The clutches **370**A, **370**B cooperate to further selectively connect the second electric motor **316**B to the second output **372**B.

As shown in the Table **390** of FIG. **5**B, the EDM **306** can be operated in various modes by actuating the clutches **370**A, **370**B between a first position and a second position. In examples, the clutches **370**A, **370**B can be commanded to actuate based on a signal from the controller **150**. In a first driving condition suitable for highway cycle, clutch **370**A is open and clutch **370**B is free rolling. During highway cycle, the first electric motor **316**A provides a torque input.

As identified above, the first position can be used when full torque is not necessary, such as, but not limited to highway driving. In this first position, the second electric motor **316**B can be turned off saving power and running the EDM **306** more efficiently. The second driving condition is suitable for launch or maximum power situations. In the second driving condition, the clutch **370**A is closed and the clutch **270**B is locked. During launch or maximum power situations, both of the first and second electric motors **316**A, **316**B provide a torque input. In other examples, an additional disconnect clutch can be added to the first electric motor **316**A or reducer **320**A for sailing and towing capabilities if a permanent magnet (PM) is used for the first electric motor **316**A. In other examples, a lock-up and/or limited slip clutch can be added based on vehicle application. Operation of the electric motor **316**B is not necessary for turning.

As used herein, the term controller or module refers to an application specific integrated circuit (ASIC), an electronic circuit, a processor (shared, dedicated, or group) and memory that executes one or more software or firmware programs, a combinational logic circuit, and/or other suitable components that provide the described functionality.

It will be understood that the mixing and matching of features, elements, methodologies, systems and/or functions between various examples may be expressly contemplated herein so that one skilled in the art will appreciate from the present teachings that features, elements, systems and/or functions of one example may be incorporated into another example as appropriate, unless described otherwise above. It will also be understood that the description, including disclosed examples and drawings, is merely exemplary in nature intended for purposes of illustration only and is not intended to limit the scope of the present application, its application or uses. Thus, variations that do not depart from the gist of the present application are intended to be within the scope of the present application.

What is claimed is:

1. An electrified powertrain that generates and transfers drive torque to a driveline of an electrified vehicle, the electrified powertrain comprising:

an electric drive module comprising:

a first electric motor having a first output coupled to a first output shaft that drives a first drive wheel, the first output coupled to the first output shaft through a differential;

a second electric motor having a second output selectively coupled to a second output shaft, the second output coupled to the second output shaft through the differential; and

a clutch having a first multi-plate clutch and a second controllable one way clutch (COWC), wherein the clutch moves between:

a first position that decouples the second electric motor from the second output shaft, wherein in the first position drive torque is provided to the first

and second drive wheels exclusively from the first electric motor, wherein in the first position the first clutch is closed and the second clutch is free rolling; and

a second position that couples the second electric motor to the second output shaft, wherein in the second position the first and second electric motors drive the first and second drive wheel through the differential, wherein in the second position the first clutch is open and the second clutch is locked; and

a controller that controls operation of the clutch based on operating conditions.

2. The electrified powertrain of claim **1**, further comprising:

a first reducer disposed between the first output shaft and the first drive wheel; and

a second reducer disposed between the second output shaft and the second drive wheel.

3. The electrified powertrain of claim **1**, wherein at least one of the first and second electric motors are induction motors.

4. The electrified powertrain of claim **1**, wherein at least one of the first and second electric motors are permanent magnet motors.

5. The electrified powertrain of claim **1**, wherein the first and second electric motors are coaxially arranged.

6. The electrified powertrain of claim **1**, wherein the controller is configured to command the clutch to operate in the first position based on first torque operating conditions.

7. The electrified powertrain of claim **6**, wherein the controller is configured to command the clutch to operate in the second position based on second torque request operating conditions.

8. The electrified powertrain of claim **1**, wherein the controller is configured to command the clutch to operate in the second position based on turning torque request operating conditions.

9. The electrified powertrain of claim **1**, wherein the electric drive module is operable in a first drive mode wherein only the first electric motor provides drive torque and in a second drive mode wherein both of the first and second electric motors provide drive torque.

* * * * *