US012401096B2

(12) **United States Patent**
Takahashi et al.

(10) **Patent No.: US 12,401,096 B2**
(45) **Date of Patent: Aug. 26, 2025**

(54) **BATTERY WIRING MODULE**

(71) Applicants: **AUTONETWORKS TECHNOLOGIES, LTD.**, Mie (JP); **SUMITOMO WIRING SYSTEMS, LTD.**, Mie (JP); **SUMITOMO ELECTRIC INDUSTRIES, LTD.**, Osaka (JP); **TOYOTA JIDOSHA KABUSHIKI KAISHA**, Aichi (JP)

(72) Inventors: **Hideo Takahashi**, Osaka (JP); **Yoshinori Ikai**, Osaka (JP); **Hideaki Nakajima**, Osaka (JP); **Yuhei Yamada**, Osaka (JP); **Daiji Yoshito**, Osaka (JP); **Yuki Ohira**, Aichi (JP)

(73) Assignees: **AUTONETWORKS TECHNOLOGIES, LTD.**, Mie (JP); **SUMITOMO WIRING SYSTEMS, LTD.**, Mie (JP); **SUMITOMO ELECTRIC INDUSTRIES, LTD.**, Osaka (JP); **TOYOTA JIDOSHA KABUSHIKI KAISHA**, Aichi (JP)

(*) Notice: Subject to any disclaimer, the term of this patent is extended or adjusted under 35 U.S.C. 154(b) by 722 days.

(21) Appl. No.: **17/722,859**

(22) Filed: **Apr. 18, 2022**

(65) **Prior Publication Data**

US 2022/0344780 A1 Oct. 27, 2022

(30) **Foreign Application Priority Data**

Apr. 22, 2021 (JP) 2021-072443

(51) **Int. Cl.**

H01M 50/507	(2021.01)
H01M 50/298	(2021.01)
H01R 25/16	(2006.01)

(52) **U.S. Cl.**

CPC ***H01M 50/507*** (2021.01); ***H01M 50/298*** (2021.01); ***H01R 25/161*** (2013.01)

(58) **Field of Classification Search**

None

See application file for complete search history.

(56) **References Cited**

U.S. PATENT DOCUMENTS

2014/0158396	A1	6/2014	Nakayama	
2016/0359309	A1	12/2016	Nakayama et al.	
2019/0199018	A1*	6/2019	Tsuchiya	H01R 11/284

FOREIGN PATENT DOCUMENTS

CN	105981198	9/2016
CN	109962181	7/2019

(Continued)

OTHER PUBLICATIONS

Machine Translation of JP2016091822 (Year: 2016).*

(Continued)

Primary Examiner — Wyatt P McConnell

(74) *Attorney, Agent, or Firm* — Greenblum & Bernstein, P.L.C.

(57) **ABSTRACT**

A battery wiring module including: bus bars including a terminating bus bar having an external connection portion; a case accommodating the bus bars; a cover portion mounted on the case to cover the bus bars while including a fixing portion mounted on the case, a large lid portion attached to the fixing portion via a first hinge portion to be rotatable from a first closed end covering the external connection portion and its peripheral region to a first open end exposing the external connection portion and its peripheral region, and a small lid portion attached to the large lid portion via a second hinge portion to be rotatable from a second closed end covering the external connection portion to a second

(Continued)

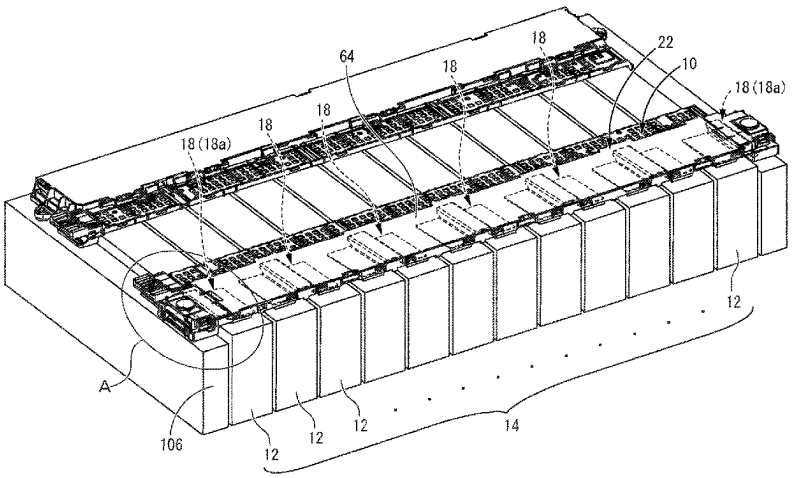

open end exposing the external connection portion; and a retainer to retain the large lid portion at the first open end.

9 Claims, 17 Drawing Sheets

(56) **References Cited**

FOREIGN PATENT DOCUMENTS

JP	2004-119340	4/2004
JP	2007-62745	3/2007
JP	2013-37988	2/2013
JP	2016-91822	5/2016
JP	2019-114392	7/2019
JP	7312518	7/2023

OTHER PUBLICATIONS

Office Action issued in Corresponding JP Patent Application No. 2021-072443, dated Feb. 15, 2023, along with an English translation thereof.
Office Action issued in Corresponding CN Patent Application No. 202210408467.4, dated Aug. 31, 2023, along with an English translation thereof.
Office Action issued in Corresponding JP Patent Application No. 2023-110869, dated May 16, 2025, along with an English translation thereof.

* cited by examiner

FIG.1

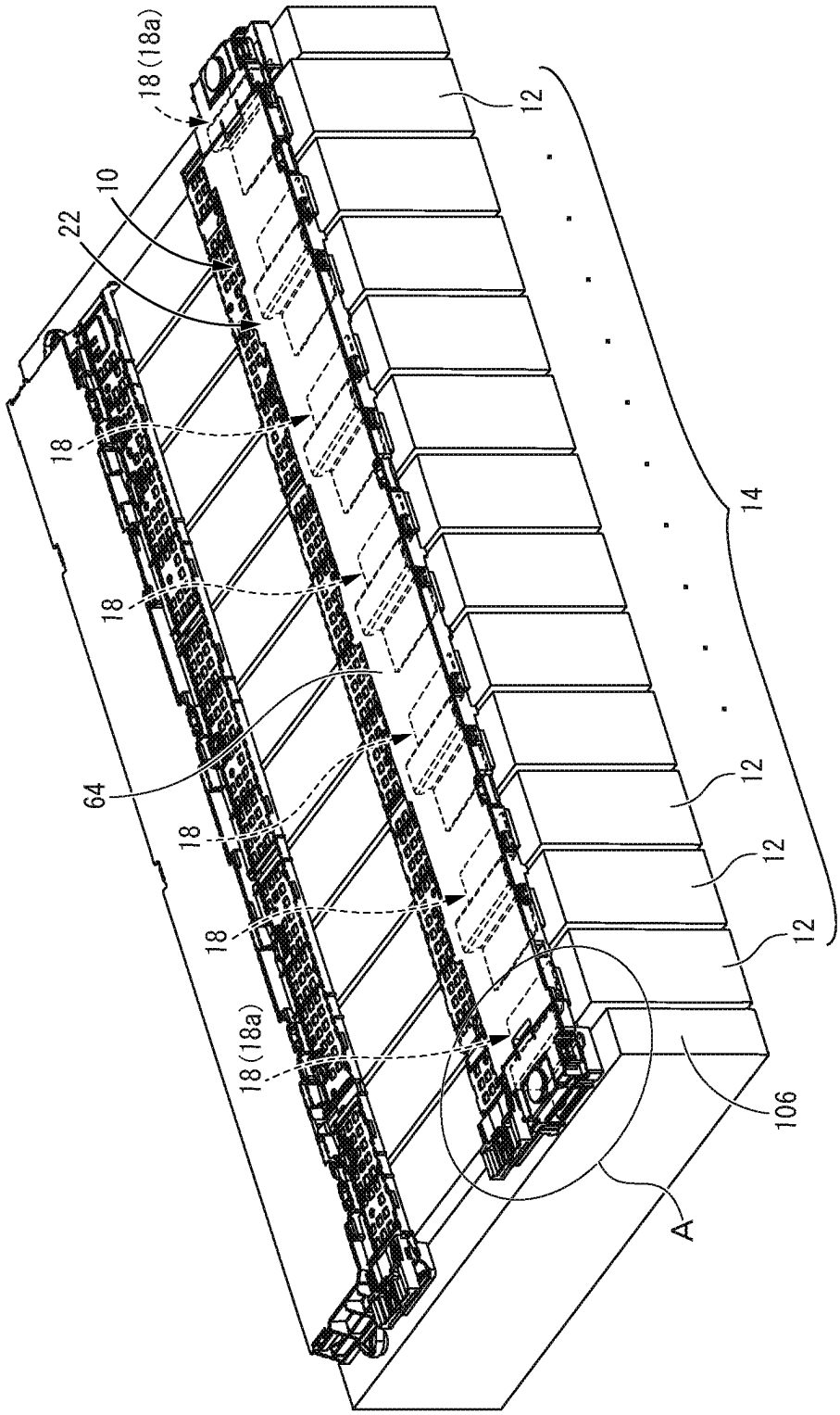

FIG.2

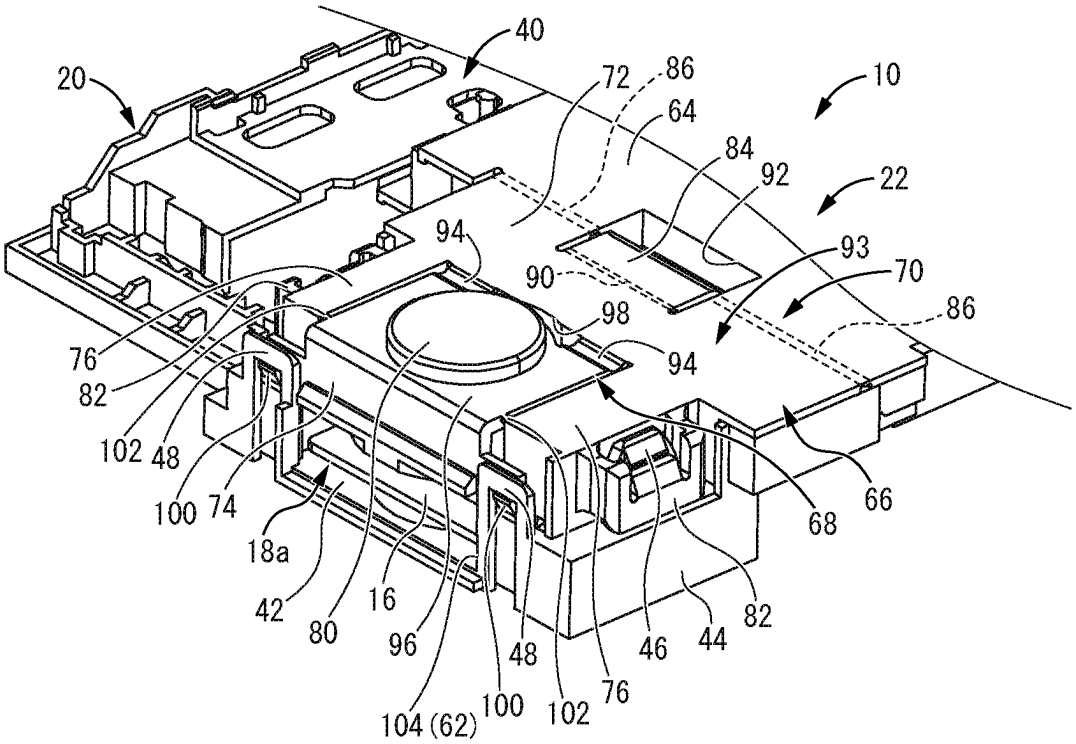
40
20
72
86
64
10
84
92
22
94
93
90
70
98
86
76
94
82
102
48
100
74
18a
42
80
16
96
104 (62)
100
48
102
76
46
44
82
68
66

FIG.3

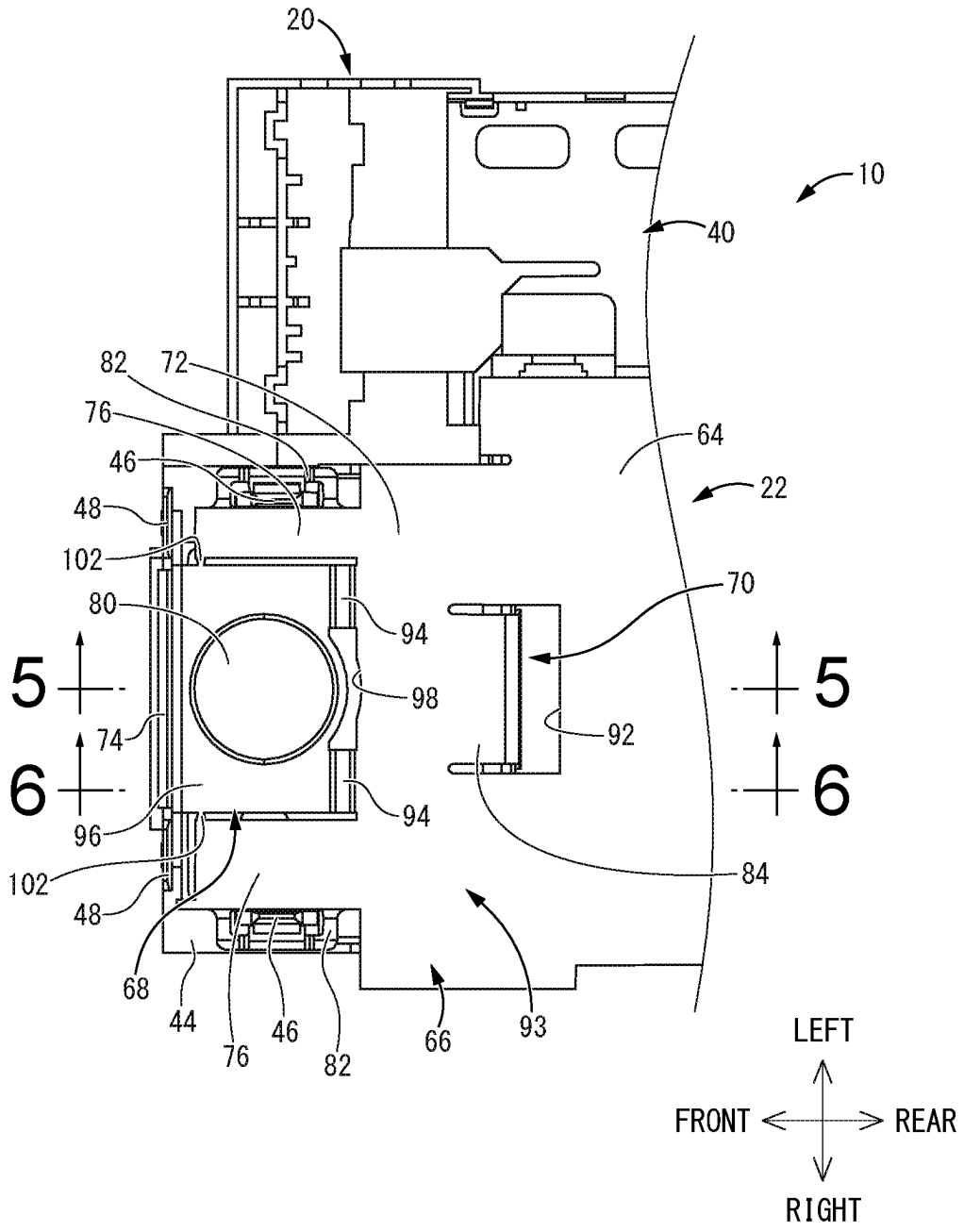
20
10
40
82
72
76
46
64
22
48
102
70
80
94
5
98
5
74
92
6
6
96
94
102
84
48
68
44
76
46
82
66
93
LEFT
FRONT
REAR
RIGHT

FIG.4

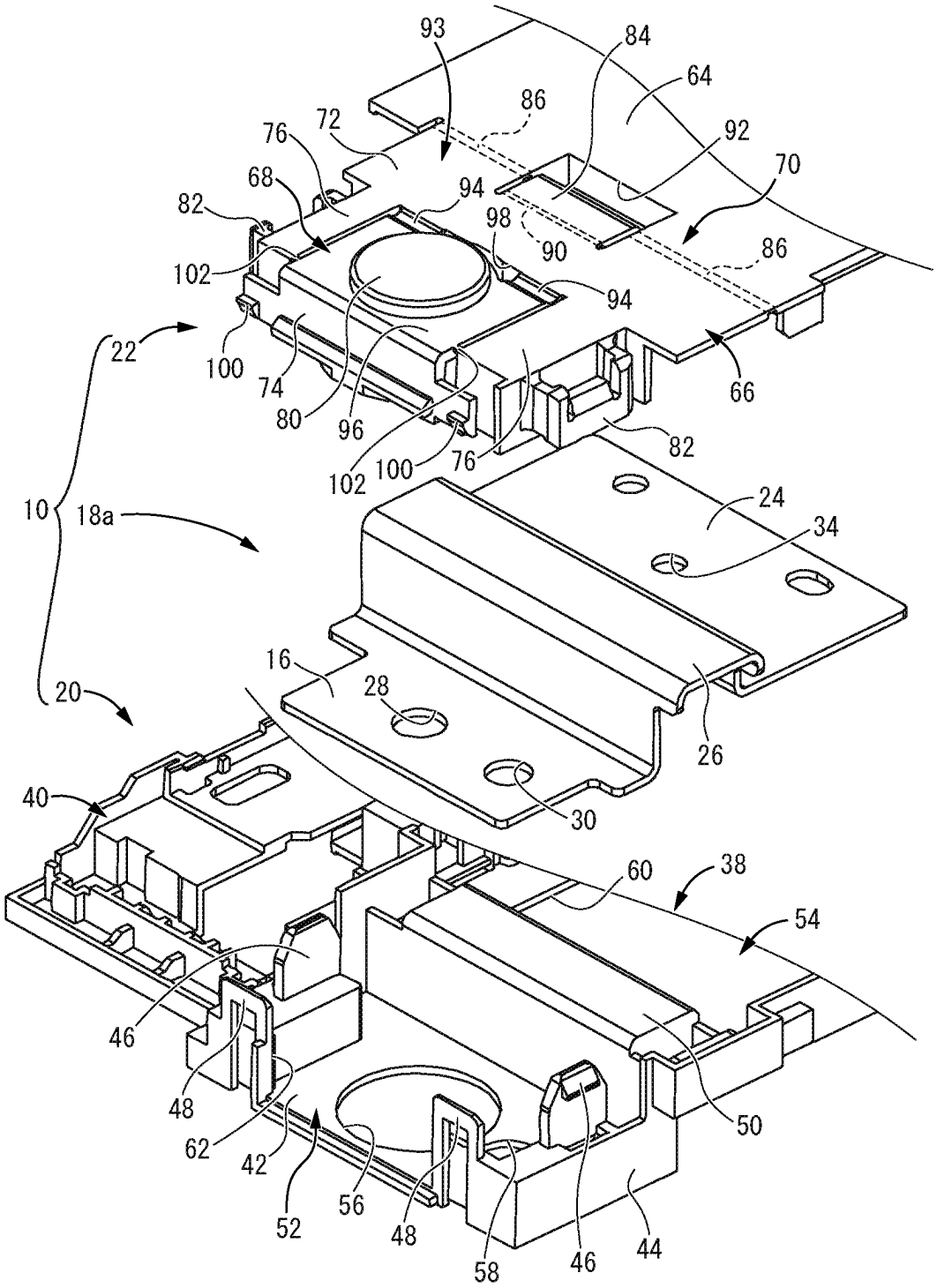
93
84
64
86
72
76
92
70
68
94
82
98
90
86
102
94
22
100
74
80
96
66
102
100
76
82
10
18a
24
34
16
28
20
26
30
40
60
38
54
46
48
62
42
52
56
48
58
46
44
50

FIG.5

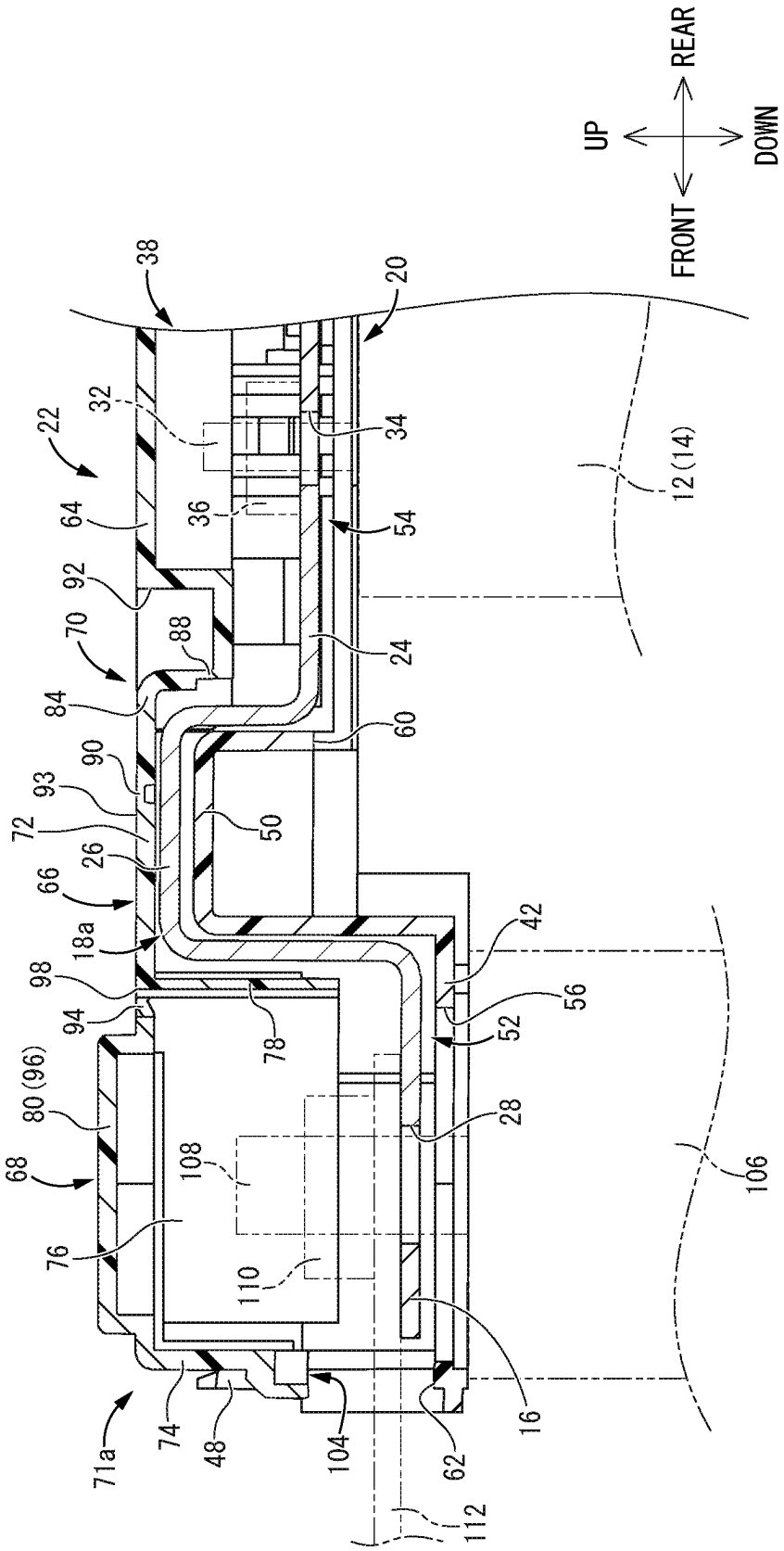
UP
REAR
DOWN
FRONT
10
38
20
22
32
34
12 (14)
64
36
54
92
70
88
24
84
60
90
93
50
72
26
66
18a
42
98
56
94
78
52
80 (96)
28
68
108
106
76
110
16
71a
74
48
104
62
112

FIG.6

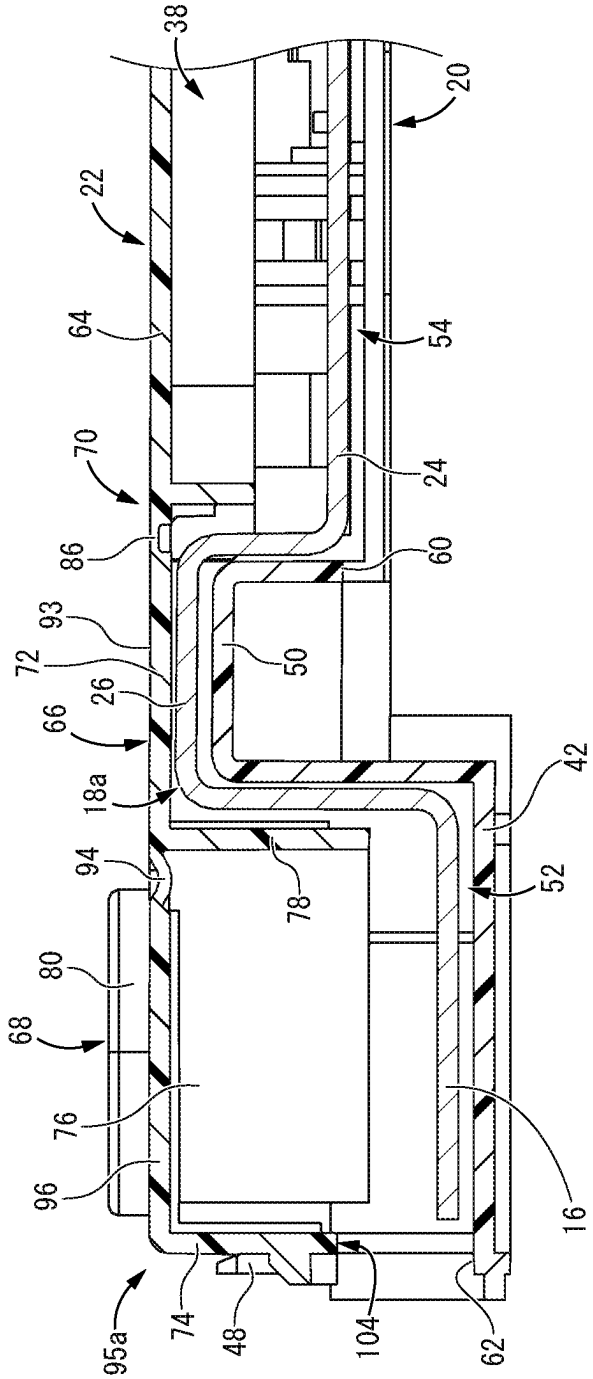
10
38
20
22
64
54
70
24
86
60
93
72
50
26
66
42
18a
94
78
52
80
68
76
16
96
95a
74
48
104
62

FIG.7

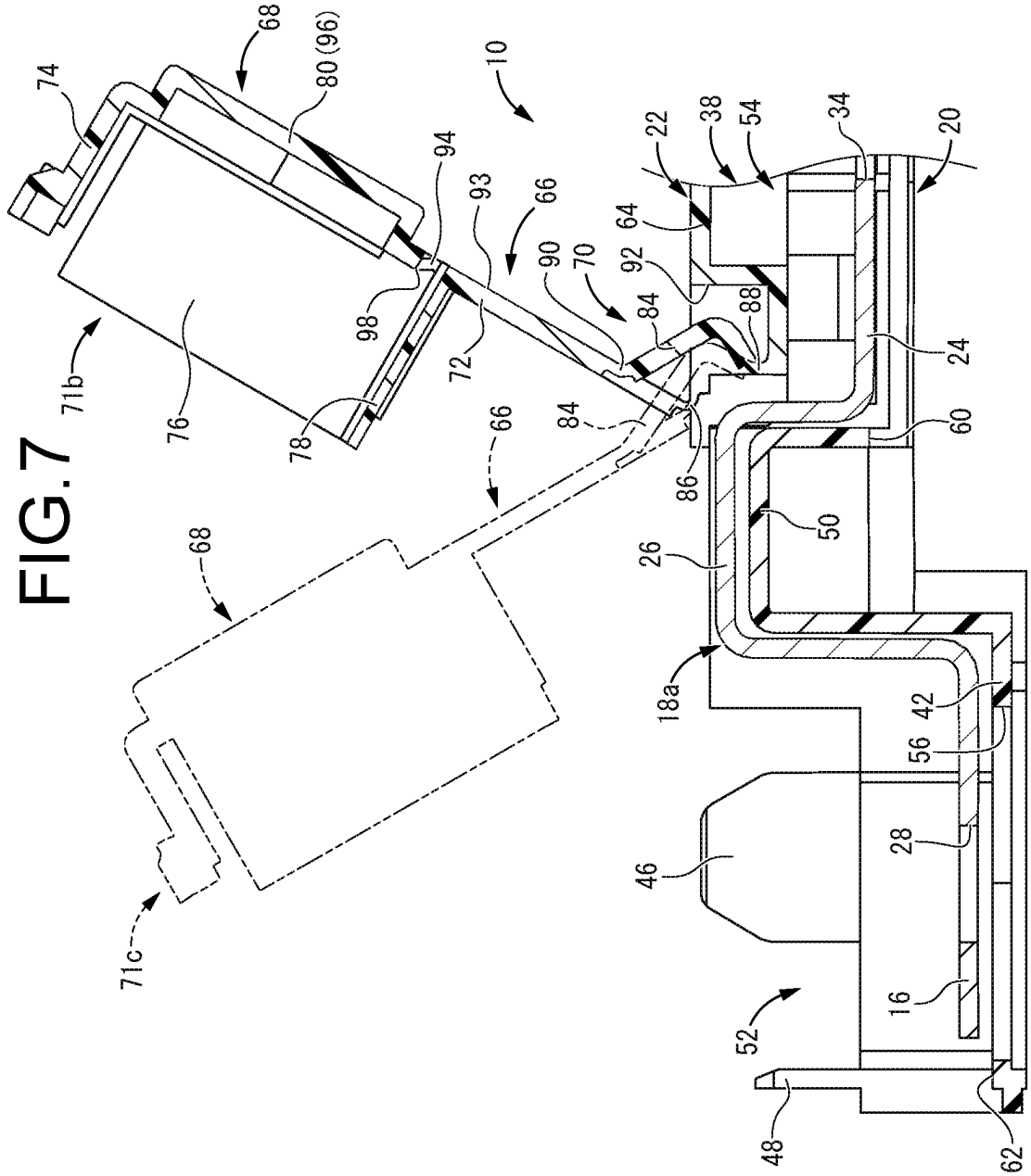
10
20
22
24
26
16
18a
28
34
38
42
46
48
50
52
54
56
60
62
64
66
68
70
71b
71c
72
74
76
78
80 (96)
84
86
88
90
92
93
94
98

FIG.8

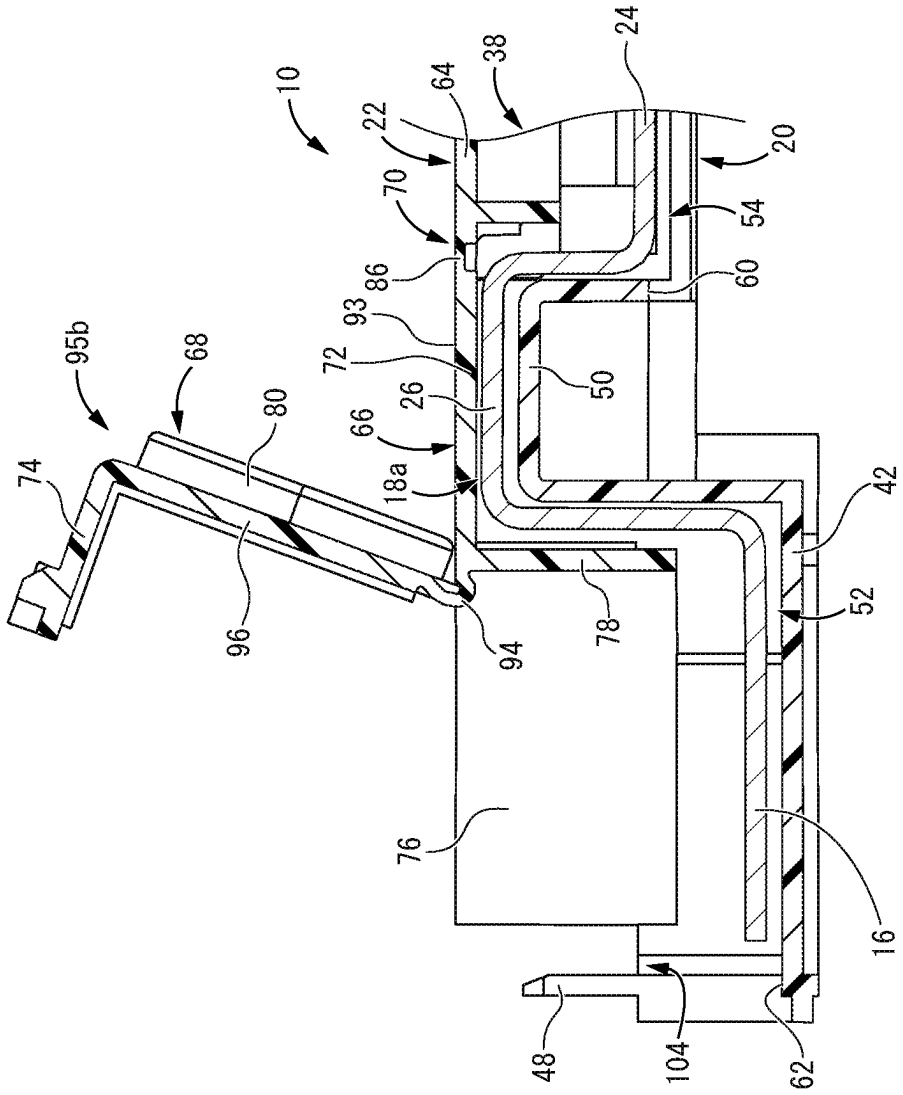
10
95b
68
74
80
96
94
18a
66
26
72
93
86
70
22
64
38
24
20
54
60
50
78
76
42
52
16
48
104
62

FIG.9

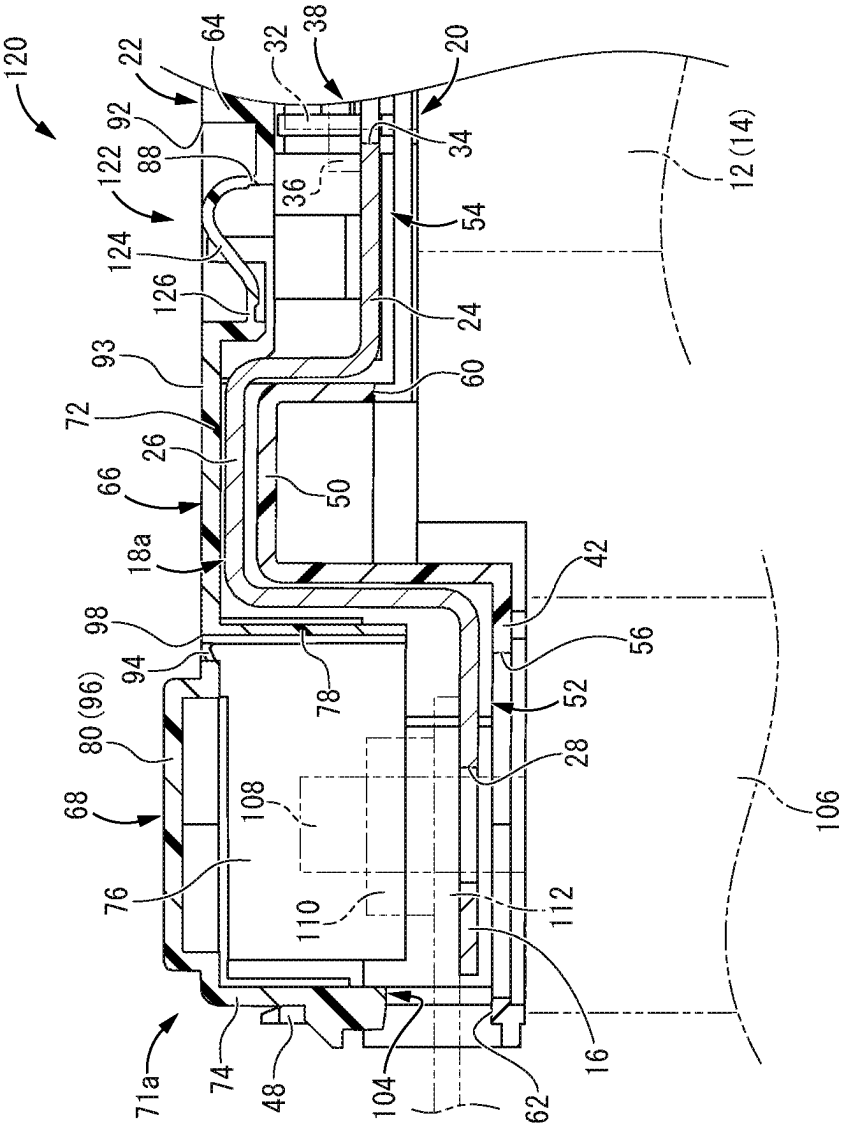
120
22
64
32
38
20
92
88
122
124
126
36
34
54
12 (14)
24
93
60
72
26
66
50
18a
42
98
56
94
78
52
80 (96)
28
68
108
106
76
110
112
71a
74
48
104
62
16

FIG.10

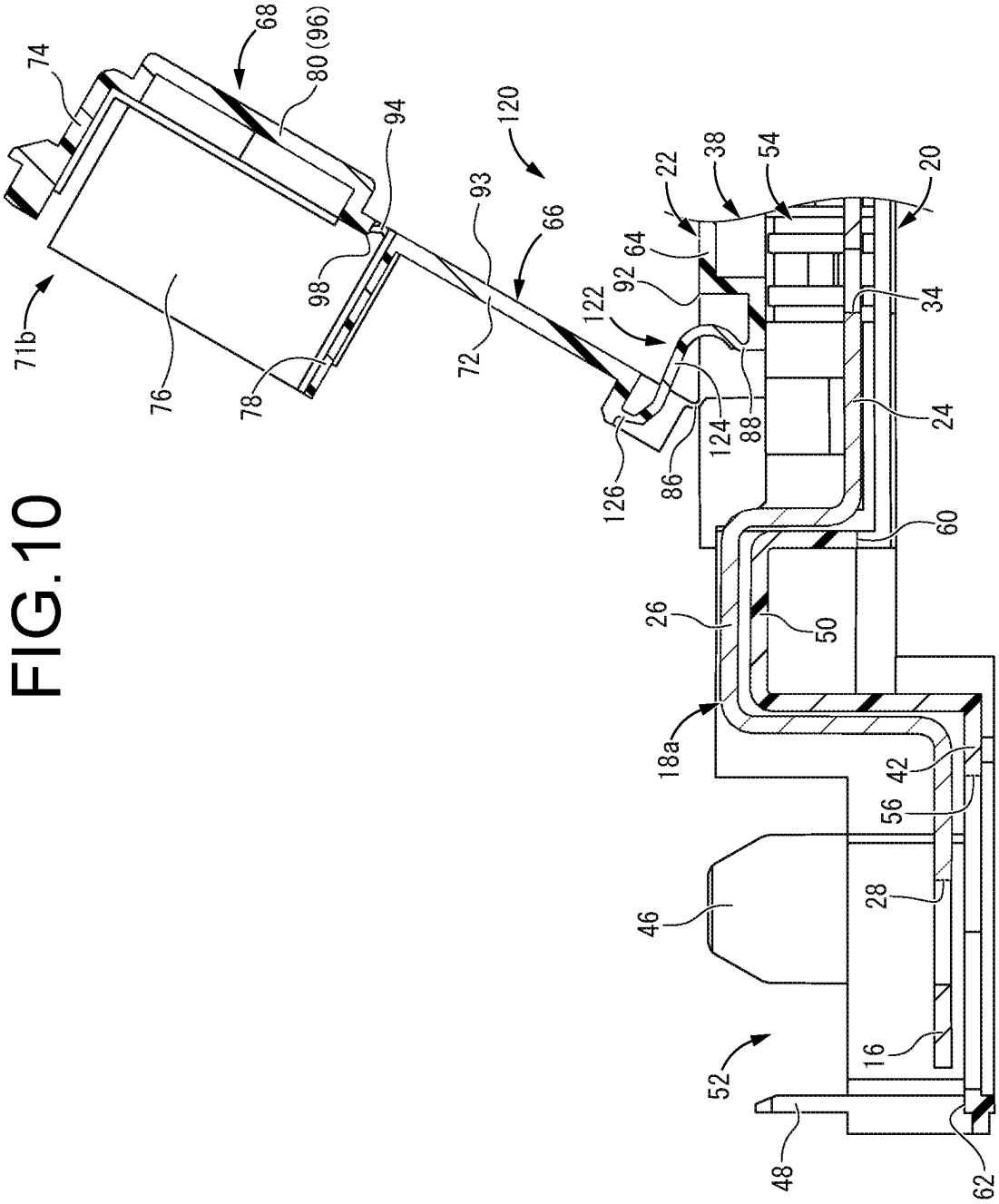
74
68
80 (96)
94
120
93
66
71b
76
78
98
72
122
92
64
22
38
54
20
34
24
88
124
86
126
60
26
50
18a
42
56
28
46
16
52
48
62

FIG.11

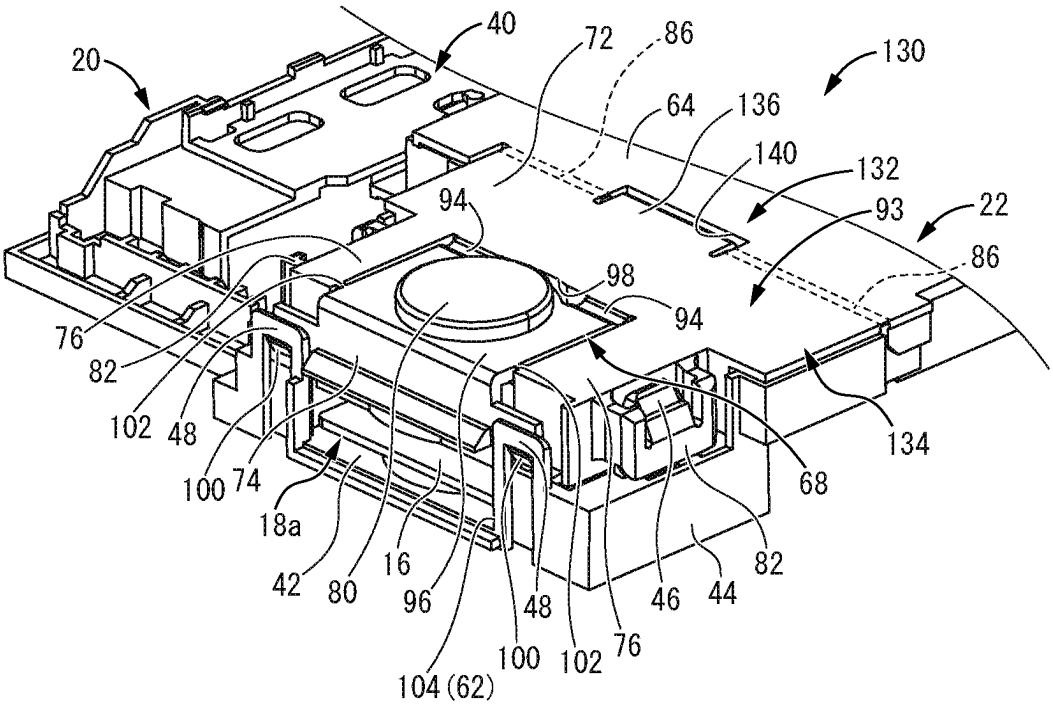
20
40
72
86
130
64
136
140
132
93
22
86
94
98
94
76
82
102
48
100
74
18a
42
80
16
96
104 (62)
100
48
102
76
46
44
82
68
134

FIG.12

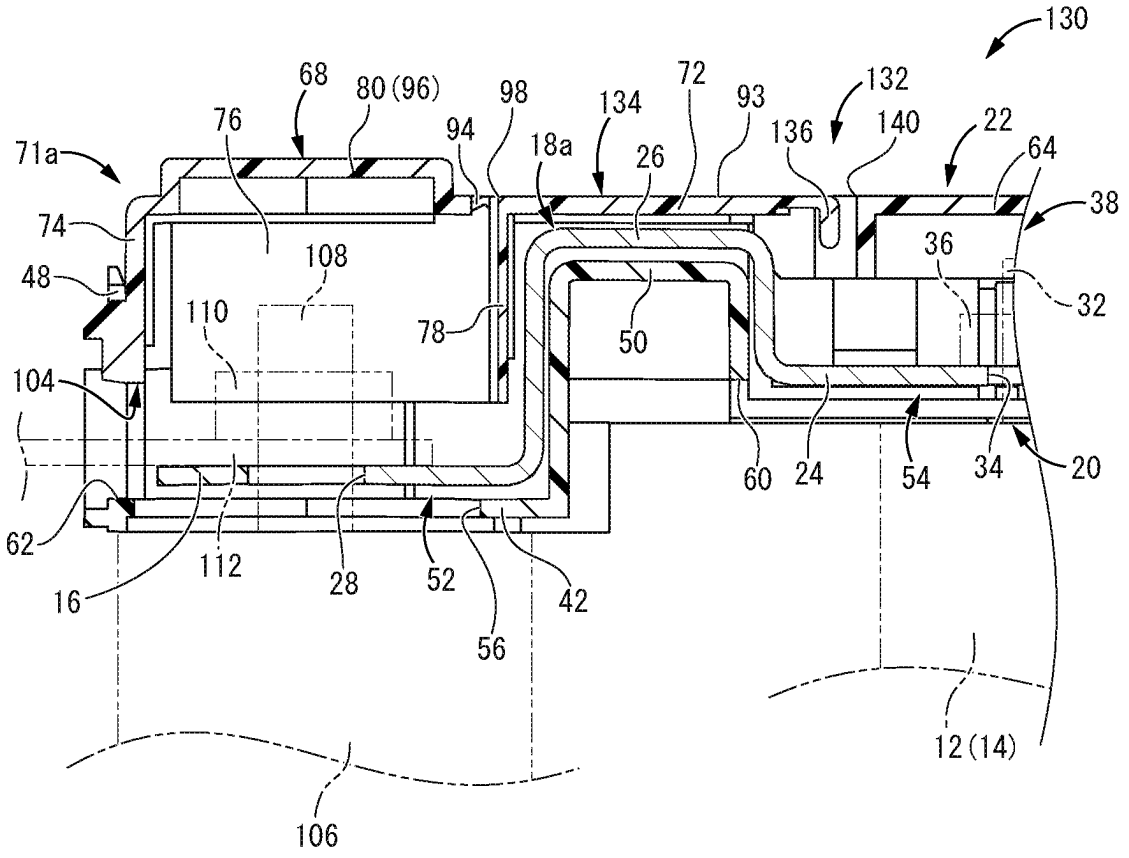
130
68
80(96)
98
134
72
93
132
76
94
18a
26
136
140
22
64
71a
74
38
108
36
48
110
78
50
32
104
60
24
54
34
20
62
112
28
52
42
16
56
12(14)
106

FIG.13

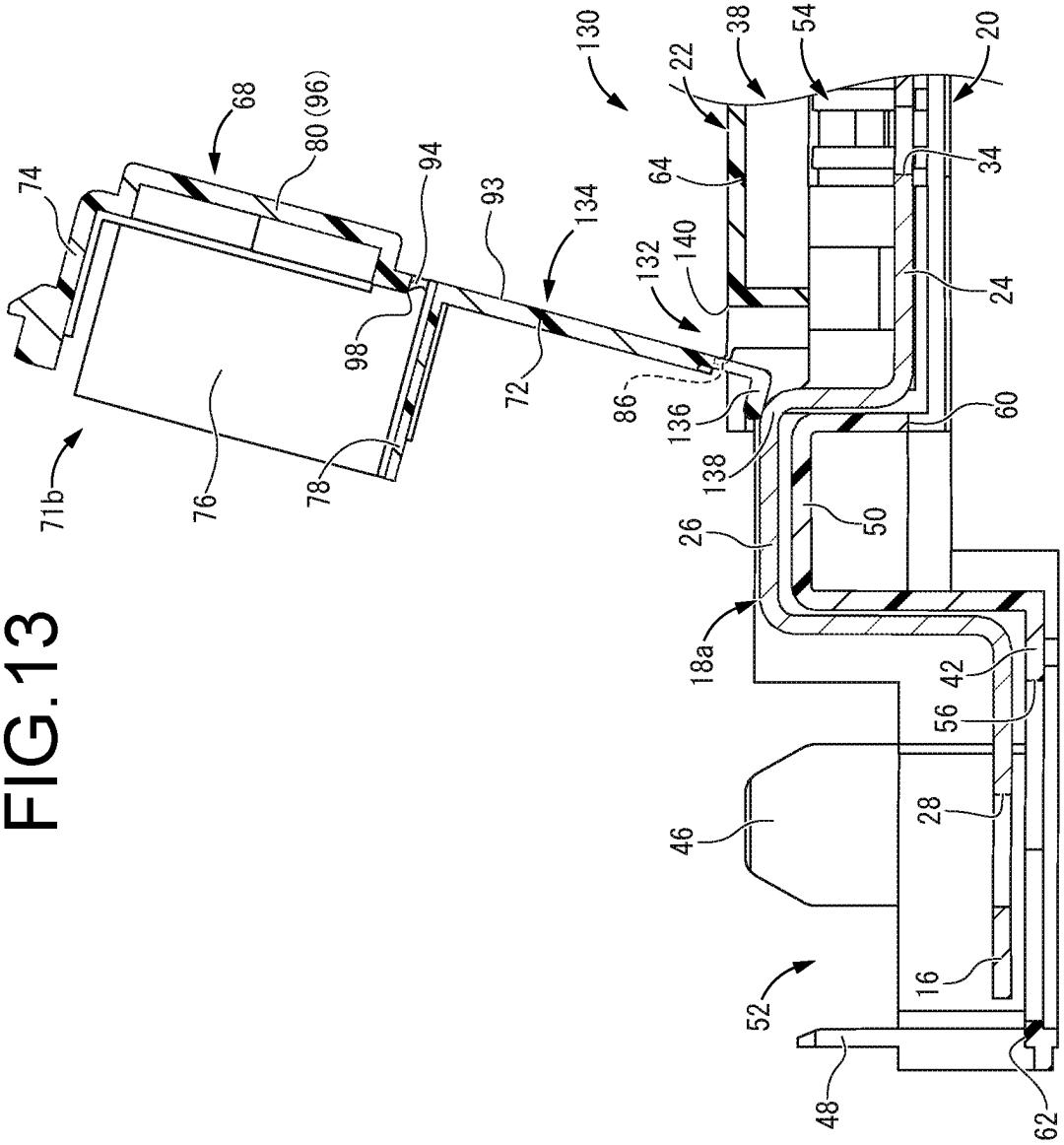
74
68
80 (96)
94
93
134
130
22
38
54
20
64
34
132
140
24
98
72
86
136
60
71b
76
78
138
26
50
18a
42
56
46
28
16
52
48
62

FIG.14

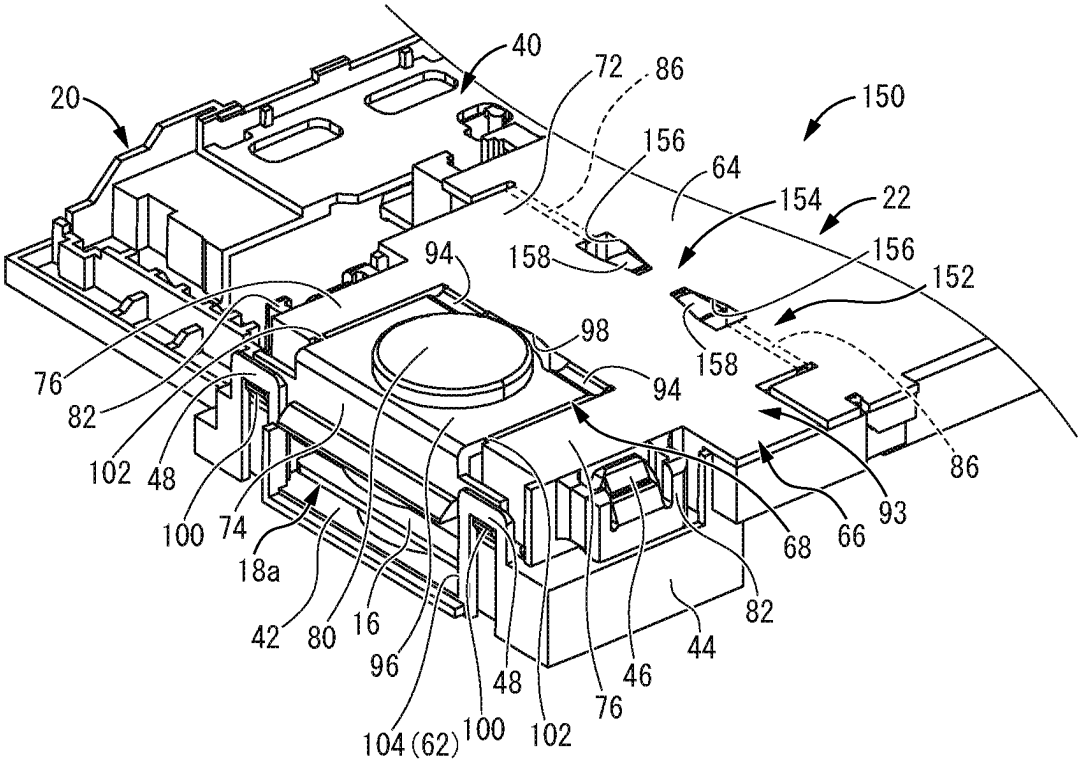
20
40
72
86
150
156
64
154
22
158
156
152
94
98
158
94
76
82
102
48
100
74
18a
42
80
16
96
104 (62)
100
48
102
76
46
44
82
68
66
93
86

FIG.15

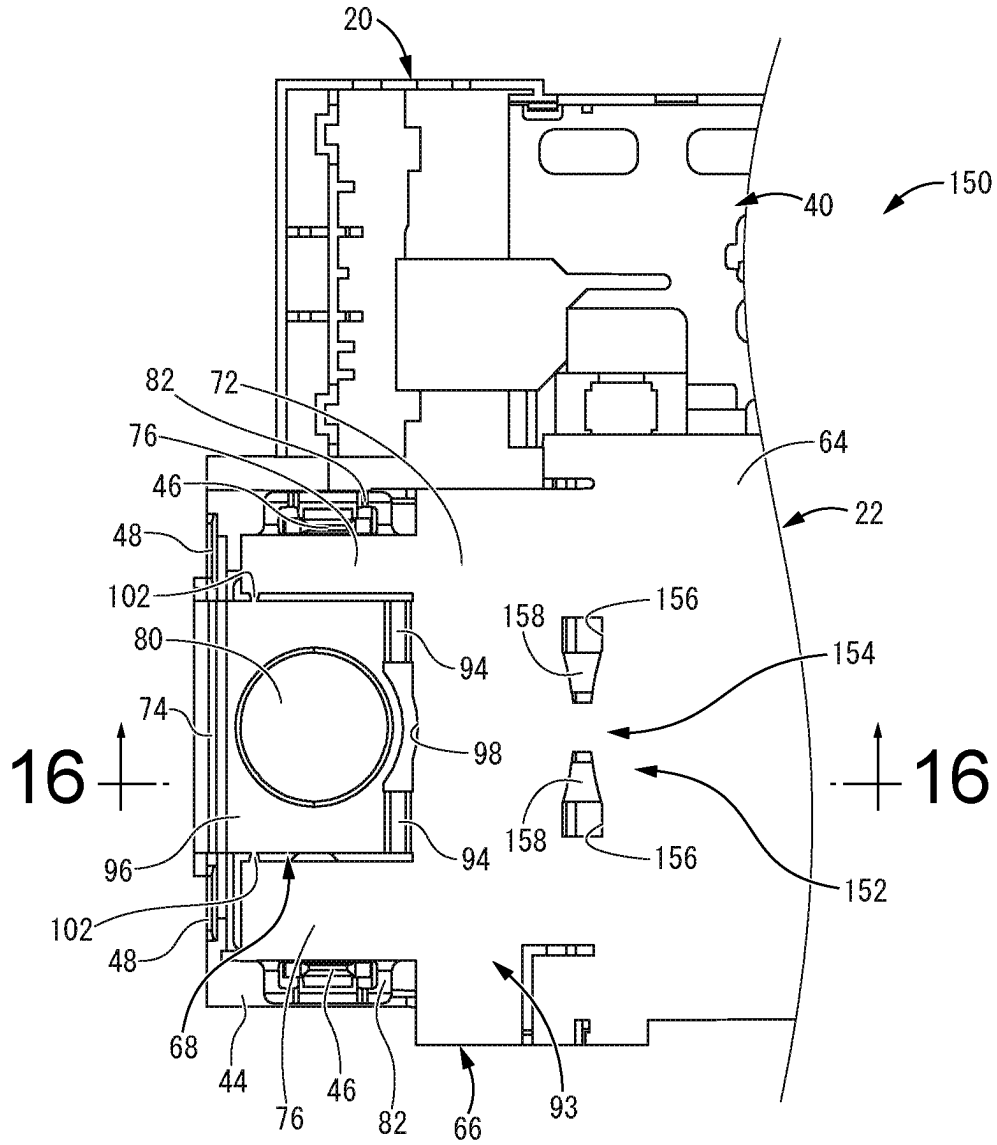
20
150
40
82
72
76
64
46
22
48
102
158
156
80
94
154
74
16
98
16
158
96
94
156
152
102
48
68
44
76
46
82
66
93

FIG.16

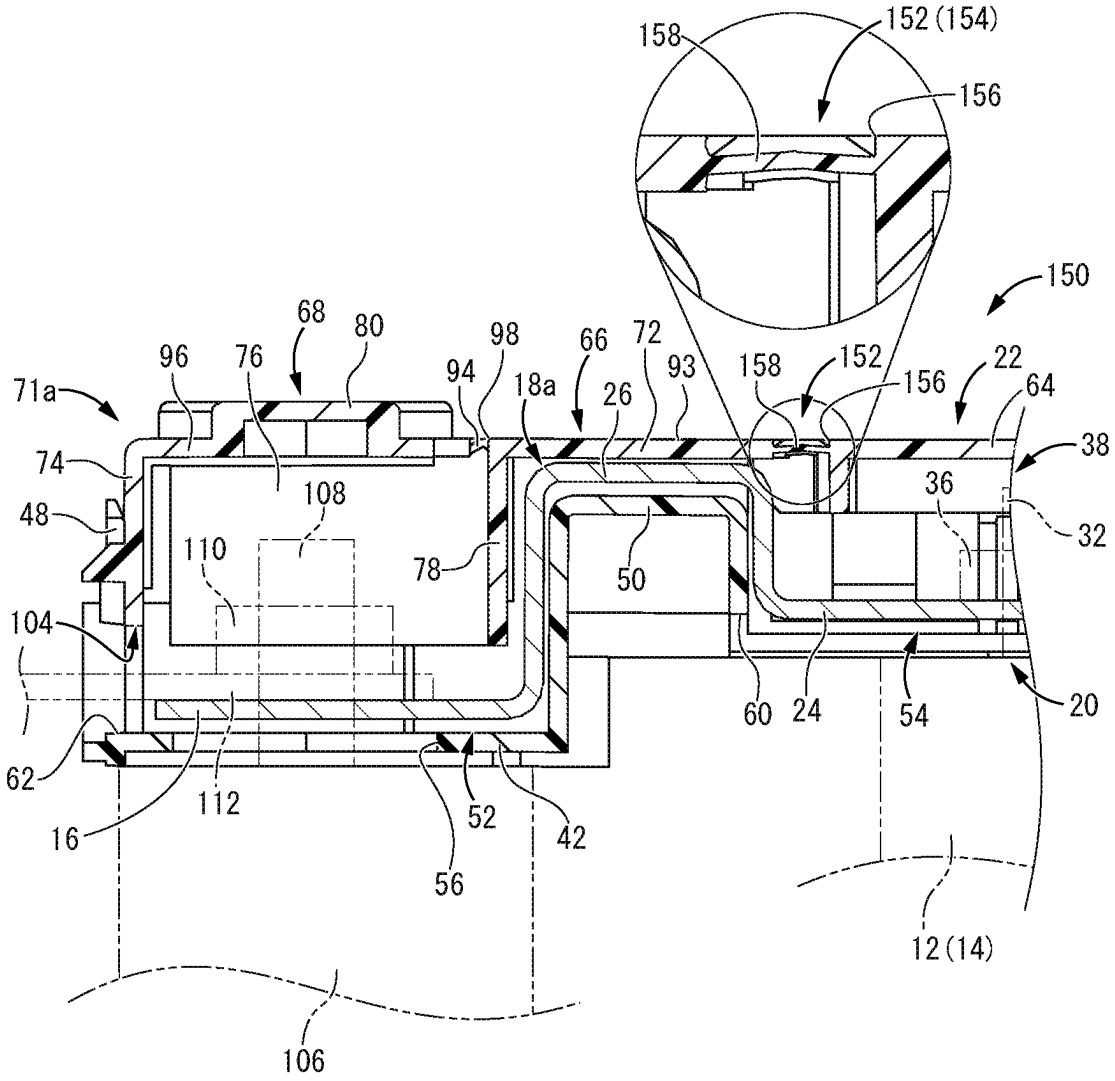
158
152 (154)
156
150
68
80
98
66
72
96
76
94
18a
26
93
158
152
156
22
64
71a
74
38
108
36
48
110
78
50
32
104
60
24
54
20
62
112
52
42
16
56
12 (14)
106

FIG.17

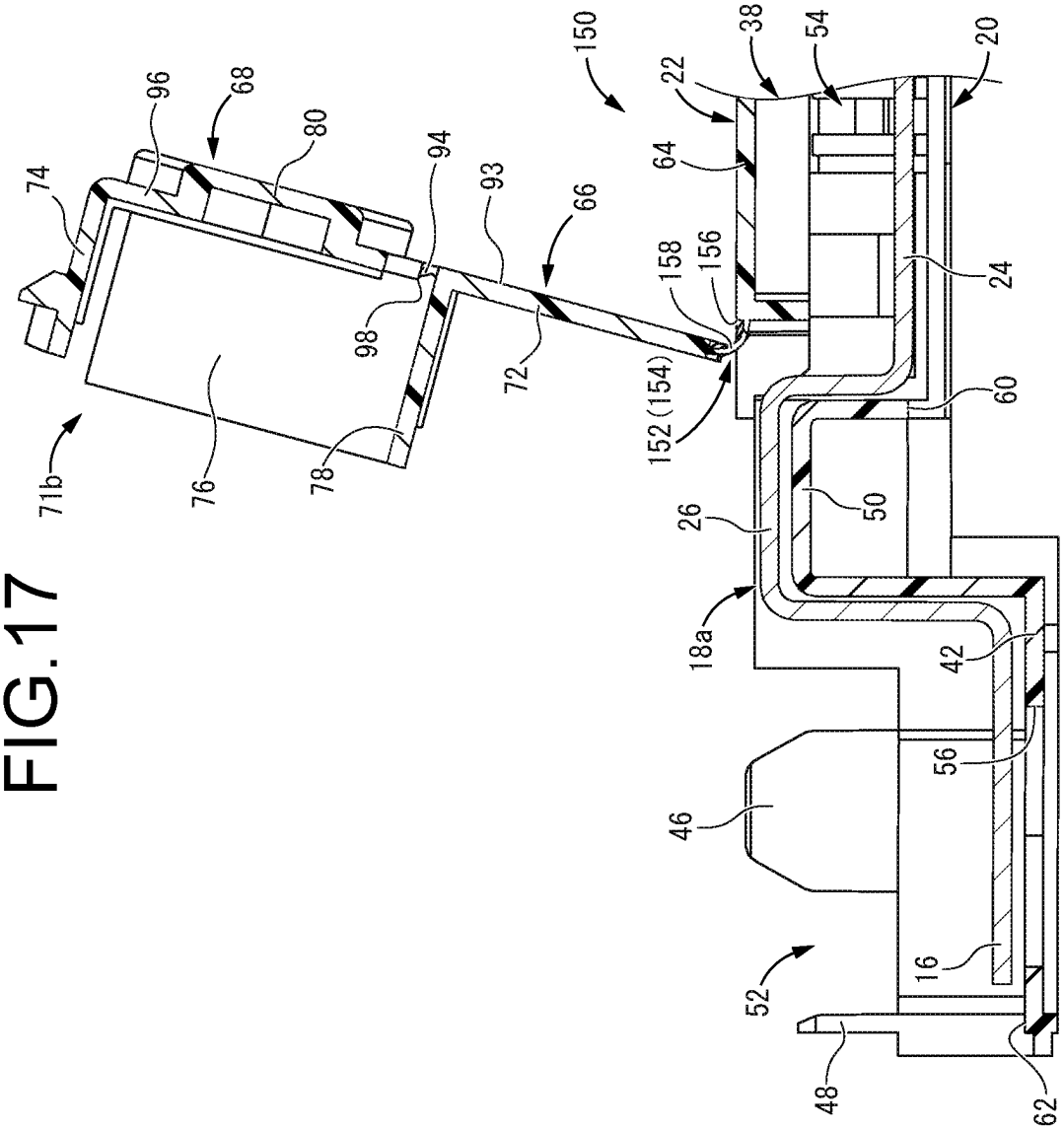
71b
74
96
68
80
76
78
98
94
93
72
66
150
152 (154)
158
156
22
64
38
54
20
24
60
50
26
18a
42
56
46
16
52
48
62

BATTERY WIRING MODULE

INCORPORATED BY REFERENCE

The disclosure of Japanese Patent Application No. 2021-072443 filed on Apr. 22, 2021 including the specification, drawings and abstract is incorporated herein by reference in its entirety.

BACKGROUND

1. Technical Field

This disclosure relates to a battery wiring module.

2. Description of the Related Art

Japanese Unexamined Patent Publication No. JP-A-2013-037988 discloses a battery wiring module mounted on a cell group in order to electrically connect the cell group in which a plurality of cells having a pair of positive and negative electrode terminals are arranged side by side. Such a battery wiring module includes a plurality of bus bars for electrically connecting the electrode terminals of the opposite polarities, a main body having insulation properties for accommodating the plurality of bus bars separately, and a cover portion for covering the opening of the main body. By mounting such a battery wiring module on the cell group, it is possible to simultaneously position a plurality of bus bars between the corresponding electrode terminals and collectively connect the cells.

SUMMARY

In the battery wiring module of JP-A-2013-037988, at the end of the battery wiring module, the pair of electrode terminals to which the bus bar for electrically connecting an external electric wire or the cell groups is mounted are exposed without being covered by the cover portion. Therefore, during vehicle maintenance, it may be desired to take measures that can suppress touching of the operator or the like on the exposed electrode terminals that can be a live portion. On the other hand, during vehicle manufacture, in order to ensure good workability when connecting the exposed electrode terminals of adjacent cell groups with a bus bar or the like, or when connecting an external electric wire to the exposed electrode terminal, there is also a conflicting request to ensure a wide exposure of the electrode terminals.

Therefore, the following description will disclose a battery wiring module capable of achieving improvement in safety during vehicle maintenance and improvement in workability during vehicle manufacture in a compatible manner.

The present disclosure provides a battery wiring module configured to be mounted on a cell group in which a plurality of cells are arranged side by side, the battery wiring module comprising: a plurality of bus bars configured to be electrically connected to the cell group, the bus bars including a terminating bus bar having an external connection portion; a case of insulation accommodating the plurality of bus bars; a cover portion mounted on the case to cover the plurality of bus bars, the cover portion comprising a fixing portion fixedly mounted on the case, a large lid portion attached to the fixing portion via a first hinge portion to cover the external connection portion and a peripheral region of the external connection portion of the terminating bus bar, the large lid portion being rotatable around the first hinge portion from a first closed end covering the external connection portion and the peripheral region of the external connection portion, to a first open end exposing the external connection portion and the peripheral region of the external connection portion, and a small lid portion constituted by a part of the large lid portion and attached to the large lid portion via a second hinge portion to cover the external connection portion, the small lid portion being rotatable around the second hinge portion from a second closed end covering the external connection portion, to a second open end exposing the external connection portion; and a retainer configured to retain the large lid portion at the first open end.

According to the present disclosure, it is possible to provide a battery wiring module capable of achieving improvement in safety during vehicle maintenance and improvement in workability during vehicle manufacture in a compatible manner.

BRIEF DESCRIPTION OF THE DRAWINGS

The foregoing and/or other objects, features and advantages of the disclosure will become more apparent from the following description of embodiments with reference to the accompanying drawings in which like reference numerals designate like elements and wherein:

FIG. **1** is a perspective view showing a battery wiring module according to Embodiment 1 in a mounted state on a cell group;

FIG. **2** is an enlarged perspective view showing a principal part of a part A of the battery wiring module shown in FIG. **1** in a state where a large lid portion and a small lid portion are respectively located at a first closed end and a second closed end;

FIG. **3** is a plan view of the battery wiring module shown in FIG. **2**;

FIG. **4** is an exploded perspective view of the battery wiring module shown in FIG. **2**;

FIG. **5** is a cross sectional view taken along line **5-5** of FIG. **3**;

FIG. **6** is a cross sectional view taken along line **6-6** of FIG. **3**;

FIG. **7** is a vertical cross-sectional view showing the battery wiring module shown in FIG. **2** in a state where the large lid portion is held at a first open end, corresponding to FIG. **5**;

FIG. **8** is a vertical cross-sectional view showing the battery wiring module shown in FIG. **2** in a state where the small lid portion is located at a second open end, corresponding to FIG. **6**;

FIG. **9** is a vertical cross-sectional view showing a battery wiring module according to Embodiment 2 in a state where the large lid portion and the small lid portion are respectively located at the first closed end and the second closed end, corresponding to FIG. **5**;

FIG. **10** is a vertical cross-sectional view showing the battery wiring module shown in FIG. **9** in a state where the large lid portion is held at the first open end;

FIG. **11** is a perspective view showing a battery wiring module according to Embodiment 3 in a state where a large lid portion and the small lid portion are respectively located at the first closed end and the second closed end;

FIG. **12** is a vertical cross-sectional view of the battery wiring module shown in FIG. **11**, corresponding to FIG. **5**;

FIG. **13** is a vertical cross-sectional view showing the battery wiring module shown in FIG. **12** in a state where the large lid portion is held at the first open end;

FIG. **14** is a perspective view showing a battery wiring module according to Embodiment 4 in a state where the large lid portion and the small lid portion are respectively located at the first closed end and the second closed end;

FIG. **15** is a plan view of the battery wiring module shown in FIG. **14**;

FIG. **16** is a cross sectional view taken along line **16-16** of FIG. **15**; and

FIG. **17** is a vertical cross-sectional view showing the battery wiring module shown in FIG. **16** in a state where the large lid portion is held at the first open end.

DETAILED DESCRIPTION OF EMBODIMENTS

Explanation of Embodiments of the Present Disclosure

First, preferred embodiments of the present disclosure will be listed and described.

(1) The present disclosure provides a battery wiring module configured to be mounted on a cell group in which a plurality of cells are arranged side by side, the battery wiring module comprising: a plurality of bus bars configured to be electrically connected to the cell group, the bus bars including a terminating bus bar having an external connection portion; a case of insulation accommodating the plurality of bus bars; a cover portion mounted on the case to cover the plurality of bus bars, the cover portion comprising a fixing portion fixedly mounted on the case, a large lid portion attached to the fixing portion via a first hinge portion to cover the external connection portion and a peripheral region of the external connection portion of the terminating bus bar, the large lid portion being rotatable around the first hinge portion from a first closed end covering the external connection portion and the peripheral region of the external connection portion, to a first open end exposing the external connection portion and the peripheral region of the external connection portion, and a small lid portion constituted by a part of the large lid portion and attached to the large lid portion via a second hinge portion to cover the external connection portion, the small lid portion being rotatable around the second hinge portion from a second closed end covering the external connection portion, to a second open end exposing the external connection portion; and a retainer configured to retain the large lid portion at the first open end.

According to this structure, the plurality of bus bars electrically connected to the cell group are accommodated in the case of insulation and covered with the cover portion attached to the case. The plurality of bus bars include the terminating bus bar having the external connection portion, and the cover portion covering the bus bars has the large lid portion that is rotatably attached to the fixing portion fixedly mounted on the case via the first hinge portion. The large lid portion covers the external connection portion and the peripheral region thereof, and is rotatable around the first hinge portion from the first closed end closing the external connection portion and the peripheral region thereof, to the first opening end exposing the external connection portion and the peripheral region thereof. Moreover, the retainer is capable of retaining the large lid portion at the first open end. With this configuration, during vehicle manufacture, the large lid portion can be held in a state where the external connection portion of the cell group is largely exposed. Thus, connection with the adjacent cell group and connection work with the external electrical wire connected to a device such as an inverter can be performed by securing a wide work space with good workability.

Furthermore, the battery wiring module includes the small lid portion constituted by a part of the large lid portion and rotatably attached to the large lid portion via the second hinge portion to cover the external connection portion. With this configuration, during vehicle maintenance, it is possible to open only the small lid portion without opening the large lid portion, thereby suppressing touching of the operator or the like on the exposed external connection portion that can be a live portion. As a result, it is possible to achieve improvement in safety during vehicle maintenance and improvement in workability during vehicle manufacture in a compatible manner.

(2) It is preferable that the retainer includes an urging arm whose opposite end portions are linked to the fixing portion and the large lid portion, the urging arm being configured to exert an urging force between the fixing portion and the large lid portion, the urging arm is elastically deformable due to rotational displacement of the large lid portion with respect to the fixing portion, and the urging arm undergoes tensile deformation until passing an intermediate position between the first closed end and the first open end, and after passing the intermediate position, the urging arm elastically recovers such that the urging arm exerts the urging force urging the large lid portion toward the fixing portion to retain the large lid portion at the first open end.

The retainer includes the elastically deformable urging arm, and the urging arm is elastically deformed due to the rotational displacement of the large lid portion with respect to the fixing portion. This urging arm has a leaf spring function, and the urging arm elastically recovers when the large lid portion passes the intermediate position between the first closed end and the first open end. Therefore, when the large lid portion is located at the first open end, the shape of the urging arm is maintained, and the external connection portion and the peripheral region thereof can be held in a state of being exposed to the outside.

(3) It is preferable that the urging arm has an L-letter shape in which a side linked to the fixing portion and a side linked to the large lid portion are orthogonal to each other. By appropriately setting the shape of the urging arm, the leaf spring function of the urging arm can be favorably exhibited. Accordingly, in the state where the large lid portion is located at the first open end, it is possible to easily maintain the exposed state of the external connection portion and the peripheral region thereof.

(4) It is preferable that a linking portion of the urging arm to the large lid portion is located inside in a height direction with respect to an outer surface of the large lid portion, and the urging arm has a curved shape that is convex outward in the height direction. By appropriately setting the shape of the urging arm, the leaf spring function of the urging arm can be favorably exhibited. Accordingly, in the state where the large lid portion is located at the first open end, it is possible to easily maintain the exposed state of the external connection portion and the peripheral region thereof. In particular, by setting the linking portion of the urging arm to the fixing portion and the large lid portion inside in the height direction with respect to the outer surface of the large lid portion, the projecting dimension of the urging arm from the cover portion can be minimized as well.

(5) It is preferable that the retainer includes a thin-plate portion whose opposite end portions are linked to the fixing portion and the large lid portion, the thin-plate portion constituting a butterfly hinge that is elastically deformable due to rotational displacement of the large lid portion with respect to the fixing portion, in a state where the large lid portion is located at the first closed end, the thin-plate

portion is curved to be convex outward in a height direction, and the large lid portion is configured to be held at the first open end by the thin-plate portion being elastically deformed such that a direction of curve of the thin-plate portion is reversed. The retainer includes the thin-plate portion constituting the elastically deformable butterfly hinge, and is capable of retaining the large lid portion at either the first closed end or the first open end depending on the direction in which the thin-plate portion is curved. This makes it possible to stably switch between the covered state and the exposed state of the external connection portion and the peripheral region thereof by the large lid portion.

(6) It is preferable that the retainer includes an engaging projection portion located on a side of the first hinge portion while projecting from the large lid portion, and an engage target portion provided on a side of the case, and when the large lid portion is located at the first open end, the engaging projection portion is brought into pressure contact and engaged with the engage target portion such that the large lid portion is held at the first open end. Since a physical engaging force (a pressure contact force) between the engaging projection portion and the engage target portion can be utilized as the retaining force of the large lid portion to the first open end, the large lid portion can be stably held at the first open end. Moreover, since the engaging projection portion is located on the first hinge portion side, the engaging projection portion can be engaged with the engage target portion on the case side while suppressing the projecting height, which also contributes to downsizing. The engage target portion can be constituted by using any member on the case side as long as the member can be engaged with the engaging projection portion. For example, the terminating bus bar, the wall portion of the case, or the like may be used.

(7) It is preferable that the external connection portion is configured to be connected to a conductor, and in a state where the small lid portion is located at the second closed end, a gap is formed between the small lid portion and the case, and the small lid portion is held at the second closed end with the conductor extending from the gap to an outside. After connecting an electric wire or a bus bar to the external connection portion, the small lid portion can be held at the second closed end, thereby stably taking measures against electric shock of the external connection portion. Besides, in the state where the small lid portion is located at the second closed end, the conductor such as the electric wire and the bus bar extending from the external connection portion to the outside is inhibited from being pinched between the small lid portion and the case and get damaged.

(8) It is preferable that the small lid portion is permitted to be displaced toward a side of the second open end by elastic deformation of the second hinge portion, while the small lid portion is configured to be held on a side of the second closed end by an elastic recovery force of the second hinge portion. Since the small lid portion can be held on the second closed end side by utilizing the second hinge portion, the safety of the external connection portion can be further improved.

Details of Embodiments of the Present Disclosure

Specific examples of the battery wiring module of the present disclosure will be described below with reference to the drawings. The present disclosure is not limited to these examples, but is indicated by the scope of the claims, and all changes that come within the meaning and range of equivalency of the claims are intended to be embraced therein.

Embodiment 1

Hereinafter, a battery wiring module **10** according to Embodiment 1 of the present disclosure will be described with reference to FIGS. **1** to **8**. As shown in FIG. **1**, for example, in an electric automobile or the like, the battery wiring module **10** is mounted on a cell group **14** in which a plurality of cells **12** are arranged side by side. In addition, FIG. **2** and the following drawings show the battery wiring module **10** by extracting a part A in FIG. **1**, which is the principal part of the present disclosure, and show the connected portion between the terminal portion of a cell group **14** and the battery wiring module **10**. In the following description, the specific structure of the part A in FIG. **1** will be described in detail, and the portion other than the part A in FIG. **1** will be described only briefly. Here, the structure of the battery wiring module **10** other than the part A in FIG. **1** is not limited. Further, the specific shape of the entire battery wiring module **10** is designed according to the arrangement mode of the plurality of cells **12**, and is not limited to the mode shown in FIG. **1**. Besides, the orientation of the battery wiring module **10** when mounted on a vehicle is not limited, but in the following description, the upper side refers to the upper side in FIG. **5**, the lower side refers to the lower side in FIG. **5**, and the left side refers to the upper side in FIG. **3**, the right side refers to the lower side in FIG. **3**, the front side refers to the left side in FIG. **3**, and the rear side refers to the right side in FIG. **3**.

Battery Wiring Module **10**

The battery wiring module **10** is provided with a plurality of bus bars **18** including a terminating bus bar **18***a* having an external connection portion **16**, and electrically connects the plurality of adjacent cells **12**, **12**, which constitute the cell group **14**, to each other. Further, the battery wiring module **10** includes a case **20** of insulation accommodating the plurality of bus bars **18** including the terminating bus bar **18***a*, and a cover portion **22** mounted on the case **20** and covering the plurality of bus bars **18** including the terminating bus bar **18***a*.

Terminating Bus Bar **18***a*

The terminating bus bar **18***a* is connected to the cells **12** located at the opposite ends of the cell group **14** arranged in parallel, and has the external connection portion **16**. As shown in FIG. **4**, the terminating bus bar **18***a* extends in the front-rear direction overall, and is made of a metal such as aluminum. The terminating bus bar **18***a* is formed by, for example, bending a blank metal plate into a predetermined shape by press working or the like. In Embodiment 1, the external connection portion **16** having an approximately rectangular shape is provided in the front portion, and a battery connection portion **24** having an approximately rectangular shape is provided in the rear portion. The external connection portion **16** and the battery connection portion **24** each extend in the horizontal direction (the direction orthogonal to the vertical direction), and the external connection portion **16** and the battery connection portion **24** are remote from each other in the front-rear direction. The external connection portion **16** and the battery connection portion **24** are linked to each other by an approximately U-shaped linking portion **26** opening downward.

The external connection portion **16** is penetrated by a bolt insertion hole **28** in the plate thickness direction (the vertical direction) at its approximately central portion. Further, the external connection portion **16** is penetrated by a pin inser-

tion hole **30** in the plate thickness direction (the vertical direction) at a position away from the bolt insertion hole **28** (on the right side in Embodiment 1). As shown in FIG. **5**, the battery connection portion **24** is penetrated by an electrode terminal insertion hole **34** at its approximately central portion, through which an electrode terminal **32** of the cell **12** is inserted. As will be described later, the battery connection portion **24** is exposed downward from the case **20**. By the electrode terminal **32** being inserted through the electrode terminal insertion hole **34** from below and by a nut **36** being fastened, the cell **12** and the terminating bus bar **18***a* are configured to be electrically connected to each other. The electrical connection between the cell and the bus bar **18** (the terminating bus bar **18***a*) is not limited to the one by fastening, but they can be electrically connected by any conventionally known method.

In the portion other than the part A in FIG. **1** of the battery wiring module **10**, the plurality of bus bars **18** having battery connection portions at the opposite ends are provided in the front-rear direction. The cells **12**, **12** that are adjacent in the front-rear direction are linked to each other by each bus bar **18**. Each of the bus bars **18** linking the cells **12**, **12** is electrically connected to the terminating bus bar **18***a* accommodated in a terminating bus bar accommodating portion **38** of the case **20**, which will be described later. With this configuration, the cells **12** are electrically connected.

Case **20**

The case **20** has an approximately rectangular shape in plan view and is formed of synthetic resin or the like having insulation properties. The case **20** includes terminating bus bar accommodating portions **38** at the opposite end sides in the longitudinal direction (the front end side and the rear end side) in which the terminating bus bars **18***a* are accommodated, and a wiring accommodating portion **40** in which the wiring such as an electrical wire and an FPC (not shown), which are connected to the plurality of bus bars **18** including the terminating bus bar **18***a*, is accommodated. In Embodiment 1, in the case **20**, the wiring accommodating portion **40** is provided on the left side of the terminating bus bar accommodating portion **38**. Further, the case **20** includes a bottom wall **42** and a peripheral wall **44** projecting upward from the outer peripheral end portion of the bottom wall **42**. The bottom wall **42** and the peripheral wall **44** include a convex portion and a claw portion projecting to the inside of the case **20**. For example, by a concave portion being provided to each bus bar **18** including the terminating bus bar **18***a* and the FPC accommodated in the wiring accommodating portion **40**, and the convex portion being fitted to the concave portion or the concave portion being locked by the claw portion, the bus bar **18** (the terminating bus bar **18***a*), the electric wire, the FPC, and the like are fixed to the case **20**.

In the entire battery wiring module **10** including the portion other than the part A in FIG. **1**, a single case **20** extending long in the front-rear direction is provided, and the plurality of bus bars **18** are accommodated in the front-rear direction. Inside the case **20**, a partition wall is provided between the bus bars **18**, **18** that are adjacent in the front-rear direction so that the bus bars **18**, **18** do not come into contact with each other. Besides, a locking portion and/or a locked portion is provided on the outer surface of the peripheral wall **44**, and a plurality of locking portions and locked portions are provided in the front-rear direction in the entire case **20**. As will be described later, the cover portion **22** include a locked portion that engages with the locking portion of the case **20** and a locking portion that engages with the locked portion of the case **20**. By the locking portions and the locked portions engaging with each other, the cover portion **22** is fixed to the case **20**.

As shown in FIG. **4** and the like, in the part A of the battery wiring module **10**, claw-shaped first locking portions **46**, **46** are provided on the left and right opposite sides of an external-side accommodating portion **52**, which will be described later, while at the front of the external-side accommodating portion **52**, frame-shaped second locked portions **48**, **48** are provided on the left and right opposite sides of a front opening portion **62**, which will be described later.

The terminating bus bar accommodating portion **38** has a shape approximately corresponding to the terminating bus bar **18***a*, and a linking projection portion **50** that enters the linking portion **26** of the terminating bus bar **18***a* is provided at the intermediate portion in the front-rear direction of the terminating bus bar accommodating portion **38** on the bottom wall **42**. That is, in the terminating bus bar accommodating portion **38**, the front portion comprises the external-side accommodating portion **52** in which the external connection portion **16** is accommodated, while the rear portion comprises a battery-side accommodating portion **54** in which the battery connection portion **24** is accommodated. The external-side accommodating portion **52** and the battery-side accommodating portion **54** are linked by the linking projection portion **50**.

The bottom wall **42** of the external-side accommodating portion **52** is penetrated by a bolt insertion hole **56** in the plate thickness direction (the vertical direction) at its approximately central portion. The bolt insertion hole **56** is formed to have a larger inner diameter dimension than that of the bolt insertion hole **28** provided to the external connection portion **16**. Further, a pin insertion hole **58** is formed on the bottom wall **42** of the external-side accommodating portion **52** at a position corresponding to the pin insertion hole **30** of the external connection portion **16**, that is, on the right side of the bolt insertion hole **56**. The battery-side accommodating portion **54** is not provided with the bottom wall **42**, and the battery connection portion **24** of the terminating bus bar **18***a* accommodated in the battery-side accommodating portion **54** is exposed to the lower side of the case **20** through a lower opening portion **60**. Moreover, a notch-shaped front opening portion **62** is provided in the front portion of the peripheral wall **44** of the external-side accommodating portion **52**, and the external-side accommodating portion **52** opens forward through the front opening portion **62**.

Cover Portion **22**

The cover portion **22** is formed of synthetic resin or the like having insulation properties, and is configured to be fixed to the case **20** in a state of covering the terminating bus bar accommodating portion **38** of the case **20**. That is, in the entire battery wiring module **10** including the portion other than the part A in FIG. **1**, the cover portion **22** extends long in the front-rear direction. As described above, the cover portion **22** includes the locked portion that engages with the locking portion of the case **20** and the locking portion that engages with the locked portion of the case **20**. In particular, in the entire cover portion **22**, the intermediate portion in the front-rear direction comprises a fixing portion **64** that is fixedly mounted on the case **20**. Then, the part A in FIG. **1**, which is the front end portion of the entire cover portion **22**, includes a large lid portion **66** that is attached to the fixing portion **64** and covers the external connection portion **16** of the terminating bus bar **18***a* and the peripheral region of the external connection portion **16**, and a small lid portion **68** that is constituted by a part of the large lid portion **66** and covers the external connection portion **16**. The fixing portion

64 has a thin-plate shape, for example, and includes a locking portion and/or a locked portion on the opposite sides in the left-right direction.

Large Lid Portion 66

The large lid portion 66 is attached to the front of the fixing portion 64 via a first hinge portion 70. The large lid portion 66 is rotatable around the first hinge portion 70 with respect to the fixing portion 64, and is rotatable from a first closed end 71*a* covering the external connection portion 16 and the peripheral region of the external connection portion 16, to a first open end 71*b* exposing the external connection portion 16 and the peripheral region of the external connection portion 16. That is, the state shown in FIG. 5 is a state where the large lid portion 66 is located at the first closed end 71*a* and covers the external connection portion 16 and the peripheral region of the external connection portion 16. Besides, the state shown in FIG. 7 is a state where the large lid portion 66 is located at the first open end 71*b* after rotation, and exposes the external connection portion 16 and the peripheral region of the external connection portion 16. In particular, the battery wiring module 10 has a retainer configured to retain the large lid portion 66 in a state of being located at the first open end 71*b* shown in FIG. 7.

The large lid portion 66 has a shape that can cover the periphery of the external connection portion 16 from above. In a state shown in FIG. 5 where the large lid portion 66 is located at the first closed end 71*a*, the large lid portion 66 includes a large upper wall portion 72 that covers the upper part of the external connection portion 16, and a front wall portion 74 extending downward from the from the front end of the large upper wall portion 72, a pair of side wall portions 76, 76 extending downward from the left and right opposite ends of the large upper wall portion 72, and a rear wall portion 78 extending downward from the large upper wall portion 72 to cover the rear of the external connection portion 16. The large upper wall portion 72 has a thin-plate shape having a thickness dimension approximately equal to that of the fixing portion 64, and extends forward from the fixing portion 64 via the first hinge portion 70. In the front end portion of the large upper wall portion 72, a cylindrical portion 80 projecting upward is provided at the center in the left-right direction, and a large space covered by the large lid portion 66 is obtained. Further, on the outer surface of the side wall portions 76, 76, first locked portions 82, 82 of approximately frame shape that engage with the first locking portions 46, 46 in the case 20 are provided. In a state shown in FIG. 5 where the large lid portion 66 is located at the first closed end 71*a*, the rear wall portion 78 is located forward with respect to the linking portion 26 of the terminating bus bar 18*a*. As will be described later, the rear wall portion 78 prevents tools and the like from coming into contact with the linking portion 26 of the terminating bus bar 18*a* even when the small lid portion 68 is opened during work such as during vehicle maintenance.

First Hinge Portion 70

In Embodiment 1, the first hinge portion 70 includes an elastically deformable urging arm 84 (see FIG. 5) provided at the central portion in the left-right direction of the cover portion 22, and thin-walled portions 86, 86 (see FIG. 6) on the opposite sides in the left-right direction of the urging arm 84. The opposite end portions in the front-rear direction of the urging arm 84 are connected to the fixing portion 64 and the large lid portion 66 (the large upper wall portion 72), and the urging arm 84 is configured to exert an urging force between the fixing portion 64 and the large lid portion 66, as will be described later. A thin-walled section 88 is formed at the linking portion between the urging arm 84 and the fixing portion 64, and a thin-walled section 90 is formed at the linking portion between the urging arm 84 and the large lid portion 66 (the large upper wall portion 72). The thin-walled portions 86, 86 on the opposite sides in the left-right direction of the urging arm 84 are located at the intermediate portion in the front-rear direction of the thin-walled sections 88, 90 located on the opposite sides in the front-rear direction of the urging arm 84. That is, the thin-walled portions 86 are located rearward with respect to the front thin-walled section 90 and forward with respect to the rear thin-walled section 88. With this configuration, the large lid portion 66 can deform so as to bend rearward at the thin-walled portions 86, 86 and at the thin-walled sections 88, 90 with respect to the fixing portion 64. Further, the urging arm 84 is elastically deformable due to the rotational displacement of the large lid portion 66 with respect to the fixing portion 64.

In the cover portion 22, at the rear of the urging arm 84, a deformation permitting space 92 that permits deformation of the urging arm 84 is provided. That is, in the cover portion 22, the deformation permitting space 92 having a concave shape is formed at the rear of the urging arm 84, and as shown in FIG. 5, in the state where the large lid portion 66 is located at the first closed end 71*a*, the urging arm 84 rises upward from the front end portion of the deformation permitting space 92 via the thin-walled section 88. Besides, in the state where the large lid portion 66 is located at the first closed end 71*a*, the urging arm 84 extends rearward from the rear end portion of the large lid portion 66 (the large upper wall portion 72) via the thin-walled section 90. With this configuration, in Embodiment 1, the thin-walled section 90, which is the linking portion between the urging arm 84 and the large lid portion 66, is at the same position as an outer surface 93 of the large lid portion 66 in the height direction (the vertical direction), and the urging arm 84 has an L-letter shape in which the side linked to the fixing portion 64 and the side linked to the large lid portion 66 are orthogonal to each other. Therefore, in Embodiment 1, the first hinge portion 70 is a so-called three-point hinge, and has a plurality of stable positions. Thus, the large lid portion 66 is configured to be held at any one of the stable positions due to the rotational displacement around the first hinge portion 70. In Embodiment 1, the urging arm 84 is molded to have an L-letter shape, and the state where the angle of intersection between the side linked to the fixing portion 64 and the side linked to the large lid portion 66 is 90 degrees is a stable state.

Small Lid Portion 68

The small lid portion 68 is attached to the large upper wall portion 72 of the large lid portion 66 via a second hinge portion 94. The small lid portion 68 is rotatable around the second hinge portion 94 with respect to the large lid portion 66 (the large upper wall portion 72), and is rotatable from a second closed end 95*a* covering the external connection portion 16, to a second open end 95*b* exposing the external connection portion 16. That is, the state shown in FIG. 6 is a state where the small lid portion 68 is located at the second closed end 95*a* and covers the external connection portion 16. Besides, the state shown in FIG. 8 is a state where the small lid portion 68 is located at the second open end 95*b* after rotation, and exposes the external connection portion 16.

As described above, the small lid portion 68 is constituted by a part of the large lid portion 66. Specifically, the small lid portion 68 includes a small upper wall portion 96 comprising a part of the large upper wall portion 72, and the front wall portion 74. That is, in the front portion of the large

upper wall portion **72**, the intermediate portion in the left-right direction comprises the small upper wall portion **96**, and the small upper wall portion **96** is remote from the rear portion of the large upper wall portion **72** and from the opposite end portions in the left-right direction of the front portion of the large upper wall portion **72** by a gap **98** of a predetermined size. The small upper wall portion **96** is linked to the rear portion of the large upper wall portion **72** by the second hinge portion **94**. With this configuration, the small upper wall portion **96** can be rotationally displaced with respect to the rear portion of the large upper wall portion **72**. The aforementioned cylindrical portion **80** is formed on the small upper wall portion **96**. Besides, at the opposite end portions in the left-right direction of the front wall portion **74**, an approximately claw-shaped second locking portion **100** that engages with the second locked portion **48** in the case **20** is provided.

In the initial state shown in FIG. **2** and the like, the small upper wall portion **96** is configured to rotate integrally with the large upper wall portion **72**. Specifically, at the tip portion of the large upper wall portion **72**, the opposite end portions in the left-right direction of the large upper wall portion **72** and the small upper wall portion **96** are linked by a thin-walled friable portion **102**. This prevents the small lid portion **68** (the small upper wall portion **96**) from accidentally rotating when the large lid portion **66** (the large upper wall portion **72**) rotates. Then, during vehicle maintenance or the like, by applying an external force for rotating the small lid portion **68** to break the friable portion **102**, it is possible to rotate the small lid portion **68** to be opened while the large lid portion **66** is closed.

Further, as shown in FIG. **2** and the like, in the state where the small lid portion **68** is located at the second closed end **95***a*, a gap **104** of a predetermined size is formed vertically between the front wall portion **74** of the small lid portion **68** and the bottom wall **42** of the case **20**. That is, the front opening portion **62** provided in the front portion of the peripheral wall **44** of the case **20** is covered from above by the front wall portion **74** of the small lid portion **68**, so that the gap **104** of approximately rectangular shape is formed.

Second Hinge Portion **94**

The second hinge portion **94** linking the small upper wall portion **96** and the rear portion of the large upper wall portion **72** is formed to be thinner than the small upper wall portion **96** and the large upper wall portion **72**, and is elastically deformable. In the initial state shown in FIG. **6** (the state where the small lid portion **68** is located at the second closed end **95***a*), the second hinge portion **94** is curved so as to be convex downward. The second hinge portion **94** is molded in a curved state that is convex downward, and with respect to the elastic deformation due to the opening movement of the small lid portion **68**, which will be described later, the second hinge portion **94** is rotationally displaced, by the elastic recovering deformation, in the direction in which the small lid portion **68** automatically closes. By so doing, the small lid portion **68** is held on the side of the second closed end **95***a* by the elastic recovery force of the second hinge portion **94**. In Embodiment 1, a pair of second hinge portions **94**, **94** are provided at the opposite side portions in the left-right direction at the rear end portion of the small upper wall portion **96** so as to be remote from each other.

Assembly of Battery Wiring Module **10**

Hereinafter, a specific example of the method of assembling the battery wiring module **10** will be described, but the method of assembling the battery wiring module **10** is not limited to the mode described below.

First, the plurality of bus bars **18** including the terminating bus bars **18***a* and the case **20** are prepared, and each bus bar **18** is fixed to the case **20** through fitting by concave and convex portions, locking by the claws, or the like. That is, as shown in FIG. **1**, the plurality of bus bars **18** including the terminating bus bars **18***a* arranged in the front-rear direction are fixed to the case **20** which is long in the front-rear direction. When fixing the terminating bus bar **18***a* and the case **20**, a pin (not shown) may be inserted through the pin insertion holes **30**, **58** of the terminating bus bar **18***a* and the case **20**, so that the terminating bus bar **18***a* and the case **20** are mutually positioned. Subsequently, the bus bars **18** including the terminating bus bars **18***a* and the case **20** are placed on the cell group **14** in which the cells **12** are arranged side by side. Then, the electrode terminal **32** of each cell **12** is inserted through the electrode terminal insertion hole **34** of the corresponding bus bar **18**, and the nut **36** is fastened. By so doing, the cell group **14** comprising the plurality of cells **12** is linked to the intermediate portion in the front-rear direction of the case **20**, and the cell **12** and the corresponding bus bar **18** are electrically connected. In this state, in the part A in FIG. **1**, the front end portion of the battery wiring module **10** is positioned so as to project forward with respect to the cell group **14**. As described above, the method of electrically connecting the cell and the bus bar is not limited to the fastening of bolts and nuts.

Subsequently, the cover portion **22** is attached from above to the terminating bus bar accommodating portion **38** of the case **20**. Specifically, the cover portion **22** is attached to the case **20** by the locking portion and/or the locked portion provided to the outer surface of the peripheral wall **44** of the case **20** and the locked portion and/or the locking portion provided to the cover portion **22** being engaged. At this time, the first locking portion **46** and the first locked portion **82**, and the second locking portion **100** and the second locked portion **48** provided to the front end portion of the battery wiring module **10** may be engaged or do not have to be engaged with each other. By attaching the cover portion **22** to the case **20** to which the cells **12** (the cell group **14**) are linked in this way, the battery wiring module **10** of Embodiment 1 is completed.

The front end portion of the battery wiring module **10** to which the cell group **14** is linked to the intermediate portion in the front-rear direction as described above is placed on and fixed to a fixing member **106** such as a cabinet located in front of the cell group **14**. As shown in FIG. **5**, the fixing member **106** includes a fixing bolt **108** projecting upward, and the fixing bolt **108** is inserted through the bolt insertion hole **56** of the case **20** and the bolt insertion hole **28** of the external connection portion **16** of the terminating bus bar **18***a*, then a nut **110** is fastened thereto. By so doing, the cell group **14** is configured to be fixed to the cabinet. When the nut **110** is fastened to the fixing bolt **108**, a pin (not shown) may be inserted through the pin insertion holes **30**, **58** of the terminating bus bar **18***a* and the case **20**, so that the terminating bus bar **18***a* and the case **20** do not integrally rotate with the nut **110**.

When the front end portion of the battery wiring module **10** is fixed to the fixing member **106** in this way, the large lid portion **66** rotationally displaces around the first hinge portion **70** to be located at the first open end **71***b* as shown in FIG. **7**, and the large lid portion **66** is held at the first open end **71***b* by the retainer. At that time, as described above, the small upper wall portion **96** of the small lid portion **68** is linked to opposite end portions in the left-right direction of the large upper wall portion **72** by the friable portions **102**,

102. Thus, the small lid portion **68** and the large lid portion **66** integrally rotate so as to be located at the first open end **71***b*.

Here, the first hinge portion **70** includes the urging arm **84** at the center in the left-right direction and the thin-walled portions **86** on the opposite sides in the left-right direction of the urging arm **84**. That is, the rotation fulcrum of the urging arm **84** exists in the thin-walled section **88** that is linked to the fixing portion **64**, and the rotation fulcrum of the opposite side portions in the left-right direction of the urging arm **84** exists in the thin-walled portions **86**, **86**. The moving fulcrum of the large lid portion **66** that is pulled and moves due to the deformation of the urging arm **84** exists in the thin-walled section **90** that is the linking portion between the urging arm **84** and the large lid portion **66**.

As described above, such a first hinge portion **70** is a so-called three-point hinge, and the deformation mechanism is only briefly explained. The urging arm **84** of the first hinge portion **70** is in a stable position where the angle of intersection is 90 degrees. Then, by the large lid portion **66** located at the first closed end **71***a* being rotationally displaced around the first hinge portion **70**, the urging arm **84** undergoes tensile deformation until the urging arm **84** passes an intermediate position **71***c* between the first closed end **71***a* and the first open end **71***b* (shown by a chain double-dashed line in FIG. **7**) due to rotational action around the thin-walled portions **86** on the left and right opposite sides or the like, and in the urging arm **84**, the angle of intersection between the side linked to the fixing portion **64** and the side linked to the large lid portion **66** is made larger than 90 degrees. Then, after the large lid portion **66** passes the intermediate position **71***c*, the urging arm **84** elastically recovers in the direction in which the angle of intersection returns to 90 degrees, and the large lid portion **66** becomes stable at the first open end **71***b* as shown in FIG. **7**. That is, when the large lid portion **66** is opened, the large lid portion **66** is subjected to an urging force exerted by the urging arm **84** from the intermediate position **71***c* toward the first open end **71***b*, that is, toward the fixing portion **64**, and is held at the first open end **71***b*. Therefore, in Embodiment 1, the retainer that retains the large lid portion **66** in a state of being located at the first open end **71***b* shown in FIG. **7** is constituted by the urging arm **84**.

By fastening the nut **110** to the fixing bolt **108** with the large lid portion **66** held in the open state in this way, the battery wiring module **10** to which the cell group **14** is linked is fixed to the fixing member **106** such as a cabinet. At that time, a conductor **112** such as a bus bar for connecting to a terminal portion provided to the end of the external electric wire or another cell group is linked to the fixing bolt **108** and the nut **110** is fastened, so that the external connection portion **16** of the terminating bus bar **18***a* and the conductor **112** are electrically connected. Subsequently, the large lid portion **66** is rotationally displaced around the first hinge portion **70** to be positioned at the first closed end **71***a*, so that the external connection portion **16** of the terminating bus bar **18***a* is covered and protected by the large lid portion **66**. When the large lid portion **66** is closed, the large lid portion **66** is subjected to an urging force exerted by the urging arm **84** from the intermediate position **71***c* toward the first closed end **71***a*, and is held at the first closed end **71***a*. In particular, in a state where the large lid portion **66** is located at the first closed end **71***a*, by the first locking portion **46** and the first locked portion **82**, and/or the second locking portion **100** and the second locked portion **48** being engaged with each other, the large lid portion **66** is more reliably held at the first closed end **71***a*, thereby preventing the external connection portion **16** of the terminating bus bar **18***a* from being accidentally exposed. In the state where the large lid portion **66** is located at the first closed end **71***a*, the conductor **112** electrically connected to the external connection portion **16** of the terminating bus bar **18***a* extends to the outside through the gap **104** between the small lid portion **68** and the case **20**.

Then, during vehicle maintenance or the like, the engagement between the second locking portion **100** and the second locked portion **48** is released, and an external force in the direction of rotating around the second hinge portion **94** is exerted on the small lid portion **68**, so as to break the friable portions **102**, **102**. This makes it possible to rotate the small lid portion **68** independently of the rear portion and the opposite end portions in the left-right direction of the large lid portion **66** due to the elastic deformation of the second hinge portion **94**, so that the small lid portion **68** can rotate to reach the second open end **95***b* shown in FIG. **8**. As a result, the external connection portion **16** of the terminating bus bar **18***a* can be exposed, and the maintenance work can be performed. The second hinge portion **94** is in a stable position with the small lid portion **68** located at the second closed end **95***a* shown in FIG. **6**. By displacing the small lid portion **68** to the second open end **95***b* as shown in FIG. **8**, the second hinge portion **94** is configured to exert an elastic recovery force on the small lid portion **68** as an urging force in the direction toward the second closed end **95***a*. As a result, by releasing the external force on the small lid portion **68**, the small lid portion **68** automatically displaces to the second closed end **95***a* due to the elastic recovering action of the second hinge portion **94**. Then, after the small lid portion **68** moves to the second closed end **95***a*, the maintenance work is completed by engaging the second locking portion **100** with the second locked portion **48**. Such rotation of the small lid portion **68** around the second hinge portion **94**, that is, displacement to the second open end **95***b* and retaining at the second closed end **95***a*, can be performed with the conductor **112**, which is electrically connected to the external connection portion **16** of the terminating bus bar **18***a*, extending from the gap **104** to the outside.

According to the battery wiring module **10** of Embodiment 1 as described above, when the cell group **14** is fixed to the fixing member **106** such as a cabinet, the large lid portion **66** is rotationally displaced around the first hinge portion **70** to the first open end **71***b*, so that the external connection portion **16** of the terminating bus bar **18***a* can be largely exposed, thereby facilitating fastening operation of the nut **110** to the fixing bolt **108**. In particular, in Embodiment 1, the retainer (the urging arm **84**) that retains the large lid portion **66** at the first open end **71***b* is provided. Thus, it is not necessary for an operator to retain the large lid portion **66** in an open state, for example, thereby further improving workability. Besides, during vehicle maintenance, the small lid portion **68** is rotationally displaced to the second open end **95***b* independently of the large lid portion **66** around the second hinge portion **94**, so that the external connection portion **16** of the terminating bus bar **18***a* can be exposed small. By so doing, the risk that the tool or the operator may accidentally touch the terminating bus bar **18***a* and receive an electric shock can be reduced. As a result, it is possible to achieve both improvement in safety during vehicle maintenance and improvement in workability during vehicle manufacture.

In the battery wiring module **10**, the retainer that retains the large lid portion **66** at the first open end **71***b* is the urging arm **84** that constitutes a so-called three-point hinge. Therefore, it is not necessary to provide another member as a retainer for retaining the large lid portion **66** at the first open

end **71***b*, thereby reducing the number of parts and simplifying the structure. Further, the urging arm **84** automatically moves to the first open end **71***b* or the first closed end **71***a* by passing the intermediate position, so that the labor of the operator can also be reduced.

In Embodiment 1, the urging arm **84** has an L-letter shape. The urging arm **84** extends straight rearward from the large lid portion **66**, and the linking portion to the fixing portion **64** (the thin-walled section **88**) is located inside with respect to the outer surface of the large lid portion **66** in the height direction (the vertical direction). With this configuration, the urging arm **84** is inhibited from projecting upward from the cover portion **22**.

The conductor **112** electrically connected to the external connection portion **16** of the terminating bus bar **18***a* extends to the outside from the gap **104** between the front wall portion **74** of the small lid portion **68** and the bottom wall **42** in the case **20**. With this configuration, the small lid portion **68** can be opened and closed with the conductor **112** extending to the outside from the gap **104**. As a result, for example, the small lid portion **68** can be opened to perform maintenance work without releasing the electrical connection between the terminating bus bar **18***a* and the conductor **112**. Further, the small lid portion **68** automatically displaces to the second closed end **95***a* side by releasing the external force toward the second open end **95***b* side due to the elastic recovery force of the second hinge portion **94**. Therefore, the risk that the operator unintentionally touches the external connection portion **16** of the terminating bus bar **18***a* and receives an electric shock can be further reduced, and the labor of the operator for closing the small lid portion **68** can also be reduced.

Embodiment 2

Hereinafter, a battery wiring module **120** according to a second embodiment of the present disclosure will be described with reference to FIGS. **9** and **10**. The battery wiring module **120** of Embodiment 2 has the same basic structure as the battery wiring module **10** according to Embodiment 1. However, in comparison with the battery wiring module **10** according to Embodiment 1, in a first hinge portion **122**, an urging arm **124** serving as a retainer has a different structure. In the following description, the parts different from those in the battery wiring module **10** described in Embodiment 1 will be mainly described, and the components and parts that are substantially identical with those in Embodiment 1 will be assigned like symbols in the drawings and not described in any detail.

In Embodiment 1, the thin-walled section **90**, which is the linking portion between the urging arm **84** and the large lid portion **66**, exists at the same height position (the position in the vertical direction) as the outer surface **93** of the large lid portion **66**. However, in Embodiment 2, a thin-walled section **126**, which is the linking portion between the urging arm **124** and the large lid portion **66**, exists inside in the height direction (on the lower side) with respect to the outer surface **93** of the large lid portion **66**. The height position of the thin-walled section **126** is set according to, for example, the amount of rotation of the large lid portion **66**, an external force required for rotation, and the like, and is not limited. In Embodiment 2, the thin-walled section **126** exists at approximately the same height as the thin-walled section **88**, which is the linking portion between the urging arm **124** and the fixing portion **64**. The urging arm **124** links the thin-walled sections **126**, **88** at the front and at the rear. In Embodiment 2, the urging arm **124** is curved so as to be convex outward in the height direction (to the upper side) in a state where the large lid portion **66** is located at the first closed end **71***a* (a state shown in FIG. **9**).

In the battery wiring module **120** of Embodiment 2 including the urging arm **124** having such a structure as well, by the large lid portion **66** being rotationally displaced around the first hinge portion **122** to the first open end **71***b*, the large lid portion **66** is held in an open state by the urging arm **124** serving as the retainer as shown in FIG. **10**. By so doing, the same effect as that of the battery wiring module **10** of Embodiment 1 can be exhibited in the battery wiring module **120** of Embodiment 2.

In particular, in Embodiment 2, the thin-walled sections **126**, **88**, which are the opposite end portions of the urging arm **124**, are both located inside in the height direction (on the lower side) with respect to the outer surface **93** of the large lid portion **66**. Thus, it is also possible to further suppress the upward protrusion of the urging arm **124** from the cover portion **22**. Besides, by making the urging arm **124** a curved shape, it is easy to sufficiently obtain the length dimension of the urging arm **124**, thereby improving the degree of freedom of design. With this configuration, the shape of the urging arm **124** can be appropriately designed according to the rotation amount of the large lid portion **66**, the external force required for the rotation, and the like.

Embodiment 3

Hereinafter, a battery wiring module **130** according to Embodiment 3 of the present disclosure will be described with reference to FIGS. **11** to **13**. In Embodiments 1 and 2, the first hinge portions **70**, **122** are three-point hinges, and the retainers are the urging arms **84**, **124** constituting the three-point hinge. However, in Embodiment 3, the structure of a first hinge portion **132** is different from those of the first hinge portions **70**, **122** in Embodiments 1 and 2. That is, in Embodiment 3, the first hinge portion **132** includes the thin-walled portions **86**, **86** that link the fixing portion **64** and a large lid portion **134** on the opposite side portions in the left-right direction of the cover portion **22**.

A retainer that retains the large lid portion **134** at the first open end **71***b* is provided at the central portion in the left-right direction of the cover portion **22**. In Embodiment 3, the retainer includes an engaging projection portion **136** projecting rearward from the large lid portion **134** and an engage target portion **138** provided on the terminating bus bar **18***a*, which is the member on the case **20** side. Specifically, a concave displacement permitting space **140** is provided at the central portion in the left-right direction at the front end portion of the fixing portion **64**, and as shown in FIG. **12**, the engaging projection portion **136** projects from the central portion in the left-right direction at the rear end portion of the large lid portion **134** toward the displacement permitting space **140**. The rear end portion of the engaging projection portion **136** is bent downward, so that the engaging projection portion **136** has an approximately hook shape.

By rotating the large lid portion **134** having such a shape around the first hinge portion **132** toward the first open end **71***b*, as shown in FIG. **13**, when the large lid portion **134** is located at the first open end **71***b*, the engaging projection portion **136** is brought into pressure contact and engaged with the corner portion of the linking portion **26** of the terminating bus bar **18***a*. Accordingly, the large lid portion **134** is configured to be held at the first open end **71***b*. Therefore, in Embodiment 3, the engage target portion **138** is constituted by the corner portion of the linking portion **26** of the terminating bus bar **18***a*.

In the battery wiring module **130** of Embodiment 3 constructed in the above manner as well, the large lid portion **134** is held by the retainer (the engaging projection portion **136** and the engage target portion **138**) at the first open end **71***b*. Therefore, the same effect as those of Embodiments 1 and 2 can be exhibited. In particular, in Embodiment 3, a retaining force for retaining the large lid portion **134** at the first open end **71***b* can be obtained by the physical engaging force between the engaging projection portion **136** and the engage target portion **138**. Thus, the large lid portion **134** can be stably held at the first open end **71***b*.

Embodiment 4

Hereinafter, a battery wiring module **150** according to Embodiment 4 of the present disclosure will be described with reference to FIGS. **14** to **17**. In Embodiment 4, a first hinge portion **152** of the battery wiring module **150** includes the thin-walled portions **86**, **86** on the opposite side portions in the left-right direction of the cover portion **22** and a butterfly hinge portion **154** provided at the central portion in the left-right direction thereof. The butterfly hinge portion **154** has a structure of a so-called butterfly hinge, and the butterfly hinge portion **154** of Embodiment 4 will be briefly described below.

In Embodiment 4, a pair of through holes **156**, **156** are provided in the central portion in the left-right direction between the fixing portion **64** and the large lid portion **66** in the front-rear direction. The through holes **156**, **156** are remote from each other in the left-right direction and penetrate the cover portion **22** in the plate thickness direction (the vertical direction). Each through hole **156** has a portion having an approximately trapezoidal shape in plan view shown in FIG. **15**. The front-rear dimensions (the left-right dimensions in FIG. **15**) of the portions of the two through holes **156**, **156** that are close to each other are shortened, while the front-rear dimensions of the portions of the two through holes **156**, **156** that are remote from each other are lengthened. Besides, the thin-walled portions **86**, **86** linking the fixing portion **64** and the large lid portion **66** are provided on the outer sides in the left-right direction of the two through holes **156**, **156**.

In each of these through holes **156**, a thin-plate portion **158** linking the large lid portion **66** at the front and the fixing portion **64** at the rear is provided. With this configuration, the front-rear dimensions of the portions of the two thin-plate portions **158**, **158** that are close to each other are shortened, while the front-rear dimensions of the portions of the two thin-plate portions **158**, **158** that are remote from each other are lengthened. The two thin-plate portions **158**, **158** are both elastically deformable in the thickness direction due to the rotational displacement of the large lid portion **66**, and form a so-called butterfly hinge. The portion between the two through holes **156**, **156** in the left-right direction is as thin as the thin-plate portion **158**, and the portion between the two through holes **156**, **156** in the left-right direction is also elastically deformable.

That is, as shown in FIG. **16**, in a state where the large lid portion **66** is located at the first closed end **71***a*, each thin-plate portion **158** is curved so as to be convex outward in the height direction (the vertical direction). By rotating such a large lid portion **66** around the first hinge portion **152** to the first open end, as shown in FIG. **17**, each thin-plate portion **158** is elastically deformed so that the direction of curve is the reverse direction, namely, is configured to be curved so as to be convex inward. In such a butterfly hinge, the elastically deformable portions have different lengths on the inside and the outside, and the butterfly hinge takes different stable positions by its direction of curve being reversed. Therefore, the large lid portion **66** is configured to be held at the first open end **71***b* by each thin-plate portion **158** being elastically deformed such that its direction of curve is reversed. Therefore, in Embodiment 4, the retainer that retains the large lid portion **66** at the first open end **71***b* includes the two thin-plate portions **158**, **158** constituting the butterfly hinge portion **154**. Note that the two through holes **156**, **156** are not essential, and for example, the two thin-walled portions **86**, **86** may extend from the outer sides in the left-right direction of the two thin-plate portions **158**, **158**.

The battery wiring module **150** of Embodiment 4 having the above-mentioned structure can also exhibit the same effects as those of Embodiments 1 to 3. In Embodiment 4, a butterfly hinge is adopted for the first hinge portion **152**, and the large lid portion **66** can be held in a stable position of either the first open end **71***b* or the first closed end **71***a* due to rotation of the large lid portion **66**.

Variation

Although Embodiments 1 to 4 have been described in detail as specific examples of the present disclosure, the present disclosure is not limited by these specific descriptions. Modifications, improvements, etc. to the extent that the object of the present disclosure can be achieved are included in the present disclosure. For example, the following Variations of the embodiment are also included in the technical scope of the present disclosure.

(1) In the preceding embodiments, the retainer is constituted by the urging arms **84**, **124**, the engaging projection portion **136** and the engage target portion **138**, and the thin-plate portion **158** constituting the butterfly hinge. That is, in the preceding embodiments, the retainer is constituted by a part of the battery wiring modules **10**, **120**, **130**, **150**, more specifically, a part of the cover portion **22**. However, for example, the retainer that retains the large lid portion at the first open end may be provided to the case constituting the battery wiring module, or may be constituted by a member different from the case and the bus bar. That is, the hinge structure of the first hinge portion is not limited to the three-point hinge and the butterfly hinge exemplified in the preceding embodiments, and any conventionally known hinge structure can be adopted.

(2) In Embodiment 3, the engage target portion that engages with the engaging projection portion of the large lid portion is not limited to the corner portion of the linking portion of the terminating bus bar **18***a*, and may be another portion of the terminating bus bar **18***a*, or may be the case.

(3) The specific shape of the case, the cover portion, and the bus bar is not limited, and may be appropriately designed or changed depending on the arrangement mode of the plurality of cells (the cell group) and the like.

(4) As described above, the present disclosure discloses the specific structure of the part A in FIG. **1** (the connection portion between the terminal portion of the cell group **14** and the battery wiring module **10**). For example, in FIG. **1**, the specific structures of the intermediate portion in the front-rear direction of the battery wiring module **10** extending in the front-rear direction and the end portion on the side opposite to the part A (the rear end portion) are not limited. For example, in the battery wiring module **10**, the end portion on the side opposite to the part A (the rear end portion) may have or need not have the structure according to the present disclosure.

(5) In the preceding embodiments, the battery wiring modules **10**, **120**, **130**, **150** are fixed to the fixing member **106** by the nut **110** being fastened to the fixing bolt **108**

projecting upward from the fixing member **106** such as a cabinet. However, the battery wiring module may be fixed to the fixing member by a fixing bolt being inserted from above into the fixing member having a nut inside to be fastened.

What is claimed is:

1. A battery wiring module configured to be mounted on a cell group in which a plurality of cells are arranged side by side, the battery wiring module comprising:

a plurality of bus bars configured to be electrically connected to the cell group, the bus bars including a terminating bus bar having an external connection portion;

a case of insulation accommodating the plurality of bus bars;

a cover portion mounted on the case to cover the plurality of bus bars, the cover portion comprising:

a fixing portion fixedly mounted on the case,

a large lid portion attached to the fixing portion via a first hinge portion to cover the external connection portion and a peripheral region of the external connection portion of the terminating bus bar, the large lid portion being rotatable around the first hinge portion from a first closed end covering the external connection portion and the peripheral region of the external connection portion, to a first open end exposing the external connection portion and the peripheral region of the external connection portion, and

a small lid portion constituted by a part of the large lid portion and attached to the large lid portion via a second hinge portion to cover the external connection portion, the small lid portion being rotatable around the second hinge portion from a second closed end covering the external connection portion, to a second open end exposing the external connection portion; and

a retainer configured to retain the large lid portion at the first open end, wherein

the small lid portion is rotatable to the second open end with the large lid portion retained at the first closed end.

2. The battery wiring module according to claim **1**, wherein

the retainer includes an urging arm whose opposite end portions are linked to the fixing portion and the large lid portion, the urging arm being configured to exert an urging force between the fixing portion and the large lid portion,

the urging arm is elastically deformable due to rotational displacement of the large lid portion with respect to the fixing portion, and the urging arm undergoes tensile deformation until passing an intermediate position between the first closed end and the first open end, and

after passing the intermediate position, the urging arm elastically recovers such that the urging arm exerts the urging force urging the large lid portion toward the fixing portion to retain the large lid portion at the first open end.

3. The battery wiring module according to claim **2**, wherein the urging arm has an L-letter shape in which a side linked to the fixing portion and a side linked to the large lid portion are orthogonal to each other.

4. The battery wiring module according to claim **2**, wherein a linking portion of the urging arm to the large lid portion is located inside in a height direction with respect to an outer surface of the large lid portion, and the urging arm has a curved shape that is convex outward in the height direction.

5. The battery wiring module according to claim **1**, wherein

the retainer includes a plate portion whose opposite end portions are linked to the fixing portion and the large lid portion, the plate portion constituting a butterfly hinge that is elastically deformable due to rotational displacement of the large lid portion with respect to the fixing portion,

in a state where the large lid portion is located at the first closed end, the plate portion is curved to be convex outward in a height direction, and

the large lid portion is configured to be held at the first open end by the plate portion being elastically deformed such that a direction of curve of the plate portion is reversed.

6. The battery wiring module according to claim **1**, wherein

the retainer includes an engaging projection portion located on a side of the first hinge portion while projecting from the large lid portion, and an engage target portion provided on a side of the case, and

when the large lid portion is located at the first open end, the engaging projection portion is brought into pressure contact and engaged with the engage target portion such that the large lid portion is held at the first open end.

7. The battery wiring module according to claim **1**, wherein

the external connection portion is configured to be connected to a conductor, and

in a state where the small lid portion is located at the second closed end, a gap is formed between the small lid portion and the case, and the small lid portion is held at the second closed end with the conductor extending from the gap to an outside.

8. The battery wiring module according to claim **1**, wherein the small lid portion is permitted to be displaced toward a side of the second open end by elastic deformation of the second hinge portion, while the small lid portion is configured to be held on a side of the second closed end by an elastic recovery force of the second hinge portion.

9. A battery wiring module configured to be mounted on a cell group in which a plurality of cells are arranged side by side, the battery wiring module comprising:

a plurality of bus bars configured to be electrically connected to the cell group, the bus bars including a terminating bus bar having an external connection portion;

a case of insulation accommodating the plurality of bus bars;

a cover portion mounted on the case to cover the plurality of bus bars, the cover portion comprising:

a fixing portion fixedly mounted on the case,

a large lid portion attached to the fixing portion via a first hinge portion to cover the external connection portion and a peripheral region of the external connection portion of the terminating bus bar, the large lid portion being rotatable around the first hinge portion from a first closed end covering the external connection portion and the peripheral region of the external connection portion, to a first open end exposing the external connection portion and the peripheral region of the external connection portion, and

a small lid portion constituted by a part of the large lid portion and attached to the large lid portion via a second hinge portion to cover the external connec-

tion portion, the small lid portion being rotatable around the second hinge portion from a second closed end covering the external connection portion, to a second open end exposing the external connection portion; and

a retainer configured to retain the large lid portion at the first open end, wherein

an endmost portion of the small lid portion extending toward a front side of the battery wiring module is rotationally displaceable independently from an endmost portion of the large lid portion extending toward the front side of the battery wiring module.

* * * * *