US 20250276843A1

(19) United States
(12) Patent Application Publication
Chen et al.
(10) Pub. No.: US 2025/0276843 A1
(43) Pub. Date: Sep. 4, 2025

(54) **WARDROBE BOX AND HANGER SUPPORT MEMBER THEREFOR**

(71) Applicant: **Pratt Corrugated Holdings, Inc.**, Brookhaven, GA (US)

(72) Inventors: **Shifeng Chen**, Newport News, VA (US); **Greg Sollie**, Sharpsburg, GA (US); **Hannah Conrad**, Memphis, TN (US); **Randy Ball**, Peachtree City, GA (US)

(21) Appl. No.: **19/213,292**

(22) Filed: **May 20, 2025**

Related U.S. Application Data

(63) Continuation of application No. 18/540,343, filed on Dec. 14, 2023, now Pat. No. 12,351,385, which is a continuation of application No. 17/548,772, filed on Dec. 13, 2021, now Pat. No. 11,878,857.

(60) Provisional application No. 63/127,602, filed on Dec. 18, 2020.

Publication Classification

(51) **Int. Cl.**

B65D 85/18	(2006.01)
B31B 50/26	(2017.01)
B31B 110/35	(2017.01)
B65D 5/02	(2006.01)
B65D 5/468	(2006.01)
B65D 5/50	(2006.01)

(52) **U.S. Cl.**

CPC ***B65D 85/185*** (2013.01); ***B31B 50/26*** (2017.08); ***B65D 5/0254*** (2013.01); ***B65D 5/4608*** (2013.01); ***B65D 5/5059*** (2013.01); *B31B 2110/35* (2017.08)

(57) **ABSTRACT**

A wardrobe box assembly includes a hanger support member; and a wardrobe box having a sidewall enclosure including a first side panel and a second side panel opposite the first side panel; a first box mounting slot defined at a top edge of the first side panel and configured to engage the hanger support member, the first box mounting slot extending into an outer surface of the first side wall panel from a first mounting slot opening defined at the top edge of the first side wall panel; and a second box mounting slot defined at a top edge of second side panel and configured to engage the hanger support member, the second box mounting slot extending into an outer surface of the second side wall panel from a second mounting slot opening defined at the top edge of the second side wall panel.

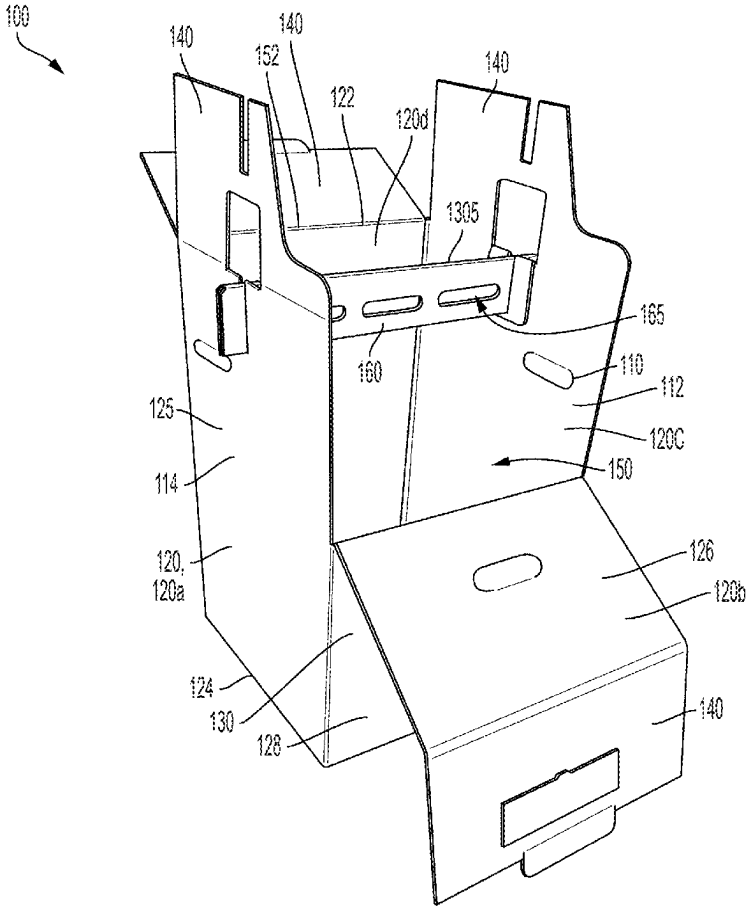

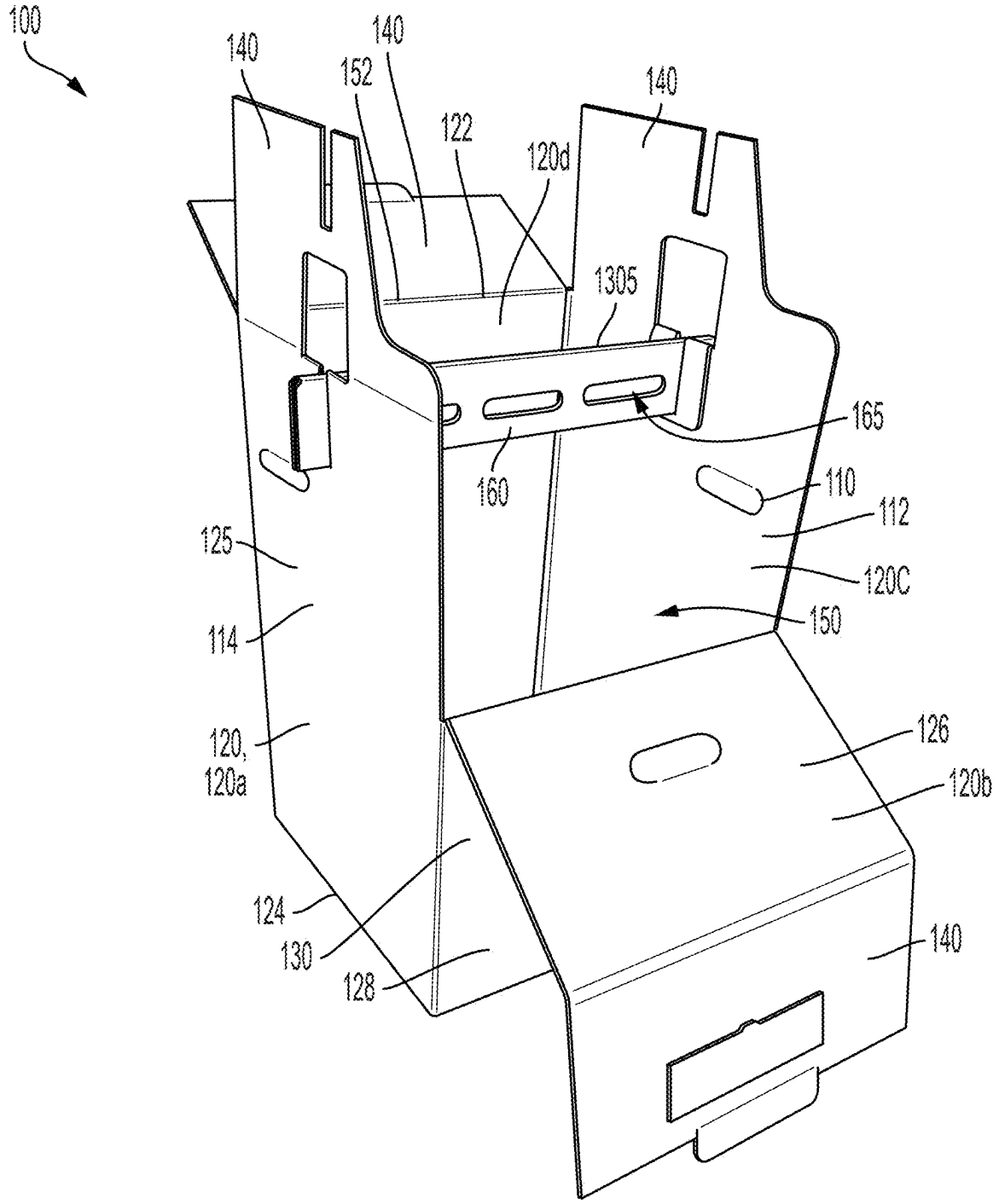
100
140
140
152
122
120d
140
1305
165
160
110
112
125
120C
114
150
120,
120a
126
120b
124
130
128
140

FIG. 1

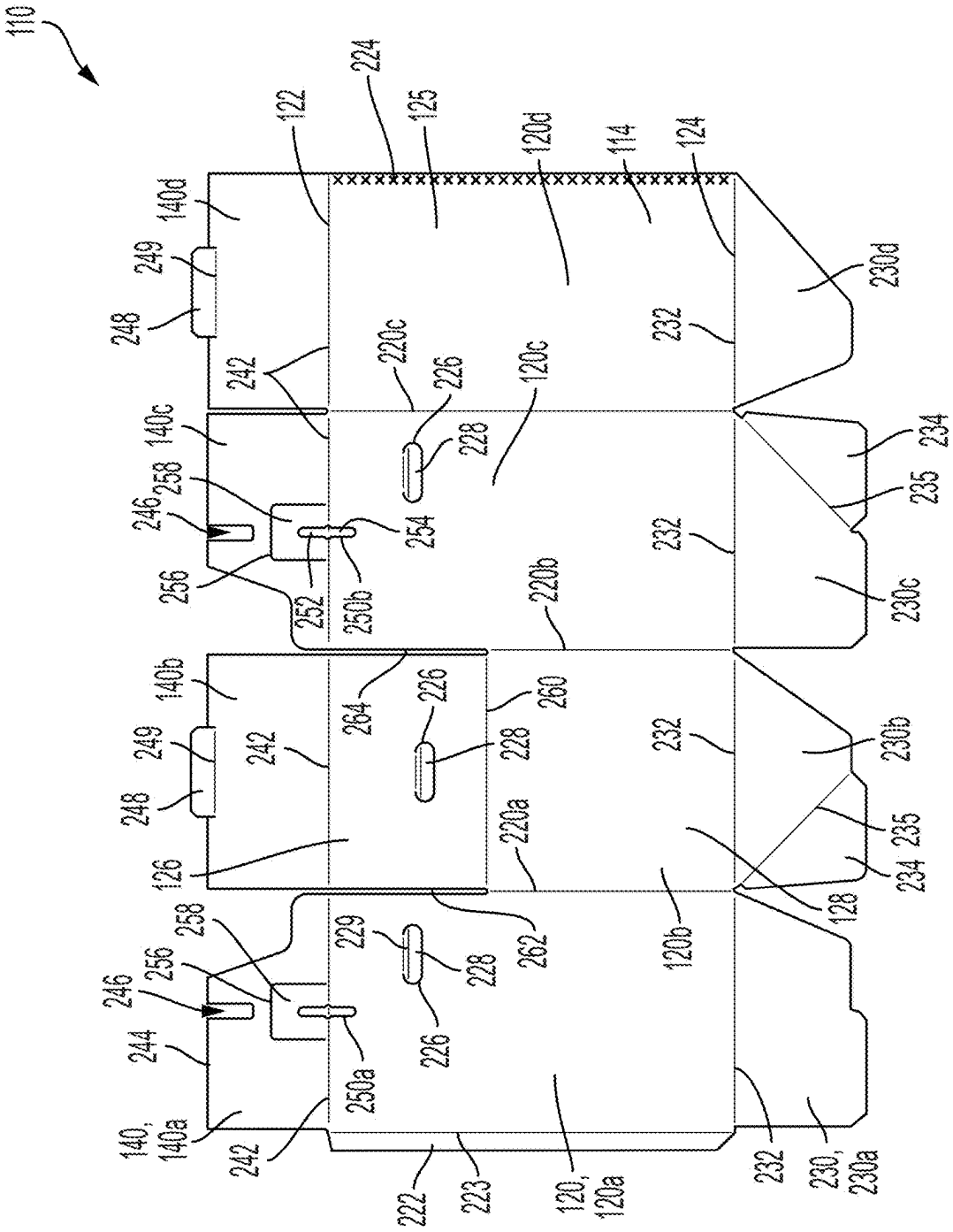
110
122
224
125
120d
114
124
140d
249
248
242
220c
226
120c
232
230d
140c
228
234
246
258
254
235
256
252
250b
220b
230c
140b
264
260
230b
126
220a
128
229
262
120b
244
250a
140,
140a
222
223
120,
120a
230,
230a

FIG. 2

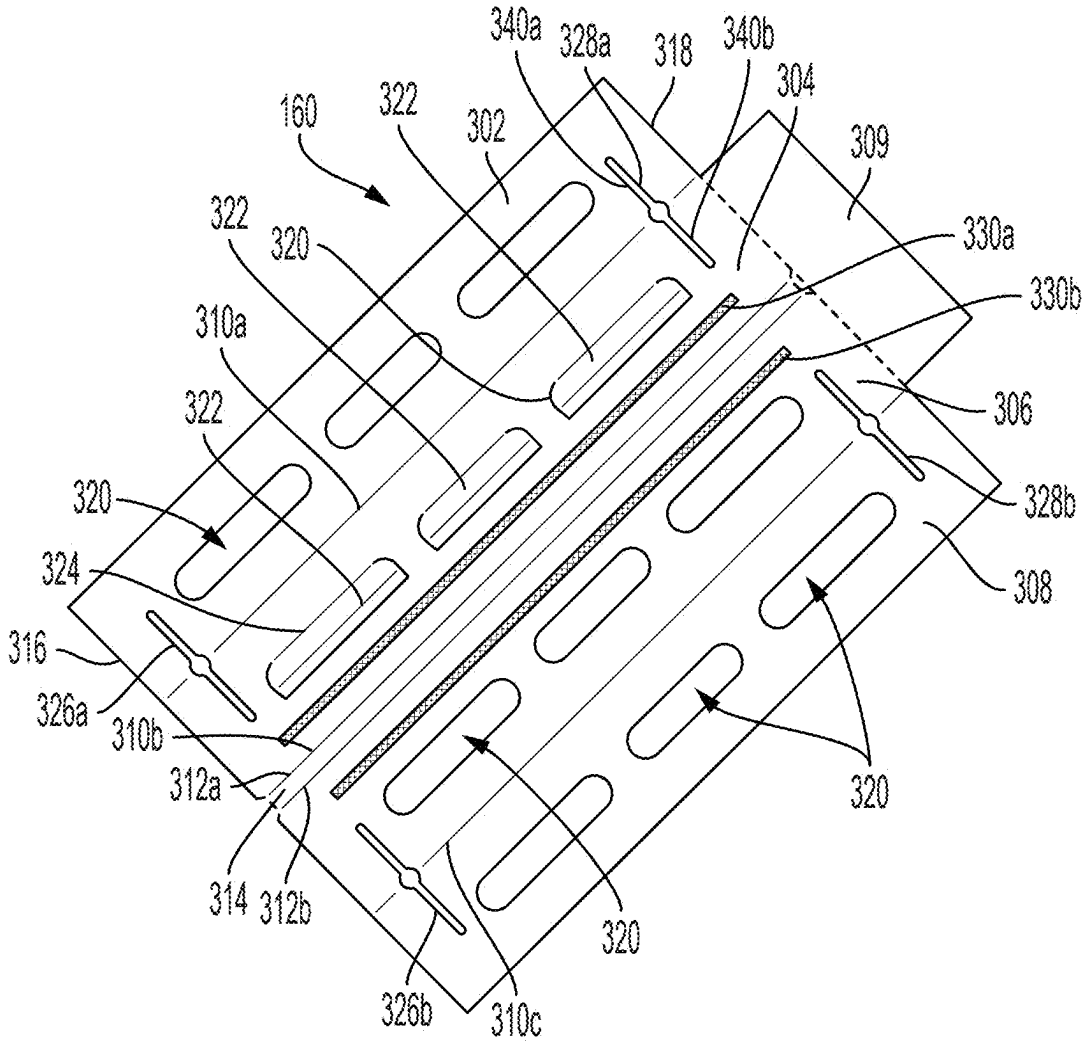
340a
328a
318
340b
304
160
322
302
309
322
320
330a
330b
310a
306
322
320
328b
324
308
316
326a
310b
312a
320
314
312b
320
326b
310c

FIG. 3

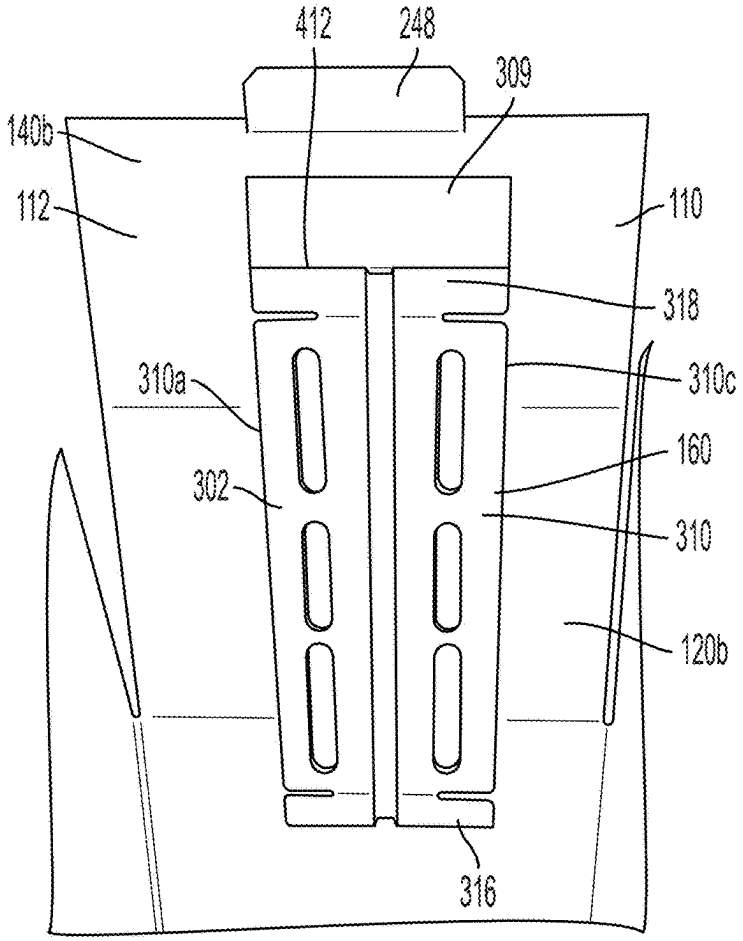
412
248
309
140b
112
110
318
310a
310c
160
302
310
120b
316

FIG. 4

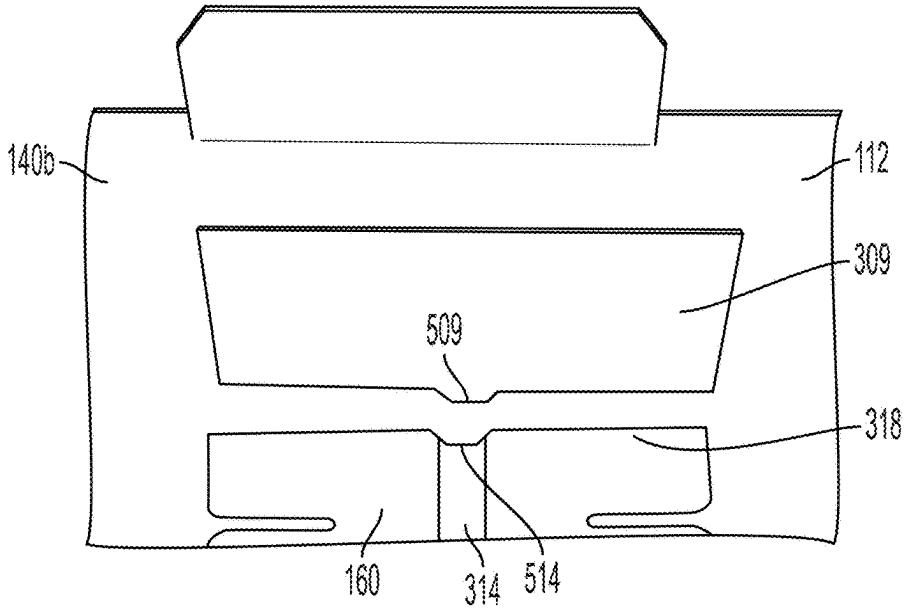
140b
112
309
509
318
160
314
514

FIG. 5

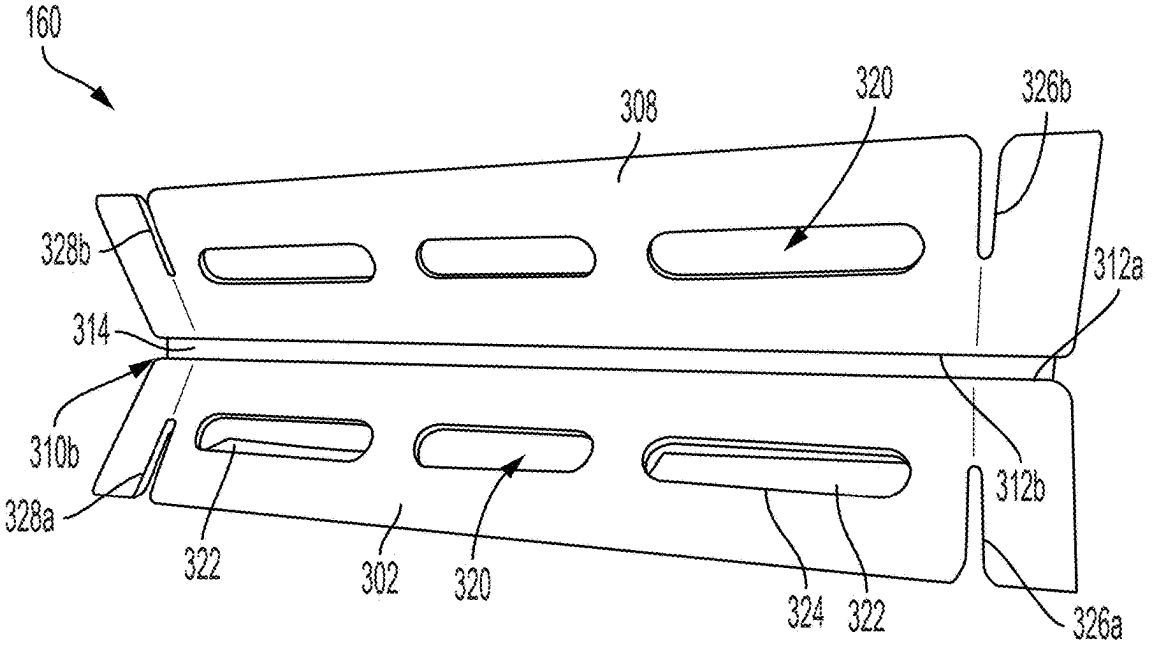
160
308
320
326b
328b
312a
314
310b
312b
328a
322
302
320
324
322
326a

FIG. 6

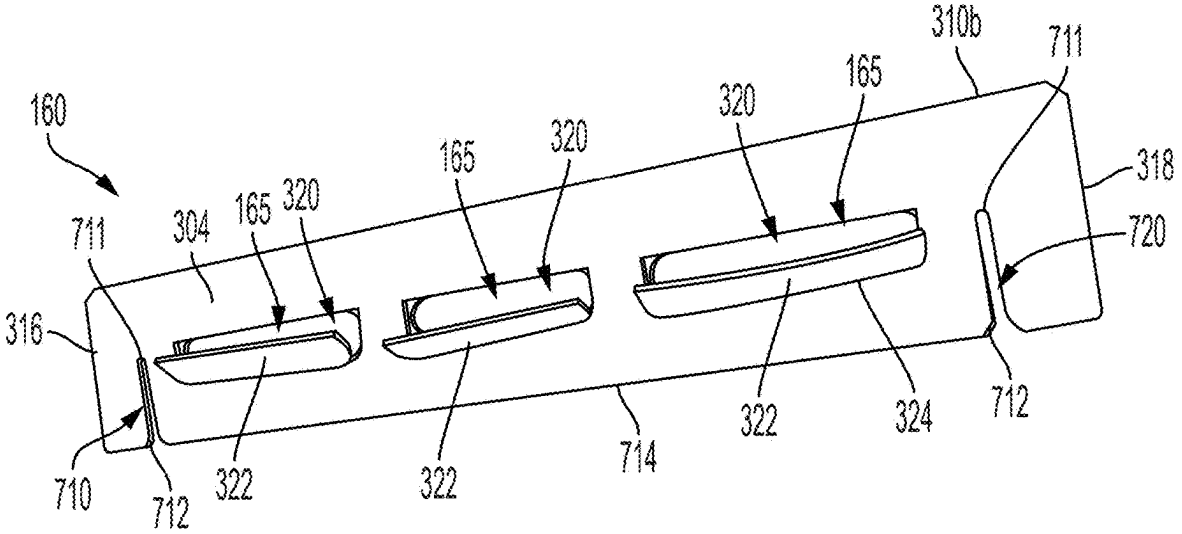
310b
711
165
160
320
320
165
318
711
304
165
320
720
316
322
322
714
322
324
712
710
712

FIG. 7

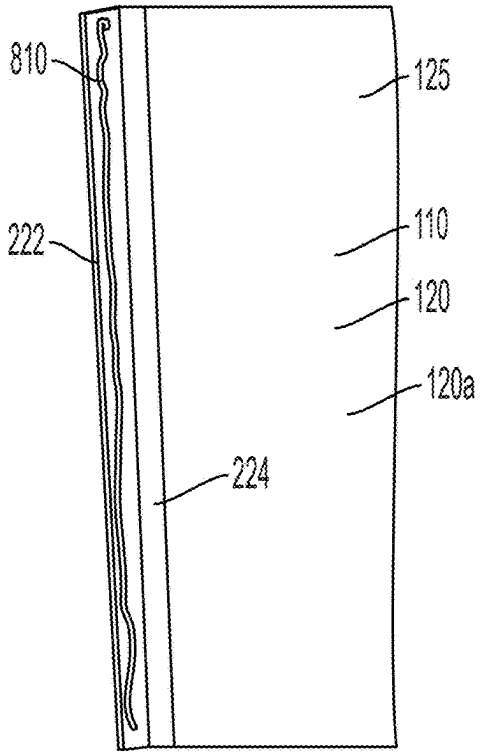
810
125
222
110
120
120a
224

FIG. 8

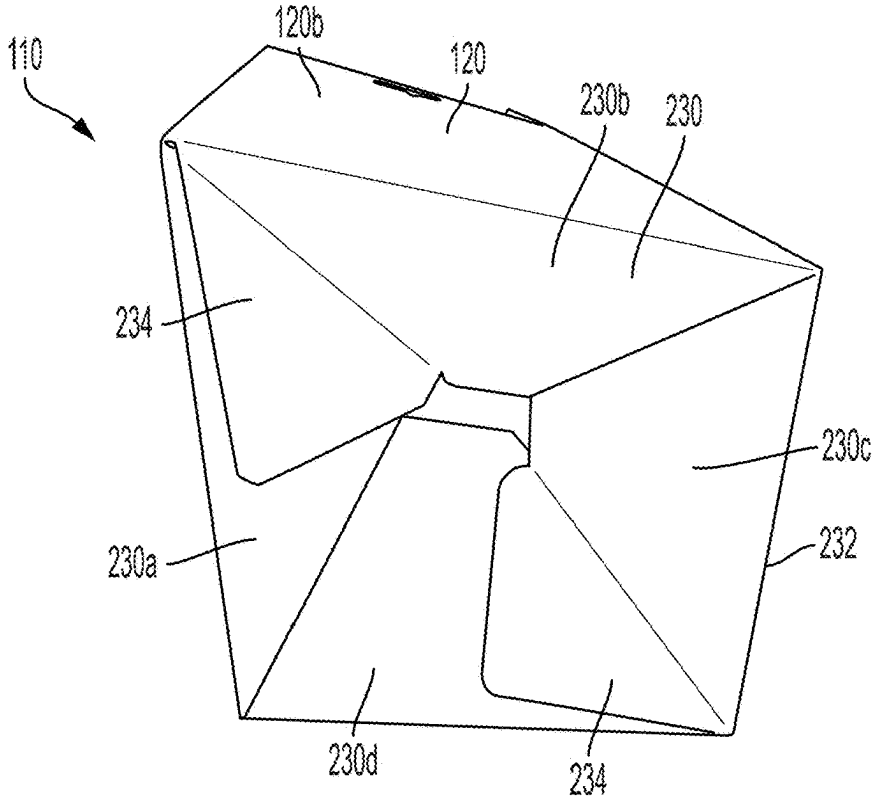
110
120b
120
230b
230
234
230c
230a
232
230d
234

FIG. 9

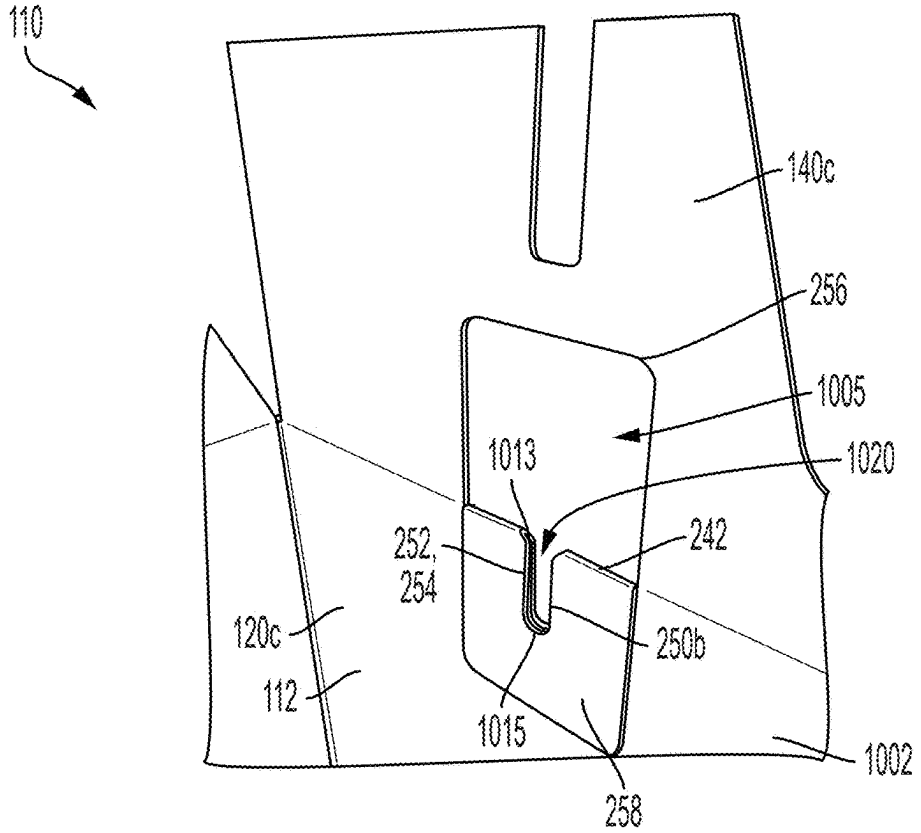
110
140c
256
1005
1013
1020
252,
254
242
120c
250b
112
1015
1002
258

FIG. 10

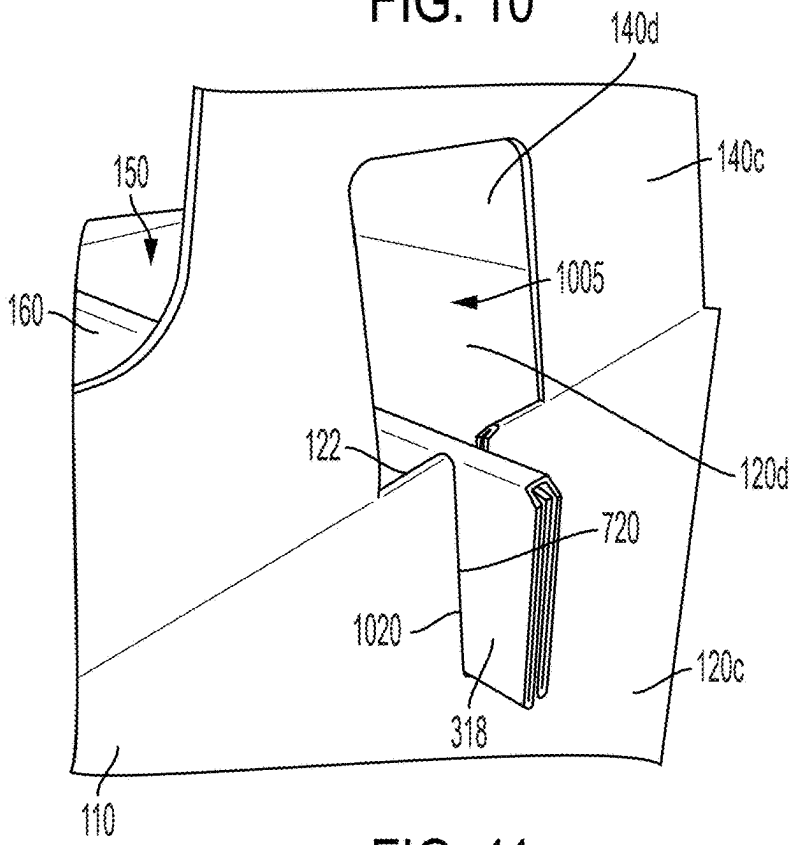
140d
140c
150
1005
160
122
120d
720
1020
120c
318
110

FIG. 11

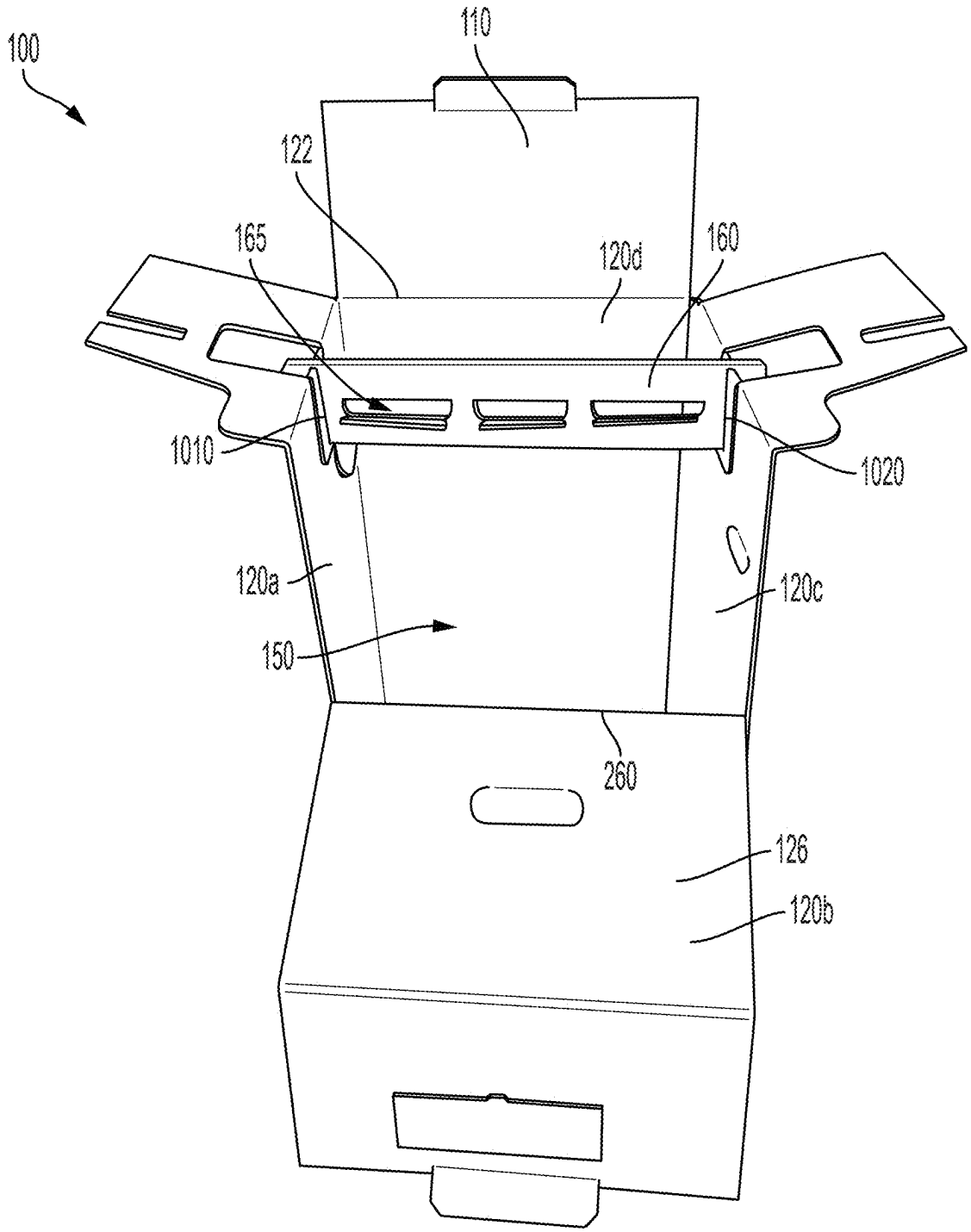

FIG. 12

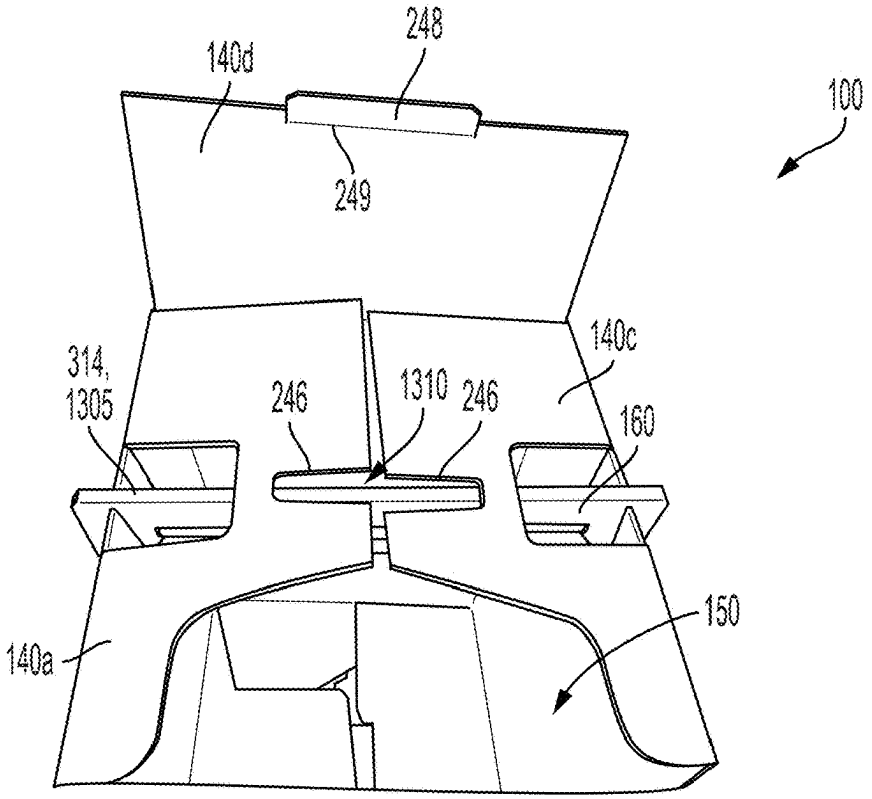
248
140d
100
249
140c
314,
1305
246
1310
246
160
150
140a

FIG. 13

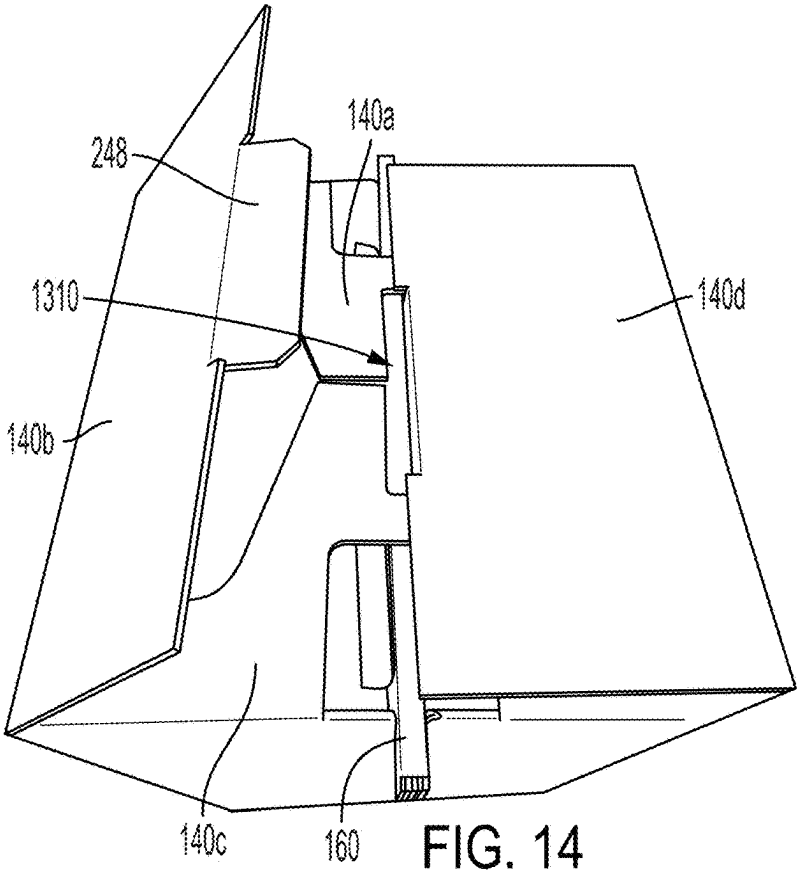
140a
248
1310
140d
140b
140c
160

FIG. 14

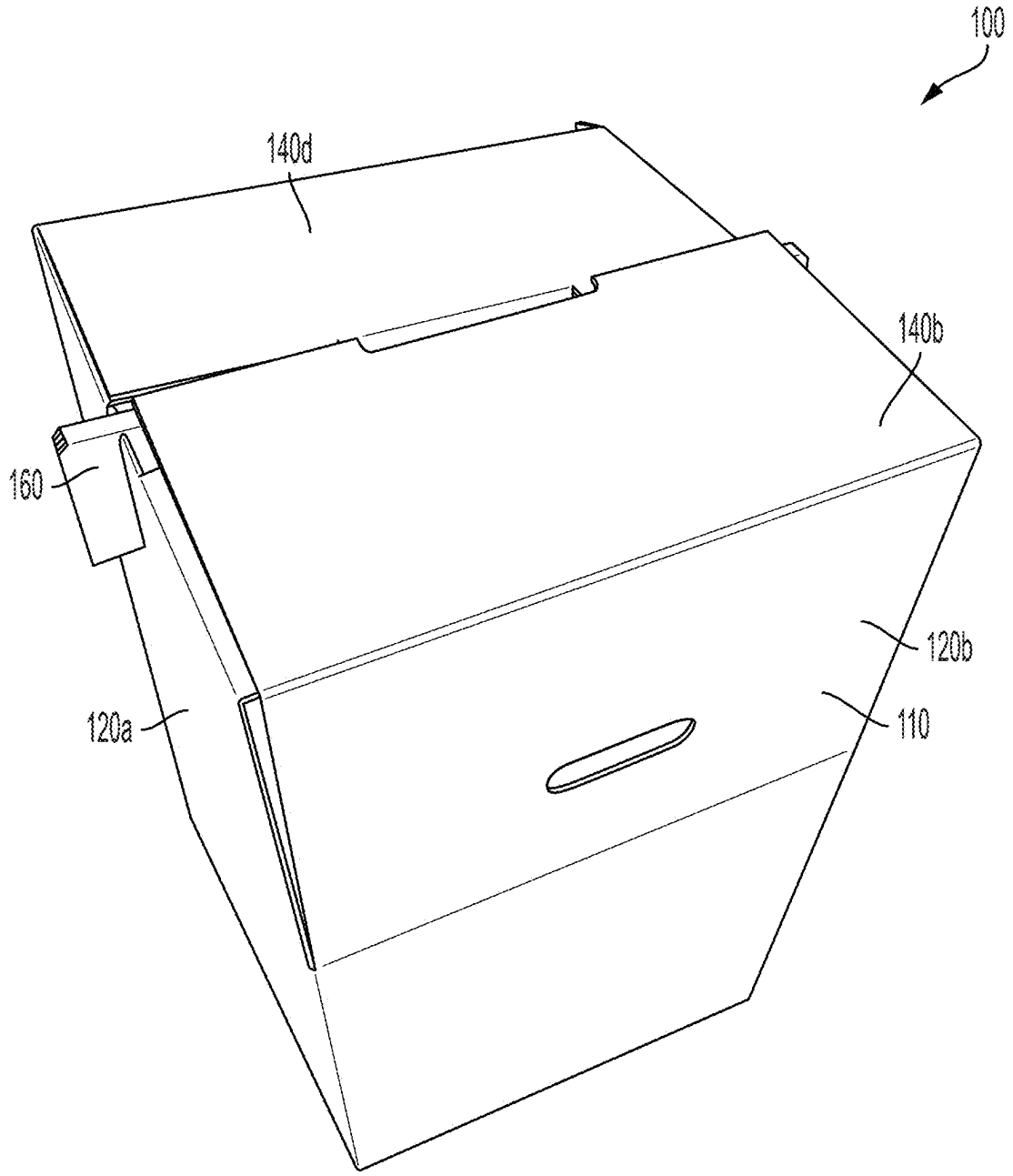

FIG. 15

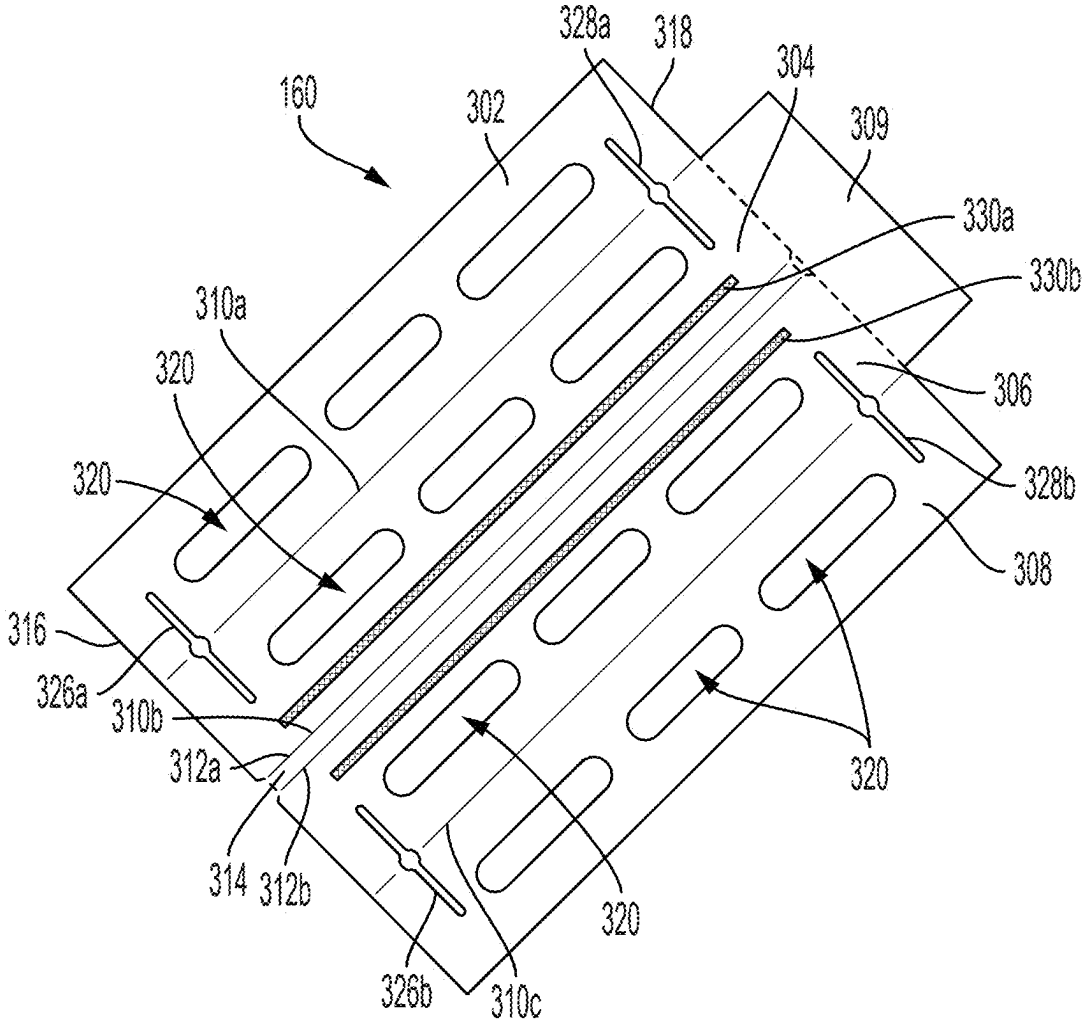
160
302
328a
318
304
309
330a
330b
310a
320
306
320
328b
308
316
326a
310b
312a
320
314
312b
320
326b
310c

FIG. 16

WARDROBE BOX AND HANGER SUPPORT MEMBER THEREFOR

CROSS-REFERENCE TO RELATED APPLICATIONS

[0001] The present application is a continuation of U.S. application Ser. No. 18/540,343, filed Dec. 14, 2023, which is a continuation of U.S. application Ser. No. 17/548,772, filed Dec. 13, 2021, which issued as U.S. Pat. No. 11,878,857 on Jan. 23, 2024, and which claims the benefit of U.S. Application No. 63/127,602, filed Dec. 18, 2020, each of which is hereby specifically incorporated by reference herein in its entirety.

TECHNICAL FIELD

[0002] This disclosure relates to boxes. More specifically, this disclosure relates to a wardrobe box assembly.

BACKGROUND

[0003] Wardrobe boxes typically comprise a hang-bar for hanging clothing within a box. However, hang bars often lack suitable stability when mounted to the box, which can result in the clothing and/or the hang bar falling down within the wardrobe box.

SUMMARY

[0004] It is to be understood that this summary is not an extensive overview of the disclosure. This summary is exemplary and not restrictive, and it is intended neither to identify key or critical elements of the disclosure nor delineate the scope thereof. The sole purpose of this summary is to explain and exemplify certain concepts of the disclosure as an introduction to the following complete and extensive detailed description.

[0005] Disclosed is a wardrobe box assembly including a hanger support member; and a wardrobe box having a sidewall enclosure including a first side panel and a second side panel opposite the first side panel; a first box mounting slot defined at a top edge of the first side panel and configured to engage the hanger support member, the first box mounting slot extending into an outer surface of the first side wall panel from a first mounting slot opening defined at the top edge of the first side wall panel; and a second box mounting slot defined at a top edge of second side panel and configured to engage the hanger support member, the second box mounting slot extending into an outer surface of the second side wall panel from a second mounting slot opening defined at the top edge of the second side wall panel.

[0006] Various implementations described in the present disclosure may include additional systems, methods, features, and advantages, which may not necessarily be expressly disclosed herein but will be apparent to one of ordinary skill in the art upon examination of the following detailed description and accompanying drawings. It is intended that all such systems, methods, features, and advantages be included within the present disclosure and protected by the accompanying claims.

BRIEF DESCRIPTION OF THE DRAWINGS

[0007] The features and components of the following figures are illustrated to emphasize the general principles of the present disclosure. Corresponding features and components throughout the figures may be designated by matching reference characters for the sake of consistency and clarity.

[0008] FIG. **1** is a front perspective view of a wardrobe box assembly in an open configuration, the wardrobe box assembly comprising a wardrobe box and a hanger support member mounted on the wardrobe box in a use configuration, in accordance with one aspect of the present disclosure.

[0009] FIG. **2** is a top elevation view of the wardrobe box in blank form, according to an aspect of the present disclosure.

[0010] FIG. **3** is a top elevation view of the hanger support member in blank form, according to an aspect of the present disclosure.

[0011] FIG. **4** is a front view of the hanger support member of FIG. **1** coupled to the wardrobe box of FIG. **1** in a pre-use configuration.

[0012] FIG. **5** is a front view of the hanger support member of FIG. **1** detached from the wardrobe box of FIG. **1**.

[0013] FIG. **6** illustrates a first step in folding the hanger support member of FIG. **1** to a folded orientation.

[0014] FIG. **7** illustrates the hanger support member of FIG. **1** in the folded orientation.

[0015] FIG. **8** illustrates a first step in configuring the wardrobe box of FIG. **1** in an expanded configuration.

[0016] FIG. **9** illustrates a second step in configuring the wardrobe box of FIG. **1** in an expanded configuration.

[0017] FIG. **10** illustrates folding a mounting flap of the wardrobe box of FIG. **1** to define a box mounting slot.

[0018] FIG. **11** illustrates engaging the hanger support member of FIG. **1** with the box mounting slot of FIG. **10**.

[0019] FIG. **12** illustrates the hanger support member of FIG. **1** assembled with the wardrobe box of FIG. **1** to define the wardrobe box assembly of FIG. **1**, wherein the wardrobe box assembly is in the open configuration and the hanger support member is in the use configuration.

[0020] FIG. **13** illustrates a first step in configuring the wardrobe box assembly in a closed configuration.

[0021] FIG. **14** illustrates a second step in configuring the wardrobe box assembly in the closed configuration.

[0022] FIG. **15** illustrates the wardrobe box assembly in the closed configuration.

[0023] FIG. **16** illustrates a top elevation view of the hanger support member in blank form, according to another example aspect of the present disclosure.

DETAILED DESCRIPTION

[0024] The present disclosure can be understood more readily by reference to the following detailed description, examples, drawings, and claims, and the previous and following description. However, before the present devices, systems, and/or methods are disclosed and described, it is to be understood that this disclosure is not limited to the specific devices, systems, and/or methods disclosed unless otherwise specified, and, as such, can, of course, vary. It is also to be understood that the terminology used herein is for the purpose of describing particular aspects only and is not intended to be limiting.

[0025] The following description is provided as an enabling teaching of the present devices, systems, and/or methods in its best, currently known aspect. To this end, those skilled in the relevant art will recognize and appreciate that many changes can be made to the various aspects of the present devices, systems, and/or methods described herein,

while still obtaining the beneficial results of the present disclosure. It will also be apparent that some of the desired benefits of the present disclosure can be obtained by selecting some of the features of the present disclosure without utilizing other features. Accordingly, those who work in the art will recognize that many modifications and adaptations to the present disclosure are possible and can even be desirable in certain circumstances and are a part of the present disclosure. Thus, the following description is provided as illustrative of the principles of the present disclosure and not in limitation thereof.

[0026] As used throughout, the singular forms "a," "an" and "the" include plural referents unless the context clearly dictates otherwise. Thus, for example, reference to "an element" can include two or more such elements unless the context indicates otherwise.

[0027] Ranges can be expressed herein as from "about" one particular value, and/or to "about" another particular value. When such a range is expressed, another aspect includes from the one particular value and/or to the other particular value. Similarly, when values are expressed as approximations, by use of the antecedent "about," it will be understood that the particular value forms another aspect. It will be further understood that the endpoints of each of the ranges are significant both in relation to the other endpoint, and independently of the other endpoint.

[0028] For purposes of the current disclosure, a material property or dimension measuring about X or substantially X on a particular measurement scale measures within a range between X plus an industry-standard upper tolerance for the specified measurement and X minus an industry-standard lower tolerance for the specified measurement. Because tolerances can vary between different materials, processes and between different models, the tolerance for a particular measurement of a particular component can fall within a range of tolerances.

[0029] As used herein, the terms "optional" or "optionally" mean that the subsequently described event or circumstance can or cannot occur, and that the description includes instances where said event or circumstance occurs and instances where it does not.

[0030] The word "or" as used herein means any one member of a particular list and also includes any combination of members of that list. Further, one should note that conditional language, such as, among others, "can," "could," "might," or "may," unless specifically stated otherwise, or otherwise understood within the context as used, is generally intended to convey that certain aspects include, while other aspects do not include, certain features, elements and/or steps. Thus, such conditional language is not generally intended to imply that features, elements and/or steps are in any way required for one or more particular aspects or that one or more particular aspects necessarily include logic for deciding, with or without user input or prompting, whether these features, elements and/or steps are included or are to be performed in any particular aspect.

[0031] Disclosed are components that can be used to perform the disclosed methods and systems. These and other components are disclosed herein, and it is understood that when combinations, subsets, interactions, groups, etc. of these components are disclosed that while specific reference of each various individual and collective combinations and permutations of these may not be explicitly disclosed, each is specifically contemplated and described herein, for all methods and systems. This applies to all aspects of this application including, but not limited to, steps in disclosed methods. Thus, if there are a variety of additional steps that can be performed it is understood that each of these additional steps can be performed with any specific aspect or combination of aspects of the disclosed methods.

[0032] Disclosed is a wardrobe box assembly and associated methods, systems, devices, and various apparatus. Example aspects of the wardrobe box assembly can comprise a wardrobe box and a hanger support member mounted on the wardrobe box. It would be understood by one of skill in the art that the wardrobe box assembly is described in but a few exemplary embodiments among many. No particular terminology or description should be considered limiting on the disclosure or the scope of any claims issuing therefrom.

[0033] FIG. **1** is a front perspective view of a wardrobe box assembly **100**, in accordance with one aspect of the present disclosure. Example aspects of the wardrobe box assembly **100** can comprise a wardrobe box **110** and a hanger support member **160** mounted on the wardrobe box **110** in a use configuration. The wardrobe box **110** can define an inner box surface **112** and an outer box surface **114**. As shown, the wardrobe box **110** can define a plurality of side panels **120** that together can define a sidewall enclosure **125** in an expanded configuration, as shown. For example, the side panels **120** can comprise a left side panel **120***a*, a front side panel **120***b*, a right side panel **120***c* opposite the left side panel **120**, and a rear side panel **120***d* opposite the front side panel **120***b*. Each of the side panels **120** can define a top edge **122** and a bottom edge **124**. The wardrobe box **110** can further define a plurality of bottom panels **230** (shown in FIG. **2**) and a plurality of top panels **140**. Each of the top panels **140** can extend from a corresponding one of the side panels **120** at the top edge **122** thereof, and each of the bottom panels **230** can extend from a corresponding one of the side panels **120** at the bottom edge **124** thereof.

[0034] According to example aspect, the side panels **120** and bottom panels **230** can generally define an interior cavity **150** of wardrobe box **110**. An upper opening **152** can be defined at the top edge **122** of the side panels **120** to allow access to the interior cavity **150**. In the present aspect, the wardrobe box assembly **100** can be oriented in an open configuration, as shown, wherein the upper opening **152** is uncovered to allow access to the interior cavity **150**, and a closed configuration, as shown in FIG. **15**, wherein the upper opening **152** is covered by the top panels **140**, thus prohibiting access to the interior cavity **150**. In some aspects, an upper panel portion **126** of the front side panel **120***b* can be configured to fold away from the interior cavity **150**, relative to a lower panel portion **128** of the front side panel **120***b*, to provide improved access to the interior cavity **150** at a front side **130** of the wardrobe box **110** in the open configuration, as described in further detail below. In example aspects, the wardrobe box **110** can comprise paperboard (e.g., cardboard). Specifically, the wardrobe box **110** can be formed from corrugated cardboard in some aspects. Other example aspects of the wardrobe box **110** can comprise any other suitable material or combination of materials, including, but not limited to, plastic, paper, fiberboard, containerboard, or the like.

[0035] The hanger support member **160** can be configured to support hanging clothes within the interior cavity **150** of the wardrobe box **110**. According to example aspects, the hanger support member **160** can be mounted to the sidewall

enclosure **125** of the wardrobe box **110**. In the present aspect, the hanger support member **160** can be mounted to the opposing left and right side panels **120***a,c* substantially at or near the top edges **122** thereof. As such, the hanger support member **160** can extend laterally across the interior cavity **150** substantially at or near the upper opening **152**, as shown. Furthermore, the hanger support member **160** can be oriented substantially within the interior cavity **150**, as shown, or can be oriented partially within the interior cavity **150** or above the interior cavity **150**, relative to the orientation shown. In example aspects, the hanger support member **160** can be oriented about centrally between the front side panel **120***b* and the opposing rear side panel **120***d*, which can substantially center the hanging clothes supported on the hanger support member **160** between the front and rear side panels **120***b,d*.

[0036] In some example aspects, the hanger support member **160** can define one or more hanger openings **165** formed therethrough. For example, in the present aspect, three of the hanger openings **165** are spaced laterally across the hanger support member **160**. Other aspects of the hanger support member **160** can comprise more or fewer hanger openings **165**. To utilize the wardrobe box **110**, a hanger supporting a hanging item of clothing can engage one of the hanger openings **165** formed through the hanger support member **160**. The hanger and the corresponding clothing can be suspended within the interior cavity **150** by the hanger support member **160**. Other aspects of the hanger support member **160** may not define the hanger openings **165**. For example, in aspects not comprising the hanger openings **165**, a hanger can engage a top side **1305** of the hanger support member **160** to suspend the hanger therefrom. In example aspects, the hanger support member **160** can comprise paperboard (e.g., cardboard). Specifically, the hanger support member **160** can be formed from corrugated cardboard in some aspects. Other example aspects of the hanger support member **160** can comprise any other suitable material or combination of materials, including, but not limited to, plastic, paper, fiberboard, containerboard, or the like.

[0037] FIG. **2** illustrates the wardrobe box **110** of the wardrobe box assembly **100** (shown in FIG. **1**) in blank form, according to an example aspect of the present disclosure, wherein the outer box surface **114** is visible. The wardrobe box **110** can define any suitable dimensions. As shown, the wardrobe box **110** can comprise the side panels **120**, the bottom panels **230**, and the top panels **140**. In the present aspect, the wardrobe box **110** can comprise four of the side panels **120**, four of the bottom panels **230**, and four of the top panels **140**. In other aspects, however, the wardrobe box **110** can comprise more or fewer side panels **120**, bottom panels **230**, and/or top panels **140**. The side panels **120** of the wardrobe box **110** can comprise the left, front, right, and rear side panels **120***a,b,c,d*. The front side panel **120***b* can be hingedly coupled to the left side panel **120***a* at a first side bend line **220***a*, the right side panel **120***c* can be hingedly coupled to the front side panel **120***b* opposite the left side panel **120***a* at a second side bend line **220***b*, and the rear side panel **120***d* can be hingedly coupled to the right side panel **120***c* opposite the front side panel **120***b* at a third side bend line **220***c*. An attachment flap **222** can be hingedly coupled to the left side panel **120***a* opposite the front side panel **120***b* at an attachment flap bend line **223**. The side panels **120** can be folded at the corresponding first, second, and third side bend lines **220***a,b,c* to define the sidewall enclosure **125**. Additionally, the attachment flap **222** can be folded at the attachment flap bend line **223** and can be secured to an attachment region **224** of the rear side panel **120***d* to retain the side panels **120** in the expanded configuration (shown in FIG. **1**). In other aspects, the attachment flap **222** can extend from the rear side panel **120***d* and the attachment region **224** can be located on the left side panel **120***a*, as illustrated in FIG. **8**. According to example aspects, as shown, one or more of the side panels **120** can define a handle cut **226** formed therethrough, and each handle cut **226** can define a corresponding handle flap **228** hingedly coupled to the side panel by a handle bend line **229**. Each of the handle flaps **228** can be folded at the corresponding handle bend line **229** to uncover a corresponding handle opening defined by the handle cut **226**. A user can insert a hand through each of the handle openings and grip the wardrobe box **110** to facilitate carrying the wardrobe box assembly **100** (shown in FIG. **1**). The various bend lines described herein can be formed by creasing, perforations, or any other suitable technique or varying techniques known in the art for forming bend lines.

[0038] In the present aspect, the bottom panels **230** can comprise left, front, right, and rear bottom panels **230***a,b,c,d*. The left, front, right, and rear bottom panels **230***a,b,c,d* can extend from the bottom edge **124** of the corresponding left, front, right, and rear side panels **120***a,b,c,d*, respectively, and can be hingedly connected thereto by corresponding bottom bend lines **232**. In example aspects, a coupling area **234** can extend from and be hingedly coupled to each of the front and right bottom panels **230***b,c*, respectively, at a coupling bend line **235**, as shown. The coupling area connected to the front bottom panel **230***b* can be arranged at a left side of the front bottom panel **230***b*, relative to the orientation shown, and the coupling area connected to the right bottom panel **230***c* can be arranged at a right side of the right bottom panel **230***c*, relative to the orientation shown. In other aspects, any two of the bottom panels **230** can comprise one of the coupling areas **234** extending therefrom, which can be coupled to an adjacent one of the bottom panels **230** not comprising one of the coupling areas **234**. According to example aspects, the coupling area **234** extending from the front bottom panel **230***b* can be coupled to the adjacent left bottom panel **230***a*, and the coupling area **234** extending from the right bottom panel **230***c* can be coupled to the adjacent rear bottom panel **230***d* when assembling the wardrobe box **110** from the blank form shown to the expanded configuration, as shown in FIG. **1**. In some aspects, an adhesive, such as glue, can be applied to each of the coupling areas **234**, and the coupling areas **234** can be adhered to the corresponding left and rear bottom panels **230***a,d*. In other aspects, the coupling areas **234** can be coupled to the corresponding left and rear bottom panels **230***a,d* by any other suitable fastener or fastening technique known in the art.

[0039] In example aspects, the top panels **140** can comprise left, front, right, and rear top panels **140***a,b,c,d*. The left, front, right, and rear top panels **140***a,b,c,d* can extend from the top edge **122** of the corresponding left, front, right, and rear side panels **120***a,b,c,d* and can be hingedly connected thereto by corresponding top bend lines **242**. Each of the top panels **140** can define a distal edge **244** distal to the corresponding side panel **120**. In the present aspect, each of the left and right top panels **140***a,c* can define a closure slot **246** formed at the corresponding distal edge **244** thereof, and

each of the front and rear top panels **140***b,d* can define a closure tab **248** extending generally from the corresponding distal edge **244** thereof. Each of the closure tabs **248** can be hingedly coupled to the corresponding front or rear top panel **140***b,d* by a closure bend line **249**, as shown. The closure tabs **248** can be configured to removably engage the closure slots **246** to retain the wardrobe box assembly **100** in the closed configuration, as described in further detail below with respect to FIG. **14**.

[0040] According to example aspects, the wardrobe box **110** can further define a pair of longitudinal box slots **250**. A first longitudinal box slot **250***a* of the longitudinal box slots **250** can extend from the left top panel **140***a* to the left side panel **120***a*, across and substantially perpendicular to the corresponding top bend line **242**. A second longitudinal box slot **250***b* of the longitudinal box slots **250** can extend from the right top panel **140***c* to the right side panel **120***c*, across and substantially perpendicular to the corresponding top bend line **242**. As such, each of the longitudinal box slots **250** can define an upper slot portion **252** formed through the corresponding top panel **140** and a lower slot portion **254** formed through the corresponding side panel **120**. In other aspects, the first longitudinal box slot **250***a* can extend from the front top panel **140***b* to the front side panel **120***b* and the second longitudinal box slot **250***b* can extend from the rear top panel **140***d* to the rear side panel **120***d*. In example aspects, as shown, each of the left and right top panels **140***a,c* can define a tab cut **256** extending from the corresponding top bend line **242** and around the upper slot portion **252** of the corresponding longitudinal box slot **250**. Each of the tab cuts **256** can be substantially U-shaped in the present aspect, and can define a corresponding mounting tab **258** hingedly coupled to the corresponding side panel **120** at the corresponding top bend line **242**. Thus, the upper slot portion **252** of each longitudinal box slot **250** can be formed through the corresponding mounting tab **258**, as shown.

[0041] In some aspects, the front side panel **120***b* and/or any other ones of the side panels **120** can define the upper panel portion **126** hingedly connected to the lower panel portion **128** at a folding bend line **260**. The upper panel portion **126** can extend from the corresponding top bend line **242** to the folding bend line **260**, and the lower panel portion **128** can extend from the corresponding bottom bend line **232** to the folding bend line **260**. Furthermore, a first panel slit **262** can be defined between the upper panel portion **126** and the left side panel **120***a*, and a second panel slit **264** can be defined between the upper panel portion **126** and the right side panel **120***c*, such that the upper panel portion **126** can be unattached to each of the left and right side panels **120***a,c*. In the present aspect, the handle flap **228** of the front side panel **120***b* can be connected to the upper panel portion **126**, as shown. In other aspects, the upper panel portion **126** can be connected to either or both of the left side panel **120***a* and the right side panel **120**, and/or the folding bend line **260** may not be defined between the upper panel portion **126** and the lower panel portion **128**.

[0042] FIG. **3** illustrates the hanger support member **160** of the wardrobe box assembly **100** (shown in FIG. **1**) in blank form, according to an example aspect of the present disclosure. The hanger support member **160** can define any suitable dimensions. As shown, the hanger support member **160** can define a first inner panel **304**, a second inner panel **306**, a first outer panel **302**, and a second outer panel **308**. The first outer panel **302** can be hingedly connected to the first inner panel **304** by a first hanger bend line **310***a*, the second inner panel **306** can be hingedly connected to the first inner panel **304** opposite the first outer panel **302** at a second hanger bend line **310***b*, and the second outer panel **308** can be hingedly connected to the second inner panel **306** opposite the first inner panel **304** at a third hanger bend line **310***c*. In the present aspect, the second hanger bend line **310***b* connecting the first inner panel **304** to the second inner panel **306** can define first and second parallel bend lines **312***a,b* and an elongated spine **314** therebetween. However, other aspects of the second hanger bend line **310***b* can simply comprise a singular bend line, like the first and third hanger bend lines **310***a,c*. In some aspects, some or all of the first, second, and third hanger bend lines **310***a,b,c* can comprise perforations configured to facilitate folding along the corresponding hanger bend lines **310***a,b,c*. The hanger support member **160** can be folded at the first, second, and third hanger bend lines **310***a,b,c* when folding the hanger support member **160** from the blank form shown to a folded orientation, as described in further detail with respect to FIGS. **6** and **7**.

[0043] According to example aspects, the hanger support member **160** can define a left end **316** and a right end **318**. Each of the first and second inner panels **304**,**306** and first and second outer panels **302**,**308** can extend from the left end **316** to the right end **318**. In some aspects, an attachment panel **309** can be detachably coupled to the hanger support member **160** and can be secured to the wardrobe box **110**, as described in further detail with respect to FIG. **4**. In the present aspect, the attachment panel **309** can extend from the hanger support member **260** at the right end **318** thereof. Specifically, in the present aspect, the attachment panel **309** can extend alongside the first and second inner panels **304**,**306** substantially from the first hanger bend line **310***a* to the third hanger bend line **310***b*. In other aspects, the attachment panel **309** may extend elsewhere from the hanger support member **160**. Other aspects of the hanger support member **160** may not comprise the attachment panel **309**.

[0044] As shown, a plurality of lateral hanger apertures **320** can be formed through each of the first outer panel **302**, the first inner panel **304**, the second inner panel **306**, and the second outer panel **308**. In example aspects, a lateral hanger flap **322** can selectively cover each of the lateral hanger apertures **320** defined in the first inner panel **304**. The lateral hanger flaps **322** can be hingedly connected to the first inner panel **304** at a hanger flap bend line **324**. Other aspects, such as the aspect shown in FIG. **16**, do not comprise the lateral hanger flaps **322**. Furthermore, a first pair of longitudinal hanger slots **326***a,b* can be formed through the hanger support member **160** adjacent to the left end **316**, and a second pair of longitudinal hanger slots **328***a,b* can be formed through the hanger support member **160** adjacent to the right end **318**. The longitudinal hanger slot **326***a* and the longitudinal hanger slot **328***a* can extend from the first outer panel **302** to the first inner panel **304**, across and substantially perpendicular to the first hanger bend line **310***a*. Thus, each of the longitudinal hanger slots **326***a*,**328***a* can define a first segment **340***a* formed through the first outer panel **302** and a second segment **340***b* formed through the first inner panel **304**. The longitudinal hanger slot **326***b* and the longitudinal hanger slot **328***b* can extend from the second inner panel **306** to the second outer panel **308**, across and substantially perpendicular to the third hanger bend line **310***c*. Thus, each of the longitudinal hanger slots **326***b*,**328***b* can

define the first segment **340***a* formed through the second outer panel **308** and the second segment **340***b* formed through the second inner panel **306**. The longitudinal hanger slot **326***a* can be longitudinally aligned with the longitudinal hanger slot **326***b* and laterally aligned with the longitudinal hanger slot **328***a*. The longitudinal hanger slot **328***b* can be longitudinally aligned with the longitudinal hanger slot **328***a* and laterally aligned with the longitudinal hanger slot **326***b*.

[0045] In example aspects, the first inner panel **304** can define a first adhesive region **330***a* extending substantially along a length of the first inner panel **304**, proximate and parallel to the first parallel bend line **312***a* of the second hanger bend line **310***b*. Similarly, the second inner panel **306** can define a second adhesive region **330***b* extending substantially along a length of the second inner panel **306**, proximate and parallel to the second parallel bend line **312***b* of the second hanger bend line **310***b*. The first outer panel **302** can be folded towards the first inner panel **304** and adhered thereto by the first adhesive region **330***a* to retain the first outer panel **302** in the folded position, as shown in FIG. **4**. The second outer panel **308** can be folded towards the second inner panel **306** and adhered thereto by the second adhesive region **330***a* to retain the second outer panel **308** in the folded position, as shown in FIG. **4**. The first and second adhesive regions **330***a,b* can comprise an adhesive, such as tape or glue, for example. In other aspects, the first outer panel **302** can be secured to the first inner panel **304** and the second outer panel **308** can be secured to the second inner panel **306** by any other suitable fastener or fastening technique known in the art.

[0046] FIG. **4** illustrates the hanger support member **160** removably attached to the wardrobe box **110** in a pre-use configuration, prior to assembling the wardrobe box assembly **100** (shown in FIG. **1**). As shown, the first outer panel **302** can be folded relative to the first inner panel **304** (shown in FIG. **3**) at the first hanger bend line **310***a* such that the first outer panel **302** can lie substantially flat against the first inner panel **304**, and the second outer panel **308** can be folded relative to the second inner panel **306** (shown in FIG. **3**) at the third hanger bend line **310***c* such that the second outer panel **308** can lie substantially flat against the second inner panel **306**. The first and second outer panels **302**,**308** can be secured to the first and second inner panels **304**,**306** by a fastener, such as the first and second adhesive regions **330***a,b* (shown in FIG. **3**). In other aspects, the first and second outer panels **302**,**308** may not be secured to the first and second inner panels **304**,**306**.

[0047] In the present aspect, the attachment panel **309** can be secured to the inner box surface **112** of the wardrobe box **110** to couple the hanger support member **160** to the wardrobe box **110**, as shown. For example, the attachment panel **309** can be secured to the wardrobe box **110** by an adhesive, such as glue, or any other suitable fastening technique known in the art. The first and second inner panels **304**,**306** can lie substantially flat against the inner box surface **112** of the wardrobe box **110**, as shown, and the attachment panel **309** can be removably attached to the wardrobe box **110** at the right end **318** of the hanger support member **160**. In other aspects, the first and second outer panels **302**,**308** can lie substantially flat against the wardrobe box **110** and/or the hanger support member **160** can be removably attached to the wardrobe box **110** at the left end **316** thereof. In other aspects, the hanger support member **160** can be removably attached to the outer box surface **114** (shown in FIG. **1**) of the wardrobe box **110**. In other aspects, the hanger support member **160** may be unfolded and attached to the wardrobe box **110** in the blank form of the hanger support member **160**, as illustrated in FIG. **3**. As shown, the hanger support member **160** can be detachably connected to the attachment panel **309** by a tear line **412**, and can be configured to tear away from the attachment panel **309** at the tear line **412** to detach the hanger support member **160** from the wardrobe box **110**. FIG. **5** illustrates the hanger support member **160** torn away from the attachment panel **309**. As shown, in some aspects, the attachment panel **309** can define a tab **509** formed along the tear line **412** (shown in FIG. **4**) and configured to engage a notch **514** formed in the hanger support member **160** when the hanger support member **160** is coupled thereto. The tab **509** can be disengaged from the notch **514** when the hanger support member **160** is detached from the attachment panel **309**.

[0048] FIG. **6** illustrates the lateral hanger flaps **322** folded at the corresponding hanger flap bend lines **324**. The lateral hanger flaps **322** are shown folding into the page in the present view. The lateral hanger flaps **322** can be folded away from the first inner panel **304** (shown in FIG. **7**) of the hanger support member **160** to uncover the corresponding lateral hanger apertures **320** formed through the first inner panel **304**. In other aspects, the lateral hanger flaps **322** can be folded inward and through the corresponding lateral hanger apertures **320** formed through the first inner panel **304**, second inner panel **306**, and second outer panel **308**. In still other aspects, the hanger support member **160** does not comprise the lateral hanger flaps **322**, as illustrated in FIG. **16**. FIG. **6** also illustrates folding the first inner panel **304** towards the second inner panel **306** (shown in FIG. **3**) at the second hanger bend line **310***b*, such that the first and second outer panels **302**,**308** can be oriented between the first and second inner panels **304**,**306**, and the first outer panel **302** can substantially confront and lie parallel to the second outer panel **308** in the folded orientation (shown in FIG. **7**). Specifically, the first inner panel **304** can be folded at the first parallel bend line **312***a* of the second hanger bend line **310***b*, and the second inner panel **306** be folded at the second parallel bend line **312***b* of the second hanger bend line **310***b*. When folded, the first segment **340***a* (shown in FIG. **3**) of each of the longitudinal hanger slots **326***a,b*, and **328***a,b* can overlay the corresponding second segment **340***b* (shown in FIG. **3**) thereof to define shortened longitudinal hanger slots **326***a,b*, and **328***a,b*, as shown. In some aspects, the first outer panel **302** can be secured to the second outer panel **308** to retain the hanger support member **160** in the folded orientation.

[0049] FIG. **7** illustrates the hanger support member **160** in the folded orientation. As shown, in the folded orientation, each of the lateral hanger apertures **320** of the first outer panel **302** (shown in FIG. **6**) can align with each of the corresponding lateral hanger apertures **320** of the first inner panel **304**, second inner panel **306** (shown in FIG. **3**), and second outer panel **308** (shown in FIG. **3**) to define the hanger openings **165** formed through the hanger support member **160**. Additionally, in the folded orientation, the longitudinal hanger slot **326***a* (shown in FIG. **3**) and the longitudinal hanger slot **326***b* (shown in FIG. **3**) can align to define a first hanger engagement slot **710** proximate to the left end **316**. Similarly, the longitudinal hanger slot **328***a* (shown in FIG. **3**) and the longitudinal hanger slot **328***b* (shown in FIG. **3**) can align to define a second hanger

engagement slot **720** proximate to the right end **318**. Each of the first and second hanger engagement slots **710**,**720** can define an engagement slot opening **712** at a bottom side **714** of the hanger support member **160** in the folded orientation. Each of the first and second hanger engagement slots **710**,**720** can further define a closed engagement slot end **711** opposite the corresponding engagement slot opening **712**.

[0050] FIGS. **8** and **9** illustrate first and second steps of reconfiguring the wardrobe box **110** from the blank form to the expanded configuration. The first and second steps can be performed in any order. Referring to FIG. **8**, the side panels **120** of the wardrobe box **110** can be folded to define the sidewall enclosure **125** (also shown in FIG. **1**), and the attachment flap **222** can be secured to the attachment region **224** to retain the side panels **120** in the folded position. In the present aspect, the attachment flap **222** can extend from the rear side panel **120***d* (shown in FIG. **1**) and the attachment region **224** can be formed on the left side panel **120***a*. The attachment flap **222** can then be folded over the attachment region **224** and secured to the attachment region **224** by any suitable fastener, such as an adhesive. For example, in some aspects, the fastener can be a strip of glue **810**, as shown. In other aspect, the attachment flap **222** can be any other suitable fastener known in the art. FIG. **8** illustrates the attachment flap **222** as it is being folded towards the attachment region **224**. Furthermore, referring to FIG. **9**, as described above, the bottom panels **230** can be folded at the corresponding bottom bend lines **232**. The coupling area **234** of the front bottom panel **230***b* can be coupled to the left bottom panel **230***a*, and the coupling area **234** of the right bottom panel **230***c* can be coupled to the rear bottom panel **230***d* to retain the bottom panels **230** in the folded positions and to define a substantially planar floor of the wardrobe box **110**. In some aspects, the wardrobe box **110** may be stored in a folded configuration, wherein the bottom panels **230** are disposed within the interior cavity **150** (shown in FIG. **1**). In such an aspect, to expand the wardrobe box **110** to the expanded configuration, the bottom panels **230** can be pushed outward from the interior cavity **150**, as shown, until the bottom panels **230** lie substantially perpendicular to the side panels **120**.

[0051] FIG. **10** is a detail view of an upper end **1002** of the right side panel **120***c* and the right top panel **140***c*. As shown, the mounting tab **258** of the right top panel **140***c* can be folded at the corresponding top bend line **242** towards the right side panel **120***c*. The mounting tab **258** can substantially confront the inner box surface **112** of the wardrobe box **110** and can lie substantially flat against the right side panel **120***c*. In some aspects, the mounting tab **258** can be secured to the right side panel **120***c* by a fastener, such as, for example and without limitation, an adhesive, such as glue. As the mounting tab **258** folds away from the right top panel **140***c*, the mounting tab **258** can uncover a mounting opening **1005** formed through the right top panel **140***c* and defined by the corresponding tab cut **256**. Furthermore, the upper slot portion **252** of the corresponding longitudinal box slot **250***b* can laterally align with the lower slot portion **254** of the corresponding longitudinal box slot **250***b* to define a second box mounting slot **1020**. The second longitudinal box slot **250***b* can define a mounting slot opening **1013** formed at the corresponding top bend line **242** and a closed mounting slot end **1015** opposite the mounting slot opening **1013**. According to example aspects, the mounting tab **258** of the left top panel **140***a* (shown in FIG. **2**) can be folded and secured to the left side panel **120***a* (shown in FIG. **1**) in substantially the same manner to define a first box mounting slot **1010** (shown in FIG. **12**). In other aspects, any other suitable fastener or fastening technique known in the art can secure the mounting tabs **258** to the corresponding left and right side panels **120***a,c*. In other aspects, one or both of the mounting tabs **258** can be folded towards, and in some aspects secured to, the outer box surface **114** (shown in FIG. **1**) of the wardrobe box **110**.

[0052] FIG. **11** illustrates mounting the hanger support member **160** on the wardrobe box **110**. A detail view of the right end **318** of the hanger support member **160** and the second box mounting slot **1020** formed at the top edge **122** of the right side panel **120***c* are shown. To mount the hanger support member **160** on the wardrobe box **110**, the hanger support member **160** can extend across the interior cavity **150** of the wardrobe box **110**. The right end **318** of the hanger support member **160** can extend through the mounting opening **1005** formed in the right top panel **140***c*, and the left end **316** (shown in FIG. **3**) of the hanger support member **160** can extend through the mounting opening **1005** formed in the left top panel **140***a* (shown in FIG. **2**). The second hanger engagement slot **720** adjacent to the right end **318** of the hanger support member **160** can engage the second box mounting slot **1020** of the wardrobe box **110**, as shown, and similarly, the first hanger engagement slot **710** (shown in FIG. **7**) adjacent to the left end **316** of the hanger support member **160** can engage the first box mounting slot **1010** (shown in FIG. **12**). The engagement of the first and second hanger engagement slots **710**,**720** with the corresponding first and second box mounting slots **1010**,**1020** can be advanced until the engagement slot end **711** (shown in FIG. **7**) of each first and second hanger engagement slots **710**,**720** abuts the mounting slot end **1015** (shown in FIG. **10**) of the corresponding first and second box mounting slot **1020**, as shown. The hanger support member **160** can thereby rest on the mounting slot ends **1015** of the wardrobe box **110**.

[0053] FIG. **12** illustrates a front view of the assembled wardrobe box assembly **100** comprising the hanger support member **160** mounted on the wardrobe box **110**. The wardrobe box assembly **100** is shown in the open configuration. As shown, the hanger support member **160** can extend across the interior cavity **150** from the left side panel **120***a* to the right side panel **120***c* at or near the top edges **122** of the corresponding left and right side panels **120***a,c*. The hanger support member **160** can be spaced about centrally between and oriented about parallel to the front side panel **120***b* and the lower panel portion **128** (shown in FIG. **1**) of the rear side panel **120***d*. In the present aspect, the upper panel portion **126** of the front side panel **120***b* can be folded away from the interior cavity **150** at the folding bend line **260** to allow for increased access to the interior cavity **150**. In other aspects, the upper panel portion **126** of the front side panel **120***b* may not be folded relative to the lower panel portion **128** and can remain planar with the lower panel portion **128**. To use the wardrobe box **110** for supporting hanging clothes within the interior cavity **150**, a hook end of a hanger can engage one of the hanger openings **165**, and the hanger support member **160** can suspend the hanger on the hanger support member **160** within the interior cavity **150**. In some aspects, the lateral hanger flaps **322** can provide additional contact points for the hook ends of the hangers. Other aspects of the hanger support member **160** may not

comprise the lateral hanger flaps **322**. Clothing can be hung on the hanger to receive and support the clothing within the interior cavity **150**.

[0054] In example aspects, the wardrobe box assembly **100** can be oriented in the closed configuration to selectively prohibit access to the interior cavity **150**. It may be desirable to orient the wardrobe box assembly **100** in the closed configuration for the protection and storage of clothing received therein. FIG. **13** illustrates a first step in configuring the wardrobe box assembly **100** in the closed configuration. As shown, each of the left top panel **140***a* and the right top panel **140***c* can be folded inward towards the interior cavity **150**. In the present aspect, each of the right top panel **140***c* and left top panel **140***a* can substantially confront, and in some aspects can rest on, the top side **1305** of the hanger support member **160**. The top side **1305** of the hanger support member **160** can be defined by the elongated spine **314** in the present aspect. The closure slot **246** of the left top panel **140***a* can be substantially laterally aligned with the closure slot **246** of the right top panel **140***c* to define a closure opening **1310**, as shown. Furthermore, according to example aspects, each of the closure tabs **248** of the front and rear panels **140***b,d* (front panel **140***b* shown in FIG. **1**) can be bent inward towards one another at the corresponding closure bend lines **249**, as shown.

[0055] FIG. **14** illustrates a next step in configuring the wardrobe box assembly **100** in the closed configuration. As shown, the closure tab **248** extending from the rear top panel **140***d* can be inserted through the closure opening **1310**, such that it can be oriented about perpendicular to the rear top panel **140***d* and can extend along the second inner panel **306** (shown in FIG. **6**) of the hanger support member **160**. Thus, the closure tab **248** of the rear top panel **140***d* can effectively hook onto the left and right top panels **140***a,c* to retain the rear top panel **140***d* in the closed configuration. In some aspects, the closure tabs **248** can be retained within the closure opening **1310** by frictionally abutting the hanger support member **160**. The closure tab **248** extending from the front top panel **140***b* can be similarly inserted through the closure opening **1310** and can extend along the first inner panel **304** (shown in FIG. **3**) of the hanger support member **160**. In other aspects, the closure tab **248** extending from the front top panel **140***b* can first engage the closure opening **1310** followed by the closure tab **248** extending from the rear top panel **140***d*, or both of the closure tabs **248** can simultaneously be engaged with the closure opening **1310**. FIG. **15** illustrates the wardrobe box assembly **100** in the closed configuration. The wardrobe box assembly **100** can be opened again by simply pulling the front and rear top panels **140***b,d* upward, relative to the orientation shown, to disengage the corresponding closure tabs **248** (shown in FIG. **2**) from the closure opening **1310** (shown in FIG. **13**).

[0056] FIG. **16** illustrates the hanger support member **160** according to another example aspect of the present disclosure. As shown, the hanger support member **160** can define the first outer panel **302**, the first inner panel **304**, the second inner panel **306**, and the second outer panel **308**. The first outer panel **302** can be hingedly connected to the first inner panel **304** by the first hanger bend line **310***a*, the second inner panel **306** can be hingedly connected to the first inner panel **304** opposite the first outer panel **302** at the second hanger bend line **310***b*, and the second outer panel **308** can be hingedly connected to the second inner panel **306** opposite the first inner panel **304** at the third hanger bend line **310***c*. In the present aspect, the second hanger bend line **310***b* can define the first and second parallel bend lines **312***a,b* and the elongated spine **314** therebetween. In some aspects, some or all of the first, second, and third hanger bend lines **310***a,b,c* can comprise perforations configured to facilitate folding along the corresponding hanger bend lines **310***a,b,c*.

[0057] The first inner panel **304** can define the first adhesive region **330***a* proximate and parallel to the first parallel bend line **312***a*, and the second inner panel **306** can define the second adhesive region **330***b* proximate and parallel to the second parallel bend line **312***b*. The first outer panel **302** can be folded towards the first inner panel **304** and adhered thereto by the first adhesive region **330***a*, and the second outer panel **308** can be folded towards the second inner panel **306** and adhered thereto by the second adhesive region **330***a*, as shown in FIG. **4**.

[0058] The hanger support member **160** can further define the left end **316** and the right end **318**. The attachment panel **309** can be detachably coupled to the hanger support member **160** at the right end **318** thereof. The first pair of longitudinal hanger slots **326***a,b* can be formed through the hanger support member **160** adjacent to the left end **316**, and the second pair of longitudinal hanger slots **328***a,b* can be formed through the hanger support member **160** adjacent to the right end **318**. The longitudinal hanger slots **326***a,b* and **328***a,b* can be oriented substantially perpendicular to the first, second, and third hanger bend lines **310***a,b,c*. Furthermore, the plurality of lateral hanger apertures **320** can be formed through each of the first outer panel **302**, the first inner panel **304**, the second inner panel **306**, and the second outer panel **308**. As shown, the present aspect of the hanger support member **160** does not comprise the lateral hanger flaps **322** (shown in FIG. **3**) covering the lateral hanger apertures **320** defined in the first inner panel **304**.

[0059] One should note that conditional language, such as, among others, "can," "could," "might," or "may," unless specifically stated otherwise, or otherwise understood within the context as used, is generally intended to convey that certain embodiments include, while other embodiments do not include, certain features, elements and/or steps. Thus, such conditional language is not generally intended to imply that features, elements and/or steps are in any way required for one or more particular embodiments or that one or more particular embodiments necessarily include logic for deciding, with or without user input or prompting, whether these features, elements and/or steps are included or are to be performed in any particular embodiment.

[0060] It should be emphasized that the above-described embodiments are merely possible examples of implementations, merely set forth for a clear understanding of the principles of the present disclosure. Any process descriptions or blocks in flow diagrams should be understood as representing modules, segments, or portions of code which include one or more executable instructions for implementing specific logical functions or steps in the process, and alternate implementations are included in which functions may not be included or executed at all, may be executed out of order from that shown or discussed, including substantially concurrently or in reverse order, depending on the functionality involved, as would be understood by those reasonably skilled in the art of the present disclosure. Many variations and modifications may be made to the above-described embodiment(s) without departing substantially

from the spirit and principles of the present disclosure. Further, the scope of the present disclosure is intended to cover any and all combinations and sub-combinations of all elements, features, and aspects discussed above. All such modifications and variations are intended to be included herein within the scope of the present disclosure, and all possible claims to individual aspects or combinations of elements or steps are intended to be supported by the present disclosure.

That which is claimed is:

1. A wardrobe box assembly comprising:

a hanger support member; and

a wardrobe box comprising:

a sidewall enclosure comprising a plurality of side panels, the plurality of side panels comprising a first side panel and a second side panel opposite the first side panel, the sidewall enclosure at least partially defining an interior cavity of the wardrobe box;

a first box mounting slot defined at a top edge of the first side panel and configured to engage the hanger support member, the first box mounting slot extending into an outer surface of the first side wall panel from a first mounting slot opening defined at the top edge of the first side wall panel to a first closed mounting slot end defined opposite the first mounting slot opening; and

a second box mounting slot defined at a top edge of second side panel and configured to engage the hanger support member, the second box mounting slot extending into an outer surface of the second side wall panel from a second mounting slot opening defined at the top edge of the second side wall panel to a second closed mounting slot end defined opposite the second mounting slot opening.

2. The wardrobe box assembly of claim **1**, further comprising a plurality of top panels, the plurality of top panels including a first top panel hingedly connected to the top edge of the first side panel at a first top bend line and a second top panel hingedly connected to the top edge of the second side panel at a second top bend line, the first top panel and the second top panel configured to fold over the interior cavity at a top enclosure end of the sidewall enclosure.

3. The wardrobe box assembly of claim **2**, wherein the first top panel defines a first opening in communication with the first box mounting slot, and wherein the second top panel defines a second opening in communication with the second box mounting slot.

4. The wardrobe box assembly of claim **3**, wherein:

the first top panel defines a first mounting tab hingedly coupled to the first side panel and defining the first opening;

the second top panel defines a second mounting tab hingedly coupled to the second side panel and defining the second opening; and

the first mounting tab is folded to confront the first side panel in a first folded tab configuration and the second mounting tab is folded to confront the second side panel in a second folded tab configuration.

5. The wardrobe box assembly of claim **4**, wherein:

the first opening is a first upper slot portion, the first box mounting slot is a first lower slot portion, and the first upper slot portion and the first lower slot portion together define a first box slot;

the second opening is a second upper slot portion, the second box mounting slot is a second lower slot portion, and the second upper slot portion and the second lower slot portion together define a second box slot;

the first upper slot portion is laterally aligned with the first lower slot portion in the first folded tab configuration; and

the second upper slot portion is laterally aligned with the second lower slot portion in the second folded tab configuration.

6. The wardrobe box assembly of claim **4**, wherein the first mounting tab is folded into the interior cavity of the wardrobe box in the first folded tab configuration, and wherein the second mounting tab is folded into the interior cavity of the wardrobe box in the second folded tab configuration.

7. The wardrobe box assembly of claim **2**, wherein:

the plurality of side panels further comprise a third side panel extending between the first and second side panels and a fourth side panel extending between the first and second side panels; and

the plurality of top panels further comprise a third top panel hingedly connected to a top edge of the third side panel and a fourth top panel hingedly connected to a top edge of the fourth side panel.

8. The wardrobe box assembly of claim **7**, wherein:

a first opposing pair of the top panels of the plurality of top panels each define a closure slot that is opposite from the top edge thereof;

the closure slots together define a closure opening in a closed configuration of the wardrobe box;

a second opposing pair of the top panels of the plurality of top panels each define a closure tab that is opposite from the top edge thereof; and

each of the closure tabs engage the closure opening in the closed configuration.

9. The wardrobe box assembly of claim **7**, further comprising a plurality of bottom panels, wherein one of the plurality of bottom panels is hingedly connected to a bottom edge of each of the first side panel, the second side panel, the third side panel, and the fourth side panel.

10. The wardrobe box assembly of claim **9**, wherein:

a first coupling area extends from a first bottom panel of the plurality of bottom panels and is coupled to a second bottom panel of the plurality of bottom panels, the second bottom panel adjacent to the first bottom panel; and

a second coupling area extends from a third bottom panel of the plurality of bottom panels and is coupled to a fourth bottom panel of the plurality of bottom panels, the fourth bottom panel adjacent to the third bottom panel.

11. The wardrobe box assembly of claim **7**, wherein the third side panel defines a lower panel portion and an upper panel portion hingedly connected to the lower panel portion, the lower panel portion attached to each of the first side panel and the second side panel, the upper panel portion unattached to each of the first side panel and the second side panel.

12. The wardrobe box assembly of claim **1**, wherein an opposing pair of side panels of the plurality of side panels each define a handle cut, each of the handle cuts defining a handle flap hingedly coupled to the corresponding side panel by a handle bend line.

13. The wardrobe box assembly of claim **1**, wherein the hanger support member further comprises:

a first hanger panel;

a second hanger panel hingedly connected to the first hanger panel at a first hanger bend line, the second hanger panel folded at the first hanger bend line to lie substantially flat against the first hanger panel;

a first hanger engagement slot extending into each of the first hanger panel and the second hanger panel at a bottom hanger end of the hanger support member, proximate to a first side of the hanger support member; and

a second hanger engagement slot extending into each of the first hanger panel and the second hanger panel at the bottom hanger end, proximate to a second side of the hanger support member opposite the first side.

14. The wardrobe box assembly of claim **13**, wherein the first hanger panel is adhered to the second hanger panel at a first adhesive regions to retain the second hanger panel in a folded position against the first hanger panel.

15. The wardrobe box assembly of claim **13**, wherein each of the first hanger engagement slot and the second hanger engagement slot are oriented substantially perpendicular to the first hanger bend line.

16. The wardrobe box assembly of claim **15**, wherein:

each of the first hanger engagement slot and the second hanger engagement slot define a first segment formed through the first hanger panel and a second segment formed through the second hanger panel;

the first segment and the second segment of the first hanger engagement slot together define a first longitudinal hanger slot extending across the first hanger bend line; and

the first segment and the second segment of the second hanger engagement slot together define a second longitudinal hanger slot extending across the first hanger bend line.

17. The wardrobe box assembly of claim **13**, wherein:

the first hanger panel is a first inner panel, and the second hanger panel is a first outer panel;

the hanger support member further comprises a second inner panel and a second outer panel hingedly connected to the second inner panel at a second hanger bend line;

the second outer panel is folded at the second hanger bend line to lie substantially flat against the second inner panel; and

the first hanger engagement slot further extends into each of the second inner panel and the second outer panel at the bottom hanger end, proximate to the first side; and

the second hanger engagement slot further extends into each of the second inner panel and the second outer panel at the bottom hanger end, proximate to the second side.

18. The wardrobe box assembly of claim **17**, wherein:

the first inner panel is hingedly connected to the second inner panel at a third hanger bend line; and

the first inner panel is folded relative to the second inner panel at the third hanger bend line to dispose the first and second inner panels between the first and second outer panels.

19. The wardrobe box assembly of claim **18**, wherein the third hanger bend line defines first and second parallel bend lines and an elongated spine between the first and second parallel bend lines.

20. The wardrobe box assembly of claim **13**, wherein the hanger support member defines at least one lateral hanger aperture formed through the first hanger panel and the second hanger panel, the lateral hanger aperture configured to receive a hook end of a hanger therethrough.

* * * * *