US012404125B2

(12) **United States Patent**
Okawa et al.

(10) **Patent No.: US 12,404,125 B2**
(45) **Date of Patent: Sep. 2, 2025**

(54) **MEDIUM CONVEYING DEVICE**

(71) Applicant: **SEIKO EPSON CORPORATION**, Tokyo (JP)

(72) Inventors: **Soshi Okawa**, Shiojiri (JP); **Dai Tamura**, Matsumoto (JP)

(73) Assignee: **Seiko Epson Corporation**, Tokyo (JP)

(*) Notice: Subject to any disclaimer, the term of this patent is extended or adjusted under 35 U.S.C. 154(b) by 65 days.

(21) Appl. No.: **18/413,111**

(22) Filed: **Jan. 16, 2024**

(65) **Prior Publication Data**

US 2024/0239623 A1 Jul. 18, 2024

(30) **Foreign Application Priority Data**

Jan. 18, 2023 (JP) 2023-005562

(51) **Int. Cl.**
B65H 3/06 (2006.01)
B65H 7/18 (2006.01)

(52) **U.S. Cl.**
CPC ***B65H 3/0669*** (2013.01); ***B65H 3/0684*** (2013.01); ***B65H 7/18*** (2013.01); *B65H 2403/72* (2013.01); *B65H 2513/10* (2013.01)

(58) **Field of Classification Search**
CPC B65H 3/06; B65H 3/0669; B65H 3/0684; B65H 3/5215; B65H 3/5261; B65H 7/18; B65H 2403/72; B65H 2403/722; B65H 2513/10
See application file for complete search history.

(56) **References Cited**

U.S. PATENT DOCUMENTS

9,550,642 B1 * 1/2017 Nishioka B65H 5/06
2016/0091853 A1 * 3/2016 Ishikura B65H 3/0684 271/3.18
2017/0247212 A1 * 8/2017 Uohashi B65H 5/066
2018/0273331 A1 * 9/2018 Jariabka B65H 29/20

FOREIGN PATENT DOCUMENTS

JP 2015-013717 A 1/2015

* cited by examiner

Primary Examiner — Prasad V Gokhale
(74) *Attorney, Agent, or Firm* — WORKMAN NYDEGGER

(57) **ABSTRACT**

A medium conveying device includes an accommodation unit that accommodates a plurality of media including a first medium and a second medium, a pickup roller, a retard roller, a separation roller, a conveyance roller, a drive source that generates power to rotate the rollers, a power transmission mechanism that transmits power to the pickup roller and the separation roller, and a transmission interruption mechanism that interrupts transmission of power to the pickup roller during transmission of power to the separation roller. The transmission interruption mechanism is configured to interrupt the transmission of power to the pickup roller after the pickup roller conveys the trailing end of the first medium in a conveying direction.

8 Claims, 15 Drawing Sheets

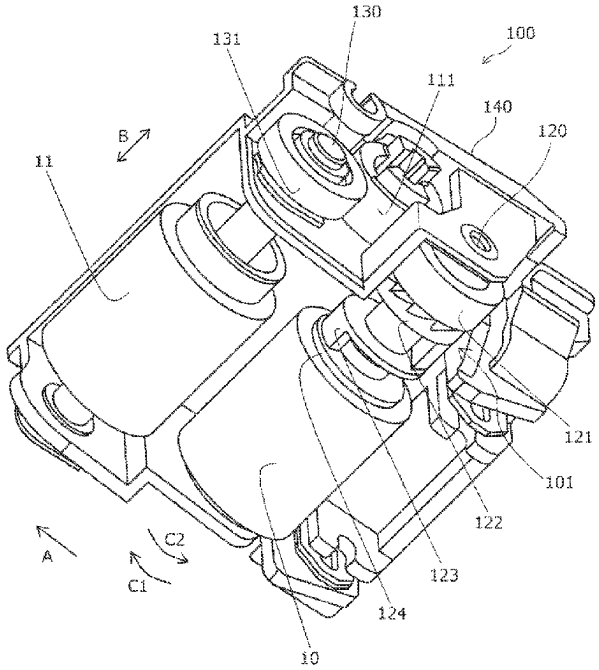

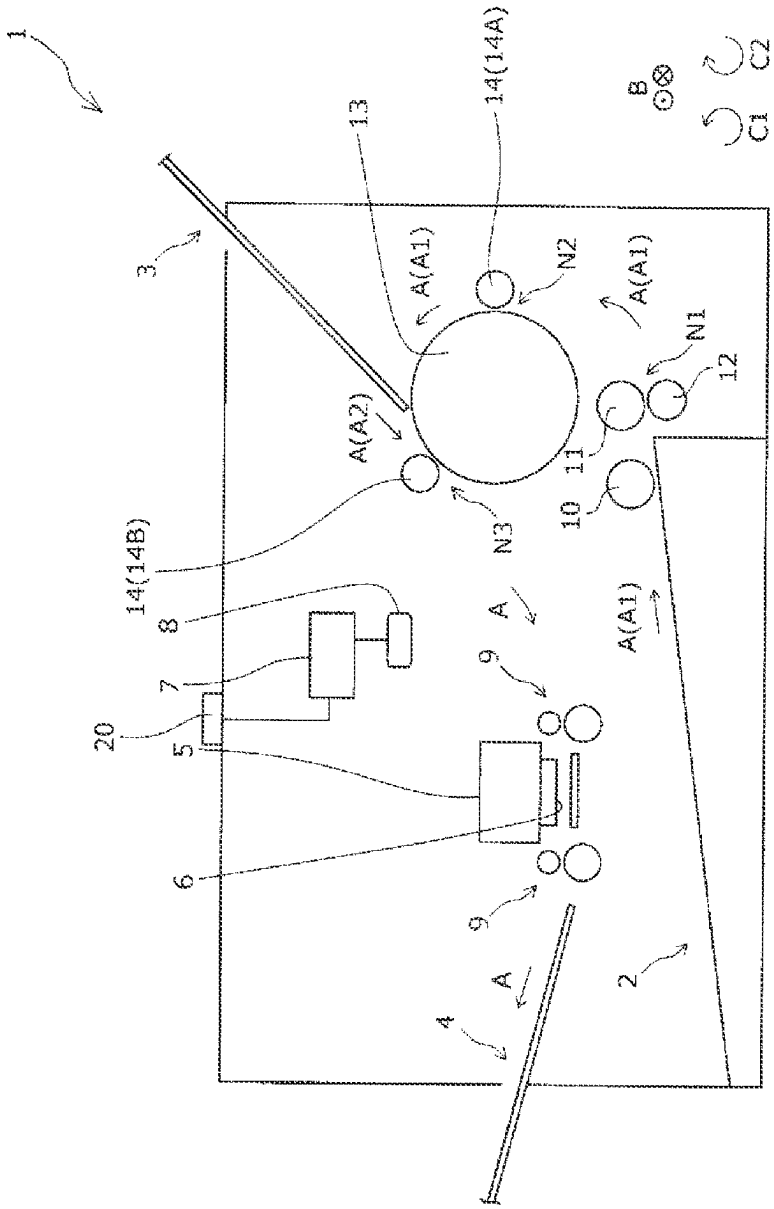
1
3
13
14(14A)
B
C1
C2
A(A1)
N2
A(A1)
N1
12
11
10
A(A2)
N3
14(14B)
8
7
20
5
6
A
9
A(A1)
9
A
4
2

FIG. 1

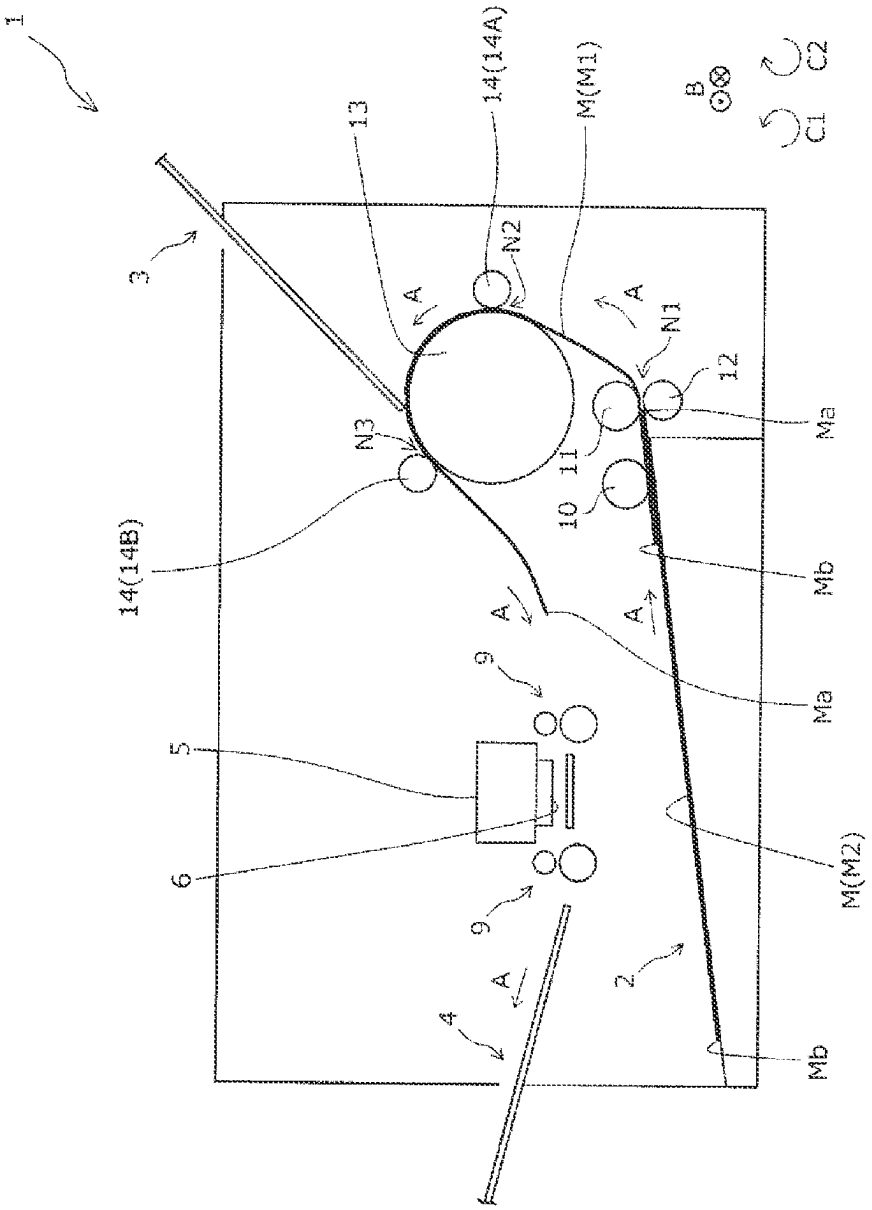
1
3
13
14(14A)
M(M1)
B
C1
C2
N2
A
A
N1
12
Ma
N3
11
10
14(14B)
Mb
A
A
9
Ma
5
6
M(M2)
9
2
A
4
Mb

FIG. 2

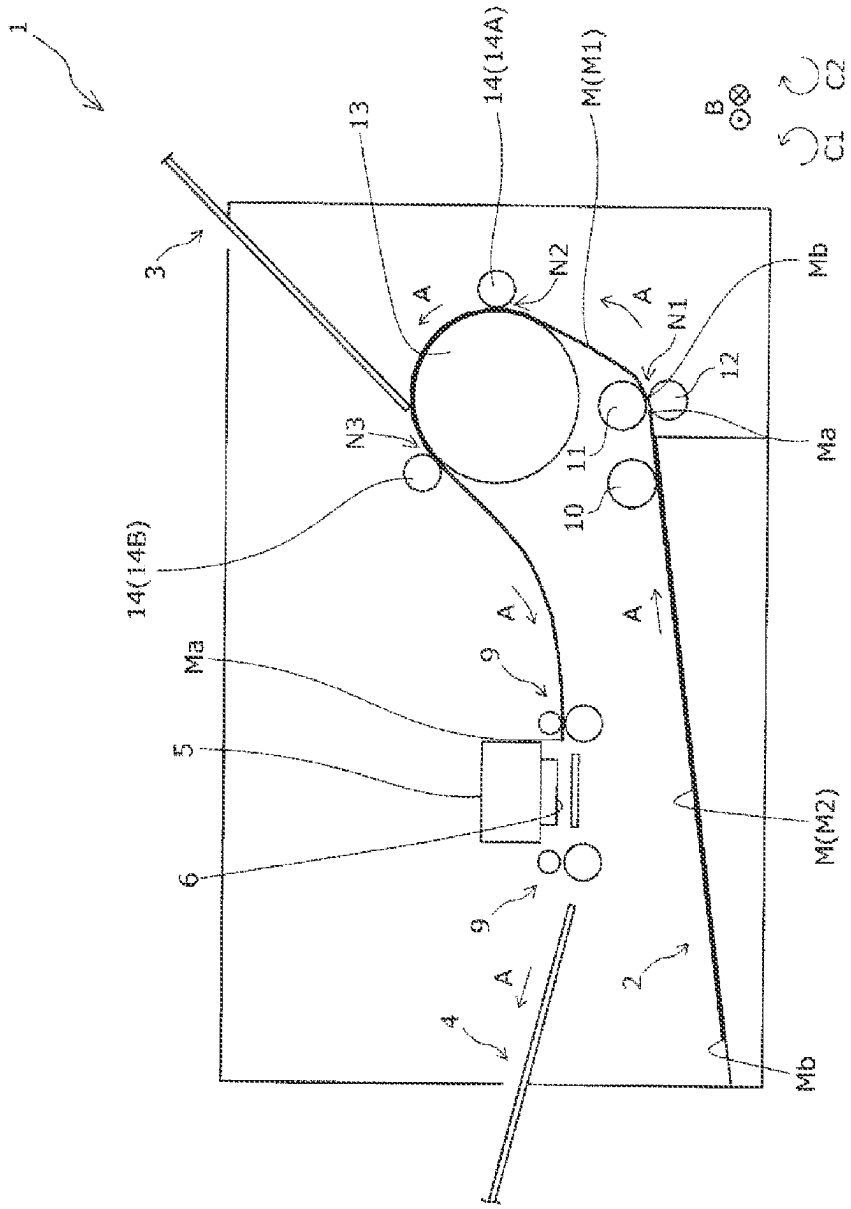

FIG. 3

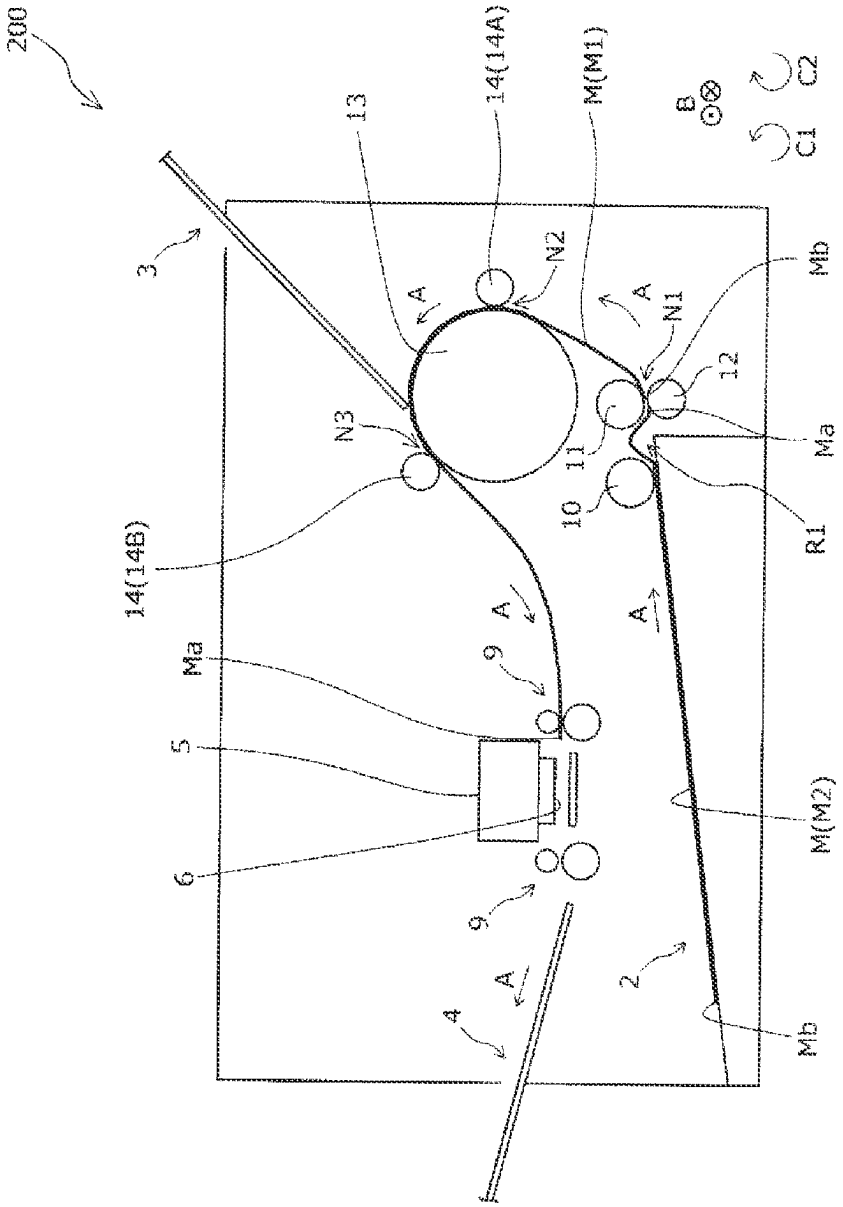
200
3
13
14(14A)
M(M1)
B
C1
C2
N2
A
N1
Mb
12
N3
11
Ma
10
R1
14(14B)
9
5
6
M(M2)
2
4

FIG. 4

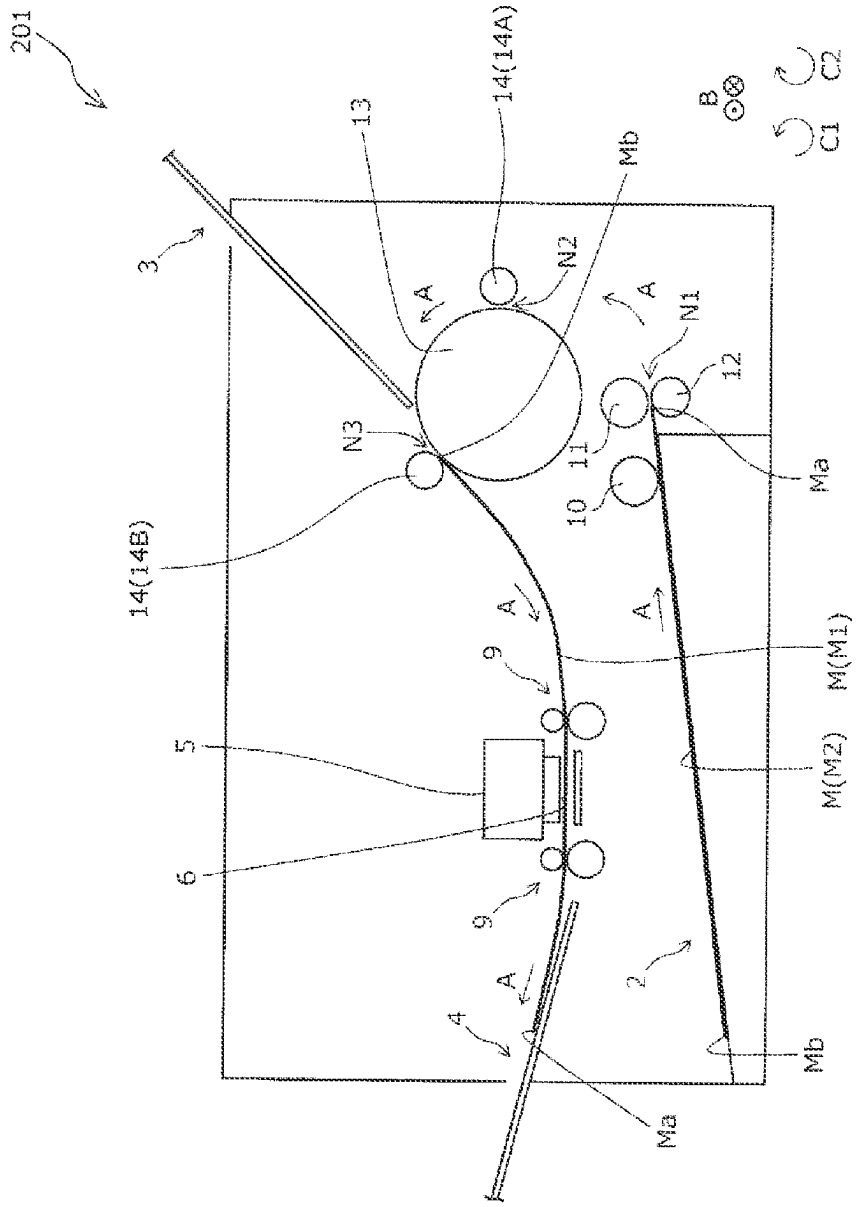
201
3
13
14(14A)
Mb
N2
A
A
N1
12
11
10
Ma
N3
14(14B)
A
A
9
M(M1)
5
M(M2)
6
9
A
2
4
Mb
Ma
B
C1
C2

FIG. 5

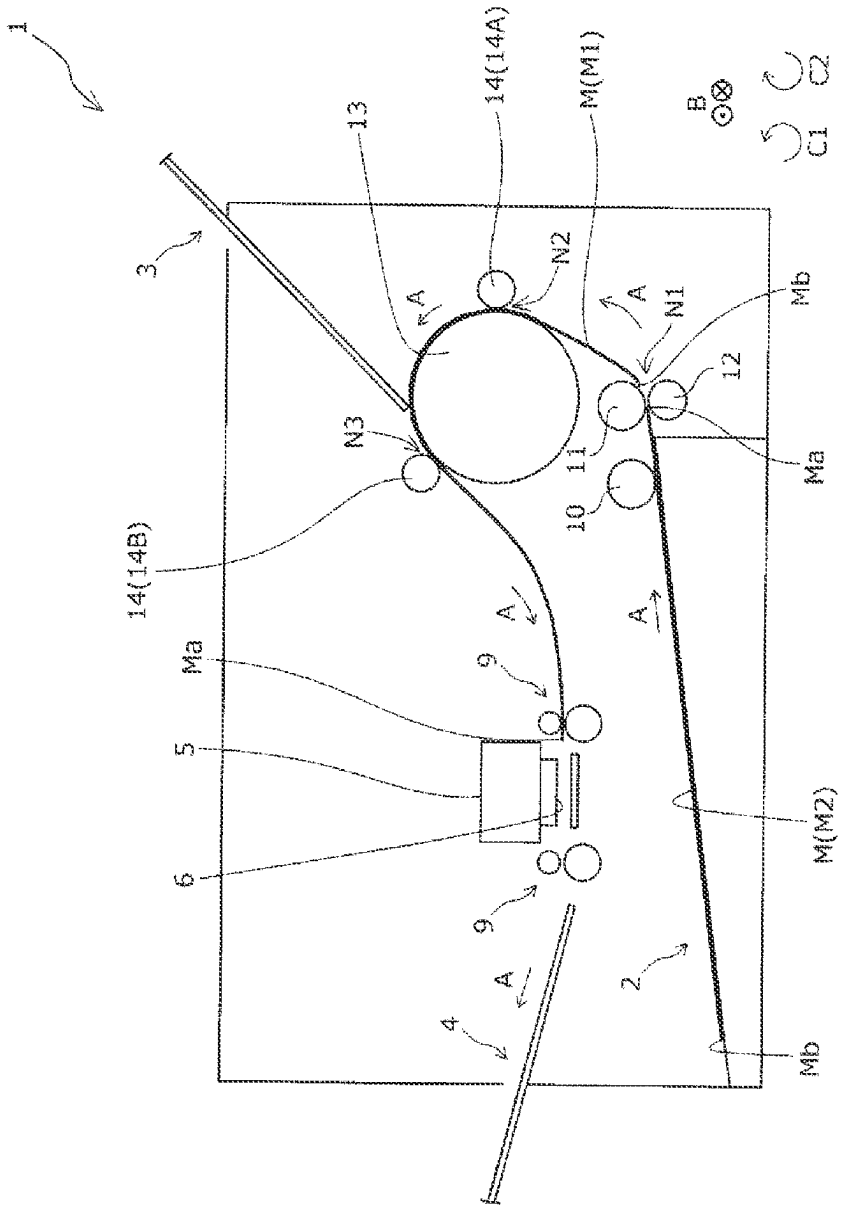

FIG. 6

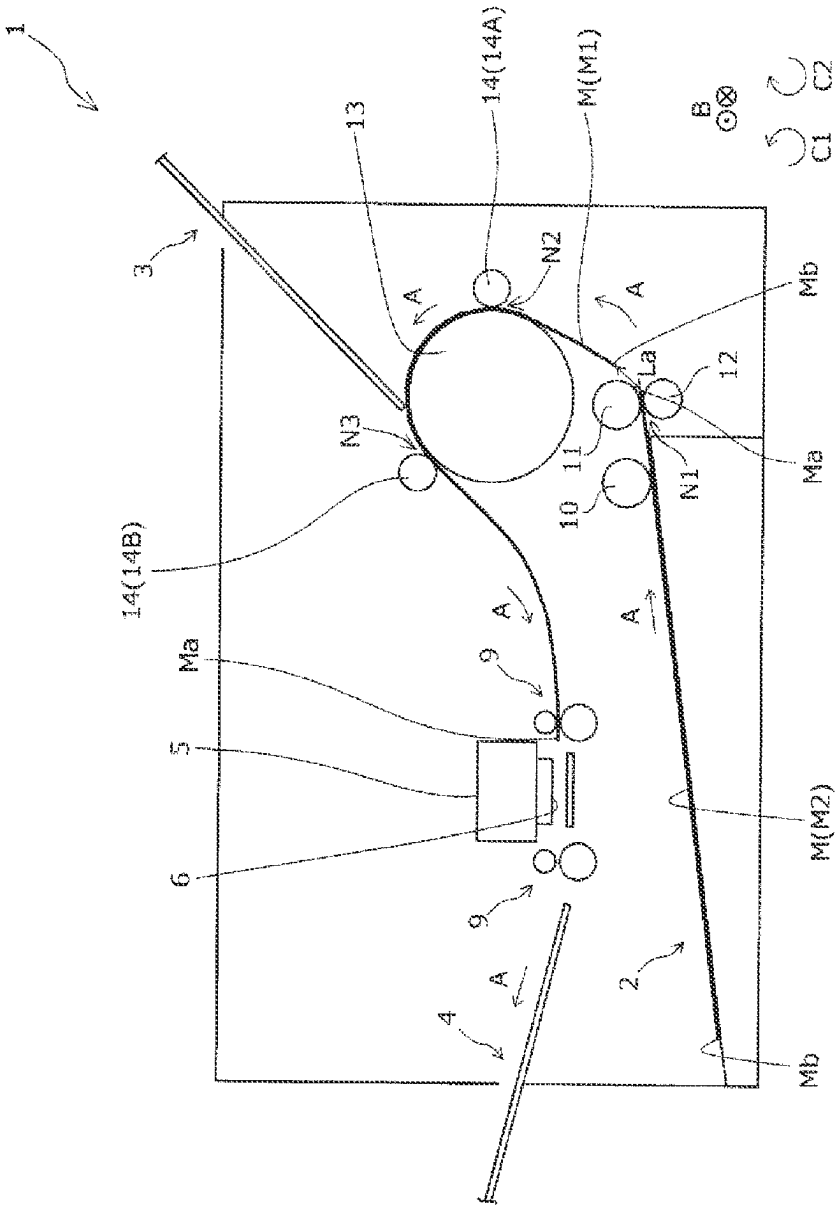

FIG. 7

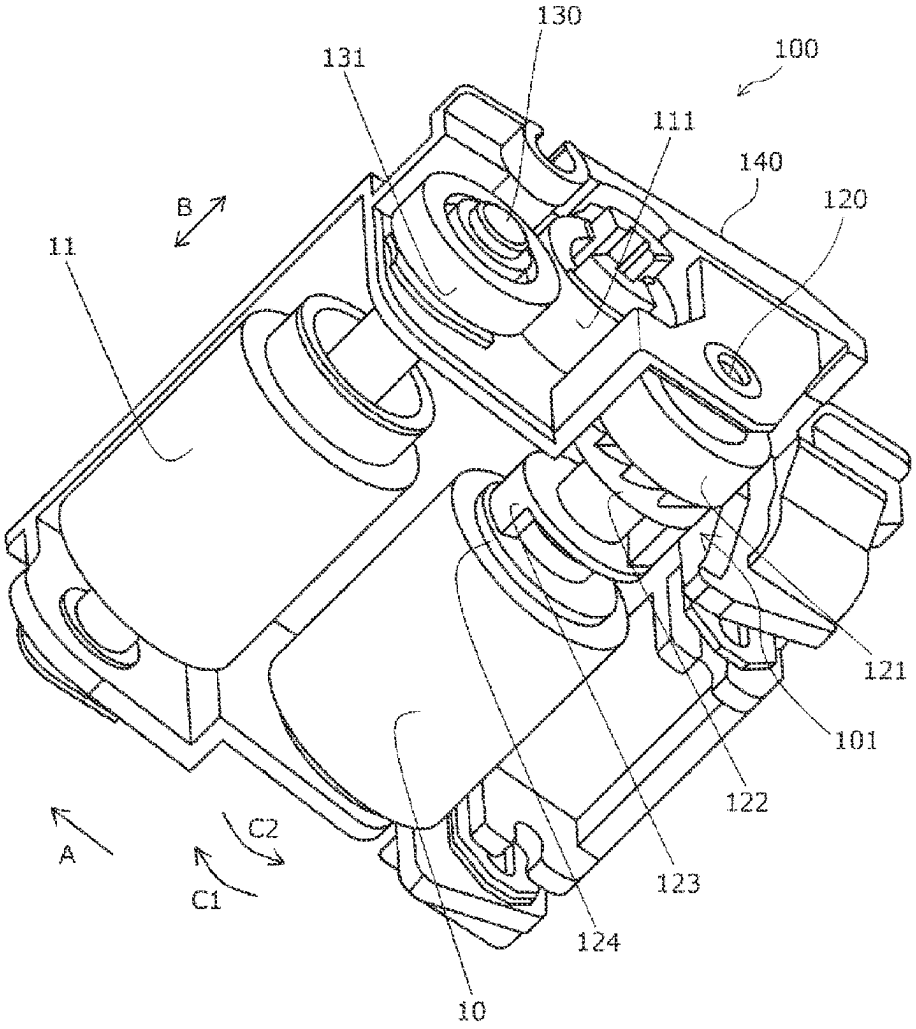

FIG. 8

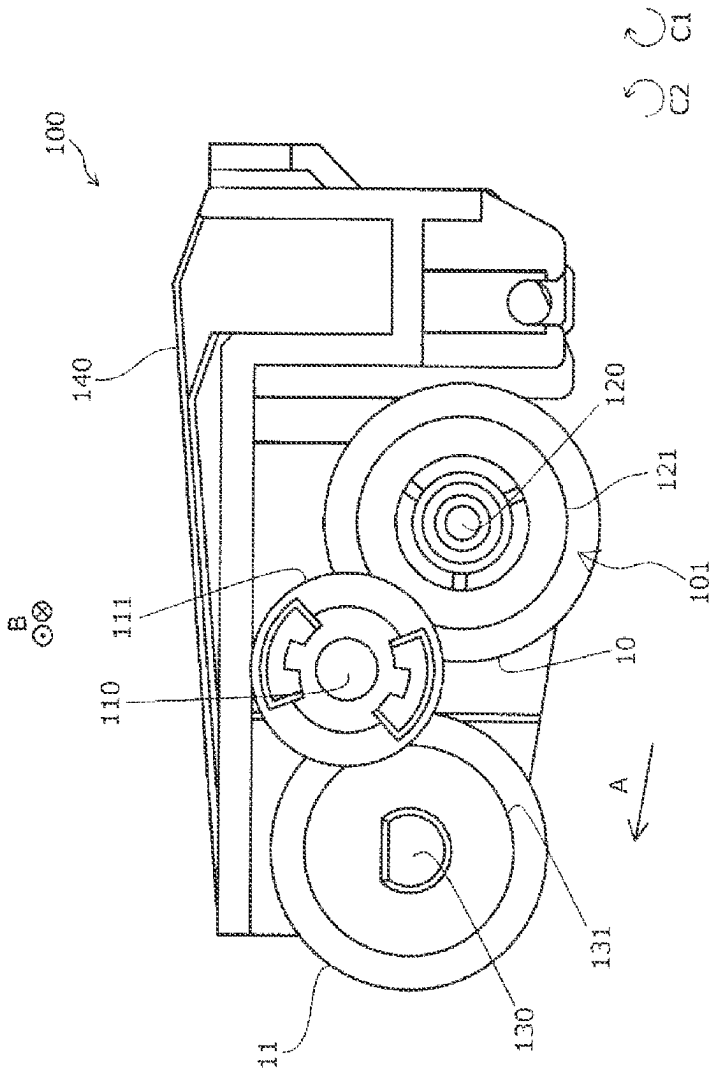

FIG. 9

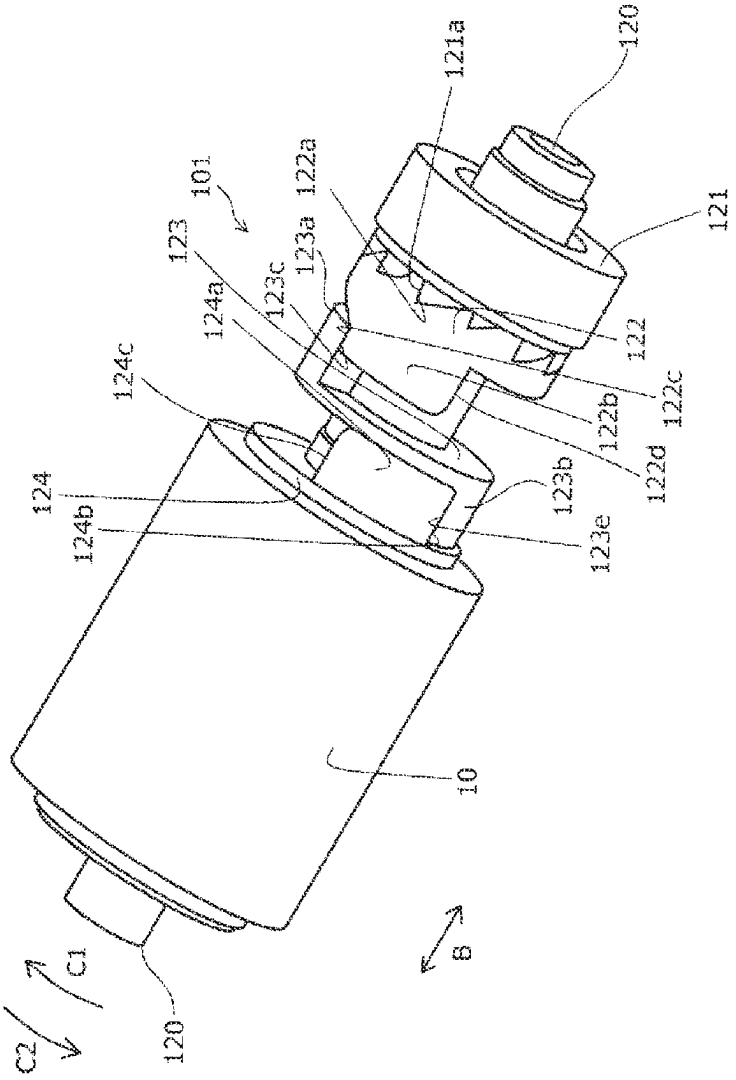
C2
C1
120
124b
124
124c
124a
123
101
123c
123a
122a
121a
120
121
122
122c
122b
122d
123b
123e
10
8

FIG. 10

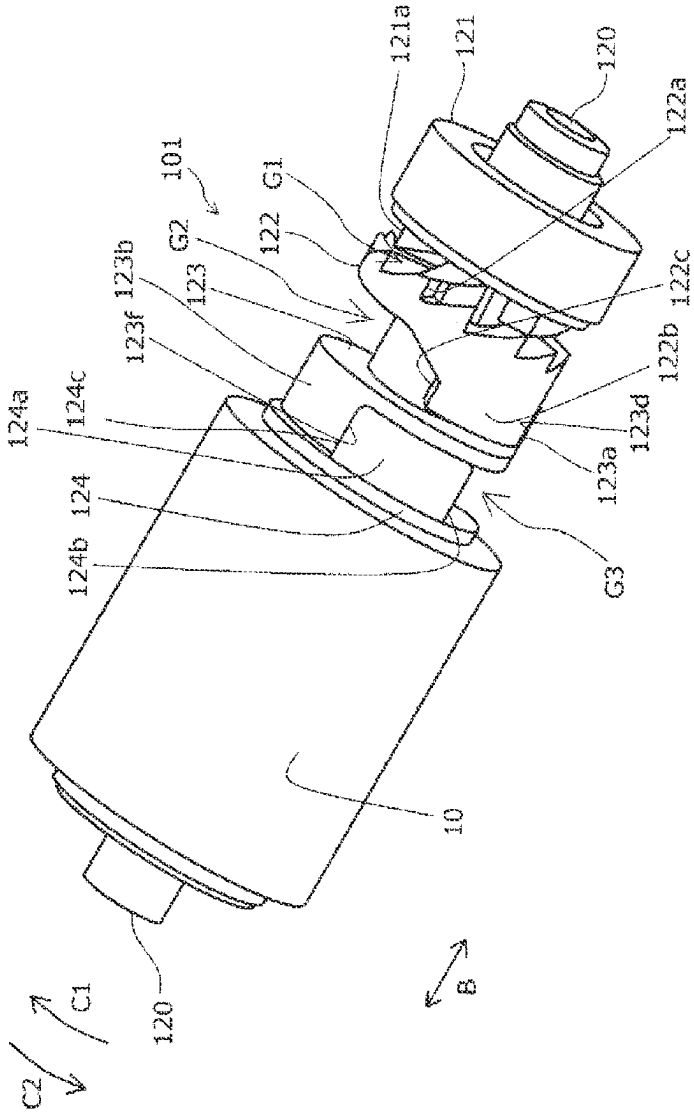
101
121a
121
120
122a
G1
G2
122
123b
123
122c
123f
122b
124a
124c
123d
123a
124
124b
G3
10
120
C1
C2
B

FIG. 11

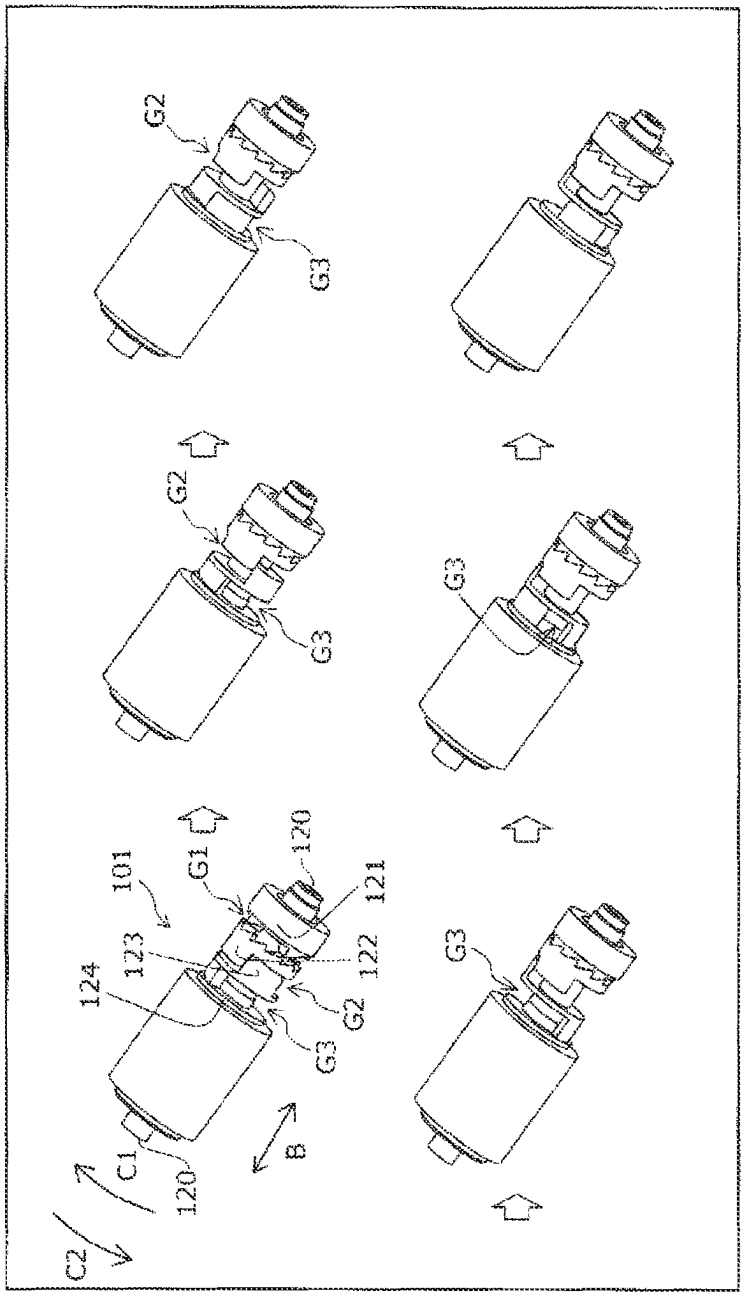

FIG. 12

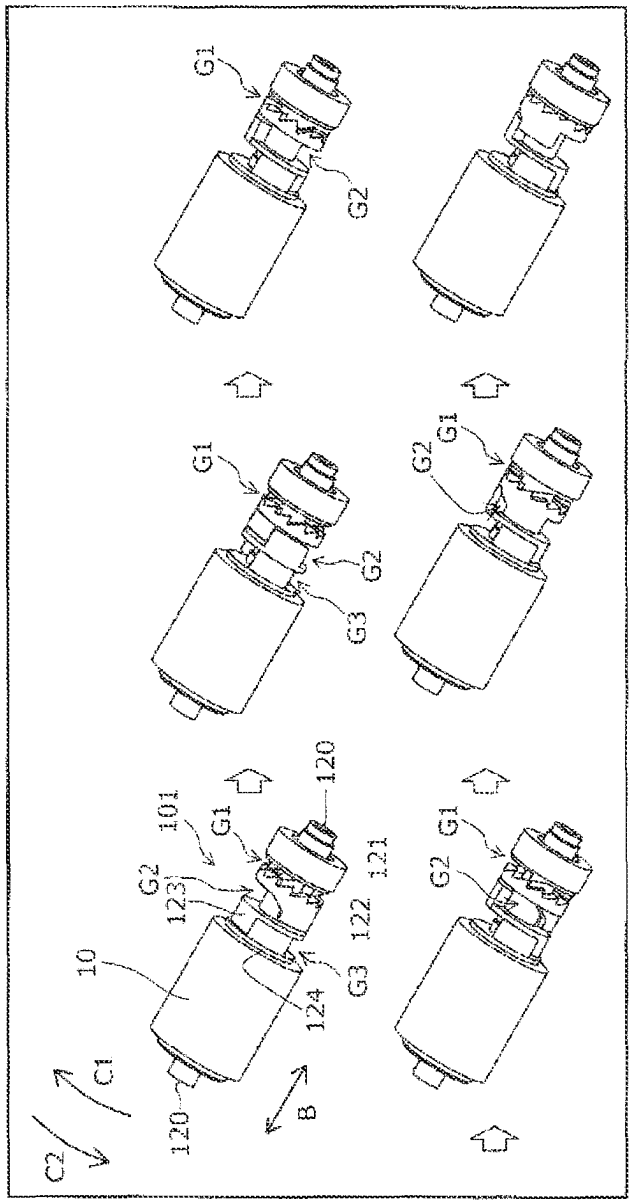
C2
C1
10
120
B
101
G1
G2
123
124
G3
122
121
120
G1
G2
G3
G1
G2
G1
G2
G1
G2

FIG. 13

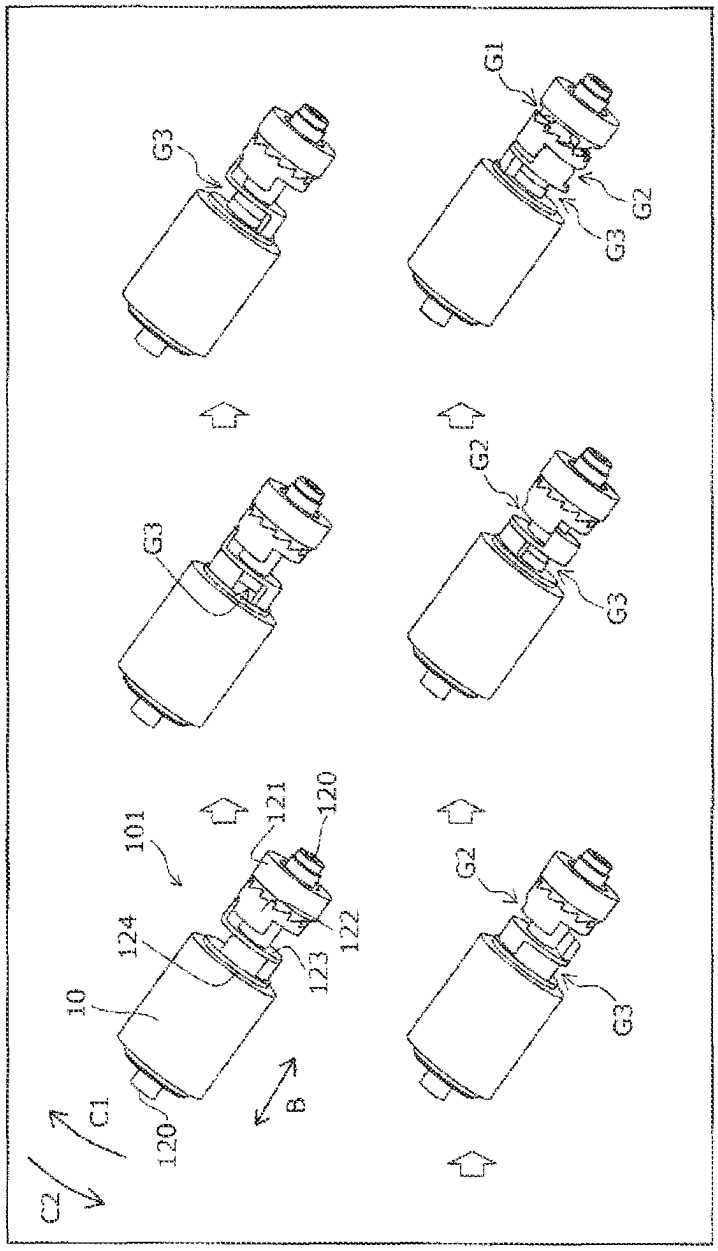

FIG. 14

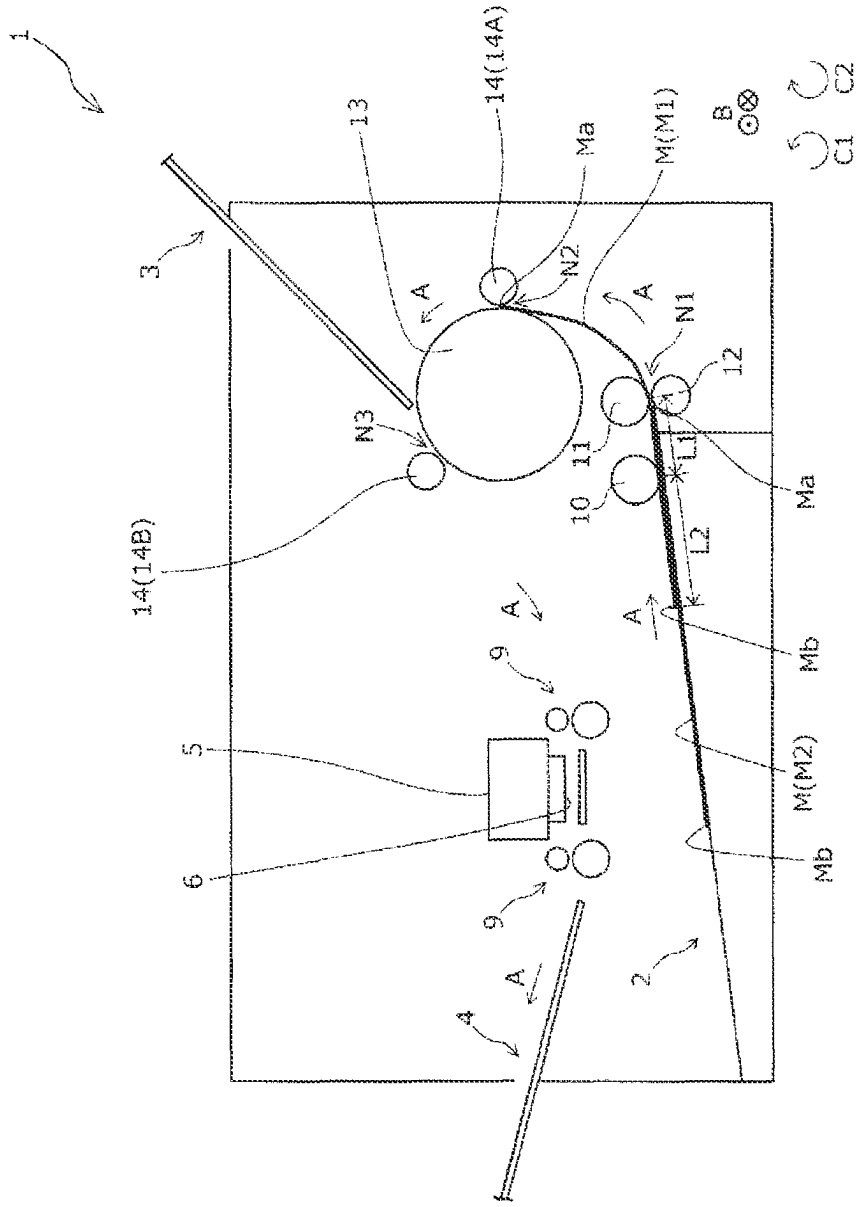
1
3
13
14(14A)
Ma
M(M1)
B
C1
C2
A
N2
N1
12
N3
11
10
L1
L2
Ma
14(14B)
A
A
Mb
9
5
M(M2)
6
Mb
9
A
2
4

FIG. 15

MEDIUM CONVEYING DEVICE

The present application is based on, and claims priority from JP Application Serial Number 2023-005562, filed Jan. 18, 2023, the disclosure of which is hereby incorporated by reference herein in its entirety.

BACKGROUND

1. Technical Field

The present disclosure relates to a medium conveying device.

2. Related Art

Medium conveying devices having various configurations such as a recording device typified by a printer have been used. Among them, there is a medium conveying device configured to continuously convey a plurality of media. For example, JP-A-2015-13717 discloses an image forming apparatus that includes a pickup roller, a separation roller, a retard roller paired with the separation roller, and an intermediate roller and is configured to continuously convey a plurality of sheets.

However, in a medium conveying device configured to continuously convey a plurality of media, when a second medium is conveyed following a first medium among the plurality of media, the media may not be appropriately conveyed. For example, in a medium conveying device including a pickup roller, a separation roller, a retard roller, and a conveyance roller, such as the pickup roller, the separation roller, the retard roller, and the intermediate roller of the image forming apparatus disclosed in JP-A-2015-13717, the following may occur. When the second medium is conveyed following the first medium, the second medium is conveyed by the pickup roller before the trailing end of the first medium in the conveying direction passes through the nip point between the separation roller and the retard roller, and the second medium is conveyed by the pickup roller from the upstream side in the conveying direction in a state in which the leading end of the second medium abuts on the retard roller.

SUMMARY

In order to solve the above problem, a medium conveying device according to the present disclosure includes an accommodation unit that accommodates a plurality of media including a first medium and a second medium conveyed subsequently to the first medium, a pickup roller that conveys, downstream in a conveying direction, a medium accommodated in the accommodation unit, a retard roller that is provided downstream of the pickup roller in the conveying direction and separates the medium conveyed by the pickup roller, a separation roller that abuts on the retard roller and conveys a medium to downstream in the conveying direction, a conveyance roller that is provided downstream of the separation roller in the conveying direction and conveys a medium downstream in the conveying direction, a drive source that generates power for rotating the pickup roller, the separation roller, and the conveyance roller, a power transmission mechanism that transmits the power to the pickup roller and the separation roller, and a transmission interruption mechanism that is provided in the power transmission mechanism and interrupts transmission of the power to the pickup roller during transmission of the power to the separation roller. The transmission interruption mechanism is configured to interrupt the transmission of the power to the pickup roller after the pickup roller conveys a trailing end of the first medium in the conveying direction.

BRIEF DESCRIPTION OF THE DRAWINGS

FIG. **1** is a schematic view illustrating the internal configuration of a printer according to an embodiment of the present disclosure;

FIG. **2** is a schematic diagram illustrating a state in which a pickup roller, a separation roller, and an intermediate roller are driven to convey a first medium in the printer in FIG. **1**;

FIG. **3** is a schematic view illustrating a state after the state illustrated in FIG. **2**, in which the separation roller and the intermediate roller are driven to convey the first medium, and the transmission of power to the pickup roller is stopped;

FIG. **4** is a diagram illustrating the printer according to Reference Example 1 including a power transmission mechanism that does not include a transmission interruption mechanism and is a schematic diagram illustrating a state in which the first medium is conveyed by driving the pickup roller, the separation roller, and the intermediate roller in a state in which the first medium is at the same position as the position illustrated in FIG. **3**;

FIG. **5** is a diagram showing a printer according to Reference Example 2 including a power transmission mechanism different from the printer in FIG. **1** and is a schematic diagram showing, after a state similar to the state shown in FIG. **2**, a state in which the intermediate roller is driven to convey the first medium, and the transmission of power to the separation roller and the pickup roller is interrupted;

FIG. **6** is a schematic view showing a state in which the intermediate roller is driven to convey the first medium, and the pickup roller is driven to convey the second medium, following the state shown in FIG. **3**;

FIG. **7** is a schematic view showing a state immediately after the intermediate roller is driven to convey the first medium, and the pickup roller and the separation roller are driven to start conveying the second medium, following the state shown in FIG. **6**;

FIG. **8** is a perspective view showing the power transmission mechanism of the printer in FIG. **1**;

FIG. **9** is a side view showing the power transmission mechanism of the printer in FIG. **1**;

FIG. **10** is a perspective view showing the transmission interruption mechanism of the power transmission mechanism in FIGS. **8** and **9**, showing a state where the interruption distance is the shortest;

FIG. **11** is a perspective view showing the transmission interruption mechanism of the power transmission mechanism in FIGS. **8** and **9**, showing a state where the interruption distance is the longest;

FIG. **12** is a perspective view showing the transmission interruption mechanism in FIGS. **10** and **11**, showing an example of displacement from a state where the interruption distance is the longest to a state where the interruption distance is the shortest;

FIG. **13** is a perspective view showing the transmission interruption mechanism in FIGS. **10** and **11**, showing an example (different from the state in FIG. **12**) of displacement from a state where the interruption distance is the longest to a state where the interruption distance is the shortest;

FIG. **14** is a perspective view showing the transmission interruption mechanism in FIGS. **10** and **11**, showing an

example of displacement from a state where the interruption distance is the shortest to a state where the interruption distance is the longest; and

FIG. **15** is a schematic diagram showing a state in which a usable medium having a minimum length in the conveying direction is conveyed in the printer in FIG. **1**, and the leading end of the medium in the conveying direction is at a nip point (a position at which conveyance can be performed) on the upstream side of an intermediate roller.

DESCRIPTION OF EMBODIMENTS

Hereinafter, the present disclosure will be schematically described.

A medium conveying device according to a first aspect of the present disclosure includes an accommodation unit that accommodates a plurality of media including a first medium and a second medium conveyed subsequently to the first medium, a pickup roller that conveys, downstream in a conveying direction, a medium accommodated in the accommodation unit, a retard roller that is provided downstream of the pickup roller in the conveying direction and separates the medium conveyed by the pickup roller, a separation roller that abuts on the retard roller and conveys a medium downstream in the conveying direction, a conveyance roller that is provided downstream of the separation roller in the conveying direction and conveys a medium downstream in the conveying direction, a drive source that generates power for rotating the pickup roller, the separation roller, and the conveyance roller, a power transmission mechanism that transmits the power to the pickup roller and the separation roller, and a transmission interruption mechanism that is provided in the power transmission mechanism and interrupts transmission of the power to the pickup roller during transmission of the power to the separation roller. The transmission interruption mechanism is configured to interrupt the transmission of the power to the pickup roller after the pickup roller conveys a trailing end of the first medium in the conveying direction.

According to the present aspect, the medium conveying device includes the transmission interruption mechanism that interrupts the transmission of power to the pickup roller during the transmission of the power to the separation roller, and the transmission interruption mechanism is configured to interrupt the transmission of the power to the pickup roller after the pickup roller conveys the trailing end of the first medium in the conveying direction. Accordingly, also in the medium conveying device including the pickup roller, the separation roller, the retard roller, and the conveyance roller, when the second medium is conveyed following the first medium, the second medium can be prevented from being conveyed by the pickup roller before the trailing end of the first medium in the conveying direction passes through the nip point between the separation roller and the retard roller, and the second medium can be effectively prevented from causing jamming near the nip point between the separation roller and the retard roller. Therefore, it is possible to improve conveyance performance when the second medium is conveyed following the first medium.

The medium conveying device according to a second aspect of the present disclosure is an aspect dependent on the first aspect, and the transmission interruption mechanism is configured to interrupt the transmission of the power to the pickup roller until the separation roller conveys the trailing end of the first medium.

According to the present aspect, the transmission interruption mechanism is configured to interrupt the transmission of power to the pickup roller until the separation roller conveys the trailing end of the first medium. Since the succeeding second medium can be conveyed by the pickup roller after the preceding first medium reliably passes through the nip point between the separation roller and the retard roller, it is possible to particularly effectively prevent the second medium from causing jamming near the nip point between the separation roller and the retard roller.

In a medium conveying device according to a third aspect of the present disclosure is an aspect dependent on the first or second aspect, the pickup roller includes an abutment portion, and the transmission interruption mechanism includes a rotating member that is provided at a rotating shaft of the pickup roller, is configured to rotate in a first rotating direction that is a rotating direction when a medium is conveyed with respect to the rotating shaft, and includes an abutted portion configured to abut on and separate from the abutment portion and is configured to interrupt transmission of the power to the pickup roller while the rotating member rotates in the first rotating direction so as to be displaced from a state in which the abutted portion is separated from the abutment portion to a state in which the abutted portion abuts on the abutment portion.

According to the present aspect, the transmission interruption mechanism interrupts the transmission of the power to the pickup roller while the rotating member rotates in the first rotation direction so as to be displaced from a state in which the abutted portion is separated from the abutment portion to a state in which the abutted portion abuts on the abutment portion. With such a configuration, the transmission interruption mechanism can be easily formed compact.

In a medium conveying device according to a fourth aspect of the present disclosure is an aspect dependent on the third aspect, a first conveyance speed at which the medium is conveyed by the conveyance roller by driving the drive source is faster than a second conveyance speed at which the medium is conveyed by the pickup roller by driving the drive source, and when the medium is conveyed by both the conveyance roller and the pickup roller by driving the drive source, the medium is conveyed at the first conveyance speed, and the pickup roller receives a force from the medium as the medium is conveyed at the first conveyance speed so as to displace the rotating member from a state in which the abutted portion abuts on the abutment portion to a state in which the abutted portion is separated from the abutment portion.

According to the present aspect, when a medium is conveyed by both the conveyance roller and the pickup roller by driving the drive source, the medium is conveyed at the first conveyance speed, and the pickup roller receives a force from the medium as the medium is conveyed at the first conveyance speed, so that the rotating member is displaced from the state in which the abutted portion abuts on the abutment portion to the state in which the abutted portion is separated from the abutment portion. For this reason, it is possible to efficiently generate the time for waiting for the conveyance of the second medium when the second medium is conveyed following the first medium every time a medium is conveyed in the transmission interruption mechanism.

A medium conveying device according to a fifth aspect of the present disclosure is an aspect dependent on the fourth aspect includes a reception unit that receives an instruction to convey a medium. The pickup roller is configured to rotate in the first rotating direction by the abutted portion in

a state of abutting on the abutment portion after completion of execution of the conveyance instruction received by the reception unit.

According to the present aspect, after the execution of the conveyance instruction received by the reception unit is completed, the abutted portion is made to abut on the abutment portion to set the pickup roller in a state in which the pickup roller can be rotated in the first rotating direction. For this reason, it is possible to suppress the delay of the start of the conveyance by the pickup roller when the reception unit receives the next conveyance instruction every time the reception unit receives a conveyance instruction.

A medium conveying device according to a sixth aspect of the present disclosure is an aspect dependent on the fifth aspect is configured to continue the rotation of the pickup roller by driving the drive source after the trailing end of a last medium to be conveyed passes through a position at which conveyance can be performed by the pickup roller after completion of execution of the conveyance instruction received by the reception unit.

According to the present aspect, after completion of execution of the conveyance instruction received by the reception unit, the rotation of the pickup roller is continued by driving the drive source after the trailing end of the last medium to be conveyed passes the position at which conveyance can be performed by the pickup roller. Accordingly, with a simple configuration and simple control, it is possible to prevent the pickup roller from delaying the start of conveyance when the reception unit receives the next conveyance instruction every time the reception unit receives a conveyance instruction.

In a medium conveying device according to a seventh aspect of the present disclosure is an aspect dependent on any one of the first to sixth aspects, $L1/X \leq L2-L2/X$ . . . (1), where L1/X is an interruption distance of the pickup roller generated by the transmission interruption mechanism necessary when a conveyance distance between the pickup roller and the separation roller is L1, a peripheral speed of the conveyance roller obtained by driving the drive source is X1, a peripheral speed of the pickup roller obtained by driving the drive source is X2, and X1/X2 that is a reduction ratio between X1 and X2 is X, and L2−L2/X is an interruption distance of the pickup roller configured to be generated by the transmission interruption mechanism when a conveyance distance between a trailing end of the medium reaching a position at which the medium is conveyable by the conveyance roller and the pickup roller is L2.

According to this aspect, the interruption distance of the pickup roller that can be generated by the transmission interruption mechanism satisfies formula (1). With the configuration satisfying such a formula, since the succeeding second medium can be accurately conveyed by the pickup roller after the preceding first medium reliably passes through the nip point between the separation roller and the retard roller, it is possible to particularly effectively prevent the second medium from causing jamming near the nip point between the separation roller and the retard roller.

In a medium conveying device according to an eighth aspect of the present disclosure is an aspect dependent on any one of the first to seventh aspects, the power transmission mechanism includes a first gear provided at a rotating shaft of the pickup roller, a second gear provided at a rotating shaft of the separation roller, and a third gear which is engaged with the first gear and the second gear and to which a driving force from the drive source is transmitted.

According to the present aspect, the power transmission mechanism includes the first gear provided at the rotating shaft of the pickup roller, the second gear provided at the rotating shaft of the separation roller, and the third gear that engages with the first gear and the second gear and transmits a driving force from the drive source. With such a configuration, the power of the drive source can be transmitted to the pickup roller and the separation roller with a simple configuration.

Hereinafter, the present disclosure will be specifically described. First, an outline of an inkjet printer **1** which is a medium conveying device and also a recording device according to the present disclosure will be described with reference to FIGS. **1** to **7**. Hereinafter, the inkjet printer **1** is simply referred to as the printer **1**. Note that, hereinafter, the direction in which a medium M is conveyed may be referred to as "downstream" and the direction opposite thereto may be referred to as "upstream".

As shown in FIG. **1** and the like, the printer **1** includes an accommodation unit **2** that accommodates a medium M. A plurality of media M can be loaded in the accommodation unit **2**. In addition, in the printer **1** according to the present embodiment, a medium accommodation unit configured to accommodate the medium M can be additionally provided in a lower portion of the accommodation unit **2** but is not limited to such a configuration.

The printer **1** is provided with a pickup roller **10** that feeds the medium M stored in the accommodation unit **2** in a conveying direction A. A separation roller **11** is provided downstream of the pickup roller **10** in the conveyance path of the medium M. The medium M is conveyed in the conveying direction A toward the separation roller **11** by the pickup roller **10** and is then conveyed in the conveying direction A by the pickup roller **10** and the separation roller **11**.

Here, as illustrated in FIG. **1** and the like, a retard roller **12** is provided at a position facing the separation roller **11**. As described above, in the printer **1** according to the present embodiment, a plurality of media M can be stacked in the accommodation unit **2**. When a first medium M**1** which is the uppermost medium M stacked in the accommodation unit **2** is conveyed, a leading end Ma of a second medium M**2** is made to abut on the retard roller **12** so that the second medium M**2** conveyed subsequently to the first medium M**1** is not doubly fed. The first medium M**1** that has reached a nip point N**1** between the separation roller **11** and the retard roller **12** is conveyed in the conveying direction A by the pickup roller **10** and the separation roller **11**. However, the second medium M**2** is in a stopped state without being conveyed because the leading end Ma of the second medium M**2** abuts on the retard roller **12** and is separated from the first medium M**1**.

The pickup roller **10** and the separation roller **11** rotate in a first rotating direction C**1** when conveying the medium M. The conveyance speed of the medium M by driving the pickup roller **10** is the same as the conveyance speed of the medium M by driving the separation roller **11**. The pickup roller **10** and the separation roller **11** are connected via a plurality of gears to a motor **8** electrically connected to a control unit **7** having a CPU, a memory unit, and the like and are driven by the driving force of the motor **8**.

As shown in FIG. **1** and the like, the printer **1** has an intermediate roller **13** and two driven rollers **14** provided at positions facing the intermediate roller **13** on the conveyance path of the medium M. Similar to the pickup roller **10** and the separation roller **11**, the intermediate roller **13** is also connected to the motor **8** via a plurality of gears and the like. The leading end Ma of the media M conveyed in the conveying direction A by the pickup roller **10** and the

separation roller **11** reaches a nip point N**2** between the intermediate roller **13** and a first driven roller **14**A of the driven rollers **14**. Here, after the leading end Ma of the medium M reaches the nip point N**2**, the medium M is conveyed in the conveying direction A by the intermediate roller **13** and the first driven roller **14**A. That is, the nip point N**2** corresponds to a position at which conveyance can be performed by the intermediate roller **13**. Further, the leading end Ma of the medium M conveyed in the conveying direction A by the intermediate roller **13** and the first driven roller **14**A reaches a nip point N**3** between the intermediate roller **13** and a second driven roller **14**B of the driven rollers **14**. After the leading end Ma reaches the nip point N**3**, the medium is conveyed in the conveying direction A by the intermediate roller **13** and the two driven rollers **14**.

The intermediate roller **13** rotates in the first rotating direction C**1** when conveying the medium M. On the other hand, both the first driven roller **14**A and the second driven roller **14**B rotate in the second rotating direction C**2** when conveying the medium M. The conveyance speed of the medium M by driving the intermediate roller **13** is faster than the conveyance speed of the medium M by driving the pickup roller **10** and the separation roller **11**. Here, when the medium M to be conveyed faces both the pickup roller **10** and the separation roller **11** and is at the nip point between the intermediate roller **13** and the driven roller **14**, and when the medium M to be conveyed faces the separation roller **11** and is at the nip point between the intermediate roller **13** and the driven roller **14**, the medium M is conveyed at a conveyance speed by driving the intermediate roller **13**. That is, at these times, the pickup roller **10** and the separation roller **11** rotate in the first rotating direction C**1** while being pulled by the medium M as the medium M is conveyed at the conveyance speed by driving the intermediate roller **13** and rotate faster than the rotation by the driving force of the motor **8**.

As shown in FIG. **1** and the like, the printer **1** is provided with an insertion portion **3** into which the medium M can be manually inserted by a user. The media M inserted into the insertion portion **3** is conveyed in the conveying direction A at the nip point N**3** between the intermediate roller **13** and the second driven roller **14**B. Specifically, as illustrated in FIG. **1**, the medium M accommodated in the accommodation unit **2** is conveyed to the nip point N**3** in a conveying direction A**1** of the conveying direction A, and the medium M inserted into the insertion portion **3** is conveyed to the nip point N**3** in a conveying direction A**2** of the conveying direction A.

The medium M whose leading end Ma reaches the nip point N**3** is conveyed by the intermediate roller **13** toward a position facing a line head **6** provided in a head unit **5** that is provided downstream of the nip point N**3** in the conveying direction A. Conveyance roller pairs **9** are provided upstream and downstream of the head unit **5** in the conveying direction A. The conveyance roller pairs **9** include driving rollers driven by the motor **8** and driven rollers that are driven to rotate in contact with the driving rollers.

The medium M that receives the feeding force from the conveyance roller pairs **9** is sent to a recording position facing the line head **6**, which is an example of a recording unit. The line head **6** forms the head unit **5**. The line head **6** discharges ink, which is an example of liquid, onto the image forming surface of the medium M to perform recording. The line head **6** is an ink discharge head configured such that nozzles that discharge ink cover the entire region in a widthwise direction B and is configured as an ink discharge head configured to perform recording in the entire region in the widthwise direction B of the medium M without moving in the widthwise direction B. However, the ink discharge head is not limited to such a configuration and may be of a type that is mounted on a carriage and discharges ink while moving in the widthwise direction B. In addition, it is also possible to use a recording unit having a configuration other than the ink discharge head, such as a thermal transfer recording unit.

The medium M on which recording has been performed by the line head **6** is conveyed by the conveyance roller pairs **9** and is discharged to a discharge tray **4**. Note that there is no particular limitation on the configuration of the accommodation unit **2** that accommodates the medium M, the insertion portion **3** into which the medium M is inserted, and the discharge tray **4** on which the discharged medium M can be stacked. The accommodation unit **2** and the discharge tray **4** may be configured to stack a plurality of media M.

As described above, the printer **1** according to the present embodiment includes the accommodation unit **2** that accommodates a plurality of media including the first medium M**1** and the second medium M**2** conveyed following the first medium M**1**. The printer **1** further includes the pickup roller **10** that conveys the medium M accommodated in the accommodation unit **2** downstream in the conveying direction A, the retard roller **12** that is provided downstream of the pickup roller **10** in the conveying direction A and separates the medium M conveyed by the pickup roller **10**, the separation roller **11** that abuts on the retard roller **12** and conveys the medium M downstream in the conveying direction A, and the intermediate roller **13** as a conveyance roller that is provided downstream of the separation roller **11** in the conveying direction A and conveys the medium M downstream in the conveying direction A. In addition, the printer **1** includes the motor **8** that is a drive source for generating power for rotating the pickup roller **10**, the separation roller **11**, and the intermediate roller **13**. The printer **1** according to the present embodiment further includes a power transmission mechanism **100** that transmits power from the motor **8** to the pickup roller **10** and the separation roller **11** and a transmission interruption mechanism **101** that is provided in the power transmission mechanism **100** and interrupts the transmission of power to the pickup roller **10** during the transmission of power to the separation roller **11**. Hereinafter, the power transmission mechanism **100** and the transmission interruption mechanism **101** will be described in detail.

First, how the power transmission mechanism **100** and the transmission interruption mechanism **101** function in the printer **1** will be described first with reference to FIGS. **2** to **7**. FIG. **2** illustrates a state in which the pickup roller **10**, the separation roller **11**, and the intermediate roller **13** are driven in the printer **1** to convey the first medium M**1**, which is the first medium M, and illustrates a state in which the first medium M**1** is at a position facing the pickup roller **10** and is at any position from the nip point N**1** to the nip point N**3**. In the state of FIG. **2**, the pickup roller **10**, the separation roller **11**, and the intermediate roller **13** are rotated in the first rotating direction C**1** by driving the motor **8**. However, as described above, since the conveyance speed of the medium M by driving the intermediate roller **13** is higher than the conveyance speed of the medium M by driving the pickup roller **10** and the separation roller **11**, the medium M is conveyed at the conveyance speed by driving the intermediate roller **13**, so that the pickup roller **10** and the separation roller **11** are pulled by the medium M and rotated in the first rotating direction C**1**.

FIG. **3** illustrates a state in which the first medium M**1** is further conveyed in the conveying direction A following the state illustrated in FIG. **2** and illustrates a state at a moment when a trailing end Mb of the first medium M**1** has passed through the nip point N**1**. Here, after the state shown in FIG. **2**, only the separation roller **11** and the intermediate roller **13** are driven to convey the first medium M**1** by the action of the power transmission mechanism **100** and the transmission interruption mechanism **101**, and the transmission of power to the pickup roller **10** is interrupted. Specifically, the transmission interruption mechanism **101** interrupts the transmission of the power to the pickup roller **10** at least after the trailing end Mb of the first medium M**1** passes through the pickup roller **10** and until the trailing end Mb of the first medium M**1** passes through the nip point N**1**. The positions of the leading end Ma and the trailing end Mb of each medium M in the conveyance path can be grasped by a sensor (not illustrated) or the like.

Here, if the pickup roller **10**, the separation roller **11**, and the intermediate roller **13** continue to be driven even after the state illustrated in FIG. **3**, there is a concern that jamming may occur in a region R**1** between the pickup roller **10** and the separation roller **11** in the conveyance path of the medium M. FIG. **4** illustrates a state in which the first medium M**1** is further conveyed in the conveying direction A following the state illustrated in FIG. **2** using a printer **200** according to Reference Example 1 in which the power transmission mechanism **100** does not include the transmission interruption mechanism **101**. In the state illustrated in FIG. **2**, since the leading end Ma of the second medium M**2**, which is the second medium M, abuts on the retard roller **12**, if a conveyance force in the conveying direction A is applied to the second medium M**2**, bending or the like may occur near the leading end Ma in the region R**1**. Since the printer **200** according to Reference Example 1 does not have the transmission interruption mechanism **101** in the power transmission mechanism **100**, the pickup roller **10** rotates in the first rotating direction C**1** even after the trailing end Mb of the first medium M**1** has passed through the pickup roller **10** after the state shown in FIG. **2**, and hence a conveyance force in the conveying direction A is applied from the pickup roller **10** to the second medium M**2** after the trailing end Mb of the first medium M**1** has passed through the pickup roller **10**. For this reason, in FIG. **4**, bending occurs near the leading end Ma in the region R**1**, and jamming occurs.

On the other hand, FIG. **5** illustrates a state in which after the state illustrated in FIG. **2** and the trailing end Mb of the first medium M**1** has passed through the pickup roller **10**, the first medium M**1** is further conveyed in the conveying direction A so as not to cause jamming using the printer **201** according to Reference Example 2 in which the power transmission mechanism **100** does not include the transmission interruption mechanism **101**. More specifically, FIG. **5** illustrates a state at the moment when the trailing end Mb of the first medium M**1** passes through the nip point N**3** and a state immediately before the start of conveyance of the second medium M**2**. The printer **201** according to Reference Example 2 includes the power transmission mechanism **100** configured to individually drive the intermediate roller **13**, the pickup roller **10**, and the separation roller **11**. As illustrated in FIG. **5**, if the conveyance of the second medium M**2** is started after the trailing end Mb of the first medium M**1** passes through the nip point N**3**, the occurrence of jamming can be suppressed. However, if such a configuration is adopted, the distance between the trailing end Mb of the first medium M**1** and the leading end Ma of the second medium M**2** in the conveyance path becomes long. This increases the time required for the entire conveyance when the plurality of media M are continuously conveyed.

Therefore, in the printer **1** according to the present embodiment, as shown in FIG. **6**, following the state shown in FIG. **3**, after the trailing end Mb of the first medium M**1** passes through the nip point N**1**, the intermediate roller **13** is driven to convey the first medium M**1**, and the pickup roller **10** is driven to convey the second medium M**2**. In the state shown in FIG. **3**, since the driving of the pickup roller **10** is stopped, the occurrence of jamming is suppressed. Then, as shown in FIG. **6**, the power transmission mechanism **100** resumes the transmission of power to the pickup roller **10** after the trailing end Mb of the first medium M**1** passes through the nip point N**1**.

FIG. **7** illustrates a state in which, subsequent to the state illustrated in FIG. **6**, the intermediate roller **13** is driven to convey the first medium M**1** and the pickup roller **10** and the separation roller **11** are driven to convey the second medium M**2**. As described above, the conveyance speed (first conveyance speed) of the medium M by driving the intermediate roller **13** is faster than the conveyance speed (second conveyance speed) of the medium M by driving the pickup roller **10** and the separation roller **11**. Therefore, until the leading end Ma of the second medium M**2** reaches the nip point N**1**, the conveyance speed of the first medium M**1** is faster than the conveyance speed of the second medium M**2**. Accordingly, until the leading end Ma of the second medium M**2** reaches the nip point N**2**, a distance La between the trailing end Mb of the first medium M**1** and the leading end Ma of the second medium M**2** increases. However, in the printer **1** according to the present embodiment, the distance from the nip point N**1** to the nip point N**2** is adjusted such that the distance La that increases as the first medium M**1** and the second medium M**2** are conveyed in the state shown in FIGS. **6** and **7** becomes an optimum distance. For this reason, when a plurality of media M are continuously conveyed, it is also possible to suppress an increase in time required for the entire conveyance.

As described above, the printer **1** according to the present embodiment includes the transmission interruption mechanism **101** that interrupts the transmission of power to the pickup roller **10** during the transmission of the power to the separation roller **11**, and the transmission interruption mechanism **101** is configured to interrupt the transmission of the power to the pickup roller **10** after the pickup roller **10** conveys the trailing end Mb of the first medium M**1** in the conveying direction A. Accordingly, the printer **1** according to the present embodiment is a medium conveying device including the pickup roller **10**, the separation roller **11**, the retard roller **12**, and the intermediate roller **13** as a conveyance roller. However, even in the medium conveying device having such a configuration, it is possible to improve the conveyance performance when the second medium M**2** is conveyed following the first medium M**1**. This is because when the second medium M**2** is conveyed following the first medium M**1**, the second medium M**2** can be prevented from being conveyed by the pickup roller **10** before the trailing end Mb of the first medium M**1** in the conveying direction A passes through the nip point N**1** between the separation roller **11** and the retard roller **12**, and the second medium M**2** can be effectively prevented from causing jamming near the nip point N**1** between the separation roller **11** and the retard roller **12**.

In addition, the printer **1** according to the present embodiment is configured to include the motor **8** as a drive source which generates power for rotating the pickup roller **10**, the separation roller **11**, and the intermediate roller **13** and the

power transmission mechanism **100** which transmits the power to the pickup roller **10** and the separation roller **11**. With such a configuration, for example, the plurality of media M can be separated without switching the rotating direction of the motor **8**, and the distance La which is the interval between the first medium M**1** and the second medium M**2** in the conveying direction A can be narrowed. Since it is possible to continuously convey a large number of media M in a short time by narrowing the distance La, it is also possible to improve conveyance efficiency when a plurality of media M are conveyed.

As described above, the transmission interruption mechanism **101** of the printer **1** according to the present embodiment is configured to interrupt the transmission of power from the motor **8** to the pickup roller **10** until the trailing end Mb of the first medium M**1** exceeds the nip point N**1**, that is, until the separation roller **11** conveys the trailing end Mb of the first medium M**1**. In other words, after the separation roller **11** finishes conveying the first medium M**1**, the pickup roller **10** can convey the second medium M**2**. With this configuration, after the preceding first medium M**1** reliably passes through the nip point N**1**, the succeeding second medium M**2** can be conveyed by the pickup roller **10**. Accordingly, it is possible to particularly effectively prevent the second medium M**2** from jamming near the nip point N**1**.

Here, the specific configurations of the power transmission mechanism **100** and the transmission interruption mechanism **101** will be described with reference to FIGS. **8** to **14**. As illustrated in FIGS. **8** and **9**, the power transmission mechanism **100** of the printer **1** according to the present embodiment includes a gear **111** as well as a gear **121** and a gear **131** that engage with the gear **111**. As shown in FIG. **9**, the gear **111** is provided at a rotating shaft **110**, the gear **121** is provided at a rotating shaft **120**, and the gear **131** is provided at a rotating shaft **130**. The rotating shaft **110**, the rotating shaft **120**, and the rotating shaft **130** are all attached to a base portion **140** so as to extend in the widthwise direction B. The rotating shaft **120** also serves as a rotating shaft of the pickup roller **10**, and the rotating shaft **130** also serves as the rotating shaft of the separation roller **11**. The gear **111** is configured to be rotatable at least in the second rotating direction C**2** by receiving a driving force from the motor **8** via a gear (not illustrated).

As described above, the power transmission mechanism **100** of the printer **1** according to the present embodiment includes the gear **111** as the third gear engaged with the gear **121** as the first gear provided at the rotating shaft **120** of the pickup roller **10** and the gear **131** as the second gear provided at the rotating shaft **130** of the separation roller **11**. Here, the gear **111** is a gear to which the drive force from the motor **8** as the drive source is transmitted. With such a configuration, the power of the motor **8** can be transmitted to the pickup roller **10** and the separation roller **11** with a simple configuration.

As shown in FIGS. **8** and **9**, the transmission interruption mechanism **101** is provided in the power transmission mechanism **100**. As shown in FIGS. **10** and **11**, the power transmission mechanism **100** includes a gear **121** rotatable with respect to the rotating shaft **120**, a first rotating member **122** rotatable with respect to the rotating shaft **120**, a second rotating member **123** rotatable with respect to the rotating shaft **120**, and a third rotating member **124** provided with the pickup roller **10** and configured integrally with the rotating shaft **120**.

The gear **121** has a teeth portion **121***a* on the pickup roller **10** side in the widthwise direction B. In addition, the first rotating member **122** has a teeth portion **122***a* that is meshed with a teeth portion **121***a* when the gear **121** relatively rotates in the first rotating direction C**1** and is idle without being meshed when the gear **121** relatively rotates in the second rotating direction C**2**. In addition, the first rotating member **122** has a protruding portion **122***b* that protrudes toward the pickup roller **10** in the widthwise direction B. The protruding portion **122***b* has a wall portion **122***c* on the leading side in the first rotating direction C**1** and a wall portion **122***d* on the leading side in the second rotating direction C**2**. Note that the case in which the teeth portion relatively rotates in the second rotating direction C**2** includes the case in which the teeth portion relatively rotates in the second rotating direction C**2** due to the speed difference between the teeth portions although both rotate in the first rotating direction C**1**.

The second rotating member **123** has a protruding portion **123***a* protruding toward the gear **121** in the widthwise direction B. The protruding portion **123***a* has a wall portion **123***c* that abuts on the wall portion **122***c* of the protruding portion **122***b* when the first rotating member **122** rotates in the first rotating direction C**1** relative to the second rotating member **123** and has a wall portion **123***d* that abuts on the wall portion **122***d* of the protruding portion **122***b* when the first rotating member **122** rotates in the second rotating direction C**2** relative to the second rotating member **123**. In addition, the second rotating member **123** has a protruding portion **123***b* that protrudes toward the pickup roller **10** in the widthwise direction B. The protruding portion **123***b* has a wall portion **123***e* on the leading side in the first rotating direction C**1** and a wall portion **123***f* on the leading side in the second rotating direction C**2**.

The third rotating member **124** has a protruding portion **124***a* protruding toward the gear **121** in the widthwise direction B. The protruding portion **124***a* has a wall portion **124***b* that abuts on the wall portion **123***e* of the protruding portion **123***b* when the second rotating member **123** rotates in the first rotating direction C**1** relative to the third rotating member **124** and has a wall portion **124***c* that abuts on the wall portion **123***f* of the protruding portion **123***b* when the second rotating member **123** rotates in the second rotating direction C**2** relative to the third rotating member **124**.

Here, referring FIG. **11**, a gap G**1** is formed between the teeth portion **121***a* and the teeth portion **122***a*, a gap G**2** is formed between the wall portion **122***c* and the wall portion **123***c*, and a gap G**3** is formed between the wall portion **123***e* and the wall portion **124***b*. On the other hand, referring to FIG. **10**, the gap G**1**, the gap G**2**, and the gap G**3** are not formed. That is, the gap G**1** is maximized when the distance between the teeth portion **121***a* and the teeth portion **122***a* is maximized, the gap G**2** is maximized when the wall portion **122***d* and the wall portion **123***d* abut on each other, and the gap G**3** is maximized when the wall portion **123***f* and the wall portion **124***c* abut on each other. On the other hand, the gap G**1** becomes minimum (0) when the distance between the teeth portion **121***a* and the teeth portion **122***a* is 0, the gap G**2** becomes minimum (0) when the wall portion **122***c* and the wall portion **123***c* abut on each other, and the gap G**3** becomes minimum (0) when the wall portion **123***e* and the wall portion **124***b* abut on each other.

If any one of the gaps G**1**, G**2**, and G**3** occurs, at least one of the first rotating member **122**, the second rotating member **123**, and the third rotating member **124** idles, and the pickup roller **10** does not rotate even when the gear **121** is rotated in the first rotating direction C**1**. Accordingly, when the sum of the gap G**1**, the gap G**2**, and the gap G**3** is long, the interruption distance generated by the transmission interruption mechanism **101** is long, whereas when the sum of the

gap G1, the gap G2, and the gap G3 is short, the interruption distance generated by the transmission interruption mechanism **101** is short. The interruption distance corresponds to a distance by which the medium M can be conveyed in a state where the rotation of the pickup roller **10** is interrupted. Hereinafter, for example, an example of the movement of the transmission interruption mechanism **101** from a state in which the sum of the gap G1, the gap G2, and the gap G3 becomes maximum, for example, a state corresponding to when the rotation of the pickup roller **10** is interrupted during a period until the trailing end Mb of the first medium M1 passes through the pickup roller **10**, to a state in which the sum becomes minimum will be described with reference to FIGS. **12** and **13**. FIG. **12** illustrates a case in which no frictional force is generated between the rotating shaft **120** (the third rotating member **124**) and the gear **121**, the first rotating member **122**, and the second rotating member **123**. FIG. **13** illustrates a case in which a frictional force is generated between the rotating shaft **120** (the third rotating member **124**) and the gear **121**, the first rotating member **122**, and the second rotating member **123**.

The state on the upper left in FIG. **12** corresponds to FIG. **11** and represents a state in which the sum of the gap G1, the gap G2, and the gap G3 is maximum. When the gear **121** rotates in accordance with the driving of the motor **8** from this state, the state shifts to the state on the upper middle in FIG. **12**, and the gap G1 is closed. Thereafter, the state shifts to the state on the upper right in FIG. **12**, and the gap G2 is gradually closed. Subsequently, when the state shifts to the state on the lower left in FIG. **12**, the gap G2 is closed. The state further shifts to the state on the lower middle in FIG. **12**, and the gap G3 is gradually closed. Finally, the state shifts to the state on the lower right in FIG. **12** corresponding to FIG. **10**, and the gap G3 is also closed. When the gear **121** rotates along with the driving of the motor **8**, the order of closing of the gap G1, the gap G2, and the gap G3 is that the gap G1 is closed first, then the gap G2 is closed, and finally the gap G3 is closed.

The state on the upper left in FIG. **13** corresponds to FIG. **11** and represents a state in which the sum of the gap G1, the gap G2, and the gap G3 is maximum. When the gear **121** rotates in accordance with the driving of the motor **8** from this state, the state shifts to the state on the upper middle in FIG. **13**, and the gap G3 is closed. Thereafter, the state shifts to the state on the upper left in FIG. **13**, and the gap G3 is closed. Thereafter, the state shifts to the state on the lower left in FIG. **13** and the state on the lower middle in FIG. **13**, and the gap G2 is gradually closed. Finally, the state shifts to the state on the lower right in FIG. **13** corresponding to FIG. **10**, and the gap G2 is closed, and the gap G1 is also closed following the state of the gap G2.

As described above, the transmission interruption mechanism **101** of the printer **1** according to the present embodiment has the second rotating member **123** on the rotating shaft **120**. The pickup roller **10** has the wall portion **124***b* as an abutment portion. The second rotating member **123** has the wall portion **123***e* as an abutted portion. Here, the wall portion **123***e* of the second rotating member **123** abuts on the wall portion **124***b* by rotating in the first rotating direction C1 which is a rotating direction when conveying the medium M with respect to the rotating shaft **120** by the transmission of power from the motor **8**. On the other hand, the wall portion **123***e* rotates in the first rotating direction C1 at a rotation speed faster than the rotation in the first rotating direction C1 due to the transmission of power from the motor **8** as a result of the pickup roller **10** being pulled by the medium M or the like, that is, the wall portion **123***e* is separated from the wall portion **124***b* by receiving a force relatively in the second rotating direction C2. The transmission interruption mechanism **101** is configured to interrupt the transmission of power from the motor **8** to the pickup roller **10** while the wall portion **123***e* is displaced from the separated state with respect to the wall portion **124***b* as shown in FIG. **11** to the abutting state with respect to the wall portion **124***b* as shown in FIG. **10** as the second rotating member **123** rotates in the first rotating direction C1. With such a configuration, the printer **1** according to the present embodiment can easily form the transmission interruption mechanism **101** in a small size.

As described above, in the printer **1** according to the present embodiment, the first conveyance speed which is the conveyance speed when the medium M is conveyed by the intermediate roller **13** by driving the motor **8** is higher than the second conveyance speed which is the conveyance speed when the medium M is conveyed by the pickup roller **10** by driving the motor **8**. In the printer **1** according to the present embodiment, when the medium M is conveyed by both the intermediate roller **13** and the pickup roller **10** by driving the motor **8**, the medium M is conveyed at the first conveyance speed, and the pickup roller **10** receives a force from the medium M relatively in the second rotating direction C2 as the medium M is conveyed at the first conveyance speed, whereby the second rotating member **123** is displaced from a state in which the wall portion **123***e* abuts on the wall portion **124***b* to a state in which the wall portion **123***e* is separated from the wall portion **124***b*. For this reason, in the printer **1** according to the present embodiment, it is possible to efficiently generate the time for waiting for the conveyance of the second medium M2 when the second medium M2 is conveyed following the first medium M1 every time the medium M is conveyed in the transmission interruption mechanism **101**.

In other words, in the printer **1** according to the present embodiment, when the first medium M1 is conveyed in a state of being at the position facing the pickup roller **10** as well as at the nip point N1 and the nip point N2, the second rotating member **123** is displaced from a state in which the wall portion **123***e* abuts on the wall portion **124***b* to a state in which the wall portion **123***e* is separated from the wall portion **124***b*. In still another expression, in the printer **1** according to the present embodiment, when the first medium M1 is conveyed in a state of being at the position facing the pickup roller **10** as well as at the nip point N1 and the nip point N2, the state in which the sum of the gap G1, the gap G2, and the gap G3 is minimum shifts to the state in which the sum is maximum. Therefore, hereinafter, an example of the movement of the transmission interruption mechanism **101** from the state in which the sum of the gap G1, the gap G2, and the gap G3 is minimum to the state in which the sum is maximum will be described with reference to FIG. **14**.

The state on the upper left side in FIG. **14** corresponds to FIG. **10** and represents a state in which the sum of the gaps G1, G2, and G3 is minimum (0). From this state, when the first medium M1 is conveyed in a state where the first medium M1 is located at the position facing the pickup roller **10** as well as at the nip point N1 and the nip point N2, the pickup roller **10** is pulled by the first medium M1 and starts to rotate in the first rotating direction C1 by a rotation amount larger than the rotation amount based on the driving force of the motor **8** and shifts to the state on the upper middle in FIG. **14**, and the gap G3 starts to be formed. When the conveyance of the first medium M1 further proceeds in this state, the state shifts to the state on the upper right in FIG. **14**. The gap G3 then becomes wider, the wall portion

123*e* abuts on the wall portion **124***b*, and the gap G**3** becomes maximum. Thereafter, the state shifts to the state on the lower left in FIG. **14**, and the second rotating member **123** starts to rotate in the first rotating direction C**1**, whereby the gap G**2** starts to be formed. Subsequently, the state shifts to the state on the lower middle in in FIG. **14**, the wall portion **122***d* abuts on the wall portion **123***d*, and the gap G**2** becomes maximum. Finally, the state shifts to the state on the lower right in FIG. **14** corresponding to FIG. **11**, and the first rotating member **122** is pushed by the second rotating member **123** to rotate in the first rotating direction C**1** with respect to the gear **121**, thereby forming the gap G**1** between the teeth portion **121***a* and the teeth portion **122***a*. The formation order of the gap G**1**, the gap G**2**, and the gap G**3** may be different from that shown in FIG. **14**.

When the operation of the transmission interruption mechanism **101** illustrated in FIG. **14** is executed, the sum of the gaps G**1**, G**2**, and G**3** may be maximized after the last conveyance of the medium M corresponding to the end of the execution command of one recording operation, as expressed by the state on the lower right in FIG. **14** corresponding to FIG. **11**. However, in such a state, the start of the first conveyance operation of the medium M in response to the execution command of the next recording operation is delayed by the length of the interruption time corresponding to the maximum sum of the gaps G**1**, G**2**, and G**3**. Therefore, in the printer **1** according to the present embodiment, it is possible to close the gaps G**1**, G**2**, and G**3** by driving the motor **8** after the last medium M is conveyed.

From another point of view, as illustrated in FIG. **1**, the printer **1** according to the present embodiment includes a reception unit **20** that receives a recording operation execution instruction from a user, that is, a conveyance instruction of the medium M. After completion of the conveyance instruction received by the reception unit **20**, the printer **1** is configured to minimize the sum of the gap G**1**, the gap G**2**, and the gap G**3**, for example, by making the wall portion **123***e* abut on the wall portion **124***b*, so that the pickup roller **10** can immediately rotate in the first rotating direction C**1** in accordance with the next conveyance instruction. For this reason, in the printer **1** according to the present embodiment, it is possible to suppress the delay of the start of the conveyance by the pickup roller **10** when the reception unit **20** receives the next conveyance instruction every time the reception unit **20** receives a conveyance instruction.

More specifically, the printer **1** according to the present embodiment is configured to continue the rotation of the pickup roller **10** in the first rotating direction C**1** by driving the motor **8** after the trailing end Me of the last medium M to be conveyed passes through the position at which conveyance can be performed by the pickup roller **10** after completion of the execution of the conveyance instruction received by the reception unit **20** is finished. With such a configuration, with a simple configuration and a simple control, it is possible to prevent the pickup roller **10** from delaying the start of conveyance when the reception unit **20** receives the next conveyance instruction every time the reception unit **20** receives a conveyance instruction.

Next, a preferable length of the interruption distance formed by the sum of the gap G**1**, the gap G**2**, and the gap G**3**, that is, the interruption distance generated by the transmission interruption mechanism **101** will be described with reference to FIG. **15**. FIG. **15** illustrates a state in which the medium M having the smallest length in the conveying direction A usable in the printer **1** according to the present embodiment is being conveyed and a state in which the leading end Ma of the medium M in the conveying direction A is at the nip point N**2** of the intermediate roller **13** in accordance with the position at which the medium M can be conveyed by the intermediate roller **13**. In this case, as illustrated in FIG. **15**, the conveyance distance between the pickup roller **10** and the separation roller **11** is represented by L**1**, and the conveyance distance between the pickup roller **10** and the trailing end Mb of the medium M that has reached the position at which the medium M can be conveyed by the intermediate roller **13** is represented by L**2**. In addition, the peripheral speed of the intermediate roller **13** by driving the motor **8** (the conveyance speed when the medium M is conveyed by the intermediate roller **13**) is X**1**, and the peripheral speed of the pickup roller **10** by driving the motor **8** (the conveyance speed when the medium M is conveyed by the pickup roller **10**) is X**2**. X**1**/X**2** which is the reduction ratio between X**1** and X**2** is represented by X. When defined in this manner, the interruption distance L**1**/X of the pickup roller **10** necessary for suppressing jamming generated by the transmission interruption mechanism **101** and the interruption distance L**2**−L**2**/X of the pickup roller **10** that can be generated by the transmission interruption mechanism **101** when the conveyance distance between the trailing end Me of the medium M that has reached the position at which conveyance can be performed by the intermediate roller **13** and the pickup roller **10** is L**2** preferably satisfy formula (1) given below.

$$L1/X \leq L2-L2/X \quad (1)$$

By adopting a configuration that satisfies such a formula, it is possible to accurately convey the succeeding second medium M**2** by the pickup roller **10** after the preceding first medium M**1** reliably passes through the nip point N**1** between the separation roller **11** and the retard roller **12**. Therefore, by adopting the configuration that satisfies such a formula, it is possible to particularly effectively suppress occurrence of jamming of the second medium M**2** near the nip point N**1**.

For example, in the present embodiment, the conveyance distance L**1** is 25 mm, the usable medium M having the minimum length in the conveying direction A is L-size paper, and the conveyance distance L**2** in the case of using L-size paper as the medium M is 35 mm. The peripheral speed X**1** of the intermediate roller **13** is set to 500 mm/sec, and the peripheral speed X**2** of the pickup roller **10** is set to 250 mm/sec. Then, the reduction ratio X between the peripheral speed X**1** of the intermediate roller **13** and the peripheral speed X**2** of the pickup roller **10** is 500/250, that is, 2. In this case, the interruption distance L**1**/X of the pickup roller **10** required to suppress jamming generated by the transmission interruption mechanism **101** is 25/2 mm, that is, 12. 5 mm. On the other hand, the actual interruption distance L**2**−L**2**/X generated by the printer **1** according to the present embodiment is 35−35/2 mm, that is, 17.5 mm. Therefore, in the present embodiment, formula (1) given above is satisfied, and the interruption distance of the pickup roller **10** which can be actually generated by the transmission interruption mechanism **101** is longer than the interruption distance of the pickup roller **10** which is necessary for suppressing jamming caused by the transmission interruption mechanism **101**.

The present disclosure is not limited to each embodiment described above, many variations are possible within the scope of the present disclosure as described in the appended claims, and it goes without saying that such variations also fall within the scope of the present disclosure. For example, a plurality of members corresponding to the second rotating member **123** may be provided at the rotating shaft **120**. By

providing a plurality of rotating shafts **120** with members corresponding to the second rotating member **123**, it is possible to increase the interruption distance generated by the transmission interruption mechanism **101**. Further, for example, the present disclosure is not limited to the printer and may be applied to a conveying device in a scanner, an intermediate unit provided between various devices, a finisher, or the like.

What is claimed is:

1. A medium conveying device comprising:

an accommodation unit that accommodates a plurality of media including a first medium and a second medium conveyed subsequently to the first medium;

a pickup roller that conveys, downstream in a conveying direction, a medium accommodated in the accommodation unit;

a retard roller that is provided downstream of the pickup roller in the conveying direction and separates the medium conveyed by the pickup roller;

a separation roller that abuts on the retard roller and conveys a medium downstream in the conveying direction;

a conveyance roller that is provided downstream of the separation roller in the conveying direction and conveys a medium downstream in the conveying direction;

a drive source that generates power for rotating the pickup roller, the separation roller, and the conveyance roller;

a power transmission mechanism that transmits the power to the pickup roller and the separation roller; and

a transmission interruption mechanism that is provided in the power transmission mechanism and interrupts transmission of the power to the pickup roller during transmission of the power to the separation roller, wherein

the transmission interruption mechanism is configured to interrupt the transmission of the power to the pickup roller after the pickup roller conveys a trailing end of the first medium in the conveying direction.

2. The medium conveying device according to claim **1**, wherein the transmission interruption mechanism is configured to interrupt the transmission of the power to the pickup roller until the separation roller conveys the trailing end of the first medium.

3. The medium conveying device according to claim **1**, wherein the pickup roller includes an abutment portion, and the transmission interruption mechanism includes a rotating member that is provided at a rotating shaft of the pickup roller, is configured to rotate in a first rotating direction that is a rotating direction when a medium is conveyed with respect to the rotating shaft, includes an abutted portion configured to abut on and separate from the abutment portion and is configured to interrupt transmission of the power to the pickup roller while the rotating member rotates in the first rotating direction so as to be displaced from a state in which the abutted portion is separated from the abutment portion to a state in which the abutted portion abuts on the abutment portion.

4. The medium conveying device according to claim **3**, wherein a first conveyance speed at which the medium is conveyed by the conveyance roller by driving the drive source is faster than a second conveyance speed at which the medium is conveyed by the pickup roller by driving the drive source, and

when the medium is conveyed by both the conveyance roller and the pickup roller by driving the drive source, the medium is conveyed at the first conveyance speed, and the pickup roller receives a force from the medium as the medium is conveyed at the first conveyance speed so as to displace the rotating member from a state in which the abutted portion abuts on the abutment portion to a state in which the abutted portion is separated from the abutment portion.

5. The medium conveying device according to claim **4**, further comprising a reception unit that receives an instruction to convey a medium, wherein

the pickup roller is configured to rotate in the first rotating direction by the abutted portion in a state of abutting on the abutment portion after completion of execution of the conveyance instruction received by the reception unit.

6. The medium conveying device according to claim **5**, wherein rotation of the pickup roller is continued by driving the drive source after a trailing end of a last medium to be conveyed passes through a position at which the medium is conveyable by the pickup roller after completion of execution of the conveyance instruction received by the reception unit.

7. The medium conveying device according to claim **1**, $L1/X \leq L2 - L2/X$, where $L1/X$ is an interruption distance of the pickup roller generated by the transmission interruption mechanism necessary when a conveyance distance between the pickup roller and the separation roller is $L1$, a peripheral speed of the conveyance roller obtained by driving the drive source is $X1$, a peripheral speed of the pickup roller obtained by driving the drive source is $X2$, and $X1/X2$ that is a reduction ratio between $X1$ and $X2$ is X, and $L2 - L2/X$ is an interruption distance of the pickup roller configured to be generated by the transmission interruption mechanism when a conveyance distance between a trailing end of the medium reaching a position at which the medium is conveyable by the conveyance roller and the pickup roller is $L2$.

8. The medium conveying device according to claim **1**, wherein the power transmission mechanism includes a first gear provided at a rotating shaft of the pickup roller, a second gear provided at a rotating shaft of the separation roller, and a third gear which is engaged with the first gear and the second gear and to which a driving force from the drive source is transmitted.

* * * * *